Maricopa County Environmental Health Code

Maricopa County Environmental Services Department
1001 N. Central Avenue, Suite 401
Phoenix, AZ 85004-1944

July 22, 2015

Maricopa County

MARICOPA COUNTY ENVIRONMENTAL HEALTH CODE

CHAPTER I

GENERAL PROVISIONS

REGULATION 1. Definitions

The following definitions shall apply throughout this Environmental Health Code, unless a different meaning is clearly indicated by the context or is stated in another chapter.

a. "Approved" or "approval" means acceptable to the Department and so stated in writing.

b. "Board" means the Maricopa County Board of Supervisors.

c. "Board of Health" means the Board of Health of Maricopa County.

d. "Chairman" means the Chairman of the Maricopa County Board of Supervisors.

e. "Clerk" means the Clerk of the Maricopa County Board of Supervisors.

f. "Counsel" means an attorney licensed to practice law in the State of Arizona.

g. "County" means Maricopa County.

h. "Department" means the Maricopa County Environmental Services Department.

i. "Environmental Health Code" means all of the rules and regulations which are adopted by the Board of Health and the Board of Supervisors pursuant to A.R.S. 36-183.02 through 36-183.07, 36-184, 36-187(C), 11-251 Paragraphs 17 and 31, 11-251.05, 11-251.08, 49-106, and 49-107, and which remain in force.

j. "Environmental Health Officer" means the Director of the Maricopa County Environmental Services Department or his/her authorized Agents.

k. "Municipality" means an incorporated area within Maricopa County.

l. "Notice" means an enforcement Notice issued by the Environmental Health Officer.

m. "Parties" means the Defendant and the County.

n. "Permit" means a written permit to operate, issued by the Maricopa County Environmental Services Department.

o. "Person" includes any natural individual, firm, trust, partnership, association, institution, public body, corporation, or any other entity and includes the plural as well as the singular, feminine as well as the masculine.

p. "Public Water System Site" means the location where an actual or planned potable water system structure or set of structures are or will be operated and maintained by a public water system. Typical structures at a drinking water system site may include, but are not limited to, wells, treatment facilities, chlorinators, storage tanks, and pressure regulating facilities. Distribution system appurtenances, such as valves, fire hydrants, sampling ports, meters, service lines, and piping, may be a part of a drinking water system site, but do not in themselves constitute a drinking water system site.

q. "Regulation" means the regulations in this Environmental Health Code and the regulations of the Arizona Departments of Health Services and Environmental Quality.

REGULATION 2. Purpose

The rules and regulations adopted and contained herein, and the enforcement thereof by the Department, are designed and intended to provide minimum standards for the protection of the health of the people of Maricopa County and to prevent the creation or maintenance of unhealthful, unsanitary conditions or public health nuisances, and shall be liberally construed to accomplish these purposes.

REGULATION 3. Responsibilities - Right of Inspection

a. The owner, person in charge of control, lessee, tenant, and occupant of every building, establishment, premises, place, potable water supply, sewage works, sewerage, drainage, or wastewater reclamation system has the duty to take all necessary, reasonable and usual precautions to keep, place and preserve the same in such condition, and to conduct and maintain the same in such manner, that it shall not be dangerous or deleterious to the public or in violation of the rules and regulations in this Environmental Health Code or the regulations of the Arizona Departments of Health Services and Environmental Quality.

b. No person shall refuse to allow the Department to inspect fully any and all premises or facilities at any reasonable time, and no person shall molest or resist the Department in the discharge of its duties whether in inspections for application approval or for the enforcement of this Environmental Health Code.

REGULATION 4. Permits, Service and Other Requirements

a. No person shall conduct an operation or operate an establishment for which a permit is required without holding the necessary and valid permit to do so, unless otherwise specified in this Environmental Health Code.

b. Permit application shall be made on forms provided by the Department and shall be completed in all pertinent details.

c. (1) No application for permit shall receive approval and no permit shall be issued and no facility for which a permit is required shall be placed in operation until the applicant demonstrates to the Department full compliance with the provisions of this Environmental Health Code, unless otherwise specified in this Environmental Health Code.

(2) The Environmental Health Officer may refuse to issue a permit to any person if the person fails to demonstrate sufficient reliability, expertise, integrity and competence to fulfill the requirements for permit and comply with applicable rules and regulations of this Environmental Health Code.

d. Any person denied a permit based on Regulation 4.c.(2) of this Chapter may exercise the following options:

(1) Request, in writing, that the Environmental Health Officer specify conditions necessary to provide reasonable assurance that full compliance with provisions of this Environmental Health Code will be achieved. The Environmental Health Officer within five (5) working days of the request shall specify said conditions; or

(2) Request in writing a hearing before the Environmental Health Officer as specified in Chapter I, Regulation 6.

e. In cases where the Department requires the submission of plans and specifications, no person shall commence construction unless the required plans have been approved. It shall be the full responsibility of said person that construction is in conformance with the approved plans and specifications.

f. The approval of plans and specifications shall lapse and become invalid one year from the date of approval unless a substantial portion of the work described in the plans and specifications has commenced by such anniversary date.

An approval of plans and specifications can be renewed for one year if an application for renewal is submitted within 180 days prior to expiration and a fee

equal to one-half (1/2) of the flat fee or initial plan review fee is paid. The approval will be effective for one year from the date of expiration.

g. (1) Permits are valid for one calendar year from the initial issue date unless revoked by the Department. All permit fees are nonrefundable.

(2) Annual permit fees are due on the date the permit expires. If the annual permit fee is not paid on or prior to the due date, the permit shall be automatically extended for 30 days on the condition the annual permit fee and a permit reinstatement fee are paid within 30 days after the date the permit expired. If the permit holder fails to pay the annual permit fee and the permit reinstatement fee within the 30-day extension period, the permit shall be deemed expired and void. Each establishment, premises or vehicle that has not paid the annual permit fee and reinstatement fee within the 30-day extension period, shall immediately cease operating and may apply for a new permit pursuant to Regulation 4 of this chapter.

(3) A permit reinstatement fee becomes due for failure to pay the permit fee within one calendar month of the permit fee due date.

h. No permit is transferable from person-to-person or place-to-place.

i. Each permit certificate shall be kept at the establishment, premise or designated vehicle and displayed in a conspicuous place designated by the Department. Where practicable, permits shall be framed and protected against damage and abuse.

j. Permit fees are nonrefundable.

REGULATION 5. Fees

a. No permit shall be issued, and no permit is valid, until the permit fee is received by the Department, except that the operator of a charitable nonprofit establishment (which operates to provide relief solely for the poor, distressed or under-privileged) may apply to the Board of Health for a waiver of permit fee. A waiver of fee may be granted only to the operator of an establishment, which maintains a current 501(c)(3) tax exempt designation from the Department of the Treasury, Internal Revenue Service, who demonstrates to the Board of Health that payment of said fee will cause financial hardship. Board of Health granted fee waivers expire pursuant to the required permit listing in section c. of this regulation. Application for a permit fee waiver shall be made using forms provided by the Department.

(1) A waiver of fees associated with the administering and issuance of a food service worker card in compliance with A.R.S. § 41-1080, may be granted to the operator of an establishment, which maintains a current 501(c)(3) tax exempt designation from the Department of the Treasury, Internal

Revenue Service and must demonstrate to the Board of Health that payment of said fees will cause financial hardship.

(2) Or to a current student, enrolled in a K-12 culinary arts school program or other similar curriculum based programs requiring a food service worker card from their students to be in compliance with this code. The sponsoring school district must demonstrate to the Board of Health that payment of said fee will cause financial hardship.

b. Investigation Fees:

If any work for which a permit is required has been commenced without first obtaining said permit, a special investigation shall be made before a permit may be issued for such work. An investigation fee, in addition to the permit fee, shall be collected whether or not a permit is then or subsequently issued. The fee shall be calculated at a rate of $130.00 per hour. The payment of such investigation fee shall not exempt any person from compliance with all other provisions of the Environmental Health Code or the regulations of the Arizona Department of Health Services or Arizona Department of Environmental Quality or from any penalty prescribed by law.

c. Plan Review Fees:

Plan review fees shall be determined based on a flat fee or an initial fee plus an hourly rate.

(1) Where it applies, if the actual cost of processing the application for a plan review is greater than the initial fee, the Department shall send the Applicant a final itemized bill for the difference between the initial fee and the actual cost of processing the application except that the final bill shall not exceed the applicable maximum fee. Such a difference shall be paid in full before issuance of the permit.

(2) In determining a flat fee or an hourly rate for services, the fee shall not exceed the reasonable cost of providing the services required as established by A.R.S. § 36 187.C.2.

(3) From the effective date of this regulation the hourly rate shall be $130.00 dollars per hour based on the Department's cost for a full fiscal year. Expedited, design/build and phased plan reviews shall be assessed at two times the flat fee or hourly rate. The Board of Supervisors may amend the flat fee or hourly rate annually.

d. Fee Schedule: Fees shall be paid according to the following table:

CHAPTER I
MARICOPA COUNTY ENVIRONMENTAL HEALTH CODE – FEE SCHEDULE

Effective August 1, 2010

ENVIRONMENTAL HEALTH DIVISION

Food Environmental Health Operating Permits	Permit Subtype	1 Year Fee
Adventure Food Service	Class 4	$585.00
Bakery	Class 2	$310.00
Bakery (School)	Class 2	$245.00
Boarding Home	Class 2	$275.00
Boarding Home	Class 5	$760.00
Bottled Water and Beverage Plants	Class 2	$305.00
Damaged Food	Class 4	$620.00
Daycare Foodservice	Class 3	$390.00
E&D 0-9 Seating	Class 2	$260.00
E&D 0-9 Seating	Class 3	$455.00
E&D 0-9 Seating	Class 4	$695.00
E&D 0-9 Seating	Class 5	$610.00
E&D Adult Daycare	Class 3	$100.00
E&D Assisted Living	Class 5	$670.00
E&D Hospital Food Service	Class 5	$1,010.00
E&D Jail Food Service	Class 5	$1,030.00
E&D Nursing Home	Class 5	$690.00
E&D School Foodservice	Class 2	$285.00
E&D School Foodservice	Class 3	$515.00
E&D School Foodservice	Class 4	$735.00
E&D Senior Food Service	Class 3	$475.00
E&D Service Kitchen	Class 2	$230.00
E&D 10+ Seating	Class 2	$315.00

Food Environmental Health Operating Permits	Permit Subtype	1 Year Fee
E&D 10+ Seating	Class 3	$650.00
E&D 10+ Seating	Class 4	$1,030.00
E&D 10+ Seating	Class 5	$1,020.00
Food Bank	Class 2	$260.00
Food Catering	Class 5	$530.00
School Food Catering	Class 5	$465.00
Food Jobber	Class 2	$255.00
Food Jobber School	Class 2	$255.00
Food Peddler	Class 2	$120.00
Food Production	Class 2	$260.00
Food Production	Class 4	$590.00
Food Production School	Class 2	$210.00
Food Production School	Class 4	$490.00
Ice Manufacturing	Class 2	$175.00
Itinerant (Temporary)		$85.00
Itinerant (Temporary) Late Fee Application Received <7 Days Prior to Event		Greater of $50 or 5% of permit fee charged
Meat Market	Class 4	$610.00
Micro Market	Class 1	$155.00
Mobile Food Unit	Class 4	$610.00
Pushcart	Class 3	$240.00
Refrigerated Warehouse/Locker	Class 2	$265.00
Retail Food Establishment	Class 3	$505.00
Retail Food Establishment	Class 2	$235.00
Seasonal Food Establishment	Class 2	$180.00
Seasonal Permit Late Fee Application Received <7 Days Prior to Event		Greater of $50 or 5% of permit fee charged
Vending Machines: 1-29 Units	Class 2	$220.00

Food Environmental Health Operating Permits	Permit Subtype	1 Year Fee
Vending Machines: 30-59 Units	Class 2	$220.00
Vending Machines: 60-89 Units	Class 2	$220.00
Vending Machines: 90 Or More Units	Class 2	$220.00
Commissary	Class 2	$1,020.00
Commissary	Class 4	$1,540.00

Food Environmental Health Operating Permits	Permit Sub Type	One Time Fee
Variance	Mobile Food Establishments	$60.00
Bare Hand Contact Exemption		$135.00
Variance	Eating and Drinking	$200.00
Inspection upon Request	Eating and Drinking	$240.00
New Permit Application Inspection	Eating and Drinking	$315.00
HACCP Plans		$205.00

Non-Food Environmental Health Operating Permits	Permit Subtype	1 Year Fee
Jail Complex		$1,085.00
Mobile Pet Shop		$20.00
Pet Shop		$70.00
Public Accommodations		$105.00
School Grounds		$185.00
Campground		$165.00

Food Service Licensing	Fee
Food Service Manager Card – Original Card	$5.00
Food Service Worker Card – Original Card	$5.00
Food Service Worker Card– Exam	$10.00 per exam attempt
Food Service Worker Card– Class	$10.00 per class attendance
Food Service Manager and/or Worker - Duplicate Card	$3.00

Environmental Health Plan Review	Subtype	Fee
Expedited Plan Review Fee (Requires prior administration approval) Two Times the fee for that Category		
Eating and Drinking Establishments	0-9 Seating Capacity	$545.00
All Other Food Establishments		$615.00
Micro Market Reference Plan		$270.00
Mobile Food Establishments		$75.00
Mobile Pet Groomer/Shop		$50.00

Environmental Health Plan Review	Subtype	Fee
Pet Shops		$520.00
Public Accommodations		$680.00
Pushcart Plan Review		$45.00
School Facilities	Food Service	$480.00
School Facilities	Non-Food	$640.00
Other Minor Review		$245.00
Micro Market Permit Processing Fee		$20.00

WATER & WASTE MANAGEMENT DIVISION

Water and Waste Management Division Operating Permits	
Drinking Water Operating Permits	**1 Year Fee**
Community Public Water System >100,001 Population	$3,925.00
Plus Each Well Site Addition	$270.00
Plus Each Treatment Facility Addition	$1,400.00
Community Public Water System 10,001 to 100,000 Population	$2,700.00
Plus Each Well Site Addition	$270.00
Plus Each Treatment Facility Addition	$1,350.00
Community Public Water System 1,001 to 10,000 Population	$2,000.00
Plus Each Well Site Addition	$270.00
Plus Each Treatment Facility Addition	$1,350.00

Drinking Water Operating Permits	1 Year Fee
Community Public Water System 101 to 1000 Population	$800.00
Plus Each Well Site Addition	$270.00
Plus Each Treatment Facility Addition	$1,350.00
Community Public Water System 25 to 100 Population	$300.00
Plus Each Well Site Addition	$270.00
Plus Each Treatment Facility Addition	$1,100.00
Non Community Public Water System > 1,000 Population	$700.00
Plus Each Well Site Addition	$270.00
Plus Each Treatment Facility Addition	$1,100.00
Non Community Public Water System 25 to 1000 Population	$250.00
Plus Each Well Site Addition	$270.00
Plus Each Treatment Facility Addition	$1,100.00
Water Transportation (Drinking Water Hauler)	$240.00 per unit

Solid Waste Operating Permits	Permit Subtype	1 Year Fee
Refuse Collection Variance Container Permit	1 to 25,000 Containers	$2,100.00
Refuse Collection Variance Container Permit	25,001 to 50,000 Containers	$4,000.00
Refuse Collection Variance Container Permit	50,001 to 100,000 Containers	$7,800.00
Refuse Collection Variance Container Permit	100,001 to 200,000 Containers	$15,500.00
Refuse Collection Variance Container Permit	200,001 to 300,000 Containers	$23,050.00
Refuse Collection Variance Container Permit	300,001 to 400,000 Containers	$30,700.00
Refuse Collection Variance Container Permit	400,001 to 500,000 Containers	$38,000.00
Refuse Collection Variance Container Permit	500,001+ Containers	$45,000.00
Chemical Toilet	1 through 99 units	$5.00 per unit
Chemical Toilet	100 through 199 units	$550.00
Chemical Toilet	200 through 349 units	$1,000.00
Chemical Toilet	350 through 499 units	$1,500.00
Chemical Toilet	500 through 999 units	$2,500.00

Solid Waste Operating Permits	Permit Subtype	1 Year Fee
Chemical Toilet	1000 through 1499 units	$4,500.00
Chemical Toilet	1500 through 1999 units	$6,500.00
Chemical Toilet	2000 through 2499 units	$8,000.00
Chemical Toilet	2500 through 2999 units	$ 10,000.00
Chemical Toilet	3000 through 3499 units	$12,500.00
Chemical Toilet	3500 through 3999 units	$14,500.00
Chemical Toilet	4000 through 4499 units	$17,000.00
Chemical Toilet	4500 through 4999 units	$19,500.00
Chemical Toilet	≥5000 and up units	$22,000.00
Non-Hazardous Liquid Waste Hauler		$175.00 per vehicle
Non-Hazardous Solid Waste Hauler		$120.00 per vehicle
Landfill		$450.00
Bio-Hazardous Medical Waste Hauler		$200.00 per vehicle

Swimming Pool Operating Permits	Permit Subtype	1 Year Fee
Bathing	Public	$365.00
Bathing	Semi-Public	$270.00
Hydrotherapy	Public	$235.00
Hydrotherapy	Semi-Public	$225.00
Special Use Pool	Public	$290.00
Special Use Pool	Semi-Public	$250.00
Wading Pool	Public	$235.00
Wading Pool	Semi-Public	$225.00
Inspection Upon Request	Swimming Pool Program	$135.00
Artificial or Semi-Artificial Bathing Lake		$375.00

Wastewater Treatment Operating Permits	1 Year Fee
Individual On-Site Treatment Plant	$100.00
Waste Treatment Works	$2,100.00
Reuse Facility	$300.00

Other Operating Permits	1 Year Fee
Mobile Home Park	$200.00

Water and Waste Management Division Plan Review	
Plan Review Hourly Rate	$130.00 per hour
Investigation Hourly Rate	$130.00 per hour

Plan Review Options: (requires approval prior to project submittal)

Expedited Plan Review – For plan review of a project that requires expediting.
Phased Plan Review – For plan review of a project where the design is executed in phases and requires multiple approvals to be issued.
Design/Build Plan Review — For plan review of a project that is executed using a design/build methodology.

An applicant may elect to have the project reviewed as an expedited and/or, if applicable, a phased or design/build plan review. Selecting an expedited, phased or design/build plan review option doubles the flat, initial and maximum fee amounts and the plan review hourly billing rate. Selecting an expedited plan review option in combination with a phased or design/build plan review option quadruples the flat, initial and maximum fee amounts.
The amount due when a project is initially submitted for review and approval is based on the fee item(s) flat/initial fee amount, the fee item quantities specified and the selected expedited, phased or design/build plan review options. For projects that include fee items with initial/maximum fees (i.e. billable projects), the maximum amount that may be charged for the project is based on the fee item(s) maximum fee amount, the fee item quantities specified and the selected expedited, phased or design/build plan review options.

Drinking Water Projects Plan Review	Flat or Initial Fee	Maximum Fee
Site Sampling Plan, Emergency Operations Plans, Backflow Prevention Plan or Other Public Water System Compliance Plans		
Community Water System		
25 to 100	$275.00	NA
101 to 1000	$350.00	NA
1,001 to 10,000	$350.00	NA
10,001 to 100,000	$350.00	NA
≥100,001 Population	$350.00	NA
Non Community Water System		
25 to 1000	$275.00	NA
≥ 1,001 Population	$275.00	NA
New Source Approval Water Quality Review and Report	$425.00	NA
Drinking Water System Compliance Review	$250.00	NA
Master Plan Review and Approval	$500.00	NA
Master Plan Amendment	$150.00	$1,500.00
Review of Plan for public water supply distribution line (including extensions) and associated appurtenances per group of 150 connections or less.	$600.00	NA

Drinking Water Projects Plan Review	Flat or Initial Fee	Maximum Fee
Water Booster Station	$675.00	NA
Storage Tank (atmosphere and/or pressurized)	$675.00	NA
Well Site Review and Approval	$675.00	NA
Disinfection System	$150.00	$1,500.00
Water Treatment Facility (Includes construction inspection) Treatment Facility >1.0 million gallons/day Treatment Facility 0.1 million gallons/day to 1 million gallons/day Treatment Facility <100,000 gallons/day	 $3,000.00 $1,500.00 $1,000.00	 $24,000.00 $15,000.00 $10,000.00
Other Construction Plan Review	$150.00	$1,500.00
Experimental Project Approval (Includes Four (4) Quarterly Inspections)	$300.00	$5,000.00
Water System Blending Plans	$150.00	$7,500.00
Other Operation Plan – Treatment Facility	$150.00	$1,500.00

Solid Waste Projects Plan Review	Initial Fee	Maximum Fee
Non-Hazardous Liquid Waste Transfer Facility	$150.00	$2,600.00
Solid Waste Variance Plan Review	$150.00	$1,560.00
Experimental Project Approval	$150.00	$10,400.00

Swimming Pool Projects Plan Review	Flat or Initial Fee	Maximum Fee
Swimming Pools/Special Use Pools		
≤ 1,000 sq. ft.	$770.00	NA
1,001-2,000 sq. ft.	$1,180.00	NA
2,001-9,999 sq. ft.	$2,205.00	NA
10,000 sq. ft.	$6,460.00	NA

Swimming Pool Projects Plan Review	Flat or Initial Fee	Maximum Fee
Swimming Pool Remodel		
Simple (no below grade plumbing changes)	$165.00	NA
Complex (includes below grade plumbing changes)	$440.00	NA
Swimming Pool Fence Remodel	$330.00	NA
Swimming Pool Pump Test Variance	$335.00	NA
Swimming Pool Variance	$200.00	NA

Wastewater Projects Plan Review	Flat or Initial Fee	Maximum Fee
Septic Tank Conventional Disposal less than 3000 gallons/day	$550.00	NA
On-Site Aerobic System with surface disposal	$1,050.00	NA
Composting Toilet less than 3000 gal/day	$400.00	NA
Septic tank with one Additional Alternative Element*	$1,050.00	NA
Each Additional Alternative Element* * These alternative disposal elements are all for systems of less than 3000 gal./day and include the following: Pressure distribution systems; gravel less trenches; natural seal evapotranspiration beds; lined evapotranspiration beds; Wisconsin Mounds: Engineered Pad Systems; Intermittent Sand Filters; Peat Filters; Textile Filters; Ruck® Systems; sewage vaults; aerobic systems/subsurface disposal; aerobic systems/surface disposal; cap systems; constructed wetlands; sand lined trenches; disinfection devices; sequencing batch reactors; subsurface drip irrigation systems.	$250.00	NA
On-site Wastewater Treatment Facility with flow from 3000 gal./day to less than 24,000 gal./day (non-aerobic)	$1,800.00	NA
On-Site System Site Inspection	$325.00	NA
Domestic Well Drill, Deepen, Replace or Modify (no inspection)	$175.00	NA
On-Site System Alteration Permit	$205.00	NA
On-Site System Alteration Permit & One Inspection	$400.00	NA
On-Site System Reconnect/Remodel Review	$205.00	NA
On-Site System Reconnect/Remodel Review & One Inspection	$400.00	NA

Wastewater Projects Plan Review	Flat or Initial Fee	Maximum Fee
On-Site System Plan Revision	$205.00	NA
On-Site System Request for Alternate Design, Installation, or Operational Feature	$75.00	NA
On-Site System Design Requiring Interceptor	$200.00/per interceptor	NA
On-Site System Transfer Ownership	$50.00	NA
On-Site System Abandonment/Closure	$175.00	NA
On-Site Additional Inspection	$325.00	NA
Planning & Development Plan Review	$80.00	NA
Master Plan Review and Approval	500.00	NA
Master Plan Amendment	$150.00	$1,500.00
Reclaimed Water System Plan Review	$150.00	$2,600.00
Sewer Collections Systems and Associated Appurtenances (includes extensions)		
Gravity Sewer Only, with Manholes		
Serving 50 or less Connections	$500.00	NA
Serving 51 to 300 Connections	$1000.00	NA
Serving 301 or more Connections	$1500.00	NA
Force mains Including Gravity Sewer Components		
Serving 50 or less Connections	$800.00	NA
Serving 51 to 300 Connections	$1,300.00	NA
Serving 301 or more Connections	$1,800.00	NA
Sewer Lift Station	$600.00	NA
Storage Tank (atmosphere and/or pressurized)	$675.00	NA
Disinfection System	$150.00	$1,500.00
Wastewater Treatment Facility (includes construction inspection)		
<100,000 gallons/day	$1,000.00	$10,000
0.1 million gallons/day to 1.0 million gallons/day	$1,500.00	$15,000
>1.0 million gallons/day	$3,000.00	$24,000

Wastewater Projects Plan Review	Flat or Initial Fee	Maximum Fee
Other Construction Plan Review	$150.00	$1,500.00
Non-Hazardous Liquid Waste Transfer Facility	$150.00	$2,600.00
Reclaimed Water Conveyance	$250.00	$3,000.00
Reclaimed Water Booster Station	$675.00	NA
Reclaimed Water Storage Tank (atmosphere and/or pressurized)	$675.00	NA
Ground Water Recharge	$250.00	$4,000.00
Reuse Facility	$250.00	$3,000.00
Experimental Project Approval (includes four (4) quarterly inspections)	$300.00	$5,000.00
MAG 208 Certification	$150.00	$5,000.00
Other Operational Plan – Treatment Facility	$150.00	$1,500.00

Sanitary Facilities for Infrastructure Plan Review	Flat or Initial Fee	Maximum Fee
Approval of Sanitary Facilities for a Subdivision per 150 lots or less.	$450	NA
Mobile Home Park Facilities per 100 leased spaces or less.	$600.00	NA
Review of on-site wastewater soils and hydrology report per 50 or less proposed lots (or 40 acres) whichever is the lesser in area.	$525.00	NA
Transfer of Ownership/Subdivision Name Change of Previously Approved Subdivision	$200.00	NA
Water or Wastewater Plan Review Waiver:	$150.00	$1,500.00
Review of entitlement plans submitted to the One Stop Shop process. The fee specified above applies to reviews of entitlement project submittals to ensure compliance with Maricopa County Environmental Health Code requirements for adequate potable water and management of sanitary sewage. This fee applies to preliminary plats, rezoning actions, comprehensive plan amendments, development master plans, special use permits and final plats.	$225.00	NA
Review of One Stop Shop process variance applications to ensure compliance with Maricopa County Environmental Health Code requirements for adequate potable water and management of sanitary sewage.	$25.00	NA
Review of One Stop Shop process temporary use applications (except special events) to ensure compliance with the Maricopa County Environmental Health Code requirements for adequate potable water and management of sanitary sewage.	$25.00	NA

All Other Water and Waste Management Fees	Fee
All Other Plans	Minimum $150.00, Maximum $2,080
Dye Test	$120.00
Observe Percolation Test	$150.00
Domestic Well Location Approval (ADWR Form)	$175.00

MARICOPA COUNTY ENVIRONMENTAL HEALTH CODE – CHAPTER I – FEE SCHEDULE

ALL OTHER ENVIRONMENTAL SERVICES CHARGES/FEES

All Other Environmental Services Charges/Fees	Charge/Fee
Permit Reinstatement Fee	Greater of $50 or 5% of amount due, charged on the day after permit expiration
Copy of Permit	$5.00
Photocopy	.25¢ per 8½" X 11" Sheet
Plan Reproduction	$6.00 per Sheet
Replacement Mobile Food Permit Plate	$5.00
Records Delivery	Shipping charge of carrier (USPS, FedEx, etc.)
Payment Returned/Declined (e.g. check returned, charge declined, etc.)	$35.00 per occurrence

REGULATION 6. Rejection of Application – Right to a Hearing

A person who has been denied a permit may within 15 days of notification thereof request a hearing before the Environmental Health Officer to show cause why a permit should be issued.

REGULATION 7. Suspension and Revocation of Permits

a. Suspension of Permit:

(1) When the Department determines that a permit holder has failed to comply with this Environmental Health Code or that there exists on the permitted premises an imminent health hazard, the Department may summarily and immediately suspend the permit without prior notice to the permit holder. Notice of the Suspension shall be served on the permit holder by personal

delivery or mailed by certified or registered mail, postage prepaid and return receipt requested, to the permit holder's last known address.

(2) Within fifteen days of being served with the Notice of Suspension, the permit holder may file a motion to vacate the suspension order with the Department and the Environmental Health Officer shall hear such motion within five (5) days. An order of summary suspension shall remain in effect for no more than 25 days. If the violation is not corrected within the 25 days, the Department may issue another suspension order.

(3) Upon suspension of the permit, the Department may close the permit holder's establishment, premises, or vehicle and the Department's red closed sign shall be posted on the establishment, premises, or vehicle and shall be clearly visible to the public. The premises shall remain closed and the sign shall remain in place until the violation is corrected, the order is modified or vacated by the Department, or the permit is revoked. The permit holder shall maintain the sign in an unobstructed manner in the location where the sign was posted.

b. Revocation of Permit:

(1) The Department may revoke a permit for two or more violations of this Environmental Health Code, for any violation that threatens the health or safety of the public, for the nonpayment of a fee or for any interference with the Department's performance of its duties, the inspection of an establishment, premises, or vehicle, or the enforcement of this Environmental Health Code.

(2) The Department shall serve written Notice on the permit holder or the person in charge stating the specific reason(s) for revoking the permit and that the permit will be revoked twenty (20) days after service of the Notice unless the permit holder files a written request for a hearing with the Department within the twenty (20) day notice period. If a request for a hearing is timely filed, the Environmental Health Officer or an independent Hearing Officer appointed by the Department shall hold a hearing as soon as practicable. After the hearing, the Environmental Health Officer shall revoke the Notice of Revocation and reinstate the permit, or revoke or modify the permit.

(3) Application for a new permit after revocation.

(a) After a permit is revoked, the former permit holder may submit a written application to the Department for a new permit and shall pay all applicable fees.

(b) The annual fee due date for the new permit shall be determined by the date the permit is issued by the Department.

(4) When a permit is revoked, the establishment shall cease to operate and the Department shall post the Department's red closed sign on the permit holder's establishment, premises or vehicle notifying the public that the establishment, premises or vehicle is closed. The red closed sign shall be posted on the establishment, premises, or vehicle and shall be clearly visible to the public. The premises shall remain closed and the sign shall remain in place until the Department determines otherwise. The permit holder shall maintain the closed sign and ensure that it is not tampered with, concealed, damaged, or otherwise removed without the Department's prior written authorization.

REGULATION 8. Notice to Appear

Peace officers and the Environmental Health Officer, shall have the authority to issue a Notice to appear under the same conditions and procedures as set for in A.R.S. §§ 13-3903 and 36-183.06 for any violation of this Environmental Health Code.

REGULATION 9. Service of Notice and Hearings

Unless otherwise provided in this Environmental Health Code, all Notices provided for in this Environmental Health Code are deemed served and received on the date the Notice is personally delivered to the permit holder, or on the date it is sent by registered or certified mail, return receipt requested, to the permit holder's last known address or to the address shown on the permit holder's driver's license. A copy of the Notice shall be filed in the Department's records.

a. A notice of the nonpayment of a fee is deemed served and received on the date it is sent by regular first class mail, postage prepaid, to the permit holder's last known address.

b. When a Notice is served on the permit holder, the Department may post the Department's yellow public Notice sign at the permit holder's establishment, premises or vehicle notifying the public that the establishment, premises or vehicle may not meet Maricopa County health standards or the permit holder failed to pay a fee required under this Environmental Health Code. If posted, the yellow public Notice sign shall be posted on the establishment, premises, or vehicle and shall be clearly visible to the public. The sign shall remain in place until the violation is corrected, the fee is paid, the Notice is revoked after a hearing, or removal is authorized by the Department.

c. Hearings

(1) Hearings held pursuant to this Environmental Health Code shall be conducted in the same manner as hearings are conducted pursuant to A.R.S. §§ 41-1061 to -1066.

(2) A Notice of a hearing from the Department to a permit holder shall include:

(a) A statement of the time, place and nature of the hearing.

(b) A statement of the legal authority and jurisdiction under which the hearing is to be held.

(c) A reference to the particular sections of the statutes and regulations involved.

(d) A short, plain statement of the matters asserted. If the Department is unable to state the matters in detail at the time the Notice is served, then the Notice may be limited to a statement of the issues involved. If the permit holder requests a more definite statement, the Department shall, if it is able, provide a more definite and detailed statement to the permit holder prior to the hearing.

REGULATION 10. Severability

Should any section, sentence, clause, phrase, or word of this Environmental Health Code be declared unconstitutional or invalid by a court of competent jurisdiction, the remainder of said Code shall not be affected thereby.

REGULATION 11. Violation

a. Violations of this Environmental Health Code may be redressed by proceedings pursuant to A.R.S. 36-601.B., 49-142 or 49-143; by injunctive relief in Superior Court; or by any other applicable remedies provided by law. In addition, persons who violate a provision of this Environmental Health Code are guilty of a Class 3 Misdemeanor if the person holds a valid permit or a Class 2 Misdemeanor if the person does not hold a valid permit under this article as provided in A.R.S. 36-183.03 and 36-191 and may be punished accordingly.

b. For purposes of determining the number of days of violation for which a civil penalty may be assessed under this code, if the Environmental Officer has notified the source of the violation and makes a prima facie showing that the conduct or events giving rise to the violation are likely to have continued or recurred past the date of Notice, the days of violations shall be presumed to include the date of such Notice and each day thereafter until the violator establishes that continuous compliance has been achieved, except to the extent that the violator can prove by a

preponderance of the evidence that there were intervening days during which no violation occurred or that the violation was not continuing in nature.

c. Notice under this section is accomplished by the issuance of a Cease and Desist Order, Notice of Violation, Permit Revocation, or by filing a complaint in Superior Court.

REGULATION 12. Cease and Desist; Abatement

When the Environmental Health Officer has reasonable cause to believe from information furnished to such officer or from investigation made by such officer that any person is maintaining a nuisance or engaging in any practice contrary to this code, he may forthwith serve upon such person by certified mail, in person or by designee a Cease and Desist Order requiring the person, upon receipt of the order to cease and desist from such act. The Department's red closed sign may be posted in a conspicuous place on the premises, clearly visible to the public, and will remain in place until removal is authorized by the Environmental Health Officer. It is the responsibility of the permit holder to maintain the sign in an unobstructed manner in the location where the sign was placed by the Environmental Health Officer. Within fifteen days after receipt of the order, the person to whom the order is directed may request a hearing. The Environmental Health Officer or his designee, within a reasonable time thereafter, shall hold a hearing, to determine whether the order is reasonable and just, and the practice engaged in is contrary to this code.

Upon the failure or refusal of a person to comply with the order of the Environmental Health Officer or if a person to whom the order is directed does not request a hearing and fails or refuses to comply with the Cease and Desist Order served under the provisions of this section, the Environmental Health Officer or his designee may file an action in the Maricopa County Superior Court restraining and enjoining the person from engaging in further acts. The court shall proceed as in other actions for injunctions.

REGULATION 13. Posting of Notices

The Environmental Health Officer may, for the purpose of notification to the public, post a warning sign at any premises or establishment describing the nature of legal action being taken against said premises or establishment under the provisions of the Environmental Health Code.

This sign will be posted in a conspicuous place on the premises, clearly visible to the public, and will remain in place until removal is authorized by the Environmental Health Officer. It is the responsibility of the permit holder and/or owner to maintain the sign in an unobstructed manner in the original location where the sign was placed by the Environmental Health Officer.

REGULATION 14. Nuisance Abatement Assessment and Lien

a. After the Department has completed the actions necessary to abate or remove a nuisance, source of filth or cause of sickness from private property pursuant to A.R.S. § 36-602(A), the Director may issue an Assessment Statement to the

owner of the property on which the nuisance, source of filth or cause of sickness was located.

b. The Assessment Statement shall include the following information:

(1) A description of the assessed costs incurred by the Department, which may include the actual costs of the abatement or removal action, incidental costs, personnel costs, attorney's fees and costs to obtain and execute an inspection and Abatement Warrant under A.R.S. § 36-603, and the costs of any additional inspections.

(2) Notice that the property owner shall pay the assessed costs within thirty days after service of the Assessment Statement, or by such other date as may be specified for payment in the Assessment Statement, unless the property owner requests an appeal pursuant to the subsection h. below.

(3) Notice that the property owner may appeal the assessment to the Maricopa County Board of Health in writing within thirty days after service of the Assessment Statement.

(4) Notice that failure to pay the Assessment Statement may result in a lien being recorded against the property on which the nuisance, source of filth or cause of sickness was located.

c. If the property on which the nuisance, source of filth or cause of sickness was located is not the property owner's residence or is vacant or unoccupied, the Assessment Statement shall be served on the property owner by personal delivery, left at the property owner's usual place of abode, served in a manner as provided for service of process under the Arizona Rules of Civil Procedure, or mailed by certified or registered mail, postage prepaid and return receipt requested, to the owner's last known address or to the address shown on the property owner's driver's license.

d. If the property on which the nuisance, source of filth or cause of sickness was located is the property owner's usual place of abode, the Assessment Statement shall be served on the property owner by personal delivery, left at the property, or served in a manner as provided for service of process under the Arizona Rules of Civil Procedure, or mailed by certified or registered mail, postage prepaid and return receipt requested, to the property.

e. If the Assessment Statement is served by being left at the property or at the property owner's usual place of abode, it may be left in any manner reasonably calculated to provide actual Notice to the property owner, including a door hanger, being taped to the front door, being placed in a mail slot or mail box, and being placed under a door mat.

f. Service of the Assessment Statement is effective and the time for the property owner to file an appeal commences on the date it is delivered to the property owner, left at the property or at the property owner's usual place of abode, or mailed by certified or registered mail as provided in subsections c. and d. above.

g. On the date the Assessment Statement is served on the property owner, or as soon thereafter as is practicable, the Department shall record a copy of the Assessment Statement in the office of the Maricopa County Recorder as constructive notice to all current and future lien holders of the property. The Assessment Statement shall clearly state that it is being recorded as a Notice and not as a lien. All persons who perfect a lien on the property and all persons who acquire title to the property after the Assessment Statement is recorded shall be subject to the Department's assessment claim against the property.

h. The property owner may appeal the Assessment Statement by filing a written request for a hearing to the Maricopa County Board of Health within thirty days after service of the Assessment Statement. A copy of the request for a hearing shall be delivered or mailed by certified or registered mail, postage prepaid and return receipt requested, to the Department. The request shall state the specific grounds for the appeal.

(1) After a hearing, the Board of Health may uphold, modify or revoke the Assessment Statement and shall sign a written order of its decision. The Department shall prepare a form of order for the Board of Health to sign.

(2) If the Board of Health upholds or modifies the Assessment Statement, the assessed costs shall be paid within thirty days of the Board of Health's decision, or by such other date as may be specified for payment by the Board of Health.

i. If the property owner fails to pay the assessed costs before the time for payment expires, the Department may record a Notice and Claim of Assessment Lien against the property on which the nuisance, source of filth, or cause of sickness was abated or removed. The Notice and Claim of Assessment Lien, from the date it is recorded in the Office of the Maricopa County Recorder, is a lien on the property until it is paid in full. The Notice and Claim of Assessment Lien relates back to and its priority is determined as of the date the Assessment Statement was recorded on the property as a Notice as provided in subsection g. above.

j. A Notice and Claim of Assessment Lien under this regulation is prior and superior to all other liens, obligations, Deeds of Trust, and other encumbrances on the property, except liens for general taxes and prior recorded mortgages.

k. The Department may bring an action to enforce the Assessment Lien in the Superior Court in the county in which the property is located at any time after the Assessment Statement is recorded. The failure to enforce the Assessment Lien by

bringing an action does not affect the lien's validity. The recorded assessment is prima facie evidence of the truth of all matters recited in the Assessment Statement and of the regularity of all proceedings before recording the Assessment Statement.

l. A prior assessment is not a bar to a subsequent assessment or assessments for and any number of Assessment Liens on the same property may be enforced in the same action.

m. A recorded Assessment Statement does not limit, restrict or otherwise affect the authority of the Department to undertake any additional enforcement action that is authorized by law, including applicable ordinances or regulations.

MARICOPA COUNTY ENVIRONMENTAL HEALTH CODE

CHAPTER II

SEWAGE AND WASTES

SECTION 1

GENERAL

REGULATION 1. Definitions

a. "Ashes" means any residue other than salvage from the burning of any combustible material.

b. "Certified water quality management plan" means a plan prepared by the designated water quality management planning agency pursuant to Section 208 of the Federal Water Pollution Control Act (P.L. 92-500) as amended by the Clean Water Act of 1977 (P.L. 92-217), adopted by the Water Quality Control Council, and certified by the Governor.

c. "Composting" means the biochemical degradation of organic materials to a stable, sanitary, nuisance-free, humus-like material.

d. "Designated management agency" means those entities designated in the certified water quality management plans to manage sewerage systems and sewage treatment works in respective areas.

e. "Disposal system" or "sewage works" means any system for the disposal of sewage and other wastes, either by surface or underground methods, including, but not limited to, individual sewage disposal systems, waste treatment works, privies, chemical toilets, incinerator toilets or privies, and public or franchised sewerage systems and wastewater reclamation systems.

f. "Effluent" means wastewater that has completed its passage through a wastewater treatment plant.

g. "Engineer" means the person or firm which designed the sewage works and conceived, developed, executed, or supervised the preparation of the plan documents.

h. "Facility plan" means the plans, specifications, and estimates for proposed sewerage systems and sewage treatment works prepared pursuant to Sections 201 and 203 of the Federal Water Pollution Control Act (P.L. 92-500) as amended by the Clean Water Act of 1977 (P.L. 92-217), and submitted to the Department by and for a designated management agency.

i. "Garbage" means swill and any accumulation of animal, vegetable and other matter that attends the preparation, handling, consumption, storage or decay of plant and animal

matter including meats, fish, fowl, birds, fruit, vegetable or dairy products and the waste wrappers or containers thereof.

j. "General plan" means a plan prepared by a responsible government entity.

k. "Hazardous waste" means any waste so defined by the provisions of A.A.C. Title 18, Chapter 8, Article 2.

l. "Human excreta" means human fecal and urinary discharges and includes any waste containing such material.

m. Industrial waste" means the liquid, gaseous, or solid wastes or combinations produced thereof as a result of any industrial operation.

n. "Manure" shall mean animal excreta, including cleanings from barns, stables, corrals, pens, or conveyances used for stabling, transporting, or penning of animals or fowl.

o. "Plan documents" means reports, proposals, preliminary plans, survey and basis of design data, general and detail construction plans, profiles, specifications, and all other information pertaining to sewage works planning.

p. "Pollution" means such contamination, or other alteration of the physical, chemical, or biological properties of any waters of the County, including change in temperature, taste, color, turbidity, or odor of the waters, or such discharge of any liquid, gaseous, solid, radioactive, or other substance into any waters of the County which will or is likely to create a public nuisance or render such waters harmful, detrimental, or injurious to public health, safety, or welfare, or to domestic, agricultural, commercial, industrial, recreational, or other beneficial uses, or to livestock, wild animals, birds, fish, or other aquatic life.

q. "Public sewer" means a sewer, located in a road, street, alley, easement, or right-of-way, used to convey sewage to community treatment and disposal facilities.

r. "Refuse" shall mean all putrescible and nonputrescible solid and semisolid wastes, including garbage, rubbish, ashes, manure, street cleanings, dead animals, abandoned automobiles, and industrial wastes, but not human excreta or sewage.

s. "Rubbish" means nonputrescible solid wastes excluding ashes, consisting of both combustible and noncombustible wastes, such as paper, cardboard, waste metal, tin cans, yard clippings, wood, glass, bedding, crockery, and similar materials.

t. "Service Area" means that geographic region specified for a designated management agency by the applicable certified water quality management plan or by a subsequent facility plan.

u. "Sewage" means the wastes from toilets, baths, sinks, lavatories, laundries, and other plumbing fixtures in residences, institutions, public and business buildings, mobile homes, watercraft, and other places of human habitation, employment or recreation.

v. "Sewerage system" means the pipeline or conduits, pumping stations, force mains, and all other structures, devices, appurtenances, and facilities used for collecting, or conducting wastes to a point of treatment and disposal.

w. A "dump" shall mean a place where refuse is disposed of on or in the ground in a manner other than that described in these regulations for a sanitary landfill.

x. "Treatment works" shall mean any treatment plant, disposal system, lagoon, or other works used for the purpose of treating, stabilizing, holding, or disposing of sewage or industrial wastes.

y. "Wastes" means sewage, industrial wastes, and all other liquid, gaseous, solid, radioactive, or other substances which may pollute or tend to pollute any waters of the County. The term "wastes" does not include agricultural irrigation and drainage waters, for which water quality standards shall have been established by the state.

z. "Wastewater" means sewage, and waterborne industrial wastes.

aa. "Wastewater Reclamation or Reuse System" means the wastewater treatment works and the entire Reuse/Reclamation and Distribution System for the use of reclaimed wastewater.

bb. "Waters of the County" means all waters within the jurisdiction of this County including all streams, perennial or intermittent, lakes, ponds, impounding reservoirs, marshes, watercourses, waterways, wells, springs, irrigation systems, drainage systems, and all other bodies or accumulation of water, surface and underground, natural or artificial, public or private, situated wholly or partly within or bordering upon the County.

cc. “Nonhazardous Liquid Waste” means human excreta and liquid or semi-solid wastes that include, but are not limited to, sludges, septic wastes, grease trap wastes, grit traps waste, wastewaters and other liquid wastes that do not contain hazardous wastes.

dd. “Nonhazardous Liquid Waste Transfer Facility” means a facility or any site owned, operated or utilized by any person where nonhazardous liquid waste is removed from containment and/or processed for the purpose of subsequent transfer or disposal of the waste.

REGULATION 2. General Provisions

a. All sewage, refuse, human excreta, and other wastes shall be kept, transported, treated, disposed of, or reclaimed by a method or methods which are in compliance with these regulations, and at sites which are approved by the Department.

(1) The owner, agent or occupant responsible for the sanitary condition of any place, premises, business establishment or industry shall handle, store and

dispose of all refuse accumulated there by approved methods; and any person handling, storing, transporting or disposing of garbage and rubbish or refuse shall do so in such a manner and by such means that it shall not be prejudicial to life or health for any reason including, but not limited to, the breeding of insects or harboring of rodents or the pollution of water. All hazardous waste shall, where necessary, be rendered harmless prior to collection and disposal.

b. Sewage, reclaimed wastewater, refuse, human excreta, or other wastes shall not be placed or deposited into any waters of the County or upon or under any land within the County, except as approved by the Department and in accordance with the provisions of the Arizona Administrative Code, Title 18, Chapter 9, Section C305 including all revisions, technical corrections, and supplements published as of November 12, 2005.

c. The owner of each device, method, or system used for the storage, collection, transportation and disposal of any waste material shall be responsible for the proper construction, maintenance, and operation of the facilities.

d. The design and location of any system of wastes storage, collection, transportation, or disposal shall take into consideration proximity to wells or other sources of water supply, topography, water table, soil characteristics, available area, etc., and shall provide for adequate handling, treatment and disposal facilities for the amount and nature of waste material anticipated.

e. No new refuse disposal site shall be established or operated, or any method for the disposal of refuse employed without approval and such approval shall be obtained prior to the start of operation.

f. No new open refuse dump, dumpsite or dumping area shall be started or maintained, nor shall any such refuse disposal operation be reinstituted after having once been discontinued.

g. No person shall install, permit to be installed, or maintain a cross connection, submerged inlet or similar connection between any part of a waste disposal or wastewater reclamation system and a potable water supply, in such manner that sewage, waste, or reclaimed wastewater may enter into or otherwise contaminate, the potable water supply.

h. Minimum design guidelines for sewage systems, including septic tank systems, and treatment works are found in the engineering bulletins of the Department, and Arizona Departments of Health Services and Environmental Quality.

i. No privy contents, drainage from a building, or the effluent from any waste treatment device shall be discharged into any well, either abandoned, or constructed for that purpose, that is carried to such a depth as to penetrate water bearing strata.

j. No privy contents, drainage from a building, or the effluent from any waste treatment device shall be discharged into any crevice, sinkhole, or other opening, either natural or artificial, or in a rock formation which will or may permit the pollution or contamination of ground water.

k. No boat, houseboat, or watercraft of any type, shall be equipped with a marine toilet so constructed and operated as to discharge any sewage directly or indirectly into the waters of the County, nor shall any container of sewage be placed, left, discharged, or caused to be placed, left, or discharged in or near any waters of the County by any person at any time.

l. Watercraft with marine toilets so constructed as to permit sewage to be discharged directly into the waters of the County shall be locked and sealed to prevent usage. Chemical or other type marine toilets with approved type storage containers shall be permitted where adequate, dockside disposal facilities are provided.

m. Dockside Facilities

(1) Every dock servicing watercraft shall have, conveniently located thereto, approved type toilet facilities for men and for women.

(2) Every dock servicing watercraft equipped with toilets shall provide approved sanitary facilities at dockside for the disposal of sewage from watercraft toilets.

n. The Environmental Health Officer shall be permitted to make and he shall make such inspections of any place, premises, container, process, equipment or vehicle used for the collection, storage, transportation, treatment, disposal or reclamation of sewage, industrial wastes or refuse as are necessary to insure compliance with these regulations.

o. Discontinued facilities.

(1) Every cesspool, septic tank and seepage pit and waste treatment works which has been abandoned or has been discontinued otherwise from further use or to which no waste or soil pipe from a plumbing fixture is connected, shall have the sewage removed there from and be completely filled with the earth, sand, gravel, concrete or other approved material.

(2) The top cover or arch over the cesspool, septic tank, seepage pit or waste treatment works shall be removed before filling and the cesspool, septic tank or seepage pit shall be filled to the level of the top of the ground.

(3) No person owning or controlling any cesspool, septic tank, or seepage pit on the premises of such person or in that portion of any public street, alley

or other public property abutting such premises, shall fail, refuse or neglect to comply with the provisions of this Section or upon receipt of notice so to comply from the department having jurisdiction.

(4) Where disposal facilities are abandoned consequent to connecting any premises with the public sewer, the permittee making the connection shall fill all abandoned facilities as required by the administrative authority within thirty (30) days from the time of connecting to the public sewer.

(5) Earth Pit Privies. Whenever any earthpit privy is discontinued, the pit shall be filled in and covered as outlined in Engineering Bulletin Number 2.

(6) Other facilities. Whenever any other type of privy, chemical toilet, method or system for storage or disposal of human excreta is discontinued, all excreta remaining shall be collected and disposed of in accordance with this article. All boxes, cans, and other receptacles from any discontinued privy, chemical toilet, method or system shall be disposed of in a manner that does not endanger the public health or create a nuisance.

REGULATION 3. Enforcement

Any person who violates any provision of this chapter is subject to the penalties provided by law.

REGULATION 4. Permit Required

No waste treatment works or wastewater reclamation system shall be operated or maintained in Maricopa County without a permit in force by the Department.

MARICOPA COUNTY ENVIRONMENTAL HEALTH CODE

CHAPTER II

SEWAGE AND WASTES

SECTION 2

SEWAGE AND WASTE TREATMENT WORKS

REGULATION 1. Approval to Construct

a. No person may begin construction of any Sewerage system, septic tank system, treatment works, Nonhazardous Liquid Waste Transfer Facility, reclamation system, or extensions of works or systems, or make any change that affects capacity, quality, flow, or location or operational performance of a system, and no person may install any process, device, or equipment, either in whole or in part, prior to receiving an "Approval to Construct" document from the Department. Application for an "Approval to Construct" shall be submitted to the Department at least 30 days prior to the date upon which Department approval is desired. For septic tank systems, the application shall be submitted at least 5 working days prior to the date upon which Department approval is desired.

b. All applicable fees must accompany the application.

c. All applications except those for septic tank systems shall be accompanied by the following plan documents in duplicate:

   (1) Prints or drawings of the work to be done. Sufficient detail shall be shown on the drawings to make clear to the Department the scope of the work.

   (2) Complete specifications to supplement the drawings.

   (3) Additional data as may be required by the Department.

d. The plan documents shall be accompanied by an engineering report, prepared by the design or consulting engineer which presents a description of the project together with all pertinent data upon which the design is based and other information necessary to permit a clear and full understanding of the work proposed to be undertaken.

e. All plan documents submitted to the Department, except septic systems less than 2,000 gallons per day, must have been prepared by, or under the supervision of a currently registered Arizona professional engineer. The engineer shall affix his signature and Arizona seal of registration to all plans submitted for approval and shall certify in writing that the plan documents comply with these regulations and in

principle with the criteria contained in the Engineering Bulletins. A non-registrant may design a wastewater treatment plant, or extensions, additions, modifications or revisions, or extensions to collection systems, if the total cost value of such construction does not exceed twelve thousand five hundred dollars, as cost estimate for material and labor shall be submitted with plan documents.

f. Plans and specifications submitted to the Department will be reviewed and, if found satisfactory, the Department will issue an "Approval to Construct". If construction has not substantially started within one year after the date of issuance of the "Approval to Construct", or if there is a halt in construction of more than one year, or if construction is not completed within three years after the date of issuance, the "Approval to Construct" will be void, unless an extension of time has been granted in writing by the Department.

g. All work shall conform to the approved plans and specifications. Should it be necessary or desirable to make any change in the design that will affect the capacity or sanitary features of the proposed work, revised plans and specifications, together with a written statement of the reasons for such change, shall be submitted to the Department for review, and approval shall be obtained in writing before the work affected by the change is undertaken. Structural changes, maintenance repairs, or minor revisions not affecting capacity, quality, flow, location, or operation are allowed during construction without further approval. A set of "as-built" drawings showing all changes made during construction shall be filed with the Department upon completion of the project as part of the required Approval of Construction package.

h. A sewage system owner shall notify the Department of the date when construction will begin on the sewage system, or of any change made which will affect capacity, quality, flow or operational performance of a sewage system, authorized by an "Approval to Construct", and of the date when installation of any process, device, or equipment authorized by an "Approval to Construct" will begin. Notification of completion of construction shall be given to the Department at least ten working days prior to the expected completion date to permit the scheduling of a final inspection. For a septic tank system, the notification shall be given at least five working days prior to the expected completion date.

i. The Department shall not issue approval for any sewerage system or waste and/or sewage treatment works which is not in conformance with the certified water quality management plan and facility plan that prescribes a particular sewerage system and waste and/or sewage treatment work configuration for sewage management by a designated management agency within a service area. If no facility plan is applicable, the certified water quality management plan shall be utilized by the Department to determine conformance.

j. The Department may issue an approval for a sewerage system or waste and/or sewage treatment works which is consistent with general plans prepared for an area when no sewerage system and waste and/or sewage treatment works configuration is prescribed in the certified water quality management plan. The Department shall confer with both the designated water quality planning agency for the area and the responsible and impacted governmental units to determine consistency with the general plans.

REGULATION 2. Final Approval of Construction

a. The Department must have approved construction prior to initial operation of any system approved for construction under Regulation 1 of this Section, except septic tank systems as specified in this regulation, or if interim Approval has been issued by the Department.

b. The following requirements shall be satisfactorily met before an approval of construction will be issued by the Department on a newly constructed, altered, or expanded sewerage system or waste and/or sewage treatment works**,** including wastewater reclamation systems, but excluding septic tank systems.

(1) A final inspection has been completed:

(a) By the Department; or

(b) With the approval of the Department, by a Registered Engineer; or

(c) With the Approval of the Department, by a registered landscape architect for reclaimed water distribution systems.

(2) An Operator, certified by the State of Arizona pursuant to A.A.C. R18-5-105, is employed to operate the Sewerage system or waste and/or Sewage Treatment Works pursuant to the General Requirements in A.A.C. R18-5-104 and in compliance with Chapter II, Section 9 of this Code.

(3) An Operation and Maintenance manual is submitted to and approved by the Department for newly constructed, altered, or expanded Sewerage Systems (except municipal collection systems) or waste and/or Sewage Treatment Works, including Wastewater Reclamation Systems, new sewage treatment systems, or substantial modifications thereto.

4) Construction generally conforms to the plans and specifications approved by the Department. A set of as-built drawings showing all changes made during construction shall be filed with the Department.

c. Approval of septic tank systems is regulated under Section 8 of this Chapter.

REGULATION 3. General Considerations

a. All sewerage and disposal systems and waste treatment works shall conform to the applicable general provisions relating to sewerage and waste disposal, listed in Section 1 of this Chapter, and to the specific provisions of this section.

b. Design, operation, and maintenance of sewerage systems shall be in general conformance with the criteria contained in Engineering Bulletin No. 11 and this Code.

c. Preliminary plans. Design or consulting engineers should confer with the Department before proceeding with detailed designs of major waste treatment works. It is advisable to submit, for preliminary consideration, tentative plans containing a general description of the existing or proposed plant, works, or systems, or proposed changes therein.

d. Tests and records. The owner or operator of each waste treatment works shall have equipment for and make such tests and keep such records as are necessary to assure efficient operation of the treatment works. Records of plant operation shall be transmitted to the Department monthly on forms approved by the Department and as it may specify.

e. Operation. All sewage and industrial waste treatment works shall be operated at their highest practical efficiency at all times. If, after investigation by the Department it is determined that any treatment or disposal works is causing unsatisfactory conditions in the waters or stream course or on or under any land into which the effluent is discharged, or is otherwise interfering with the legitimate uses of such waters or lands or is creating a nuisance or a menace to public health, the owner shall make such changes in the plant or its operation as are necessary to produce satisfactory results. These changes shall be made within such time limits as are set by the Department.

f. Inspection. Inspections of sewage and industrial waste treatment works and wastewater reclamation systems shall be made by personnel of the Department. Appropriate person or persons shall be notified of any unsatisfactory conditions with recommendations for corrections.

g. Approval required. No sewage or industrial waste treatment effluents shall be reclaimed without written approval from the Department. The reclamation of sewage or industrial waste treatment effluents for irrigation of crops used for human consumption, watering of cattle, full body contact, or drinking purposes is prohibited. A.A.C. Title 18, Chapter, 11, Sections 301 through 309 govern reuse of waste treatment effluent.

h. Bypassing of untreated sewage from sewage treatment systems is prohibited.

REGULATION 4 Separation of Water, Reclaimed Wastewater and Sewer Lines

a. In order to protect potable water systems from possible contamination, a sewer or reclaimed wastewater line shall not:

(1) Be installed within six feet of either side of a water line and shall not be above, at the same level as, or less than two feet below the bottom of the water line, unless extra protection is provided. Extra protection shall consist of constructing the sewer line with mechanical joint ductile iron pipe or with slip-joint ductile iron pipe if joint restraint is provided or shall consist of encasing both the water and sewer lines in at least six inches of concrete.

(2) Under any circumstances, infringe upon an area which is within two feet of either side of or two feet above the water line.

b. When unusual conditions, such as highway or bridge crossings, prevent a water line from being separated from sewer or reclaimed wastewater lines as required by subsection a above, the Department shall review and may approve requests for authorization to use alternate construction techniques, materials, and joints on a case-by-case basis. Requests for Approval of alternate construction techniques, materials, and joints shall be made in compliance with A.A.C. R18-9-A312.G.

c. No water line shall pass through, or come into contact with any part of a sewer manhole. The minimum horizontal separation between water lines and sewer manholes shall be six feet, measured from the center of the manhole.

d. The minimum separation between force mains or pressure sewers and water lines shall be two feet vertically and six feet horizontally under all conditions. Where a sewer force main crosses above, or less than six feet below, a water line, the sewer line shall be encased in at least six inches of concrete for 10 feet on either side of the water line.

e. Sewer lines (gravity, pressure, force) shall be kept a minimum of 50 feet from drinking water wells, unless the following conditions are met:

(l) Gravity sewers, pressure tested in place to 50 psi without excessive leakage, may be used at distances greater than 20 feet from drinking water wells.

(2) Sewage force mains and pressure sewers, pressure tested in place to 150 psi without excessive leakage, may be used at distances greater than 20 feet from drinking water wells.

f. No septic tank/disposal field system shall be constructed within 100 feet of a drinking water well.

g. All distances are measured horizontally from the outside of the pipelines.

h. Pipelines conveying a higher quality of water shall be located above pipelines conveying a lower quality of water. That is, potable water lines shall be installed above non-potable sewer lines, which shall be installed above reclaimed wastewater lines and reclaimed wastewater lines shall be installed above sewer lines. The decreasing quality order of pipeline is: potable water lines, non-potable water lines, reclaimed water lines, and sewer lines.

i. For the purpose of establishing separation when reclaimed wastewater lines are installed adjacent to potable water lines, the reclaimed wastewater system shall be considered a sewer.

j. For the purpose of establishing separation when reclaimed wastewater lines are installed adjacent to sewer lines, the reclaimed wastewater system shall be considered potable water.

k. Horizontal and vertical separations between potable water, non-potable water, reclaimed wastewater lines and sewer shall be in strict accordance with Engineering Bulletin No. 10 and this regulation.

l. These separation requirements do not apply to building plumbing or individual house service connections. These shall conform to the current Uniform Plumbing Code and/or Maricopa Association of Governments (MAG) Standards.

REGULATION 5. Minimum Requirements for Sewerage Systems

a. Sewerage Systems serving condominiums, mobile home parks, travel trailer parks, shopping centers, and recreational vehicle parks shall be designed in compliance with the Arizona Administrative Code, Title 18, Chapter 9.

b. For systems that treat, or which are designed to treat greater than 10,000 gallons/day, a standby power source shall be provided at all sewage treatment systems and/or pump stations where a temporary power failure may allow a discharge of raw or partially treated sewage. Standby power may be via a standby generator, separate feeders from separate substations, a loop feeder on separate transformers from a common substation, or a high-level alarm with portable generators. Standby power also shall be provided to any sewage treatment systems and/or pump stations, regardless of size, if a temporary power failure may allow a discharge into surface waters classified as "Unique Waters", by the Arizona Department of Environmental Quality.

c. The structures and electrical and mechanical equipment of sewage treatment systems and pump stations shall be protected from physical damage from a 100-year flood, if the plans for such were submitted for approval after the effective date of this Regulation. Flood protection shall be designed such that treatment works and pump stations will remain fully operational during a 25-year flood. Walls or berms of adequate size may be constructed where necessary to provide protection. Flood

protection approval must be obtained from the appropriate Flood Control District before an approval to construct will be issued.

d. All treatment works with greater than 100,000 gallons/day capacity shall be provided with the necessary equipment to indicate record and totalize the volume of wastewater being treated. T reatment plants with less than 100,000 gallons/day capacity are required to indicate flow.

MARICOPA COUNTY HEALTH CODE

CHAPTER II

SEWAGE AND WASTES

SECTION 3

REFUSE STORAGE

(NOTE: For manure and droppings, see Chapter XI)

REGULATION l. Storage of Refuse - General

Refuse shall be kept and stored so that it may not be readily scattered or become windblown, and where practicable, in durable containers. The owner, agent or occupant of every dwelling, business establishment, or other premise where refuse accumulates shall provide a sufficient number of suitable and approved containers for receiving and storing refuse and shall keep all refuse therein except as otherwise provided by this chapter.

REGULATION 2. Garbage Storage

a. Garbage and other putrescible material shall be stored:

(1) In rigid or semirigid, durable, liquid-tight containers constructed of metal or other easily cleaned material, provided with fly-tight covers which shall be removed only at times of filling, emptying, or cleaning. Soggy or wet garbage shall be wrapped or otherwise deposited in a condition which facilitates complete emptying of containers and prevents leakage of liquids. Containers shall be equipped with handles or bails which assist in lifting by the collecting agency for the purpose of removal and disposal of contents. Each container used at residences shall not exceed thirty gallon capacity excepting that where collection is made with mechanical lifters, appropriately larger containers may be permitted; or

(2) In containers of durable, pliable plastic, treated paper or similar materials of water-proof construction, approved by the Health Officer and kept closed by means which render the container liquid and fly-tight.

REGULATION 3. Condition of Containers

Containers shall be kept upon a well-drained base, and elevated from the ground where required. Containers intended for reuse shall be cleaned and freed of adhering materials after being emptied; and when in the opinion of the Health Officer are no longer fit for use, shall be replaced by the owner.

MARICOPA COUNTY ENVIRONMENTAL HEALTH CODE
CHAPTER II

SEWAGE AND WASTES

SECTION 4
REFUSE DISPOSAL

REGULATION 1. General Considerations

a. No garbage, rubbish, refuse or wastes, including oil and petroleum-based materials, may be placed or deposited on any alley, street, road, roadside, in any ditch, river, stream, lake, pond, canal, or on the banks thereof; or in any gulch, ravine, excavation or other place where it may be or may become a nuisance. This regulation shall not be construed to interfere with the approved placement of garbage, rubbish or refuse for collection purposes.

(1) The owner of real property on which solid wastes are located is responsible for complying with the provisions of this chapter even if the solid waste was placed on the property without the owner's knowledge or consent.

b. The disposal of large dead animals shall be by burial, cremation or rendering in an approved manner, or by other approved method.

c. The disposal of garbage by hog feeding is prohibited unless all refuse, rubbish and garbage associated with this method of disposal is stored, collected, transported and disposed of in compliance with the regulations in this Environmental Health Code. All remaining refuse, Rubbish and Garbage, including non-edible garbage, shall be collected and disposed of separately by methods approved by the Department.

d. Garbage Grinding: This method, involving the separate collection and disposal of garbage into a community sewerage system through commercial-type grinders, or mandatory community-wide installation of individual household grinders, will be acceptable to the Department provided that suitable means shall be provided for the disposal of all remaining refuse.

e. "Construction and Demolition Landfill" means a solid waste landfill that only accepts construction debris or demolition debris.

f. All refuse shall be disposed of by method or methods included in this Code, and shall include rodent, insect and nuisance control at the place or places of disposal. Approval must be obtained from the Arizona Department of Environmental Quality for all new disposal sites and changes in method of disposal prior to use.

g. "Construction Debris" means solid wastes derived from the construction, repair or remodeling of buildings or other structures.

h. "Demolition Debris" means solid wastes derived from the demolition of buildings or other structures.

REGULATION 2. Incineration

a. No person may dispose of refuse by incineration excepting in compliance with the regulations of this Environmental Health Code, applicable state law, and Maricopa County Air Pollution Control Regulations.

b. Incineration: Where incineration is to be employed, the plans and specifications, along with any other information necessary to evaluate the project, shall be submitted to the Arizona Department of Environmental Quality and approval received prior to construction. In addition, an approved method for the disposal of non-combustible refuse is required. Where incineration is proposed, the following items shall be provided:

(1) The capacity of the incinerator shall be sufficient for the maximum production of refuse expected.

(2) Non-combustible refuse shall be disposed by methods approved by the Department.

(3) Skilled personnel to assure the proper operation and maintenance of the facilities in a nuisance-free manner.

REGULATION 3. Reclamation

a. No person shall operate an establishment for the purpose of composting, processing or reclaiming refuse without a valid permit therefor.

b. Plans, specifications, and other information pertinent to the project shall be submitted to the Arizona Department of Environmental Quality for review and approval prior to the start of the project and no construction work shall commence until such approval has been obtained

c. c. That provisions are made for the proper disposal of all refuse not considered usable for composting.

d. d. Skilled personnel shall be provided to assure the proper disposal of all refuse not considered usable for composting.

REGULATION 4. Sanitary Landfill

a. Disposal of refuse on the ground shall be by the sanitary landfill method.

b. No person shall conduct, operate or maintain a sanitary landfill without a permit therefore or otherwise than in compliance with the regulations of this Code and of the Arizona Department of Environmental Quality.

c. Permit applications shall be made on forms supplied by the Arizona Department of Environmental Quality and shall be accompanied by plans showing the location, proposed extent and the type of landfill planned, local topography and land use, proposed final elevations and contours, access roads, depth to groundwater, proximity to surface water and drainage courses, and any additional information required by the Arizona Department of Environmental Quality to make clear the nature and scope of the work contemplated. The permittee shall:

(1) Provide for a sure and adequate access road to the site.

(2) Provide a semi-permanent, all-weather road on the site marked with appropriate directional signs, and where required, a vehicle turnaround to facilitate the orderly movement of vehicles and disposal of refuse.

(3) Take all necessary measures, including the erection of physical barriers, to prevent refuse from being windblown.

(4) As needed, clear trees, prevent intrusion by surface waters, and provide an adequate supply of cover material.

(5) Take all reasonable measures necessary to:

(a) prevent or eliminate the breeding or harborage of flies, mosquitoes, other insects, rodents or vermin, of public health importance;

(b) prevent and control fires or pollution of the air by dust, smoke, fumes, odor or from other causes;

(c) prevent the pollution of surface or groundwaters;

(d) prevent or eliminate any public health nuisance on the premises;

(e) provide and maintain effective supervision of the landfill and its operation. Such supervision shall extend over the physical limits of the project, including access roads.

d. The working face of the fill shall be kept as narrow as is consistent with proper containment of refuse, the operation of vehicles and equipment and to minimize the area of unprocessed, exposed waste material.

e. Waste materials may be ground and shall be mechanically compacted after depositing and before covering.

f. The exposed working surface shall be covered with clean earth as promptly as necessary for nuisance and fire control. At the close of each day's operations, both the surface and side slopes of the fill shall be completely covered to a depth of at least 6 inches.

g. Bulky materials, such as building rubble and tree stumps shall not be used for final surfaces or side slopes.

h. The final cover for surface and side slopes shall be maintained at a minimum depth of 24 inches.

i. Sufficient standby equipment shall be provided to prevent delay in compacting and covering due to emergencies, peak loads, or for other reasons.

j. Where a finished fill has a boundary side slope, the toe of the slope shall terminate in a filled ditch or other structure, designed to prevent raveling of the toe and slope.

k. Except for cases in which permission of the Bureau of Air Pollution Control is granted, all burning is prohibited.

l. After the active period of filling operations is completed, a maintenance program shall be continued so as to insure prompt repair of cracks, depressions, surface and side slope erosion until the fill has become stabilized.

m. The operator of the landfill shall be responsible for compliance with these regulations by scavengers and for their supervision.

n. The disposal of human excreta from septic tanks, cesspools, job toilets, and similar sources, and of dangerous or objectionable wastes, such as solvents, pesticides or other poisons and their container shall be conducted only with the special approval of the Department and only in an approved manner.

o. A variance from the daily compaction and covering requirements may be granted for sites serving less than 2,000 people by the Department of Environmental Quality upon submission of an acceptable plan approved by the Maricopa County Health Department demonstrating that no public health hazards or nuisance will exist. The variance will allow for compaction and cover every two weeks at sites serving less than 500 people, weekly compaction and cover for sites serving from 500 to l,000 people; and twice weekly compaction and cover for sites serving from 1,000 to 2,000 people. The variance may be revoked whenever the Department of Environmental Quality determines that the circumstances warranting the variance no longer exists.

MARICOPA COUNTY ENVIRONMENTAL HEALTH CODE
CHAPTER II

SEWAGE AND WASTES

SECTION 5

NON-HAZARDOUS SOLID WASTE COLLECTION AND DISPOSAL SERVICES

REGULATION 1. Permits

a. Non-Hazardous Solid Waste" means any garbage, trash, rubbish, industrial wastes, refuse, or other discarded material that does not contain hazardous wastes or is not classified as being exempt for the definition of solid waste pursuant to the Arizona Revised Statutes.

b. No person shall collect, haul, remove or dispose of non-hazardous solid waste as a function or service of their business/organization without a valid permit to do so.

c. All vehicles used for the storage, collection, transportation or disposal of non-hazardous solid waste as a function or service of their business/organization must have a valid permit to do so.

REGULATION 2. Vehicles

a. Vehicles used for the collection and transportation of refuse shall have securely covered watertight metal bodies of easily cleanable construction, shall be cleaned frequently enough to prevent their becoming a public health nuisance, and shall be maintained in good repair. Refuse storage compartments therein shall not be open or exposed excepting during filling, emptying and cleaning.

b. Vehicles shall be loaded and moved in such a manner that the contents are not exposed and do not fall, leak, spill or escape; and where spillage does occur, it shall be picked up immediately by the permittee and removed in a sanitary manner.

c. Each vehicle operated under permit shall have the permit number clearly inscribed on the side door panels and rear face thereof in 3-inch letters or numerals or both.

REGULATION 3. Refuse Containers

All refuse storage containers made available by a permittee under this section for public use other than those provided by a municipality shall be plainly and durably marked with the permittee's name and telephone number. Containers shall be of sufficient size and number to accommodate the service area, shall be emptied completely during the collection operation and where required, treated to prevent insect harborage or odor nuisance.

REGULATION 4. Frequency of Collection

a. The frequency of collection shall be in accordance with regulation of the collection agency but not less than that shown in the following schedules:

(1) Garbage only - twice weekly

(2) Refuse with garbage - twice weekly

(3) Rubbish and ashes - as often as necessary to prevent nuisances and fly breeding.

b. A variance from the required frequency rate may be granted to a person with more than five (5) permitted vehicles to allow for the collection of garbage once weekly. The variance may be granted by the Environmental Health Officer upon submission of an acceptable garbage collection frequency plan to the Department demonstrating that no public health hazards or nuisances will exist and that fly breeding will be controlled by either biological, chemical or mechanical means. All garbage collection frequency variance plans shall provide for random inspections by the Department of at least 1% of all garbage collection.

c. Variance requests pursuant to paragraph b. of this regulation shall be submitted to the Department on application forms approved by the Environmental Health Officer. An application shall not be complete until the applicant has paid the variance fee listed in chapter one of this Environmental Health Code.

d. A person requesting a variance, pursuant to paragraph b. of this regulation, shall give notice of the requested variance to each person whose refuse collection is proposed to be affected. Notices shall be in a form approved by the Environmental Health Officer, and shall describe the requested variance. Each notice shall be mailed or left at the residence or place of business of each person prior to the start of variance collection

e. The standard collection service set forth in this chapter prescribes a minimum level of service and does not preclude a waste collector from providing a higher level of service.

f. If the variance plan is found to be acceptable by the Environmental Health Officer, the Department will forward a copy of the plan to the Arizona Department of Environmental Quality (ADEQ). If approval of the variance plan is required by ADEQ, the Department may withhold its plan approval until written approval is obtained from ADEQ. If no approval of the variance plan is required from ADEQ, the Department will approve the plan and the approved variance plan shall become effective 30 days following Environmental Health Officer approval.

g. The variance may be revoked upon determination by the Environmental Health Officer that a public health hazard or nuisance exists or the facts do not support a variance.

REGULATION 5. Place of Collection

a. All refuse shall be properly placed on the premises for convenient collection as designated by the collection agency.

b. Where alleys are provided, collection shall be made on the alley side of the premises wherever feasible.

REGULATION 6. Collection Required

a. Where refuse collection service is available the following refuse shall be required to be collected: garbage, ashes, rubbish, and small dead animals which do not exceed 75 pounds in weight.

b. The following refuse is not considered acceptable for collection but may be collected at the discretion of the collection agency where special facilities or equipment required for the collection and disposal of such wastes are provided:

(l) Dangerous materials or hazardous substances, such as poisons, acids, caustics, infected materials, radioactive materials, and explosives.

(2) Materials resulting from the repair, excavation, or construction of buildings and structures.

(3) Solid wastes resulting from industrial processes.

(4) Large animals exceeding 75 pounds in weight, condemned animals, animals from a slaughterhouse, or other animals normally considered industrial waste.

(5) Manure.

REGULATION 7. Notices

a. All collection agencies shall provide each householder, or business establishment served, with a copy of the requirements governing the storage and collection of refuse, which shall cover at least the following items:

(1) Definitions.

(2) Places to be served.

(3) Places not to be served.

(4) Scheduled day or days of collection.

(5) Materials acceptable for collection.

(6) Materials not acceptable for collection.

(7) Preparation of refuse for collection.

(8) Types and sizes of containers permitted.

(9) Points from which collections will be made.

(10) Necessary safeguards for collectors.

b. All such notices governing storage and collection shall conform to these regulations.

REGULATION 8. Disposal

The permittee shall dispose of all non-hazardous solid wastes by an approved method and at an approved site. Such approval must be obtained in advance of the commencement of operations and prior to any change of method or site.

MARICOPA COUNTY ENVIRONMENTAL HEALTH CODE

CHAPTER II

SEWAGE AND WASTES

SECTION 6

CHEMICAL TOILETS, PORTABLE RESTROOM UNITS, PORTABLE WASTE HOLDING TANKS

REGULATION 1. Definitions

a. "Chemical toilet" means a toilet having a watertight, impervious pail or tank containing a chemical solution placed immediately beneath the seat or urinal and a p ipe or conduit connecting the riser with the tank.

b. "Portable restroom unit" means a trailer or skid-mounted temporary restroom facility that contains a toilet, urinal, hand washing sink, shower, and/or other sanitary fixture and includes an integral non-hazardous liquid waste holding tank or uses another approved waste storage or disposal method.

c. "Portable waste holding tank" means a watertight container installed above ground and used to collect non-hazardous liquid waste from temporary facilities, such as office trailers and temporary kitchens.

d. "Underground sewage vault" means a sealed chamber made of impervious material to temporarily store non-hazardous liquid waste.

REGULATION 2. General Provisions

a. The storage and disposal of human excreta shall be accomplished by one of the methods listed below, which are arranged in the order or priority in which they will be considered by the Department.

(1) A water closet connected to a public sewer.

(2) A water closet connected to an individual septic tank disposal system.

(3) Other, such as chemical toilets, portable restroom units, portable waste holding tanks, underground sewage vaults, etc., when approved by the Department.

b. The construction, operation, and maintenance of all chemical toilets, portable restroom facilities, portable waste holding tanks, and underground sewage vaults shall comply with the general regulations concerning sewage and waste disposal and with the specific provisions of this section. An application to construct or reconstruct an underground sewage vault shall also comply with the requirements of Section 8 of this Chapter and shall be submitted to the Department for approval prior to construction.

(1) Every chemical toilet, portable restroom unit, portable waste holding tank, and underground sewage vault shall be of approved construction and maintained in a sound, clean and sanitary condition, free of insects, vermin, over flowing leakage, and other unhealthful conditions. Suitable means shall be taken to effectively control black widow spiders and other poisonous insects.

(2) Chemical toilets, portable restroom units, portable waste holding tanks, and underground sewage vaults may be installed only:

(a) where connection to an approved sewage disposal system is impractical or impossible, or;

(b) where water under pressure is not available, or;

(c) where the installation of an individual sewage disposal system or other approved method of sewage or waste disposal is impractical or impossible, and;

(d) where its contents will not pollute, or tend to pollute, any water supply, potential water supply, swimming pool, or other bathing area, and;

(e) where it would not create a public health hazard or Public Health nuisance, and;

(f) if it complies with all the provisions of this code.

c. A portable restroom unit or portable waste holding tank may be installed as a temporary measure if a severe site or operational constraint prevents connection to a sewer or installation of another on-site wastewater treatment facility and the installation is serving temporary facilities. The Department may require the permit holder to remove portable restrooms or waste holding tanks from a location after two (2) years if the use is determined to be not temporary.

REGULATION 3. Reserved

REGULATION 4 Reserved

REGULATION 5. Required Toilet Facilities for Construction Sites and Public Gatherings

a. No person shall initiate or proceed with a construction, erection, alteration, repair, or razing project without first having provided an adequate number of suitable sanitary toilets for the use of persons on the project in a ratio of at least one (1) toilet per twenty (20) persons. Such toilets shall be of the water-flushed or chemical type approved by the department and located on or within two hundred (200) feet of each work area within the project site.

b At any public gathering for any commercial, religious, or public event where adequate permanent toilet facilities are not provided on the immediate premises as required by state law:

(1) Suitable approved toilet facilities of the water-flushed or chemical type adequate for the estimated attendance shall be located within two hundred (200) feet of such gathering, with the minimum of 1 toilet per 100 persons in attendance or as required by the Environmental Health Officer.

(2) The use of permanent off-site toilet facilities may be approved by the Department provided written permission has been obtained for such use from the owner of the toilets and provided that the public is permitted free and reasonable use of the facilities for the duration of the event. Directional signage to such off-site toilet facilities shall be provided at the event site.

REGULATION 6. Chemical Toilets, Portable Restrooms, and Portable Waste Holding Tanks

a. All chemical toilet installations shall comply with the general regulations concerning sewage and waste disposal and with the specific provisions of this section and as follows.

(1) Chemical toilets shall be of sanitary construction and maintained in a clean and sanitary manner. Toilet paper shall be available at all times.

(2) Chemical toilets shall not be installed within twenty (20) feet of occupied premises or within ten (10) feet of any public thoroughfare or sidewalk, unless authorized by the Department.

(3) The floors of chemical toilets shall be of smooth, finished, nonabsorbent material. Seats, walls, and ceilings shall be of smooth, easily cleanable, light-colored finish.

(4) Toilet facilities intended for male use shall include a urinal, installed at least twenty (20) inches from the toilet seat opening. The urinal shall be made of corrosion-resistant, impervious material finished with a smooth surface and sloped to facilitate cleaning and draining. A splash board of similar material at least nine (9) inches higher than the overflow rim shall be provided.

(5) In chemical toilets, seats shall be installed so as to ensure that wastes drop unimpeded or are flushed into a receiving tank. The receiving tank shall be of impervious, corrosion-resistant material with an easily accessible opening for cleaning. The tank shall be built of a material and thickness acceptable to and approved by the Department. Vent pipes in chemical toilets, when installed in the vertical tube forming the toilet bowl, shall be inserted at an angle not over thirty (30) degrees from the vertical to minimize clogging and corrosion.

(6) A solution of sodium hydroxide or other approved chemical shall be maintained in the tank or receiving element at a level that prevents septicity and the creation of objectionable odors.

(7) The contents of toilets shall be disposed of in an approved manner and location.

(8) All spills shall be cleaned up immediately by collecting spilled waste, removing and/or disinfecting contaminated soil, and disinfecting affected surfaces with a disinfecting solution. The owner shall maintain a record of all spills of over one (1) gallon for a period of one (1) year and provide the record to the Department for inspection upon request. The record shall include the date of the spill, date of clean up, location, name (event or business), address of the spill, estimated amount of spill, method of clean up, quality of material removed, and type and amount of disinfectant applied.

b. All portable restroom units and portable waste holding tanks shall comply with all regulations of this Code concerning sewage, waste disposal, and site sanitation, as well as the specific provision of this section.

(1) Portable restroom units and portable waste holding tanks shall be installed to allow unobstructed access for servicing equipment to remove waste.
(2) Waste holding tanks shall be structurally designed specifically for a waste holding tank application and constructed from corrosion resistant, leak free, durable material. The tank and all waste plumbing shall be ventilated to drain all fixtures and minimize objectionable odors.
(3) Portable restroom facilities shall be maintained in a clean and sanitary manner. Toilet paper shall be available at all times.
(4) Contents of waste holding tanks shall be disposed of by a vehicle that is permitted by the Department for non-hazardous liquid waste collection and transport.
(5) Waste holding tanks shall be emptied at a frequency to prevent overflowing, creation of an insanitary condition, a public health nuisance, and shall be maintained in good repair so as to prevent leakage of the contents onto the ground or any other surface.
(6) All spills shall be cleaned up immediately by collecting spilled waste, removing contaminated soil, and disinfecting affected surfaces with a disinfecting solution. The owner shall maintain a record of all spills for a period of three (3) years and provide the record to the Department for inspection upon request. The record shall include the date of the spill, date of clean up, location, name (event or business), address of the spill, estimated amount of spill, method of clean up, quantity of material removed, and type and amount of disinfectant applied.
(7) The floors of portable restroom units shall be of smooth, finished, nonabsorbent material. Seats, walls and ceiling shall be of smooth, easily cleanable, light-colored finish.
(8) Portable restroom facilities and portable waste holding tanks shall not be installed within twenty (20) feet of an occupied premises or within ten (10 feet of any public thoroughfare or sidewalk, unless authorized by the Department.

REGULATION 7. Permit Required

a. No person shall provide, for rent or hire, or install portable, nonpermanent chemical toilet facilities, portable restroom units, portable waste holding tanks, or an underground sewage vault unless the person holds a valid permit to do so.

b. Every chemical toilet structure shall have thereon in clear, easily readable letters the name and telephone number of the permit holder.

c. Each portable restroom unit and portable waste holding tank operated under an annual permit shall have thereon in clear, easily readable letters the name and telephone number of the permit holder.

d. Permit holders for chemical toilets, portable restroom units, and portable sanitary waste holding tanks shall make available for review upon request by the Department, a list of all deployed units, by type, address and number at each location.

e. No person shall install an underground sewage vault as specified in regulation 2 prior to Department plan approval, including payment of the plan review fee as specified for an onsite wastewater alternative system. Application and installation for an underground sewage vault shall meet the requirements of Chapter II Section 8 of this Code, including justification for installation of such a vault as a temporary facility. Operation shall not commence until the Department has approved the completed facility. The owner shall remove the facility within two (2) years, or apply for a new permit by submitting a new application and fee to the Department at least sixty (60) days prior to expiration of the prior permit's two (2) year duration.

MARICOPA COUNTY ENVIRONMENTAL HEALTH CODE

CHAPTER II

SEWAGE AND WASTES

SECTION 7

COLLECTION, TRANSPORTATION, AND DISPOSAL OF NONHAZARDOUS LIQUID WASTES

REGULATION 1. Permit Required

a. No person shall remove, store, transport, or dispose of any Nonhazardous Liquid Wastes without applying for and receiving a permit to do so.

(1) The design, construction and operation of vehicles used in the transportation of these wastes shall comply with the requirements of these regulations and no vehicle shall be so used without the approval of the Department.

(2) Each approved vehicle shall have the number assigned by the Department plainly and durably inscribed in contrasting colors on the side door panels of the cab and the rear face of the tank. Such numbers shall be legible at all times, and not less than 3 inches high.

REGULATION 2. Sanitation

a. The collection, storage, transportation, and disposal of Nonhazardous Liquid Wastes shall be carried out in an approved sanitary manner that minimizes exposure to flies and other insects, spillage, odor, and without causing other hazards or dangers to the public health. Nonhazardous Liquid Waste Transfer Facilities, excluding those co-located at facilities that hold a Wastewater Treatment Plant Permit, shall be designed to prevent emission of any offensive odor beyond the boundary of the facility, and shall not be operated in a way that emits any such odor on a persistent basis beyond the boundary of the facility.

b. No unclean vehicle or auxiliary equipment used for carrying, transporting, or handling the contents of septic tanks, cesspools, chemical toilets, sewage seepage pits, privies, or other Nonhazardous Liquid Wastes may stand or remain near any occupied structure without good cause. Such vehicles and equipment shall be loaded, unloaded, and transported through any street, place or premises in a reasonable period of time.

c. Each vehicle and all auxiliary equipment used for the transportation or handling of such wastes shall be liquid tight, gas tight, and structurally sound so that no

Wastes may spill or escape therefrom. Any wastes dropped or spilled shall be carefully cleaned up immediately and the areA properly disinfected.

d. Wastes taken from a septic tank, cesspool, chemical toilet, sewage seepage pit, or privy, and other Nonhazardous Liquid Wastes shall be disposed of only in a manner and at a place approved by the Department. This approval shall be obtained at the time the Permit is issued and no change to the manner or place of disposal shall be made without prior approval of the Department.

e. Tanks on such vehicles shall have a minimum capacity of 750 g allons, with the exception of tanks used exclusively for servicing chemical toilets which may be permitted by the Department to have a smaller capacity.

f. All vehicles, tools, and equipment shall be maintained in good repair at all times. At the end of each day's operation all containers, suction pumps, hose, and other tools and equipment shall be thoroughly cleaned and sanitized.

g. All portable containers, pumps, hose, tools, and other implements, when not in use, shall be stored within a covered and fly-tight enclosure.

h. No vehicle, tank, or equipment used in these operations shall be used to contain or transport water for potable purposes.

MARICOPA COUNTY ENVIRONMENTAL HEALTH CODE

CHAPTER II

SEWAGE AND WASTES

SECTION 8

ONSITE WASTEWATER TREATMENT FACILITIES

REGULATION 1. Definitions

a. "Aggregate" means a clean graded hard rock, volcanic rock, or gravel of uniform size, 3/4 inch to 2-1/2 inches in diameter, offering 30% or more void space, washed or prepared to be free of fine materials that will impair absorption surface performance, and has a hardness value of three or greater on the Moh's scale of hardness (can scratch a copper penny).

b. "Aquifer Protection Permit" means an individual or general permit issued under A.R.S. §§ 49-203, 49-241 through 49-252, and Articles 1, 2, and 3 of Title 18, Chapter 9.

c. "Aquifer Water Quality Standard" means a standard established under A.R.S. §§ 49-221 and 49-223.

d. Cesspool shall mean a securely covered pit with sturdy open-jointed lining into which raw sewage is discharged for final disposal by digestion or leaching into the surrounding porous soil.

e. "Daily Flow Rate" means the average daily flow calculated for the month that has the highest total flow during a calendar year.

f. "Design Capacity" means the volume of a containment feature at a discharging facility that accommodates all permitted flows and meets all aquifer protection permit conditions, including allowances for appropriate peaking and safety factors to ensure sustained reliable operation.

g. "Design Flow" means the daily flow rate a facility is designed to accommodate on a sustained basis while satisfying all permit discharge limitations and treatment and operational requirements. The design flow incorporates peaking and safety factors to ensure sustained, reliable operation.

h. "Final Permit Determination" means a written notification to the applicant of the director's final decision whether to issue or deny an aquifer protection permit.

i. "Onsite Wastewater Treatment Facility" means a conventional septic tank system or alternative system installed at a site to treat and dispose of wastewater predominately of human origin, generated at that site. An onsite wastewater treatment facility does not include a pre-fabricated, manufactured treatment works

that typically uses an activated sludge unit process and has a design flow of 3000 gallons per day or more.

j. "Setback" means a minimum horizontal distance maintained between a feature of a discharging facility and a potential point of impact.

k. "Typical sewage" means sewage in which the total suspended solids (TSS) content does not exceed 430 m g/l, the five-day biochemical oxygen demand (BOD) does not exceed 380 mg/l, and the content of fats, oils, and greases (FOG) does not exceed 75 mg/l.

l. "Gray water" means wastewater collected separately from a sewage flow that originates from a clothes washer, bathtub, shower, and sink, but does not include Wastewater from a kitchen sink, dishwasher, or toilet.

m. "Gray water disposal system" means the on-site use and management of not more than 400 g allons of gray water per day and a system that complies with the requirements of Arizona Administrative Code R18-9-711.

n. "Tank Riser" means a watertight extension of the septic tank access opening to within six (6) inches of finished grade and removable watertight cover, or above grade with gas tight cover.

o. "Disposal Area Riser" means a vertical pipe installed from the bottom of the onsite wastewater system disposal area, perforated within the disposal area, and extended to within six (6) inches of finished grade or above with an accessible cap that allows periodic inspection.

p. "Notice of Intent to Discharge" or "NOID" means a request to begin the process to receive a discharge authorization under aquifer protection permit rules.

q. "Phase I" means site and soils investigation in preparation for NOID application to install a septic system.

r. "Phase II" means the application for a notice of intent to discharge.

REGULATION 2. Permit to Install Required

a. No person may install, materially alter, or add to any on-site wastewater treatment facility without first applying for and obtaining a written approval from the Department.

b. The construction approval shall expire two (2) years after the date of issue unless, before the permit expires, construction of the facility or system is complete and has been inspected and approved by the Department.

c. Department approval is required for the abandonment or closure of an onsite wastewater treatment facility and the abandonment or closure shall comply with

closure requirements in the regulations of Arizona Department of Environmental Quality.

d. A general application for site investigation, site and test hole inspection, miscellaneous review/reconnect plan reviews, or septic system abandonment/closure shall expire one (1) year from date of application and/or one (1) year from Phase I Site Approval.

REGULATION 3. Approval to Operate Required

a. Work shall conform to plans and be in compliance with this Code and the regulations of the Arizona Department of Environmental Quality.

b. The Environmental Health Officer shall make necessary inspections of installations and when satisfied that an installation complies with this Code, and regulations of the Arizona Department of Environmental Quality, shall issue written approval to the permittee.

c. Operation and use of an on-site wastewater treatment facility shall not commence before final inspection has been made and approved, all permit fees are paid, all required documents have been received, and written approval has been issued by the Department.

REGULATION 4. General

All onsite wastewater treatment facilities must conform to the applicable general provisions relating to sewage and waste disposal, and with the specific provisions of this section.

a. Onsite wastewater treatment facilities are prohibited:

1. When connection may reasonably and practicably be made to an approved municipal, community, or similar sewerage system. When installation of a municipal, community, or similar sewerage system or extension, to which connection may be made, is imminent, the Department may waive the full application of these regulations and permit the installation of temporary sewage disposal facilities for premises or subdivisions. In such cases, the Department shall stipulate the conditions and limitations it deems necessary to protect the public health, and to insure speedy connection to the sewerage system, and the owner and operator of such temporary facilities shall be bound to these stipulations and conditions;

2. When soil conditions, topography, or other conditions are such that an onsite wastewater treatment facility cannot be expected to function satisfactorily, or where ground water or soil conditions are such that an onsite wastewater treatment facility may cause pollution of ground water;

3. When such installation may create an unsanitary condition or public health nuisance.

b. The use of cesspools is prohibited.

c. The installation of onsite wastewater treatment facilities in new subdivisions, establishments, or premises, is prohibited where such subdivisions, establishments, or premises are contiguous to an approved sewerage system to which connection may reasonably and practically be made.

d. The use of an onsite wastewater treatment facility by more than one (1) property, dwelling, commercial unit or other premises is prohibited unless it can be shown to the satisfaction of the Environmental Health Officer that such properties, dwellings, commercial units or premises are constructed, designed and located in such a manner that it is impossible to construct separate onsite wastewater treatment facilities for them.

e. In areas served by a municipal or other approved sewage disposal system, when an onsite wastewater treatment facility fails, and in the opinion of the Department, a public health nuisance arises as a result of such failure, (1) the plumbing system of the premises shall be disconnected from the defective onsite wastewater treatment facility and forthwith connected to the approved sewage disposal system, (2) the onsite wastewater treatment facility shall comply with closure requirements in the Arizona Department Of Environmental Quality Rules and ~~be~~ of the Department.

f. The effluent from onsite wastewater treatment facilities may not discharge onto the surface of the ground, into any water course, abandoned well, pit, mine or similar excavation, or anywhere it may pollute, tend to pollute or create a hazard to any potential or actual water supply or water supply system, **i**ndustrial wastes shall not be discharged into any onsite wastewater treatment facility without the written approval of the Department.

g. All back filling shall be done with clean earth, free of large stones, broken masonry, stumps, waste construction materials, etc., and accomplished in such a manner as to minimize settling and to avoid placing undue strain on the system.

h. If water or a limiting layer is encountered during excavation for test holes or during onsite wastewater treatment facility installation, the work shall be suspended immediately and revised plans submitted to the Department for approval.

i Hair and lint traps shall be installed on drains connected to an onsite wastewater treatment facility for hair salons, commercial laundry facilities, and pet and horse grooming facilities.

REGULATION 5. Minimum Requirements for the Design, Installation, Site Investigation, and Operation of Onsite Wastewater Treatment Facilities and Gray Water Disposal Systems

a. The owner of any of the following types of onsite wastewater treatment plant is required to submit an annual maintenance record on a form provided by the Department and pay a fee as listed in Chapter I, Regulation 5 of this Code:

(1) Aerobic treatment system
(2) Sequencing batch reactors
(3) Systems requiring disinfecting devices, and
(4) Systems with maintenance requirements prescribed by the manufacturer.

b. The following provisions of The Arizona Administrative Code ("A.A.C."), including all revisions, technical corrections, and supplements published as of March 31, 2010, are incorporated into this Environmental Health Code by reference:

Title 18 Chapter 9 Section 110. (R18-9-110.);
Section A301. A.4. (R18-9-A301.A.4);
Section A301. B. (R18-9-A301 B.);
Section A301. D. (R18-9-A301.D.);
Section A302. (R18-9-A302.);
Section A303.A. (R18-9-A 303.A.);
Section A304. (R18-9-A304.);
Section A305.B. (R-18-A305.B.);
Sections A306. through A309 D. and A309F, (R18-9-A306 through R18-9-A309.D and A309F);
Sections A310. through A316. (R18-9-A310 through R18-9-A316.);
Sections E301 through E323. (R18-9- E301 through R18-9-E323.);
Section 711 (R18-9-711).

c. Copies of the A.A.C. Rules adopted by reference in Subsection b above are available from the Arizona Secretary of State.

d. For the purpose of this Code, references to "Department" in Title 18 Chapter 9, means the Maricopa County Environmental Services Department.

REGULATION 6. Site Safety

a. In order to protect humans and animals at the installation site, the property owner, its authorized agent, and its contractor(s) shall be responsible for installation site safety for work performed under the rules of this Section.

b. Test holes shall be secured by placing protective signage, equipment, barriers, and/or by covering the test holes. Test holes shall be backfilled and compacted immediately after the property owner, its authorized agent or its contractor has been informed that the site investigation has been completed. Test holes shall remain secured at all times.

c. Installation sites shall be secured with signage, equipment, and/or barriers appropriate to the site.

d. If any newly-constructed or modified portion of an onsite wastewater treatment facility requiring inspection is receiving or has received wastewater discharge, notice shall be given to the Department at the time of the inspection request.

e. If any newly-constructed or modified portion of an onsite wastewater treatment facility requiring inspection is receiving or has received wastewater discharge, the

property owner, its authorized agent or its contractor(s) shall be present at the site during the inspection. The property owner, its authorized agent or its contractor(s) shall provide an appropriate measuring device, disinfectant, and any other equipment deemed necessary by department personnel performing the inspection.

MARICOPA COUNTY ENVIRONMENTAL HEALTH CODE

CHAPTER II

SEWAGE AND WASTES

SECTION 9

CLASSIFICATION OF WASTEWATER TREATMENT PLANTS AND REQUIREMENTS FOR CERTIFIED OPERATORS

REGULATION 1. Definitions

a. "Certified Operator" means an operator who holds a current certificate issued by the Arizona Department of Environmental Quality in the field of wastewater treatment, or wastewater collection.

b. "Collection system" means pipelines, conduits, pumping stations, force mains, and all other devices, appurtenances and facilities used for collecting and conducting wastewater to a central point for treatment and disposal.

c. "Director" means the Director of the Maricopa County Department of Health Services or his authorized agent.

d. "Direct Responsible Charge" means day-to-day decision making responsibility for a wastewater treatment plant, collection system, or effluent distribution system, or a major portion of such a facility.

e. "Effluent Distribution System" means the pipelines, appurtenances, devices and facilities of a reclaimed wastewater system which conduct effluent from a wastewater treatment plant to a point of final reuse.

f. "Facility" means a wastewater treatment plant, effluent distribution system, or collection system.

g. "On-site Operator" means an operator who visits a facility at least daily, for the purpose of ensuring that it is operating properly.

h. "Operator" means a person who is responsible for the actual day-to-day operation of a facility or a portion thereof. This includes the operator of a remote control system in which the operator is in direct control of the entire system or a portion thereof from a central location. It also includes the chief operator who supervises the operation of the facility. The term operator includes both on-site and remote operators as defined in this section.

i. "Population Equivalent" means the population which would contribute an equal amount of biochemical oxygen demand (BOD) computed on the basis of 0.17 pounds of five-day, 20-degree centigrade BOD per capita per day.

j. "Remote operator" means an operator who is not an on-site operator.

k. "Wastewater Treatment Plant" means processes, devices and structures used for the purpose of treating or stabilizing wastewater or industrial waste and disposing of the effluent.

REGULATION 2. Exemptions

Owners of the following facilities are exempt from the requirements of this section:

a. "Non-Community" septic tanks and collection system discharging to "Non-Community" septic tanks.

b. Any collection system serving a population of fewer than 2,500 persons which discharges into a facility which is operated by a certified operator.

c. Any collection system serving a nonresident population and discharging into a collection system operated by a certified operator.

d. Agricultural or industrial wastewater facilities used to treat, recycle, or impound industrial or agricultural wastes within the boundaries of the industrial or agricultural property.

e. Industrial waste pretreatment facilities in which treated wastewater is released to a collection system or wastewater treatment plant which is regulated by these regulations.

f. Facilities for treating industrial wastes which are not treatable by biological means.

g. Wastewater treatment devices serving an individual home.

REGULATION 3. General Requirements

a. The owner or the purveyor of services shall utilize the services of a certified operator of the require classification for each facility for the purpose of assuring that the facility is operating properly. The certified operator shall have direct responsible charge of the operation of the wastewater treatment plant, or the collection or effluent distribution system. Any owner or purveyor who meets the requirements for certification may become certified as operator of the facility for which he has direct responsible charge. The Chief Operator or Superintendent in direct responsible charge shall be certified at the grade of the facility. Shift foremen or other operators in charge of the facility in the absence of the Chief Operator or Superintendent shall be certified at a grade no lower than one grade below the grade of the facility.

b. It is the facility owner's responsibility to ensure that the name of the required certified operator is on file at all times with the Department. If the owner of a facility replaces the designated operator with another operator, the new operator shall be properly certified at the time he begins operation of the facility. The owner shall notify the Department in writing within ten days of the date of the replacement. The certified operator shall notify

the Department in writing within ten days of the date he ceases operation of a facility and within ten days after he commences operation of any facility.

c. There are three types of facilities:

(1) Wastewater Treatment Plants,

(2) Collection Systems, and

(3) Effluent Distribution Systems.

All facilities shall be classified according to type of facility, population or population equivalent served, flow, and complexity of treatment as described in these regulations.

d. There are four grades of classification, with grade-4 being the highest. The Department may change the classification of a particular facility by reason of the incorporation in the facility of special features of design or characteristics more difficult to operate than usual, or by reason of wastewater unusually difficult to treat, or by reason of effluent reuse or other potential health factors. In multi-facility systems, each facility shall be classified according to complexity and the total population or population equivalent served or flow rate.

e. A person holding certification in any particular type and grade is permitted to operate all facilities in that particular type and grade and any lower grade.

f. Each facility requires the services of an on-site operator certified at the grade of the facility. An operator may operate one or more facilities as a remote operator under the following conditions:

(1) The remote operator is certified at or above the grade of the facility.

(2) Each facility, except a grade-1 facility, has an on-site operator certified at a level no lower than one grade below the grade of the facility. A grade-1 facility requires an on-site representative, who is not required to be certified.

(3) The remote operator personally instructs the on-site operator or representative in proper operation and maintenance of each facility, provides him with written instructions, and assures that adequate records are kept.

(4) The remote operator provides the on-site operator or representative with a telephone number or numbers at which he can be reached at all times.

(5) The remote operator resides no more than three hours travel time from any facility which he serves as remote operator.

(6) The facility operated by the remote operator is operating in compliance with all applicable regulations.

(7) The remote operator personally inspects a facility as often as necessary to assure proper operation and maintenance, but in no case less than the following:

(a) Grade-1 wastewater treatment plants - monthly.

(b) Collection systems serving fewer than 2,500 people - bimonthly.

(c) Grade-2 wastewater treatment plants serving less than 1,000 people - weekly.

(d) Grade-2 wastewater treatment plants serving greater than 1,000 people, and all grade-3 and grade-4 wastewater treatment plants - daily.

g. The owner or the purveyor of services for any facility is in violation of this section if the facility is operated in a manner which violates County or State Rules and Regulations for the protection of water quality and the environment.

REGULATION 4. Classification of Wastewater Treatment Plants, Collection Systems, and Effluent Distribution Systems

a. Treatment plants shall be classified according to population equivalent served, flow, degree of hazard to public health, type of facility and degree of treatment, as specified in this section.

(1) Grade-1 includes:

(a) Stabilization ponds serving fewer than 2,000 persons and treating a flow of 200,000 gallons per day or less.

(b) Any wastewater treatment facility not designated as grade-2-3, or 4.

(2) Grade-2 includes:

(a) Stabilization ponds serving more than 2,000 persons or treating a flow greater than 200,000 gallons per day, and

(b) All aerated lagoons, and

(c) All facilities employing biological treatment based upon the activated sludge principle, or trickling filters, designed to serve a population equivalent of fewer than 5,000 persons and treating a flow of 500,000 gallons per day or less, except as provided in Paragraph a.(3) (c) of this regulation.

(3) Grade-3 includes:

(a) All facilities employing biological treatment based upon the activated sludge principle designed to serve a population equivalent of 5,000 to 20,000 persons or treating a flow between 500,000 and 2,000,000 gallons per day, and

(b) All facilities employing trickling filtration designed to serve a population equivalent of 5,000 to 25,000 persons, or treating a flow between 500,000 and 2,500,000 gallons per day, and

(c) Variations of activated sludge requiring specialized knowledge including, but not limited to, contact stabilization and sequencing batch reactors

serving any population equivalent of up to 20,000 persons and treating a flow rate of up to 2,000,000 gallons per day.

(4) Grade-4 includes:

(a) All facilities employing biological treatment based upon the activated sludge principle designed to serve a population equivalent greater than 20,000 persons, or treating a flow greater than 2,000,000 gallons per day, and

(b) All facilities employing trickling filtration designed to serve a population equivalent greater than 25,000 persons, or treating a flow greater than 2,500,000 gallons per day.

(c) Variations of activated sludge requiring specialized knowledge including, but not limited to, contact stabilization and sequencing batch reactors serving any population equivalent greater than 20,000 persons or treating a flow rate greater than 2,000,000 gallons per day.

(5) Facilities requiring tertiary treatment or nutrient removal shall be graded one level higher than the minimum grade based upon population equivalent or flow.

b. Until July 1, 1991, the following classification of collection and effluent distribution systems shall apply. Ordinarily, collection and effluent distribution systems are considered as a part of the treatment facility; however, where such a conveyance facility is separated from treatment, either in jurisdiction or in responsibility, the collection and/or effluent distribution system is classified as grade 1.

c. Classification of wastewater collection and effluent distribution systems. Effluent distribution systems shall be operated by a graded wastewater collection operator. Beginning on July 1, 1991, collection and effluent distribution systems shall be classified by population served, as follows:

GRADE	POPULATION
1	0 - 2,500
2	2,501 - 10,000
3	10,001 - 25,000
4	More than 25,000

d. By July 1, 1991, each owner or a purveyor of services for a collection or effluent distribution system shall have the services of an operator certified at the grade of the system as reclassified under these regulations.

e. Effluent distribution systems shall be operated by a graded wastewater collection operator.

MARICOPA COUNTY ENVIRONMENTAL HEALTH CODE

CHAPTER II

SEWAGE AND WASTES

SECTION 10

BIOHAZARDOUS MEDICAL WASTE TRANSPORTATION

REGULATION 1. Biohazardous Medical Waste Transportation

a. Arizona Administrative Code ("A.A.C.") R18-13-1401 through R18-13-1404 and R18-13-1409, which were effective September 17, 1999, are incorporated herein by this reference.

b. The A.A.C. rules adopted by reference in subsection a. do not include future editions or amendments to those rules.

c. Copies of the A.A.C. rules adopted by reference in subsection a. are available on the Arizona Secretary of State's web site at **www.azsos.gov/public_services/title_18/18-13.htm.**

d. For the purpose of this code, references to "Department" in A.A.C. Title 18 means the Maricopa County Environmental Services Department.

REGULATION 2. Permit Required

No person shall transport biohazardous medical waste without a valid permit to do so, unless exemption requirements are met as referenced in Chapter II, Section 10, Regulation 1 of this Code.

REGULATION 3. Vehicles

a. The transportation vehicle shall be cleaned frequently in order to prevent the vehicle from becoming a nuisance or breeding place for insects, and shall be maintained in good order and repair.

b. Each vehicle operated under permit shall have the permit number clearly inscribed on the side door panels and rear face thereof in 3 inch letters or numerals or both.

MARICOPA COUNTY ENVIRONMENTAL HEALTH CODE

CHAPTER III

RODENTS, INSECTS AND VERMIN

REGULATION 1. Infestation -- Harborage

The infestation by or harborage of rodents, lice, bedbugs, roaches, flies or other arthropods of public health significance, in or about any premises is hereby declared to be dangerous to public health. Any condition or place that constitutes a feral colony of honeybees that is not currently maintained by a beekeeper and that poses a health or safety hazard to the public is hereby declared to be a public nuisance dangerous to the public health. No person shall cause, maintain, or within his control, permit such infestation or harborage. The owner, occupant, or person in control of any place or premises shall take all reasonable measures to prevent such infestation or harborage and, upon notification from the Department to do so, shall take all necessary and proper steps to eliminate the infestation or harborage and to prevent its recurrence.

REGULATION 2. Mosquitoes

No person shall cause, maintain or, within his control, permit any accumulation of water in which mosquitoes breed or are likely to breed. The owner, occupant, or person in control of any place where mosquitoes are breeding, or which constitutes a breeding place for mosquitoes shall take all necessary and proper steps to eliminate the mosquito breeding and to prevent its recurrence through the elimination of or the institution of necessary control measures at mosquito breeding sites.

REGULATION 3. Permit Suspended or Revoked When Premises Infested

No person may, for fee or other consideration, offer any premises for use as a human habitation or a sleeping accommodation, or use any premises as a place where food or food products are stored, manufactured, processed, served or offered for sale while those premises harbor rodents, lice, bedbugs, roaches, flies, or other arthropods of public health significance as defined by the United States Public Health Service and the Arizona Department of Health Services. The Health Officer shall have sufficient cause to suspend a permit issued for such use when the permittee fails to abate and eliminate such infestation after having been notified to do so by the Department.

MARICOPA COUNTY ENVIRONMENTAL HEALTH CODE

CHAPTER IV

LAND SUBDIVISIONS

SECTION 1

GENERAL

REGULATION 1. Definitions

a. "Approved" or "Approval" means approved in writing by the Department.

b. "Common usage pipelines" means all those water and wastewater drain lines where the ownership and maintenance are vested as an undivided interest.

c. "Condominium" means a subdivision established as a horizontal property regime pursuant to A.R.S. Title 33, Chapter 9, Section 1201 et Seq.

d. "Department" means the Maricopa County Health Department or its designated representative.

e. "Garbage" means putrescible animal and vegetable wastes from the handling, preparation, cooking and consumption of food.

f. "Refuse" means all putrescible and nonputrescible solid waste (except body wastes), including garbage, rubbish, ashes, street cleaning, dead animals, abandoned automobiles, and solid market and industrial wastes.

g. "Subdivision" or "Subdivided Lands" means improved land or lands divided or proposed to be divided for the purpose of sale, lease, or for cemetery purposes whether immediate or future, into six or more lots, parcels or fractional interests. This paragraph shall not apply to the division or proposed division of land located in Maricopa County into lots or parcels each or which is, or will be, thirty-six acres or more in area including to the centerline of dedicated roads or easements, if any, contiguous to the lot or parcel.

REGULATION 2. Plan Approval Required

a. A preliminary plat of any proposed subdivision must be submitted to the Department, either directly or through the planning department having jurisdiction,

for review and comments. The plat must indicate the proposed source of domestic water and the proposed method of sewage disposal. In addition, the distance to the closest public water and sewer line must be shown.

b. No subdivision or portion thereof shall be sold, offered for sale, leased or rented by any person and no permanent building shall be erected thereon until plans, specifications and a recorded plat or a final approved plat by the Board of Supervisors of Maricopa County or the appropriate city council of such subdivision and related data have been filed with and approved by the Department and the required fees paid. T he plans and specifications shall include provision for an adequate and safe water supply, and approved sewage disposal facility for every lot in the subdivision, garbage disposal facilities and other pertinent matters, including the results of soil and percolation tests as may be required by the Department. The installation of required facilities shall be in accordance with the approved plans or any approved revision thereof.

c. The plans of proposed water supply and sewage disposal systems shall be submitted in a format as requested by the Department.

d. In reviewing subdivision plans and plats for approval, the Department shall take notice of the proximity of existing community or municipal sewers and sewage disposal systems and the feasibility and reasonableness of connecting the subdivision thereto. Where the Department determines that such connections may practically, reasonably and properly be made, this shall be shown on the plans before any approval is granted.

e. In cases where connection of a subdivision to a community water well system or a community sewage disposal system is permitted, the owner of the system shall hold a Certificate of Approval to Operate from the Arizona Department of Environmental Quality and a C ertificate of Convenience and Necessity from the Arizona Corporation Commission or the system shall be otherwise controlled so as to insure the quality, continuity and duration of operation and maintenance required by the Department and Arizona Department of Environmental Quality.

f. The distance of the subdivision to the nearest public water supply main and sewer main of a municipal or community system shall be shown on the plans.

REGULATION 3 Size of Lots

In the case of lots upon which the installation of individual wells and/or individual sewage disposal systems will be necessary, lot sizes shall be sufficient to meet the following requirements:

a. Where both the water supply and individual sewage disposal system must be developed on the same lot, the minimum lot size shall be one acre, excluding streets, alleys and other rights-of-way.

b. Where water from a central system is provided, the lot size shall be sufficient to accommodate the individual sewage disposal system and provide for at least 100 per percent expansion of this system based on a four bedroom house built within the bounds of the property.

c. Where lots are zoned for commercial uses the lot shall be sufficient to accommodate the sewage disposal system and provide for at least 100 percent expansion of the system within the bounds of the property allowing a minimum of six feet distance to the property lines or easement lines.

d. All cases shall comply with Chapter II, Sewage and Wastes, Section 8, Individual Sewage Disposal Systems, Regulation 6, Individual Sewage Disposal System Location. With the application for approval of the subdivision, the subdivider shall submit written proof acceptable to the Department that the operators of the water system and/or public sewerage system will provide these sanitary facilities to each individual lot in the subdivision prior to human occupancy.

REGULATION 4. Violations

Any person, firm, company or corporation who offers for sale or rent any tract of land contrary to these regulations shall be prosecuted as provided by law.

MARICOPA COUNTY HEALTH CODE

CHAPTER IV

LAND SUBDIVISIONS

SECTION 2

WATER SUPPLY

REGULATION 1. Design Standards

Proposed water supply and distribution systems shall comply with Chapter V, Water Supply, of the Maricopa County Health Code and the applicable rules and regulations of the Arizona Department of Environmental Quality and shall conform in general with the design standards contained in the applicable Engineering Bulletins of the Arizona Department of Environmental Quality.

REGULATION 2. Details

Where water from an approved public water supply is proposed for use in a subdivision, complete plans for all proposed water mains necessary to serve each and every lot together with the size of the existing water main and the location of the closest connection shall be shown on the plan. Construction specifications shall be submitted with the plans. Recorded reference to intended compliance with approved specifications on file with the Department may be accepted.

REGULATION 3. Proposed System

Where the owner of a subdivision, or other interested person, firm, company or corporation proposes to develop a source or sources of supply and to construct a distribution system to furnish water to the subdivision, either free or for charge, complete details of the proposed water system including plans and specifications shall be furnished. Department approval of the supply and proposed system must first be obtained before an approval to the State Real Estate Department for the sale of lots will be granted. The installation of such facilities shall be in accordance with the plans, and any revisions thereof, approved by the Department.

MARICOPA COUNTY HEALTH CODE

CHAPTER IV

LAND SUBDIVISIONS

SECTION 3

SEWAGE DISPOSAL

REGULATION 1. Design Standards

Sewage disposal facilities shall comply with Chapter II, Sewage and Wastes, of the Maricopa County Health Code and applicable rules and regulations of the Arizona Department of Environmental Quality and shall conform in general with the design standards contained in the applicable engineering bulletins of the Arizona Department of Environmental Quality. Complete plans for all new or additions to existing treatment facilities and sewers shall be submitted for approval. Plans for new sewers shall show length and location, inside diameter, type of pipe, location of manholes and clean outs necessary to serve each and every lot and location and size of closest existing sewers and closest manhole. Construction specifications shall be submitted with the plans. Recorded reference to intended compliance with approved specifications on file with the Department may be accepted.

REGULATION 2. Individual Sewage Disposal Systems

a. Individual sewage disposal systems are prohibited where

(1) Soil conditions and terrain features or other conditions are such that these systems cannot be expected to function satisfactorily; or

(2) Groundwater or soil conditions are such that these systems may cause pollution of groundwater; or

(3) Such installations may create an unsanitary condition or public health nuisance; or

(4) Connection to a public sewer system is reasonable and practical.

b. Where individual sewage disposal systems are proposed, the following conditions shall be satisfied:

A geological feasibility report shall be made by an engineer, geologist or other qualified person which shall include results from percolation test and boring logs obtained at sites in the proposed subdivision designated by the Department. At least one percolation test and boring log per acre, or one percolation test and boring log per lot where lots are larger than one acre shall be made, except when other reliable data are submitted showing that individual disposal systems could reasonably be expected to function properly on each lot in the proposed subdivision. In no case will less than a minimum of one percolation test and soil boring hole log be required for each 5 acres unless the lots are over 5 acres in size and

then one for each lot is required in the vicinity of the proposed system. All pertinent test data shall be submitted to the Department for review. Alternative on-site systems shall not be approved for wastewater disposal as the basis for subdivision approval. Disposal of sewage to a public sewer system is not considered an alternative on-site system for the purposes of complying with this regulation. The Department may require additional tests when it deems necessary. The approval of a subdivision based upon such reports shall become void if the plat is further subdivided or lot lines are substantially relocated.

MARICOPA COUNTY HEALTH CODE

CHAPTER IV

LAND SUBDIVISIONS

SECTION 4

REFUSE DISPOSAL

REGULATION 1. General

The storage, collection and disposal of refuse shall comply with the appropriate sections of Chapter II of the Maricopa County Health Code.

REGULATION 2. Available Facilities

When a subdivision is proposed for an area served by an approved community or private refuse collection service, the subdivider shall submit acceptable proof to the department that such collection service will be available to the subdivision.

REGULATION 3. Notification

a. Where refuse collections service is not available, the subdivider shall notify the purchaser or tenant of each lot in writing that the storage and disposal of all refuse in a manner pursuant to law is the purchaser's or tenant's responsibility.

b. Where a collection service or an existing approved disposal area is not conveniently available to the subdivision, a plan approval will not be granted unless an approved separate disposal area is provided by the subdivider or arrangements are made to utilize a new, conveniently located approved disposal area. Such arrangements shall include, but not be limited to, the written permission of the person responsible for the operation of the new site.

MARICOPA COUNTY ENVIRONMENTAL HEALTH CODE

CHAPTER IV

LAND SUBDIVISIONS

SECTION 5

CONDOMINIUMS

REGULATION 1. General

The regulation applies to condominium water and wastewater drainage systems not under public utility ownership and control, but use in common.

REGULATION 2. Design Standards

a. The water piping and wastewater drainage systems serving condominiums shall be constructed in accordance with the current requirements of the Maricopa County Building Safety Department or local building inspection authority.

b. Plans shall be submitted and shall include the size and location of meters, inside diameter, type, length and location of all proposed and existing common usage water lines and inside diameter, type, length, slope and location of all proposed and existing common usage wastewater drainage piping including manholes and/or cleanouts necessary to serve each and every unit. Plans and specifications shall be in sufficient detail to show compliance with subsection a. above.

c. Documents submitted for approval shall include covenants adequate to insure that acceptable provisions have been made for the maintenance of water and wastewater drainage piping serving areas in common.

d. Where existing housing is proposed to be converted to condominium status, proof shall be submitted that the water and wastewater drainage systems are approved by the local building inspection authority or certified to be adequate by a registered professional engineer who shall affix his signature and seal of registration in the State of Arizona to as-built plans submitted for approval. In addition, one set of as-built water and sewer plans will be submitted to the Department as part of the subdivision application process.

MARICOPA COUNTY ENVIRONMENTAL HEALTH CODE

CHAPTER V

WATER SUPPLY

SECTION 1

REGULATION 1. Water Supply

a. The following provisions of the Arizona Administrative Code ("A.A.C."), including all revisions, technical corrections, and supplements published as of March 31, 2010 are incorporated by reference:

Title 18, Chapter 4, Article 1. Primary Drinking Water Rules

Title 18, Chapter 4, Article 2. State Drinking Water Rules

Title 18, Chapter 5, Article 5. Minimum Design Criteria

Title 12, Chapter 15 Sections 811, 816 and 822
(R12-15-811, R12-15-816 and R12-15-822).

b. The A.A.C. Rules adopted by reference in Subsection a. include no future editions or amendments.

c. Copies of the above-described A.A.C. Rules adopted by reference herein are available from the Arizona Secretary of State.

d. For the purpose of this code, references to "Department" in Title 18, Chapter 4, means the Maricopa County Environmental Services Department.

REGULATION 2. Plans Submitted

a. No person shall install any public water supply system or make additions, modifications or alterations thereto which involve a change in the plant, works, system, or sources of supply, until design criteria and complete plans and specifications for the work, together with the plans review fee, have been submitted to and have received the approval of the Department.

b. Minimum well construction requirements are set forth in R-12-15-811, as incorporated by reference and attached as Appendix 1 to this chapter.

REGULATION 3. Permit Required

No water system covered by those regulations shall be operated or maintained in Maricopa County without a permit in force, issued by the Department.

REGULATION 4. Special Conditions - Emergencies

a. Unsafe Supplies - The Department, upon determination that a water supply or source used or held out for use as a public water supply for domestic or culinary use does not comply with this code and may post about the water supply system such warning signs or labels as it deems necessary to protect the public; and, no person shall remove such sign or label excepting with the express written permission of the Department.

b. The owner or operator of a public water system shall not construct or add to its system a well that is not in compliance with this chapter.

c. Notification of Department (unsafe condition) - The owner or operator of a public water supply system shall notify the Department immediately upon learning that the water therein is contaminated or may be contaminated as required by this chapter.

d. Emergencies - No new or emergency source of water shall be introduced into an approved water supply system and no approved treatment process or protection provision shall be altered or discontinued unless the owner of the system has an approved emergency operation plan on file with the department that is in compliance with R18-4-116 to provide safe drinking water during an emergency.

   1) Emergency Intake - No intakes, where water of doubtful quality may be admitted to the distribution system, shall be established or maintained in connection with a public water supply system.

   2) Bypasses - No bypass shall be established or maintained where-by water may be diverted around any feature of a purification process for a public water supply system unless specific approval is first obtained from the Department.

e. Continuity of supply - No public water supply system shall be constructed or maintained which depends on hauled or transported water for continuity of the supply; excepting that in case of a controlling emergency, so declared by the Department, where such continuity is disrupted, hauled water may be introduced into the system in compliance with procedures and for such duration as is approved by the Department.

REGULATION 5. Pollution of Groundwater Prohibited

a. No contaminated or polluted material shall be discharged directly into any water well or other well, whether constructed for that purpose or abandoned or anywhere else on or in the ground where it may or will penetrate the underlying water bearing strata or pollute or contaminate ground water.

1) The prohibitions set forth in this regulation do not apply to discharges of a pollutant or pollutants into the ground that have been approved in an aquifer protection permit issued by the director of The Arizona Department of Environmental Quality pursuant to A.R.S. Title 49, Chapter 2, Article 3.

b. Any well no longer used shall be properly sealed against the entry of pollution, contamination, or other foreign matter.

REGULATION 6. Abandoned Wells

Wells which are no longer used as a source of water supply shall be properly abandoned or capped as required by this Chapter

MARICOPA COUNTY ENVIRONMENTAL HEALTH CODE

CHAPTER V

WATER SUPPLY

SECTION 2

TRANSPORTATION OF WATER IN BULK

FOR DOMESTIC USE

REGULATION 1. Hauled Water

a. The following Section of the Arizona Administrative Code ("A.A.C.") including all revisions, technical corrections, and supplements published as of March 31, 2004, is incorporated by reference:

Title 18, Chapter 4 Section 125 (R18-4-125);

b. The A.A.C. regulation adopted by reference in subsection a. includes no further editions or amendments.

c. A copy of the above-described regulations adopted by reference herein is attached as part of Appendix 1 to this chapter.

d. Thoroughly cleaned and disinfected food products tankers may be used to haul water when approved. Tanks or reservoirs that were previously used for transportation of products other than those stated above are specifically prohibited.

e. Tanks and reservoirs shall be constructed of non-toxic corrosion-resistant material and the contents protected from pollution arising from leaks, drainage, dust or for any other reason. A.A.C. Title 18, Chapter 4, Section 119.B. has been incorporated by reference in Chapter V, Section 1, Regulation 1 and is attached as Appendix 1 to Chapter V.

f. Filler-lines or hoses shall be flushed to remove all forms of contamination before being used to fill tanks or reservoirs.

g. No part of the filler-line or hose shall be permitted to come in contact with water or any surface area within the tank.

h. The operator of trucks engaged in hauling or transporting public domestic water shall have available approved test kits for the determination of chlorine and other disinfectants levels and shall perform such tests

REGULATION 2. Permit Required

a. No person shall engage in hauling or transporting water intended for public potable use without a valid permit to do so from the Department.

b. Each vehicle use pursuant to this regulation shall have the permit number clearly displayed on the side door panels and the rear face. Such number shall be legible at all times, and not less than 3 inches high.

MARICOPA COUNTY ENVIRONMENTAL HEALTH CODE

CHAPTER VI

BATHING PLACES - PUBLIC AND SEMIPUBLIC SWIMMING POOLS

SECTION 1

GENERAL PROVISIONS

REGULATION 1. Definitions

(1) "A.A.C." is an abbreviation for Arizona Administrative Code.
(2) "ADEQ" is an abbreviation for Arizona Department of Environmental Quality.
(3) "ADHS" is an abbreviation for Arizona Department of Health Services.
(4) "Air induction system" means a system whereby a volume of air is introduced into_hollow ducting in a spa floor, bench or walls. An air induction system is activated by an air power blower and is separate from the water circulation system.
(5) "Algae" means microscopic, single-celled forms of plant life that exist in most surfaces and ground waters. Green, blue-green (frequently called black) and mustard algae are the types most common to swimming pools.
(6) "ANSI" is an abbreviation for American National Standards Institute.
(7) "Artificial bathing lake" means a man-made lake, lagoon or basin, lined or unlined, with an area equal to or greater than two acres (87,120 square feet), constructed and used or intended to be used for water contact recreation. This includes all recreational activities where there is a high probability of water ingestion and where related activities create a significant public health and safety risk. Such activities include, but are not limited to, wading, swimming, bathing, wind surfing, water skiing and jet skiing.
(8) "Approved" means acceptable to the Department or to the swimming pool agency that has the jurisdiction based on determination of conformity with principles, practices or political subdivision.
(9) "A.R.S." is an abbreviation for Arizona Revised Statutes.
(10) "ASME" is an abbreviation for American Society of Mechanical Engineers.
(11) "Backwash" means the process of thoroughly cleaning a filter by reverse flow of water through the filter.
(12) "Barrier" means a fence, wall, building or landscaping that obstructs access to a bathing place.
(13) "Bathing place" as used in these regulations includes all bodies of water used by persons for swimming, wading, hydrotherapy, recreation, bathing or special uses together with the shores, bathhouses, sanitary facilities, equipment and all other appurtenances to such bodies of water, except that these regulations do not apply to facilities constructed or maintained at any medical facility intended exclusively

for therapeutic treatment and facilities constructed and operated by the state of Arizona. A bathing place for consideration of design, permits, and fees shall be considered separate and distinct if:

(a) Bodies of water are physically separate; or
(b) Bodies of water are at different elevations; or
(c) Bodies of water are separated by a fence, wall or visual barrier which prevents or impedes direct physical or visual access to any portion of the body of water; or
(d) Bodies of water are separated by a channel, less than ten (10) feet wide.

(14) "Cartridge filter" means a depth, pleated or surface-type filter component with fixed dimensions that is designed to remove suspended particles from water flowing through the filter.
(15) "Clean" means free from slime, scum, dirt or other debris.
(16) "Construct" means, and includes, building or installing a new bathing place or enlarging or altering existing facilities.
(17) "Coping" means the cap on a swimming pool or spa wall that provides a finished edge around the swimming pool or spa.
(18) "Cross connection" means any physical connection between two (2) piping systems, one (1) of which contains potable water and the other sewage or water of unknown or questionable quality, through which water may flow from either system to the other.
(19) "Deck" means a hard surface immediately adjacent to or attached to a bathing place that is designed for sitting, standing or walking.
(20) "Deep area" means the portion of a bathing place that is more than five (5) feet deep.
(21) "Department" refers to Maricopa County Environmental Services Department.
(22) "Discharge piping" means the portion of the circulation system that carries water from the filter back to the swimming pool or spa.
(23) "DPD" is an abbreviation for Diethyl-p-Phenylene Diamine. The indicator usually is used in tablet form which measures chlorine and bromine levels in pool and spa water.
(24) "Diving area" means the area of the public or semipublic swimming pool that is designated for diving from a diving board, diving platform or starting block.
(25) "Fill and draw pool" means a bathing place where the principal means of cleaning is the complete removal of the used water and the replacement thereof with potable water.
(26) "Filtration rate" means the rate of water flowing through a filter during the filter cycle expressed in gallons per minute per square foot of effective filter area.
(27) "Flow through pool" means a bathing place where potable water constantly enters the pool and an equal quantity of used water constantly flows out of the pool.
(28) "Freeboard" means that section of the pool wall measured vertically between the water surface and the walkway or deck surface.
(29) "GPM" is an abbreviation for Gallons Per Minute.
(30) "Hose bibb" means a faucet with a threaded nozzle to which a hose may be attached.

(31) “Hydrotherapy jet” means a fitting that blends water and air and creates a high velocity turbulent stream of air-enriched water for injection into a spa.
(32) “Incontinent” means unable to restrain a bowel movement.
(33) “Lifeguard” means an attendant with Red Cross or equivalent certification who supervises the safety of bathers.
(34) Make-up water” means fresh water used to fill or refill a bathing place.
(35) “Maximum bathing load” means the design capacity or maximum number of users that a bathing place is designed to hold.
(36) “Natural bathing place” means unmodified natural outdoor lakes, ponds, rivers, etc.
(37) “Operate” means to conduct, maintain or otherwise provide facilities and appurtenances at bathing places.
(38) “NCAA” is an abbreviation for National Collegiate Athletic Association.
(39) “NFSHSA” is an abbreviation for National Federation of State High School Associations.
(40) “Operator” means an individual who owns, runs, maintains, or otherwise controls or directs the functioning of a bathing place.
(41) “Overflow system” means and includes gutters and other rim type overflows, surface skimmers and collection systems of various designs and manufacture.
(42) “Permit holder” means the entity that:
    (a) Is legally responsible for the operation of the bathing place such as the owner, the owner's agent, or other person; and
    (b) Possesses a valid permit to operate a bathing place.
(43) “pH value” indicates the degree of acidity or alkalinity of water. The pH scale is from 0 to 14 with pH 7.0 being the neutral point, i.e., water with pH of 7.0 is neither acid nor alkaline, and it is neutral. Above pH 7.0 the water is alkaline and below pH 7.0 it is acidic.
(44) “Potable water” means drinking water.
(45) “PPM” is an abbreviation for Parts Per Million.
(46) “Private residential spa” means a spa at a private residence used only by the owner, members of the owners' family and invited guests, or a spa that serves a housing group consisting of no more than three (3) living units (e.g. duplexes or triplexes). Private spas are exempt from these regulations.
(47) “Private residential swimming pool” means a pool operated by an individual for his own or his family’s use or for guests of his household, or by an owner, to serve a housing group consisting of no more than three (3) living units. Private pools are exempt from these regulations.
(48) “Public spa” means a spa that is open to the public with or without a fee, including a spa that is operated by a community, municipality, political subdivision, school district, university, college or a commercial establishment whose primary business is the operation of a spa.
(49) “Public swimming pool” means a swimming pool that is open to the public with or without a fee, including a pool that is operated by a community, municipality, political subdivision, school district, university, college or a commercial establishment whose primary business is the operation of a pool.
(50) “Recessed treads” means a series of vertically spaced, preformed stepholes in a swimming pool wall.

(51) “Recirculating pool” means a swimming pool where a portion of the pool water is constantly being removed, filtered and disinfected then returned to the pool.

(52) “Resurfacing” means any alteration that is greater than ten (10) percent of the pool interior surface. This shall include but not be limited to plastering, painting, tiling, application of pebble type finish, fiberglass or any other approved alternative surface.

(53) “Return inlet” means an aperture or fitting through which filtered water returns to a swimming pool or spa.

(54) “Return line” means that portion of the recirculating system piping which carries clean water from the filter back to the swimming pool.

(55) “Rope and float line” means a continuous line not less than three-quarter (3/4) inch in diameter that is supported by buoys and attached to opposite sides of a swimming pool to separate areas of the swimming pool.

(56) “Sanitary facilities” means a designated area that includes a toilet and sink and may include a shower or urinal.

(57) “Scum” means a film that forms on the surface of water.

(58) “Secchi Disk” refers to a 200-mm circular plate, which has opposite quarters painted gloss white and black.

(59) “Secchi Disk visibility” is the depth at which the disk can be seen when raised and lowered in the water.

(60) “Semiartificial bathing place” means a natural bathing place that has been modified by man.

(61) “Semipublic spa” means a spa operated for the residents of lodgings such as hotels, motels, resorts, apartments, condominiums, townhouse complexes, trailer courts, mobile home parks or similar establishments. A semipublic spa includes a spa that is operated by a neighborhood or community association for the residents of the community and their guests and any spa at a country club, health club, camp or similar establishment where the primary business of the establishment is not the operation of a spa and where the use of the spa is included in the fee for the primary use of the establishment.

(62) “Semipublic swimming pool” means a swimming pool operated for the residents of lodgings such as hotels, motels, resorts, apartments, condominiums, townhouse complexes, trailer courts, mobile home parks, or similar establishments. A semipublic pool includes a swimming pool that is operated by a neighborhood or community association for the residents of the community and their guests and a swimming pool at a country club, camp or similar establishment where the primary business of the establishment is not the operation of a swimming pool and where the use of the swimming pool is included in the fee for the primary use of the establishment.

(63) “Shallow area” means the portion of a swimming pool that is five (5) feet or less in depth.

(64) “Service animal” means an animal such as a guide dog, signal dog or other animal individually trained to provide assistance to an individual with a disability.

(65) “Shock treatment” means adding chlorine to water in an amount sufficient to destroy ammonia, nitrogenous and organic contaminants in the water by elevating

the free chlorine residual to a level 10 times the combined chlorine reading in parts per million.

(66) "Slime" means a glutinous or viscous liquid matter.

(67) "Slip resistant" means a surface that has a static coefficient of friction (wet or dry) of at least 0.50.

(68) "Spa" means an artificial basin, chamber or tank of irregular or geometric shell design that is intended only for bathing or soaking and that is not drained, cleaned or refilled for each user. A spa may include features such as hydrotherapy jet circulation, hot water, cold water, mineral baths or an air induction system. Industry terminology includes "hydrotherapy pool," "whirlpool", "hot tub" and "therapy pool".

(69) "SPAC" is an abbreviation for Swimming Pools Advisory Committee.

(70) "Special use pool" means a swimming pool intended for competitive aquatic events, aquatic exercise or lap swimming. A special use pool includes a wave action pool, exit pool for a water slide, swimming pool that is part of an attraction at a water recreation park, water volleyball pool or a swimming pool with special features used for training and instruction.

(71) "Spray pond" means an artificially constructed special use pool into which water is sprayed but not allowed to accumulate.

(72) "Suction outlet" means the aperture or fitting through which water is withdrawn from a swimming pool or spa.

(73) "Suction piping" means the water circulation system piping that carries water from the swimming pool or spa to the filter.

(74) "Swimming pool" and/or "Pool" shall mean an artificial basin, chamber or tank, constructed and used, or intended to be used, for swimming, diving or bathing. A bathing place less than two (2) acres (87,120 square feet) shall meet the criteria for swimming pools.

(75) "SVRD" is an abbreviation for Safety Vacuum Release Device.

(76) "SVRS" is an abbreviation for Safety Vacuum Release System.

(77) "Total alkalinity" means the measurements of the carbonates, bicarbonates and hydroxides in the water, which if insufficient, may cause the pH to be unstable and produce corrosive conditions. Conversely, if the total alkalinity is too high, scale could be formed.

(78) "Turnover rate" means the number of hours required to circulate a volume of water equal to the capacity of the swimming pool or spa.

(79) "User" means a person who uses any bathing place included in Chapter VI or uses adjoining deck area.

(80) "Variance" means a written document issued by the Department that authorizes a modification or waiver of one or more requirements of this Code if, in the opinion of the Department, a health hazard, safety or nuisance will not result from the modification or waiver.

(81) "Wading pool" means a shallow pool used or intended to be used primarily for wading by small children.

(82) "Water circulation system" means an arrangement of mechanical equipment connected to a swimming pool or spa by piping in a closed loop that directs water

from the swimming pool or spa to the filtration and disinfection equipment and returns the water to the swimming pool or spa.

(83) "Water circulation system components" means the mechanical components that are part of a water circulation system of a swimming pool or spa, including pumps, filters, valves, surface skimmers, ion generators, electrolytic chlorine generators, ozone process equipment and chemical feeding equipment.

(84) "Water level". The water level referred to in these standards shall be established in one of the following ways:

(a) The water level shall be deemed to fall in the midpoint of the operating range of the skimmers; or

(b) On pools with overflow systems, the level shall be deemed to be that established by the height of the overflow rim.

REGULATION 2. Approval of Plans and Construction Required

a. A person shall obtain design approval from the Department prior to starting construction of a new public or semipublic swimming pool, spa, wading pool, or special use pool, changing in use from a semipublic swimming pool to a public swimming pool, changing in use from a private residential swimming pool to a public or semipublic swimming pool, or beginning major modifications to an existing public or semipublic swimming pool or spa. For purposes of this subsection, major modifications include a change to:

1. The shape; or
2. The depth; or
3. The water circulation system; or
4. The enclosure; or
5. Resurfacing the pool interior or deck; or
6. Adding a water feature or planter; or
7. The disinfection system; or
8. The installation of diving equipment.

At a public or semipublic swimming pool an appropriately licensed contractor, Architect, or Professional Engineer shall submit plans for a major modification.

b. The owner shall make an Application for Approval to Construct any proposed bathing place and shall be submitted to the Department on forms furnished by the Department. Such application for approval shall accompany the plans, when required, and specifications at the time of submission to the Department for review.

c. The operator/owner of a previously approved bathing place as defined in these regulations, intending to change the nature of the classification from public to semipublic or from semipublic to public must demonstrate, to the satisfaction of the Department, that the facility meets all requirements of these regulations as related to the desired classification. If any additional construction or modification of the facility shall be required, plans and specifications of the proposed facility shall be submitted for approval as required in Chapter VI, Section 1, Regulation 2, b.

d. Plans and specifications shall be submitted to the Department with the appropriate fees as listed in Chapter I of the Maricopa County Environmental Health Code at least 30 days prior to the date upon which action is desired. Plan documents submitted for approval to construct shall include a general plot plan, plans and specifications showing the pool shape, dimensions, water treatment and pumping facilities, piping arrangement and sizes, source of water supply, method of disposal of wastes, and all pertinent data upon which the design is based on and shall include capacities of the various units, safety equipment, architectural drawings for fencing, water features and other information necessary to permit a clear and full understanding of the proposed project. Where required, detailed plans of bathhouses, dressing rooms, toilets, recreational and other pool appurtenances shall be included.

e. All plans and specifications submitted to the Department for approval shall be prepared by, or under the supervision of, a currently registered Arizona Professional Engineer or Architect, or a swimming pool contractor with the following licenses (per project type) as listed in the table below, who shall certify that the plans comply with these regulations and criteria contained in the swimming pool design policies.

PROJECT TYPE	R.O.C. LICENSE REQUIRED
Any and all projects, all new construction	A-9, A-19, KA-5, KA-6
Safety vacuum release system, plumbing and equipment replacement	K-37, K-77, L37, L-77
Resurface and drain split/plumbing	A-9, A-19, KA-5, KA-6
Deck replacement only	K-9, L-9
Fence only	As required by Arizona Registrar of Contractors

f. All work shall conform to approved plans and specifications. Should it be necessary or desirable to make any changes in the approved plans and specifications of the proposed work, revised plans and specifications, together with a written statement of the reasons for such change, shall be submitted to the Department for review. The Application for Approval to Construct must be obtained in writing before the work affected by the change is undertaken.

g. The Department will, upon receipt from the applicant of reasonable advance notice of readiness to, make necessary inspections to determine that the pool piping system, and thereafter the complete pool circulation, purification, and waste systems are in compliance with these regulations. The piping system shall be left open and exposed until the Department has examined and approved the system in writing. The complete pool, including circulation, purification and waste systems shall be deemed acceptable only after examination and issuance of written approval of construction by the Department.

h. The design, operation and maintenance of bathing places shall be in conformance with these regulations and criteria contained in the Department swimming pool design policy.

i. Before Approval of Construction shall be given for the operation of a bathing place, the swimming pool contractor or a currently registered engineer or architect shall certify that the completed bathing place is constructed in accordance with the approved plans and specifications.

REGULATION 3. Permit Required

No public or semipublic bathing place shall be maintained or operated in Maricopa County without a valid operating permit issued by the Department. The permit shall be displayed in a conspicuous place on the premises where the public may readily observe it. No permit shall be issued until the applicable permit fee has been rendered. Permit fees are listed in Chapter I, Regulation 5 of the Environmental Health Code. If the operating permit for a bathing place is determined by the department to be invalid due to permit revocation or the permit has been allowed to lapse for a period greater than (1) year, the bathing place shall comply with the current Environmental Health Code in order to qualify for an operating permit

REGULATION 4. Instructions

Before entering a pool, all persons shall be instructed, by means of suitable, clearly lettered signs properly located, to observe all safety regulations. The signs shall contain, at a minimum, all of the following:

a. Persons with sore or inflamed eyes, colds, nasal or ear discharges, boils or other acute or obvious skin or body infections, or cuts shall be excluded from the pool.
b. No glassware allowed within the pool enclosures**.**
c. No animals allowed except for service animals.
d. No drinks, candy, tobacco, popcorn, gum, alcohol, or food of any kind shall be permitted in the pool or within the required walkways of the pool
e. Keep gate(s) closed – do not prop open.
f. Shower and use the toilet before entering the pool.
g. If incontinent, wear tight fitting rubber or plastic pants or a swim diaper.
h. Observe all safety regulations.

REGULATION 5. Attire and Towels, etc.

a. Bathing attire, towels, linens and similar articles shall be clean, dry and sanitary when provided to patrons.
b. The provision of towels, drinking cup, combs, hairbrushes, soap and other similar items for use in common by the public is prohibited.

REGULATION 6. Excluded

Persons with sore or inflamed eyes, colds, nasal or ear discharges, boils or other acute or obvious skin or body infections, or cuts shall be excluded from the pool. No person in or at a swimming pool shall commit, or be permitted to commit, any act prejudicial to the life or health of any other person using the pool. Animals shall be excluded from the pool enclosure, except for service animals. All animals shall be excluded from bathing in the pool.

REGULATION 7. Drinking Water

Drinking water from an approved source and dispensed through one (1) or more drinking fountains shall be located on the deck of each public swimming pool or spa.

REGULATION 8. Concessions

No drinks, candy, tobacco, popcorn, gum, alcohol, or food of any kind shall be permitted in the pool or within ten (10) feet of a public bathing place or within four (4) feet of a semipublic bathing place.

a. No food or drink of any kind shall be allowed in the pool or within the required walkways of the bathing place.
b. Food and drink will be allowed within the pool enclosure but outside the area noted in Chapter VI, Section 1, Regulation 8, a., provided that only paper or plastic service is used. No glass is permitted within the pool or spa enclosure.

REGULATION 9. Operation

All bathing place facilities shall at all times be operated and maintained in a clean, safe and sanitary condition. The owner of a bathing place shall close that facility if any of the following conditions exist**:**

1. Absence of an approved disinfectant;
2. Violation of the physical standards of Section 2, Regulation 5;
3. Filtration system is inoperative;
4. Mechanical disinfectant feeder is missing, inoperative, or malfunctioning;
5. Broken or missing main drain covers or other suction outlet covers;
6. When required, lifeguards are not present or the required number of lifeguards is not present;

7. Gates are not self-closing and self-latching or there is a breach of the pool enclosure;
8. Leaking gas chlorinator;
9. Absence of all safety equipment;
10. Electrical wires over the pool;
11. Broken glass in the pool area;
12. Any other operational condition which may cause injury or present a danger to the public health.

REGULATION 10. Violations

Any person, firm, or corporation who builds, offers for sale or operates a bathing place contrary to these regulations shall be subject to prosecution as provided by law.

REGULATION 11. Retroactive Provisions

Permitted pools that were constructed prior to the effective date of this code shall meet the operational requirements of this code as listed in Chapter VI, Section 1, Regulation 9 and the Structural Provisions in Chapter VI, Section 1, Regulation 12.

REGULATION 12. Retroactive Structural Provisions

a. Retroactive main drain requirements:
   1. The owners of all public and semipublic swimming pools, which were under a valid operating permit on the effective date of this Environmental Health Code and equipped with a single main drain, shall:
      (a) Install a properly sized anti-vortex, anti-entrapment drain cover that complies with ANSI/ASME A112.19.8M, "*Suction Fittings for Use In Swimming Pools, Spas, Hot Tubs And Whirlpool Bathtub Appliances*" on all suction outlets by May 1, 2004.
      (b) Install a hydraulically balanced dual main drain at the time the pool is resurfaced. If the pool or spa is not resurfaced and hydraulically balanced dual main drains are not installed, the owner shall install a Safety Vacuum Release Device (SVRD) or Safety Vacuum Release System (SVRS) that meets ANSI/ASME A112-19 Standards or equivalent by January 1, 2014.
      (c) Install other devices or means as approved by the Department by no later than January 1, 2014.

b. Retroactive fencing requirements for public pools:
   1. Public swimming pools, special use pools, spas and wading pools who hold a valid operating permit on the effective date of this code that meet the requirements in Appendix C and shall comply with fencing requirements in Chapter VI, Section 6, Regulation 11 by January 1, 2014.
   2. Public swimming pools, special use pools, spas and wading pools who hold a valid operating permit on the effective date of this code that do not meet the requirements in Appendix C on the effective date of this code shall comply with

fencing requirements in Chapter VI, Section 6, Regulation 11 by January 1, 2005.

c. Retroactive fencing requirements for Semipublic pools:

1. Semipublic swimming pools, special use pools, spas and wading pools who hold a valid operating permit on the effective date of this code that meet the requirements in Appendix D on the effective date of this code shall comply with fencing requirements in Chapter VI, Section 7, Regulation 2 by January 1, 2014.
2. Semipublic swimming pools, special use pools, spas and wading pools who hold a valid operating permit on the effective date of this code that do not meet the requirements in Appendix D on the effective date of this code shall comply with fencing requirements in Chapter VI, Section 7, Regulation 2 by January 1, 2005.

d. Retroactive diving board requirements:

All public and semipublic swimming pools and special use pools who hold a valid operating permit on the effective date of this code, constructed prior to February 1, 1998, and having met the requirements of the code for a diving board in force at the time of construction may continue to operate a diving facility under the following conditions:

1. The pool was approved for construction prior to February 1, 1998.
2. The height of the diving board above the water surface shall be limited to a maximum of ten (10) feet (three (3) meters).
3. If the pool and diving board do not meet the dimensional requirements in Appendix A or Appendix B, diving must be under the direct supervision of a lifeguard or other responsible party and the pool owners shall provide and maintain on file with Maricopa County a current certificate of publicliability insurance documenting minimum limits of seven million dollars ($7 million) combined single limit for bodily injury and property damage liability. The certificate must further clearly indicate that Maricopa County is an additional insured and that no changes or modifications shall become effective in the coverage without 30 days prior written notice submitted to the Department.

e. Retroactive vacuum outlet requirements:

Public and semipublic swimming pools, special use pools, spas, and wading pools that hold a valid operating permit on the effective date of this code shall comply with Chapter VI, Section 3, Regulation 9 by January 1, 2005.

REGULATION 13. Variance

a. Purpose

The purpose of this regulation is to allow the Environmental Health Officer to consider granting a variance from those parts of Chapter VI, which are more restrictive than AAC R18-5-2 and/or AAC R9-8-8**.** This would be possible when there exists an unusual or unreasonable hardship resulting from a literal interpretation of this Code, provided that the alternative method or work offered conforms to the general intent of this Code. The application for variance and the decision of the Environmental Health Officer shall be in writing and shall be officially recorded within the records of the Department.

b. Conditions for Variance

1. Any person may request a Variance to Chapter VI of this Code when it is claimed that:
   (a) The true intent of the Codes or Ordinances described in this Code has been incorrectly interpreted by the Department; or
   (b) A decision by the Department is unreasonable or arbitrary when it is applied to alternate or new materials.
2. The Swimming Pool Advisory Committee may recommend that the Environmental Health Officer issue a Variance only after the Committee has determined that:
   (a) Special circumstances or conditions apply to this permit application; and
   (b) Authorizing of the Variance is necessary for the preservation and enjoyment of substantial property rights; and
   (c) Authorizing of the variance will not be materially detrimental to persons residing or working in the vicinity, to adjacent property, to the neighborhood or to the public safety and welfare in general; and
   (d) Granting of the variance will be in harmony with the purposes sought to be attained by the Codes or Ordinances.
3. If the applicant for the variance is dissatisfied with the decision of the Environmental Health Officer, the applicant may appeal to the Board of Health whose decision shall be final, except that any person aggrieved by a decision of the Board of Health may at any time, within 30 days after the filing of the Board of Health's decision, file an appeal with the Superior Court of Maricopa County by following the various methods of appeal or review procedures in Arizona as set forth in the applicable statutes of the State of Arizona.
4. Such appeals shall be presented to the Secretary of the Board of Health in writing within 30 days after the filing of the decision of the Environmental Health Officer or the Environmental Health Officer may refer the appeal to the committee.

c. Swimming Pools Advisory Committee (SPAC)

1. Structure:
   (a) There shall be and is hereby created, a Swimming Pool Advisory Committee, hereinafter called "Committee", consisting of five members, who are residents of Maricopa County and citizens of the United States, and composed of and consisting of a representative of the industries, trades, and professions as follows:
      (1) Swimming Pool Building Contractor
      (1) Swimming Pool Service and Repair Contractor or Swimming Pool Industry Member
      (1) Certified Safety Professional
      (1) Professional Engineer
      (1) Health Professional
   (b) The members of the Committee shall be appointed by the Chairperson of the Board of Health for a term of three (3) years. The initial terms of office shall be as follows:
      (i) One member shall be appointed for a term of three (3) years;

(ii) Two members for a term of two (2) years;
(iii) Two members for a term of one (1) year.

(c) Upon expiration of the initial term of office of a member of the Committee, their successors shall then be appointed for a term of three (3) years.

(d) Continued absence of any member from three (3) consecutive regular meetings of the Committee shall render any such member liable for immediate removal from office. Removal shall be at the discretion of the Board of Health.

(e) Vacancies for an unexpired term shall be filled by the Chairperson of the Board of Health.

(f) The members of the Committee shall serve without salary or compensation.

(g) The Environmental Health Officer or his designate shall attend all meetings and furnish secretarial services for the Committee.

2. Duties and Responsibilities:

(a) It shall be the duty of the Committee to hear appeals from the decision of the Department staff and to submit findings to the Environmental Health Officer.

(b) The duties and powers of this Committee shall be in an advisory capacity only.

3. Procedures:

(a) The Committee shall annually elect one (1) of its members to serve as Chairperson.

(b) The Environmental Health Officer shall designate an administrative support from the Department to serve as Recording Secretary to the Committee, who shall keep a detailed record of all proceedings on file in the Department and perform other secretarial duties as required by the Board.

(c) Special Committee meetings may be called by the Environmental Health Officer or at the request of the Chairperson or any three (3) members of the Committee.

(d) Three (3) voting members of the Committee shall constitute a quorum.

(e) Public Hearings:

(i) Any person dissatisfied with a decision of the Department staff may request a hearing before the Committee at any time prior to closure of the file. The Environmental Health Officer may call a special meeting to hear this matter. Such a meeting shall be held within thirty (30) days of the date the appeal is filed.

(ii) All hearings shall be open and public and any person whose interest may be affected by a recommendation of the Committee shall be given an opportunity to be heard.

(iii) The Committee shall render all recommendations in writing to the Environmental Health Officer. The Environmental Health Officer

shall render a final decision within ten (10) days of receiving the Committee recommendations.

(iv) The applicant may waive a hearing by the Committee and appeal directly to the Environmental Health Officer. The Environmental Health Officer will in such cases render a decision within ten (10) days of the date that the appeal is filed.

(v) The applicant shall include a fee with the written Swimming Pool Advisory Committee appeals as shown in the Fee Schedule in Chapter I of this Code.

(f). Conflict of Interest:
No member of the Committee shall vote on any question concerning a job or project in which that member is engaged as contractor or material dealer, or in the preparation of plans or specifications, or on any job or project in which that member has any direct or indirect personal or financial interest. In these instances, that member shall also make full disclosure of his or her interest to the Committee.

REGULATION 14. Inspections

a. An inspector from the Department, upon presentation of credentials, may enter into any public or semipublic swimming pool or spa to determine compliance with this code. The inspector may inspect records, equipment and facilities, take photographs and take other action reasonably necessary to determine compliance with this Code.

b. The owner or manager of a public or semipublic swimming pool or spa may accompany the inspector during an inspection.

c. An inspector from the Department may inspect a public or semipublic swimming pool or spa during reasonable working or operational hours without giving prior notice of the inspection to the owner or operator of the swimming pool or spa.

REGULATION 15. Applicability

a. This code applies to all public and semipublic bathing places included in Chapter VI (Bathing Places - Public and Semipublic Swimming Pools) of Maricopa County Environmental Health Code.

b. Section 11 of this code applies to natural and semi-artificial bathing places.

c. Section 12 of this code applies to artificial bathing lakes.

d. This code does not apply to any of the following:

1. A private residential swimming pool or spa;
2. A swimming pool or spa used for medical treatment or physical therapy and supervised by licensed medical personnel;
3. Swimming pools and spas constructed and operated by the State of Arizona;
4. Swimming pools and spas constructed and operated by the United States government; or
5. A spray pond that utilizes potable water and does not have a recirculation system.

MARICOPA COUNTY ENVIRONMENTAL HEALTH CODE

CHAPTER VI

BATHING PLACES - PUBLIC AND SEMIPUBLIC SWIMMING POOLS

SECTION 2

WATER QUALITY STANDARDS

REGULATION 1. Quality of Water

Swimming pool water shall be treated and maintained so that whenever the swimming pool is open for use, the bacterial, chemical and physical quality of the water meets the standards set forth in these regulations.

REGULATION 2. Water Source

An operator of a public or semipublic swimming pool or spa shall ensure that the swimming pool or spa is filled only with potable water from an approved source.

REGULATION 3. Bacterial Standards

Not more than 15 percent (15%) of the water samples collected from a pool shall:

a. Contain more than 200 bacteria per milliliter as determined by the standard (35°C [95ºF]) agar plate count, or

b. Show a confirmed positive test for coliform organisms in any of the five (5) - ten (10) milliliter portions of a sample or more than one (1) coliform organism per 50 milliliters when the membrane filter test is used. All samples shall be collected, de-chlorinated, or similarly neutralized when another disinfectant is used, and examined in accordance with the procedures outlined in the latest edition of "Standard Methods for the Examination of Water and Wastewater". The Department may collect, or require the owner to collect and submit water samples for bacteriological examination on a routine basis while it is in active use.

REGULATION 4. Chemical Standards

Pools and spas shall be continuously disinfected by an approved means, which will maintain an adequate and readily measurable residual of disinfectant in the water.

a. Whenever chlorine, or a chlorine compound, is employed for pool disinfection the amount of free chlorine residual in the water shall not be less than 1.0 ppm or more than 5.0 ppm for public and semipublic swimming pools, and shall not be less than 3.0 ppm or more than 5.0 ppm for a hydrotherapy pool, at a pH of 7.2 to 7.8.

b. Bromine disinfection equipment for a public or semipublic swimming pool shall be designed to maintain a bromine residual of 2.0 ppm to 4.0 ppm. Bromine disinfection

equipment for a public or semipublic spa shall be designed to maintain a bromine residual of 3.0 ppm to 5.0 ppm.

c. Total alkalinity shall be maintained between 60 ppm and 180 ppm**.**
Whenever chlorinated isocyanurates or isocyanuric acid is applied to the water for stabilization, a level of 100 ppm or less shall be maintained. The procedure for determination of free chlorine residual shall be by the DPD method or any of the other procedures outlined in the latest edition of "Standard Methods for Examination of Water or Wastewater".

REGULATION 5. Physical Standards

a. The surface of the pool water shall be kept free of scum and floating debris. The bottom and sides shall be maintained free of sediment, dirt, slime and algae. Water shall be maintained free of turbidity and shall be sufficiently clear so that the main drain outlet is clearly visible to an adult standing on the pool deck, or that a Secchi Disk 200 mm in diameter when placed at the bottom of the pool at the deepest point is clearly visible to an adult standing on the pool deck.

b. The temperature of heated water coming into a bathing place shall not exceed 104°F (40°C).

REGULATION 6. Tests

All pools shall be equipped with approved test equipment to determine pH, disinfectant residual, total alkalinity and temperature. The chemical disinfection level, pH, total alkalinity, and temperature of the water shall be tested at least once daily and an operating log that includes the results of these tests shall be maintained for 12 months and made available to the Department, any other regulatory authorities, or a member of the public upon request.

REGULATION 7. Fecal Contamination in Public and Semipublic Swimming Pools and Spas

a. If solid feces are found in a public or semipublic swimming pool or spa, an operator of the swimming pool or spa shall ensure that:
   1. Each individual in the swimming pool or spa is required to exit the swimming pool or spa and the swimming pool or spa is closed,
   2. The feces in the swimming pool or spa are removed and disposed of in a toilet;
   3. The chemical disinfection level of the water in the swimming pool or spa is tested to determine whether the water complies with the water quality and disinfection standards in Section 2, Regulation 4; and
   4. The swimming pool or spa is not reopened until a test conducted under Subsection a., 3. indicates that the water complies with the water quality and disinfection standards in Section 2.

b. If liquid feces are found in a public or semipublic swimming pool or spa, an operator of the swimming pool or spa shall ensure that:
   1. Each individual in the swimming pool or spa is required to exit the swimming pool or spa and the swimming pool or spa is closed;
   2. The swimming pool or spa is closed for at least 24 hours;

3. As much of the liquid feces as possible in the swimming pool or spa is removed and disposed of in a toilet;
4. The swimming pool or spa is chemically treated with a shock treatment;
5. The water in the swimming pool or spa is tested 24 hours after applying the shock treatment to determine whether the water complies with the water quality and disinfection standards in Section 2; and
6. The swimming pool or spa is not reopened until a test conducted under Subsection b., 5. indicates that water complies with the water quality and disinfection standards in Section 2, Regulation 4.

MARICOPA COUNTY ENVIRONMENTAL HEALTH CODE

CHAPTER VI

BATHING PLACES - PUBLIC AND SEMIPUBLIC SWIMMING POOLS

SECTION 3

GENERAL DESIGN STANDARDS AND SPECIFICATIONS

REGULATION 1. Materials

a. A public or semipublic swimming pool or spa shall be constructed of concrete or other structurally rigid material that is equivalent in strength and durability to concrete, except that a public or semipublic spa may be constructed of fiberglass or acrylic.

b. A surface within a public or semipublic swimming pool or spa intended to provide footing for users shall have a slip-resistant surface. The roughness or irregularity of the surface shall not cause injury or discomfort to users' feet during normal use.

c. The materials and construction of a public or semipublic swimming pool shall be sound, durable and, where required, waterproof. The pool shall be constructed of materials that are rigid, nontoxic, smooth, free from cracks, easily cleanable and finished in white, pastel or other light colors. The color, pattern or finish of the interior of a public or semipublic swimming pool or spa shall not obscure objects, surfaces within the swimming pool or spa, debris, sediment or algae. Corners shall be rounded. Pool linings, specifically plastic and similar linings, and finishes not totally bonded to the pool sides and bottom are prohibited.

REGULATION 2. Shape

a. A public or semipublic swimming pool or spa may be any shape except that the designer shall shape a public or semipublic swimming pool or spa to minimize hazards to users and provide adequate circulation of swimming pool or spa water.

b. There shall be no protrusions, extensions, means of entanglement or other obstructions in a public or semipublic swimming pool or spa that may cause entrapment of or injury to the user. This subsection does not prohibit water features such as water fountains, slides, water play equipment or water volleyball and basketball nets.

c. Where a racing lane terminates in a swimming pool, the wall shall be plumbed to a minimum depth of five (5) feet below the waterline. Below the five (5)-foot depth, the wall shall be radiused to join the floor.

d. The minimum average width of a semipublic pool shall be 14 feet. The average width shall be calculated by dividing the surface area by the total length of the pool as noted in Appendix B.

e. Coping or cantilevered deck may project from a swimming pool or spa wall to provide a handhold for users. The coping or deck shall be rounded, have a slip-resistant surface and shall not exceed three and one-half (3½) inches in thickness. The overhang of the coping or deck shall not exceed two (2) inches or be less than one (1) inch. All corners created by coping or cantilevered deck shall be rounded in both the vertical and horizontal dimensions to eliminate sharp corners.

f. Floors:

1. The slope of the floor of a public or semipublic swimming pool, from the end wall in the shallow area towards the deep area to the point of the first slope change, shall be uniform and shall not exceed one (1) foot of fall in ten (10) feet. The floor slope in a public or semipublic spa shall not exceed one (1) foot of fall in ten (10) feet.

2. The floor slope of a public or semipublic swimming pool, from the point of the first slope change to the deepest part of the swimming pool, shall not exceed one (1) foot of fall in three (3) feet.
For public or semipublic swimming pools, the depth of the swimming pool at the point of the first slope change shall be a minimum of five (5) feet.

3. All portions of a swimming pool or spa floor shall slope towards a main drain.

4. The transitional radius where the floor of a public or semipublic swimming pool joins a wall shall comply with all the following:

(a) The center of the radius shall be no less than three (3) feet below the waterline in the deep area or two (2) feet below the waterline in the shallow area,

(b) The radius shall be tangent at the point where the radius meets the wall or floor, and

(c) The radius shall be equal to or greater than the depth of the swimming pool minus the vertical wall depth measured from the waterline minus three (3) inches.

REGULATION 3. Fill and Draw Pools

The construction and operation of fill and draw pools is prohibited.

REGULATION 4. Water Recirculation and Filtering System

General - The water recirculation system, consisting primarily of piping, pumps, filters, water conditioning and disinfecting equipment, together with other standard accessory equipment, shall be adequate to clarify and disinfect the entire contents of the pool within eight (8) hours or less. Water withdrawn shall not be returned to the pool unless it has been filtered and otherwise treated in an approved manner except that water may be withdrawn from a swimming pool for a water slide or a water feature without being filtered or disinfected as approved by the Department.

a. The water recirculation system shall consist primarily of piping, pumps, filters, water conditioning and disinfecting equipment, together with other standard accessory equipment. Each bathing place shall be provided with a separate and distinct recirculation system.

b. The water recirculation system shall be adequate to filter and disinfect the entire contents of the pool within eight (8) hours or less. Bypassing chemical feeders or other similar devices may be exempted from this requirement with the approval of the Department.

c. The water recirculation system shall operate continuously.

d. Seasonal closing of the pool shall be allowed when all of the following exist:

   1. A sign is posted that the pool/spa is closed;
   2. The gates are locked shut, and
   3. The Department is notified in writing of any such closure.

REGULATION 5. Piping

Piping systems shall be:

a. Designed to carry the required quantity of water at a velocity of not more than ten (10) feet per second when located on the discharge side of a pump, except for copper discharge piping where the velocity shall not exceed eight (8) feet per second, and not more than six (6) feet per second when located on the suction side of a pump.

b. Of sufficient strength to withstand 150 percent of normal operating pressures.

c. Made of non-toxic materials.

d. Reasonably resistant to corrosion under conditions of operation.

e. Installed so that pipe and fittings, which pass through the pool structure, shall not project in a manner, which is hazardous to users of the facility.

f. Comply with the sizes and flow rates shown in the following table unless accompanied by an approved hydraulic design.

Maximum Flow Rates (C=140) Schedule 40 PVC

PIPE SIZE	1 1/4"	1 1/2"	2"	2 1/2"	3"	4"	6"
GPM PRESSURE SIDE	25	60	90	140	220	350	800
GPM PRESSURE SIDE, COPPER	20	48	72	96	176	280	640
GPM SUCTION SIDE	15	35	50	80	140	220	450

g. Plastic water circulation piping shall comply with American National Standards Institute/NSF, International Standard Number 14, "Plastics Piping System Components and Related Materials," NSF International, 3475 Plymouth Road, P.O. Box 130140, Ann Arbor, Michigan which is incorporated by reference and on file with the office of the Secretary of State and the Department.

h. A licensed Arizona contractor shall conduct an induced static hydraulic pressure test of the water circulation system piping at 25 pounds per square inch for at least 30 minutes. The pressure test shall be performed before the deck is poured. Pressure in the water circulation system piping shall be maintained during the deck pour.

i. Piping systems shall be identified by nametags, labels or appropriate colors painted or located at conspicuous points.

REGULATION 6. Total Dynamic Head

The total dynamic head of the recirculation system shall be calculated. In lieu of calculating the total dynamic head, the Department may allow the following table to be used:

DISTANCE FROM THE MAIN DRAIN TO THE PUMP	TOTAL DYNAMIC HEAD (TDH)
1' – 25'	55
26' – 50'	60
51' – 75'	65
76' –100'	70
101' – 125'	75
126' – 150'	80
BEYOND 150'	CALCULATIONS ARE REQUIRED

REGULATION 7. Pumps and Motors

a. A pump and motor shall be provided for each water circulation system. The pump shall be sized to meet but not to exceed the flow rate required for filtering against the total head developed by the complete water circulation system. The pump shall be sized to comply with the turnover rates prescribed in Chapter VI, Section 3, Regulation 4 (Pools), Chapter VI, Section 9, Regulation 2 (Spas), and Chapter VI, Section 8, Regulation 4, (Wading Pools).

b. Pumps and motors shall be readily and easily accessible for inspection, maintenance, and repair. When the pump is below the waterline, valves shall be installed on permanently connected suction and return lines. The valves shall be readily and easily accessible for maintenance and removal for any of the circulation components.

c. Each motor shall have an open, drip-proof enclosure. Each motor shall be constructed electrically and mechanically to perform satisfactorily and safely under the conditions of load in the environment normally encountered in swimming pool or spa installations. Each motor shall be capable of operating the pump under full load with a voltage variation of plus or minus ten (± 10%) percent from the nameplate rating. Each motor shall have thermal or current overload protection to provide locked rotor and running protection. Thermal or current overload protection may be built into the motor or in the line starter.

d. The pump shall be equipped with an emergency shut-off switch that is located within the swimming pool or spa enclosure to cut off power to the water circulation system if someone is entrapped on a main drain or suction outlet.

e. The emergency shut-off switch must be clearly labeled.

REGULATION 8. Hair Strainer

The recirculation system shall include a removable strainer located upstream from the pump to prevent solids, debris, hair, lint, etc. from reaching the pump and filters. Strainers shall be of corrosion-resistant material, with openings having a total area equal to four times the area of the recirculation pump suction pipe.

REGULATION 9. Pool Water Cleaning System

a. A pool vacuum cleaning system shall be provided for public and semipublic swimming pools with the exception of hydrotherapy pools.

b. Vacuum outlets shall be provided with covers, which automatically close and automatically latch and can only be opened with the use of a tool. The covers must be securely closed and latched when the pool is in use.

c.

d. The cleaning system provided shall not create a hazard or interfere with the operation or use of the pool. In integral systems, connections shall be provided in sufficient numbers and located in the pool walls at least ten (10) inches below the water line. In addition, automatic or self-cleaning systems may be installed as approved by the Department.

REGULATION 10. Inlets

Adjustable pool wall inlets shall be provided on all pools. Inlets shall be of sufficient number, properly designed, sized and installed to produce uniform circulation throughout the pool. There shall be a minimum of six (6) inlets, spaced not more than 15 feet apart as measured along the pool periphery. At least one (1) inlet shall be located within five (5) feet of each corner and in each step alcove. Inlets shall be on a closed loop piping system. Where the width of the pool exceeds 30 feet, bottom returns will also be required. Bottom returns shall be flush with the pool bottom or of such design as to prevent injury to bathers. Bottom returns will be considered to have an area of influence described by a radius of 15 feet. Public or semipublic spas with three (3) or more return inlets shall be on a closed loop piping system.

REGULATION 11. Drains

a. Pools shall be equipped with at least two (2), main drains located in the deepest portion with centers at least three (3) feet apart and that are constructed to prevent suction entrapment under all operating conditions. Each drain shall be covered by an anti-vortex cover or an approved grate that has a minimum diagonal measurement of 24 inches, which is not readily removable by bathers and has safe openings of at least four (4) times the area of the drain pipe. Each drain pipe connection shall be under the center of the drain cover.

b. Drains shall be spaced at intervals of not greater than one (1) each 20 feet of pool width in the deepest portion and not more than 15 feet from each side wall**.**

c. A minimum of two (2) suction outlets shall be provided for each pump in a suction outlet system for a public or semipublic pool or spa. The suction outlets shall be separated by a minimum of three (3) feet or located on two (2) different planes (i.e. one suction outlet on the bottom and one (1) on a vertical wall or one (1) suction outlet each on two (2) separate vertical walls) as long as the three (3) foot separation is always maintained. The suction outlets shall be plumbed to draw water through them simultaneously through a common line to the pump. Suction outlets shall be plumbed to eliminate the possibility of entrapping suction, and be equipped with an approved anti-vortex cover.

d. The total velocity of water through grate openings of the drain shall not exceed one and one-half (1 1/2) feet per second.

e. No check valve may be installed between a suction outlet and a pump.

REGULATION 12. Flow Meter

A public swimming pool shall be equipped with a flow meter that indicates the rate of backwash through the filter. The flow meter shall be installed between the pump and the filter on a straight section of pipe in accordance with the manufacturer's specifications in a location where it can be read easily. The flow meter shall measure the rate of flow through the filter in gallons per minute and shall be accurate to within five (5) percent under all conditions of flow. The flow meter shall have an indicator with a range of at least 150 percent of the normal flow rate.

REGULATION 13. Sight Glass

Pressure filter systems shall be equipped with a sight glass installed on the waste discharge pipe.

REGULATION 14. Air Relief Valves

Pressure-type filters shall be equipped with a means to release internal pressure. Each pressure filter shall be equipped with an air relief piping system connected at an accessible point near the crown. Automatic air relief systems may be used instead of manual systems. The design of a filter with an automatic air relief system as its principal means of air release shall include lids that provide a slow and safe release of pressure. The design of a separation tank used in conjunction with any filter tank shall include a manual means of air release or a lid which provides a slow and safe release of pressure as it is opened.

REGULATION 15. Access to Equipment

Filters shall be designed, located and constructed to permit removal of filter manhole covers or heads for inspection purposes and replacement or repair of the filter elements or media. No filter or filtration system shall be installed beneath the surface of the ground or within any enclosure without adequate provision of access for inspection and maintenance.

REGULATION 16. Filtration Rate - Sand

The rate of filtration in high-rate sand filters shall not exceed an equivalent of 20 gallons per-minute per-square foot. Sufficient surface area of filter media shall be provided to achieve this rate.

REGULATION 17. Filtration Rate - Diatomaceous Earth

The rate of filtration of diatomaceous earth filters shall not exceed two (2) gallons per-minute per-square foot of effective surface area.

REGULATION 18. Filtration Rate - Cartridge Type

The rate of filtration of cartridge filters shall not exceed 0.375 gallons per-minute per-square foot.

REGULATION 19. Acceptable Filters

Swimming pool and spa filters shall comply with American National Standards Institute/NSF International Standard Number 50, "Circulation System Components and Related Materials for Swimming Pools, Spas / Hot Tubs," NSF International, 3475 Plymouth Road, P.O. Box 130140, Ann Arbor, Michigan. Filters shall be designed, located, and constructed to permit removal of filter manhole covers or heads for inspection, replacement or repair of filter elements or filter media. No filtration system shall be installed beneath the surface of the ground or within an enclosure without providing adequate access for inspection and maintenance. The maximum filtration rate shall not exceed the design flow rate prescribed by the ANSI/NSF Standard 50 for Commercial Filters. In no case shall the maximum filtration rate exceed the rates specified in this section.

REGULATION 20. Gauges

Pressure gauges shall be installed on the inlet side of the pump, and the inlet and outlet manifold of the filters. Such gauges shall read at one (1) pound pressure intervals or in inches of mercury/vacuum.

REGULATION 21. Cross Connection Control

a. Cross-connections between potable water piping and the recirculation system or water reservoir of any pool are prohibited. Potable water for make up water purposes may only be introduced into the reservoir:

   1. Across an air gap of at least twice the diameter of the pipe, not less than six (6) inches above the overflow level. If an over-the-rim spout is used, it shall be located so that it does not present a tripping hazard**;** or

   2. Three (3) inches above the overflow rim of a float controlled make up water feed tank; or

   3. By a submerged inlet which is properly protected against back siphonage by a backflow prevention device meeting University of Southern California Foundation for Cross Connection Control and Hydraulic Research.

b. All sewage from plumbing fixtures, including urinals, toilets, lavatories, showers, drinking fountains, floor drains and other sanitary facilities shall be disposed of in a sanitary manner. Filter backwash and wasted swimming pool or spa water shall be discharged into a sanitary sewer through an approved air gap, an approved subsurface disposal system or by other means that are approved by the Department. The method of disposal shall comply with applicable disposal requirements established by a municipal or other local authority. There shall be no direct physical connection between the sewer system and the water circulation system of a public or semipublic swimming pool or spa.

REGULATION 22. Signs

a. Diving equipment is prohibited in a public or semipublic swimming pool that does not meet the minimum requirements for a diving board in Section 6, Regulation 6, of this code. If a public or semipublic swimming pool does not meet the dimensional requirements prescribed in Section 6, Regulation 6 of this code for diving, the owner shall prominently display at least one (1) sign that cautions users of the swimming pool that diving is prohibited. The warning sign shall state "CAUTION SHALLOW WATER NO DIVING" in letters that are four (4) inches or larger or display the international symbol for no diving. Diving from the deck of a public or semipublic swimming pool into water that is less than five (5) feet deep shall be prohibited. Warning markers indicating in words or symbols that diving is prohibited shall be placed on the deck, adjacent to each water depth marker, within 18 inches of the side of the shallow area of the swimming pool. A warning marker shall be positioned so that a person standing on the deck facing the water can read it.

b. All persons shall be instructed before entering the pool, by means of suitable, clearly lettered signs properly located, to observe all safety regulations.

c. The maximum bathing load for a public or semipublic swimming pool or spa shall be posted.

d. When food preparation or food service equipment is allowed within the pool enclosure, a sign is required stating that no glass is allowed in the pool enclosure, that only paper and plastic service is allowed, and that no food or drink is allowed within four (4) feet of a semipublic pool or spa edge or ten (10) feet of a public pool or spa edge.

REGULATION 23. Roof Drain Water

Rain water draining from any structure must be diverted away from the swimming pool and pool deck to a suitable point of disposal.

SECTION 4

WATER CIRCULATION, DISINFECTION AND CHEMICAL CONDITIONING

REGULATION 1. Water Circulation System

a. A public or semipublic swimming pool or spa shall have a water circulation system that provides complete circulation of water through all parts of the swimming pool or spa and can maintain water chemistry and water clarity requirements.

b. The water circulation system for a public or semipublic swimming pool shall have a turnover rate of at least once every eight (8) hours. The water circulation system of a public or semipublic spa shall have a turnover rate of at least once every 30 minutes. The water circulation system for a wading pool shall have a turnover rate of at least once every one (1) hour. The water circulation system shall be designed to give the proper turnover rate without exceeding the maximum filtration rate for the filter.

c. Water circulation system components shall comply with American National Standards Institute/NSF International Standard Number 50, "Circulation System Components and Related Materials for Swimming Pools, Spas / Hot Tubs," NSF International, 3475 Plymouth Road, P.O. Box 130140, Ann Arbor, Michigan which is incorporated by reference and on file with the office of the Secretary of State and the Department.

d. Water circulation system components shall be accessible for inspection, repair, or replacement.

e. Water withdrawn from a public or semipublic swimming pool or spa shall not be returned unless it has been filtered and adequately disinfected except that water may be withdrawn from a swimming pool for water slide(s), water feature(s), or a water fountain(s) without being filtered or disinfected as approved on a case-by-case basis by the Department.

f. In a swimming pool complex with more than one (1) swimming pool or where there is a combination of swimming pools and spas, each swimming pool and spa shall have a separate water circulation system.

g. Hydrotherapy jets or other devices which create roiling water or similar effects in a spa shall not be connected to the water circulation system, but shall be operated through a separate system.

REGULATION 2. Disinfecting Agents

Effective water disinfection shall be provided and maintained in all pools. This shall be accomplished by chlorination or other approved methods which will effectively maintain an adequate, amount of the disinfectant introduced into the water which is subject to field testing by methods that are easy to use and accurate. Timers on disinfection equipment are prohibited. The addition of dry or liquid disinfectant directly into a public or semipublic swimming pool or spa

for routine disinfection is prohibited. This prohibition does not prohibit the use of liquid or dry disinfectants for shock treatment of a swimming pool or spa.

REGULATION 3. Gaseous Disinfectants

When gaseous chlorine is used, the following additional features shall be provided:

a. The chlorinator, chlorine cylinders and associated chlorination equipment shall be located in a separate well-ventilated enclosure at or above ground level. The enclosure shall be reasonably gas-tight, noncombustible and corrosion-resistant. The door of the enclosure shall open to the outside and shall not open directly toward the swimming pool.

b. If chlorination equipment is placed in a room, then an exhaust fan or gravity ventilation system shall be provided. Mechanical exhausters shall take suction six (6) inches or less above the floor and discharge through corrosion-resistant louvers to a safe outside location. A gravity ventilation system shall be designed and constructed to discharge to the outside from floor level. Fresh air intakes shall be located no closer than three (3) feet above the ventilation discharge. Chlorine room exhausts shall be directed away from the swimming pool to an area, which is normally unoccupied. Chlorine room fans shall be capable of completely changing the air in the room at least once per minute.

c. Electrical switches to control lighting and ventilation in the chlorine room shall be located on the outside of the enclosure and adjacent to the door.

d. Chlorine cylinders shall be kept in an upright position and securely anchored to prevent them from falling. Chlorine cylinders may be stored indoors or outside. If stored outside, chlorine cylinders shall not be stored in direct sunlight. Chlorine cylinders shall not be stored near an elevator, ventilation system or heat source.

e. A warning sign shall be placed on the outside of the door to the chlorine room, which cautions persons of the danger of chlorine gas within the enclosure. The warning shall be in letters three (3) inches high or larger. The door to the chlorine room shall be provided with a shatter resistant inspection window.

f. Chlorinators shall be a solution-feed type, capable of delivering chlorine at its maximum rate without releasing chlorine gas to the atmosphere. Chlorinators shall be designed to prevent the backflow of water into the chlorine solution container.

g. Facilities that provide chlorine containment and chlorine scrubber units approved by the local regulatory agency are considered in compliance with paragraphs a. through b. of Regulation 3 in Section 4 of this code.

h. A common chlorine gas disinfection system may be utilized in separate swimming pools if separate metering and feeding devices are provided for each swimming pool.

i. The addition of gaseous disinfectant directly into a public or semipublic swimming pool is prohibited. A chlorine gas disinfection system shall not be used for the disinfection of water in a public or semipublic spa.

REGULATION 4. Liquid Disinfectants

Hypochlorite solutions shall be fed by an acceptable type of hypochlorinator.

REGULATION 5. Dry Disinfectants

Granular, tablet, stick and other forms of dry disinfectant shall be fed by an adjustable automatic feeding device.

REGULATION 6. Disinfection Equipment

Disinfection equipment and chemical feeders shall comply with the requirements set forth in American National Standards Institute/NSF International Standard 50, "Circulation System Components and Related Materials for Swimming Pools, Spas / Hot Tubs," NSF International, 3475 Plymouth Road, P.O. Box 130140, Ann Arbor, Michigan.

REGULATION 7. Chemical Feeders

Chemical feeders, mixing tanks and other equipment may be required where the continuous addition of certain chemicals is deemed by the Department to be necessary for the treatment and filtration process.

a. An adjustable automatic chemical feeder shall be provided to ensure the continuous disinfection of the water in a public or semipublic swimming pool or spa. Timers on disinfection equipment are prohibited. Disinfection shall be accomplished by chlorination or by other methods that are approved by the Department. The method of disinfection shall effectively maintain an adequate disinfectant residual in the water which is subject to field-testing by other methods that are easy to use and accurate.
    1. Chlorine disinfection equipment for a public or semipublic swimming pool shall be designed to maintain a free chlorine residual of 1.0 PPM to 5.0 PPM. Chlorine disinfection equipment for a public or semipublic spa shall be designed to maintain a free chlorine residual of 3.0 PPM to 5.0 PPM.
    2. Bromine disinfection equipment for a public or semipublic swimming pool shall be designed to maintain a bromine residual of 2.0 PPM to 4.0 PPM. Bromine disinfection equipment for a public or semipublic spa shall be designed to maintain a bromine residual of 3.0 PPM to 5.0 PPM.

b. The use of chlorinated isocyanurates or cyanuric acid stabilizer for disinfection and stabilization is permitted. If used, chlorinated isocyanurates shall be fed so as to maintain required disinfectant residual levels. Cyanuric acid levels, whether from chlorinated isocyanurates or from the separate addition of cyanuric acid stabilizer, shall not exceed 100 PPM.

c. The use of chloramines as a primary disinfectant of swimming pool or spa water is prohibited.

d. Metering and feeding devices shall be provided for each swimming pool.

e. Disinfection equipment and chemical feeders shall comply with the requirements set forth in American National Standards Institute/NSF International Standard 50, "Circulation System Components And Related Materials For Swimming Pools, Spas / Hot Tubs," NSF International, 3475 Plymouth Road, P.O. Box 130140, Ann Arbor, Michigan which is incorporated by reference and on file with the Secretary of State and this Department.

f. If a chemical feeder is used, it shall be installed to inject solution downstream from the filter and the heater. An erosion-type feeder may be installed to feed solution to the suction side of the pump. A chemical feeder shall be installed so it cannot operate unless the filter pump is running.

MARICOPA COUNTY ENVIRONMENTAL HEALTH CODE

CHAPTER VI

BATHING PLACES - PUBLIC AND SEMIPUBLIC SWIMMING POOLS

SECTION 5

BATHHOUSE AND DRESSING ROOM FACILITIES

REGULATION 1. For All Swimming Pools

a. The general layout of bathhouses shall be such that bathers leaving the dressing room pass the toilets and showers in sequence before entering the pool.

b. Separate dressing rooms shall be provided for each sex and equipped with baskets or other checking facilities adequate for the maximum number of people to be accommodated.

c. All entrances to, and exits from, the dressing rooms shall be effectively screened to interrupt the line of sight of persons outside the dressing rooms.

d. Walls and partitions of dressing rooms, locker rooms, toilets and showers shall be light colored, smooth, nonabsorbent and easily cleanable. Concrete or pumice blocks used for interior wall construction in these locations shall be finished and sealed to provide an easily cleanable surface**.** Partitions shall be designed so that a waterway is provided between partitions and the floor to permit thorough cleaning of the walls and floor areas with hoses and brooms.

e. Floors shall be of non-slip construction, free of open cracks and sloped to adequate drains so that the surface will be free of standing water and puddles. Floors shall be sloped not less than one-fourth (1/4) inch per one (1) foot toward the drains to ensure positive drainage. Carpeting is prohibited.

f. All furniture shall be of simple character and easily cleanable. Locker compartments, partitions, booths, furniture and other appurtenances to dressing rooms shall be so installed or raised above the floor to permit thorough cleaning and flushing down the dressing rooms and bathhouse interior.

g. An adequate number of hose bibbs shall be provided for flushing down the dressing rooms and bathhouse interior. Hose bibbs shall be provided in the bathhouse so that all parts of the floor and walls may be reached with a 50-foot hose. Hose bibbs shall be protected against back siphonage with an atmospheric vacuum breaker. The Department may approve quick disconnect style hose bibbs.

h. Dressing rooms, toilets and showers shall be provided with adequate lighting and ventilation. Toilet facilities shall be provided for each sex in accordance with the table below:

Men	One (1) toilet and one (1) urinal shall be provided for each 100 bathers or fraction thereof.
Women	- One (1) toilet shall be provided for each 50 bathers or fraction thereof, but in no case shall be less than two (2) toilets provided. - Sanitary napkin dispensers and a covered waste receptacle shall be installed in toilet or shower areas designated for female users.

j. Shower and hand washing facilities with hot and cold water and soap shall be provided for each sex in accordance with the table below. Tempered water only shall be provided at all showerheads. The water heater and thermostatic mixing valve shall be inaccessible to bathers and shall be capable of providing two (2) gallons per minute of 90°F water to each showerhead. The shower and hand washing facilities shall be provided for each sex in accordance with the table below:

Shower	- One (1) shower shall be provided for each 50 bathers or fraction thereof. - A minimum of two (2) showerheads shall be provided in each dressing room.
Lavatory	- One (1) lavatory with unbreakable mirror for each 100 bathers or fraction thereof. - An additional one (1) lavatory and unbreakable mirror shall be provided for each additional 100 users or fraction thereof. - Soap dispensers for providing either liquid or powdered soap shall be provided at each lavatory. - Soap dispensers shall be made of metal or plastic with no glass permitted.

k. Drinking water from an approved source and dispensed through one (1) or more drinking fountains shall be located on the deck of each public swimming pool or spa.

l. An establishment that operates a semipublic swimming pool or spa and provides a private room with a toilet and lavatory, soap and hand-drying device for bathers shall be in compliance with the requirements of this Section.

MARICOPA COUNTY ENVIRONMENTAL HEALTH CODE

CHAPTER VI

BATHING PLACES - PUBLIC AND SEMIPUBLIC SWIMMING POOLS

SECTION 6

PUBLIC SWIMMING POOLS

In addition to complying with the Regulations in Sections 1, 2, 3, 4, and 5 of this Chapter, Public Swimming Pools shall comply with the following Regulations:

REGULATION 1. Design Standards and Specifications

a. Public pools shall be constructed of concrete or other material impervious to water, which is equivalent in strength and durability, with a smooth, slip-resistant surface and designed and built to withstand the anticipated stresses. All corners must be rounded. A white pastel or other light colored waterproof interior finish, which will withstand repeated brushing, scrubbing and cleaning shall completely line the pool to the coping. Pool linings not totally bonded to the pool sides and bottom, such as plastic films and similar linings and finishes, are prohibited.

b. A pool shall have no projections, protrusions, extensions, means of entanglement or other obstructions that may cause entrapment of or injury to the user from the pool wall and floor surfaces. This does not include seats, steps, which may be constructed only in the shallow end of the pool, and ladders which may be constructed in the deep area(s) of the pool. The seat, bench and step edges shall be outlined with a sharply contrasting colored tile or other suitable material which is clearly visible from the edge of the pool adjacent to the steps. This subsection does not prohibit water features such as slides, water play equipment or water volleyball and basketball nets.

c. An underwater seat or bench shall:

    1. Have edges that are outlined with a sharply contrasting colored tile or other material that is clearly visible from the deck adjacent to the underwater seat or bench;

    2. Have a slip-resistant surface;

    3. Be located outside of the deep area of a swimming pool;

4. Have a maximum depth of 24 inches below the waterline and a minimum depth of 12 inches below the waterline; and

5. Have a maximum width of 20 inches.

d. Water depth and depth markers:

1. Water depth shall be conspicuously and permanently marked on the walls of the pool and on the top of the coping or the edge of the deck next to the swimming pool;

2. Depth markers on a vertical wall shall be positioned to be read from the waterside;

3. Depth markers that are located on a deck shall be made of slip-resistant materials;

4. Depth markers for a public or semipublic swimming pool shall be installed at points of maximum and minimum water depth and at all points of slope change;

5. Markings are required at one (1) foot depth intervals to a depth of five (5) feet, thereafter, depth markers shall be installed at two (2) foot depth intervals;

6. Depth markers shall not be spaced at distances greater than 25 feet;

7. Depth markers shall be located on both sides and at both ends of a public or semipublic swimming pool; and

8. Depth markers shall be in Arabic numerals with a four (4) inch minimum height. Arabic numerals shall be of contrasting color to the background.

9. In pools utilized for competitive swimming and training, approach-warning markings must be installed under the water level on opposite walls at the end of each swimming lane in the pool. Warning markings must be of uniform color and size on a background of contrasting uniform color. In addition, they must be clearly visible in or out of the water at all times from a distance of not less than ten (10) feet.

10. The shallow area of a public swimming pool shall be visually set apart from the deep area of the pool by a rope and float line. Except for zero depth entries, the depth in the shallow portion of a pool shall not be less than two (2' 0") feet or greater than three (3' 0") feet.

e. For the purposes of these Regulations, that portion of a swimming pool five (5) feet or less in depth shall be designated as the "non-swimmer" area. That part of the pool deeper than five (5) feet shall be designated as the "swimming" area. In designing pools and computing the maximum bathing load for a public or semipublic swimming pool, areas shall be proportioned as follows:

1. Ten (10) square feet of pool surface area per bather shall be provided in the "non-swimmer" area.

2. 24 square feet of pool surface area shall be provided for each swimmer in the "swimming" area.

3. 300 square feet of pool surface area shall be reserved around each diving board or diving platform. This reserved area shall not be included in determining the "swimming" area.

f. The maximum bathing load for a public or semipublic swimming pool or spa shall not be exceeded.

g. The maximum bathing load for a public swimming pool shall be limited by the number of users for the toilets, showers, lavatories that are provided in the bathhouses or dressing rooms prescribed in Section 5, Regulation 1 of this code.

h. The maximum bathing load for a public or semipublic spa shall not exceed the area of the spa in square feet divided by nine (9) square feet.

i. The maximum bathing load for a public or semipublic swimming pool or spa shall be posted in the pool enclosure.

REGULATION 2. Overflow Collection Systems

An overflow collection system shall be installed in all public pools.

a. The overflow system shall be designed and constructed so that the level of the pool is maintained at the mid-point of the operating range of the skimmers.

b. Rim type overflow systems where used shall be installed on at least two (2) opposite sides and have a total length of at least 50 percent of the perimeter of the pool. The system shall be capable of carrying 50 percent of the design capacity of the recirculating system. The surge tank shall be equipped with float controls regulating the main drain, fill line and overflow. It shall have a capacity in gallons equal to the surface area of the pool measured in square feet**.** The surge tank may be incorporated into the gutter.

c. Overflow gutters, where used, shall be installed continuously around pools with the lip of the gutter level throughout its perimeter. They shall be provided with sufficient opening at the top and width at the bottom to permit easy cleaning. The gutter bottom shall be pitched one-quarter (1/4) inch per foot to drainage outlets located at intervals as approved by the Department. Outlet piping shall be sized to circulate at least 50 percent of the capacity of the circulating system and have a properly installed approved cover. The surge tank shall be equipped with float controls regulating the main drain, fill line and overflow. It shall have a capacity in gallons equal to the surface area of the pool measured in square feet. Stainless steel gutters and other specialty gutter systems may be used if they are hydraulically equivalent to overflow gutters.

d. Skimming devices, where used, shall be recessed into the pool wall and shall be installed to achieve effective skimming action throughout the pool. Skimmers shall be provided on a basis of at least one (1) skimmer for each 400 square feet of surface area. The overflow slot shall be set level and shall not be less than eight (8) inches in width at the narrowest section. The rate of flow through the skimmers shall be a minimum of 75 percent (75%) of the recirculation system capacity. Skimmers shall be designed to carry at least 30 GPM per linear foot of weir throat. A minimum of two (2) skimmers shall be installed in swimming pools. Where three (3) or more surface skimmers are used, they must be on a closed loop piping system. At least one (1) surface skimmer shall be located on the side or near the corner of the swimming pool that is downwind of the area's prevailing winds. Main drain piping shall be designed to carry at least 50 percent of the design flow.

e. Mixed inlet types, such as, skimmers and gutters are prohibited on the same body of water.

REGULATION 3. Ladders, Steps, and Recessed Treads

At least one (1) set of steps shall be provided in the shallow end of each swimming pool. Where the deep section is greater than 20 feet in width, two (2) ladders, located on opposite sides of the deep section are required. A minimum of two (2) means of egress will be required in all pools. There shall be at least one (1) ladder or stair for each 75 feet of perimeter. Preformed step holes and suitable handrails may be substituted for ladders. At least one (1) set of steps shall be provided in the shallow end of each swimming pool.

a. Steps must be permanently marked so as to be clearly visible from above or below the swimming pool surface. The edges of the steps shall be clearly outlined with a sharply contrasting colored tile or other material that is clearly visible from the deck adjacent to the steps. The tile or other material shall be at a minimum, a continuous 1-inch band or 2-inch square chips spaced no more than 8-inches apart, when measured between the edge of the chips. Steps shall not project into the pool in a manner, which will create a hazard. Steps may be constructed only in the shallow area of a public or semipublic swimming pool. All tread surfaces on steps shall have slip-resistant surfaces. Step treads shall have a minimum unobstructed horizontal depth of ten (10) inches. Risers shall have a maximum uniform height of 12 inches, with the bottom riser height allowed to vary plus or minus two (±2) inches from the uniform riser height. The location of stairs, ladders, and recessed treads shall not interfere with racing lanes. A set of steps shall be provided in a public or semipublic spa**.** Handrails shall be provided at one side or in the center of all stairways. Handrails shall be installed in such a way that they can be removed only with tools. A beach entry may be substituted for steps in the shallow end of the pool.

b. A swimming pool ladder shall be equipped with two (2) handrails. All treads on ladders shall have slip-resistant surfaces. Ladder treads shall have a minimum horizontal depth of one and one-half (1 1/2) inches. The distance between ladder treads shall range from a minimum of seven (7) inches to a maximum of 12 inches. Below the waterline, there shall be a clearance of not more than six (6) inches and not less than three (3) inches

between any ladders tread edge and the wall as measured from the side of the tread closest to the wall.

c. Recessed treads with handrails may be substituted for ladders. Recessed treads shall be pre-formed, readily cleanable, and designed to drain into the swimming pool or spa to prevent the accumulation of dirt in the recessed treads. Each set of recessed treads shall be equipped with two (2) handrails. All recessed treads shall have slip-resistant surfaces. The vertical distance between the swimming pool or spa coping edge or deck and the uppermost recessed tread shall be a maximum of 12 inches. Recessed treads at the centerline shall have a uniform vertical spacing of 12 inches maximum and seven (7) inches minimum. Recessed treads shall be at least five (5) inches deep and 12 inches wide.

REGULATION 4. Lighting

It is the responsibility of the owner to insure that a public or semipublic swimming pool or spa and adjacent deck areas shall be lighted by natural or artificial means when in use. A public or semipublic swimming pool or spa that is intended to be used at night shall be equipped with artificial lighting that is designed and spaced so that all parts of the swimming pool or spa, including the bottom, may be seen without glare.

REGULATION 5. Hose Bibbs

Hose bibb(s) shall be provided along the perimeter of the deck so that all parts of the deck may be washed down. At a minimum, each hose bibb shall be protected against back siphonage with an atmospheric vacuum breaker. The Department may approve quick-disconnect-style hose bibb(s)

REGULATION 6. Diving Facilities

a. The dimensions of a diving area in a public or semipublic swimming pool shall comply with minimum requirements for length, width, depth, area and other dimensions specified in Appendix A or Appendix B. The diving well profile in Appendix A does not apply to a special use pool that is intended for competitive diving and has been approved by the Department pursuant to Chapter VI, Section 10 of this code.

b. Diving equipment shall be permanently anchored to the swimming pool deck. Equipment shall be rigidly constructed with sufficient bracing to insure stability. Supports, platforms, steps, and ladders for diving equipment shall be designed to carry anticipated loads.

c. All diving stands higher than 21 inches, measured from the deck to the top of the board, shall be provided with stairs or a ladder.

d. Diving equipment shall have a durable finish. The surface finish shall be free of tears, splinters, or cracks that may be a hazard to users.

e. Steps and ladders leading to diving boards and diving platforms shall be of corrosion-resisting materials and shall have slip-resistant tread surfaces. Step treads shall be self-draining.

f. Diving boards, diving platforms, and starting blocks shall have slip-resistant tread surfaces.

g. Handrails shall be provided at all steps and ladders leading to diving boards that are one (1) meter or more above the water.

h. Diving boards and diving platforms that are one (1) meter or higher shall be protected with guard rails. Guardrails shall be at least 30 inches above the diving board or diving platform and shall extend to the edge of the swimming pool wall.

i. A label shall be permanently affixed to a diving board and shall include the following:

   1. Manufacturer's name and address;

   2. Board length; and

   3. Fulcrum setting instructions.

j. The maximum diving board height over the water is three (3) meters. The maximum height of a diving platform over the water is ten (10) meters.

k. Starting blocks shall be located in the deep end of a public swimming pool or where the depth of the water is at least five (5) feet.

l. There shall be a completely unobstructed clear vertical distance of 13 feet above any diving board measured from the center of the front end of the board. This clear, unobstructed vertical space shall extend horizontally at least eight (8) feet behind, eight (8) feet to each side, and 16 feet ahead of the front end of the board.

REGULATION 7. Lifeguards

a. At all public pools at least one (1) lifeguard shall be on duty for each 2,000 square feet of pool surface area or 150 bathers or as approved by the Department.
b. Lifeguards shall be in constant attendance during bathing hours and no bathers shall be permitted in a pool area unless lifeguards are present.

REGULATION 8. Lifeguard Chairs

Each public pool shall have at least one (1) elevated lifeguard chair for each 2,000 square feet of pool surface area or 150 bathers. The chairs must be located close to the deeper portion of the pool and provide a clear, unobstructed view of the pool bottom. If a public swimming pool is provided with more than one (1) lifeguard chair or the width of the public swimming pool is 45 feet or more, then lifeguard chairs shall be located on each side of the public swimming pool.

REGULATION 9. Lifesaving and Safety Equipment

Lifesaving and Safety equipment consisting of at least two (2) Coast Guard approved ring buoys, each with 50 feet of one-fourth (1/4)-inch rope attached, and one (1) shepherd's crook mounted on a rigid 16-foot pole shall be provided at each public pool. Public swimming pools shall have lifesaving and safety equipment that is conspicuously and conveniently located and maintained ready for immediate use at all times.

REGULATION 10. Drinking Water Supply

Drinking water from an approved source and dispensed through one (1) or more approved sanitary drinking fountains shall be located on the deck of each public pool or spa.

REGULATION 11. Fencing

All public pools, spas and walkways adjacent to such pools shall be enclosed by a durable fence or wall at least six (6) feet high to provide bather control while the pool is in operation, and to prohibit any person from using the pool except when a lifeguard is on duty. The height of the fence, wall, or barrier shall be measured on the side of the barrier, which faces away from the swimming pool or spa. Fences, walls or artificial barriers shall:

a. Be constructed so as to afford no external handholds or footholds;

b. Be of materials, which are impenetrable by small children, dogs, livestock, etc.;

c. Be a minimum of six (6) foot high above the highest practical foothold, curb, or (in the case of a combination fence) the base wall;

d. Have openings or spacings of such size that a spherical object four (4) inches in diameter cannot pass through; and

e. Be equipped with a gate that opens outward from the swimming pool or spa, with a self-closing and positive self-latching closure mechanism or a locking closure located at or near the top of the gate and at least 54 inches above the floor.

f. The distance between the horizontal components of a fence shall not be less than 45 inches apart. The horizontal members shall be located on the interior side of the fence. Spacing or openings between vertical members shall be of a size that a spherical object four (4) inches in diameter cannot pass through.

g. The maximum mesh size for a wire mesh or chain link fence shall be 1.25" X 1.25" (maximum opening area size = 1.56 square inches). The maximum opening formed by the composed diagonal members shall be no more than 1.75 inches.

h. Masonry or stone walls shall not contain indentations or protrusions except for normal construction tolerances and tooled masonry joints.

i. If a wall of a building serves as part of the barrier around a public or semipublic swimming pool or spa, there shall be no direct access to the swimming pool or spa through the wall except as follows:

1. Windows leading to the swimming pool or spa area shall be equipped with a screwed-in place wire mesh screen or a keyed lock that prevents opening the window more than four (4) inches.

2. A hinged door leading to the swimming pool or spa area shall be self-closing and shall have a positive self-latching device. The release mechanism of the positive self-latching device shall be located at least 54 inches above the floor.

3. If an additional set of doors is required by the fire code allowing access to the swimming pool or spa, they shall be self-closing and self-latching, equipped with panic bars no less than 54 inches from the floor to the bottom of the bar and designated "for emergency use only."

4. Sliding doors leading to the swimming pool or spa area are prohibited except for sliding doors that are self-closing and self-latching.

j. If a barrier is composed of a combination concrete masonry unit and wrought iron, the wrought iron portion shall be installed flush with the outside vertical surface of the concrete masonry unit. The space between the wrought iron and the concrete masonry unit shall be one-half (1/2) inch or less. The vertical members of the wrought iron shall be spaced four (4) inches on center.

k. An area clear of any type of footholds which could be used to assist in scaling the barrier must be maintained for a minimum of three (3) feet outside the barrier and so that the effective height of the barrier is maintained.

l. In addition, the mechanical filtering, disinfection and recirculating equipment must be protected from tampering by a suitable enclosure or fence.

REGULATION 12. Lifeline

A lifeline shall be installed across each public swimming pool at the point where the floor slope begins to exceed one (1) foot in ten (10) feet whenever the pool is open for use by the general public. The lifeline shall be three-fourths (3/4) inch minimum diameter and supported by floats spaced at intervals not greater than seven (7) feet. The rope and float line shall be securely fastened to wall anchors that are made of corrosion-resistant materials. The wall anchors shall be recessed or have no projection that constitutes a hazard when the float line is removed.

REGULATION 13. Wastewater Disposal

All sewage from plumbing fixtures, including urinals, toilets, lavatories, showers, drinking fountains, floor drains and other sanitary facilities shall be disposed of in a sanitary manner. The

backwash from filters and wasted pool water may be disposed of, in whole or in part, by other approved means. The method of disposal shall comply with applicable disposal requirements established by a municipal or other local authority. There shall be no direct physical connection between the sewer system and any drain from the pool or recirculation system.

REGULATION 14. Miscellaneous

a. Walkways shall be provided adjacent to the pool and shall:

1. Be at least ten (10) feet wide, continuous and unobstructed except that where diving boards and platforms are installed the walkway shall extend at least five (5) feet to each side and behind the board or platform but not less than 15 feet from the pool wall;

2. Slope away from the pool with a pitch of at least one-fourth (1/4) inch per one (1) foot to properly located deck drains or other approved points of disposal;

3. Be constructed of concrete or other inorganic material, with a slip-resistant, easily cleanable finish, free of sharp or jagged edges or surfaces;

4. Be designed to conform to the dimensions shown in Appendix A, as applicable;

5. Have valves that are installed, in or under any deck, to provide a minimum ten (10) inch diameter access cover and a valve pit to facilitate the repair and maintenance of the valve;

6. Have joints in decks that are provided to minimize the potential for cracks due to changes in elevations or movement of the slab. The maximum voids between adjoining concrete slabs or between concrete slabs and expansion joint material shall be three-sixteenths (3/16) inch of horizontal clearance with a maximum difference in vertical elevation of one-fourth (1/4) inch. Areas where the deck joins concrete shall be protected by expansion joints to protect the swimming pool or spa from the pressures of relative movements. Construction joints where pool or spa coping meets the deck shall be watertight and shall not allow water to pass through to the underlying ground;

7. Have decks that are sloped to effectively drain either to perimeter areas or to deck drains. Drainage shall remove splash water, deck cleaning water, and rainwater without leaving standing water. The minimum slope of the deck shall be one-fourth (1/4) inch per one (1) foot. The maximum slope of the deck shall be one (1) inch per one (1) foot, except for ramps;

8. Provide site drainage to direct all perimeter deck drainage and general site and roof drainage away from a public or semipublic swimming pool or spa. Yard drains may be required to prevent the accumulation or puddling of water in the general area of the deck and related improvements; and

9. Have a coping or cantilevered deck that may project from a swimming pool or spa wall to provide a handhold for users. The coping or deck shall be rounded, have a slip-resistant surface finish, and shall not exceed three and one-half (3 1/2) inches in thickness. The overhang of the coping or deck shall not exceed two (2) inches or be less than one (1) inch.

b. Freeboard shall not exceed eight (8) inches.

MARICOPA COUNTY ENVIRONMENTAL HEALTH CODE

CHAPTER VI

BATHING PLACES - PUBLIC AND SEMIPUBLIC SWIMMING POOLS

SECTION 7

SEMIPUBLIC SWIMMING POOLS

In addition to complying with all the Regulations in Sections 1, 2, 3, 4, 5 and Section 6, Regulations 1, 2, 3, 4, 5, and 6 of this Chapter, Semipublic Swimming Pools shall comply with the following Regulations:

REGULATION 1. Lifesaving and Safety Equipment

Lifesaving and safety equipment consisting of at least one (1) Coast Guard approved ring buoy with 50 feet of one-fourth (1/4) inch rope attached, and one (1) shepherd's crook mounted on a rigid 16-foot pole shall be provided at each semi-public pool. Semi-public swimming pools shall have lifesaving and safety equipment that is conspicuously and conveniently located and maintained ready for immediate use at each pool at all times.

REGULATION 2. Fencing

a. Semipublic swimming pools, spas and bathing places shall be protected by a fence, wall or other approved barrier at least five (5) feet high from all parts of the premises not directly related to the swimming pool, spa or bathing place. The height of the fence, wall, or barrier shall be measured on the side of the barrier that faces away from the swimming pool or spa**.** An area clear of any type of footholds, which could be used to assist in scaling the barrier, must be maintained for a minimum of three (3) feet outside the barrier so that the effective height of the barrier is maintained. Fences, walls or artificial barriers shall:

1. Be constructed so as to afford no external handholds or footholds;
2. Be of materials, which are impenetrable by small children, dogs, livestock, etc.;
3. Have openings or spacings of such size that a spherical object four (4) inches in diameter cannot pass through;
4 Be equipped with a gate that opens outward from the swimming pool or spa, with a self-closing and positive self-latching closure mechanism at least 54 inches above the floor;
5. The distance between the horizontal components of a fence shall not be less than 45 inches apart. The horizontal members shall be located on the interior side of the fence;
6. The maximum mesh size for a wire mesh or chain link fence shall be 1**.**25" X 1**.**25" (maximum opening area size = 1**.**56 square inches). The maximum opening formed by the composed diagonal members shall be no more than 1**.**75 inches.

7. Masonry or stone walls shall not contain indentations or protrusions except for normal construction tolerances and tooled masonry joints;
8. If a wall of a building serves as part of the barrier around a semipublic swimming pool or spa, there shall be no direct access to the swimming pool or spa through the wall except as follows:
   (a) Windows leading to the swimming pool or spa area shall be locked, preventing opening the window more than four (4) inches;
   (b) A hinged door leading to the swimming pool or spa area shall open outward from the swimming pool or spa, be self-closing and shall have a positive self-latching mechanism device. The release mechanism of the self-latching device shall be located at least 54 inches above the floor;
   (c) If an additional set of doors is required by the fire code allowing access to the swimming pool or spa area, they shall be self-closing and positive self-latching, equipped with panic bars no less than 54 inches from the floor to the bottom of the bar, or equipped with non-disarmable alarms if fire codes require panic bar heights lower than 54 inches, and designated "for emergency use only";
   (d) Sliding doors leading to the swimming pool or spa area are prohibited except for sliding doors that are self-closing and self-latching with the release mechanism of the self-latching device located at least 54 inches above the floor.
9. If a barrier is composed of a combination concrete masonry unit and wrought iron, the wrought iron portion shall be installed flush with the outside vertical surface of the concrete masonry unit. The space between the wrought iron and the concrete masonry unit shall be one-half (1/2) inch or less. The vertical members of the wrought iron shall be spaced four (4) inches on center.

b. The pool enclosure shall not serve as or function as all or part of a residential fence.
c. In addition, the mechanical filtering, disinfection and recirculation equipment must be protected from tampering by an enclosure or fence as described in this Section, Regulation 2, a. A locked closure can be provided in lieu of a self-closing and positive self-latching closure.

REGULATION 3. Walkways

a. Walkways shall be provided immediately adjacent to semipublic pools. Walkways shall be continuous, unobstructed and at least four (4) feet wide. Where diving boards and platforms are installed, the walkway shall extend at least four (4) feet to each side and behind the board or platform.
b. Walkways shall slope away from the pool with a pitch of at least one-fourth (1/4) inch per foot to properly located deck drains or other approved points of disposal.
c. Walkways shall be constructed of concrete or other inorganic material, with a slip-resistant, easily cleanable finish, free of sharp or jagged edges or surfaces.
d. Design of walkways shall conform to the dimensions shown in Appendix A, as applicable.
e. Any valve that is installed in or under any deck shall provide a minimum ten (10) inch diameter access cover and a valve pit to facilitate the repair and maintenance of the valve.
f. Joints in decks shall be provided to minimize the potential for cracks due to changes in elevations or movement of the slab. The maximum voids between adjoining concrete slabs or between concrete slabs and expansion joint material shall be three-sixteenths (3/16) inch

of horizontal clearance with a maximum difference in vertical elevation of one-fourth (1/4) inch. Areas where the deck joins concrete shall be protected by expansion joints to protect the swimming pool or spa from the pressures of relative movements. Construction joints where pool or spa coping meets the deck shall be watertight and shall not allow water to pass through to the underlying ground.

g. Decks shall be sloped to effectively drain either to perimeter areas or to deck drains. Drainage shall remove splash water, deck cleaning water, and rainwater without leaving standing water. The minimum slope of the deck shall be (1/4) inch per one (1) foot. The maximum slope of the deck shall be one (1) inch per one (1) foot, except for ramps.

h. Site drainage shall be provided to direct all perimeter deck drainage and general site and roof drainage away from a public or semipublic swimming pool or spa. Yard drains may be required to prevent the accumulation or puddling of water in the general area of the deck and related improvements.

REGULATION 4. Floor Slope

In water less than five (5) feet in depth, the slope shall not exceed one (1) foot in ten (10) feet.

REGULATION 5. Bathhouses and Dressing Room Facilities

A bathroom with a minimum of one (1) toilet shall be provided for each sex. Each bathroom shall have at least one (1) lavatory. Soap dispensers for providing either liquid or powdered soap shall be provided at each lavatory. Soap dispensers shall be made of metal or plastic with no glass permitted. Establishments operating semi-public pools, that provide clean and sanitary private rooms, including toilet, body washing and drinking water for all bathers shall be deemed to have complied with Section 5, Regulation 1.

REGULATION 6. Depth

Except for zero depth entries, the depth in the shallow portion of the pool shall not be less than two (2' 0") feet or greater than three (3' 0") feet.

REGULATION 7. Freeboard

Freeboard shall not exceed eight (8) inches, except, freeboard may be increased in those cases where it is desired to provide walls, terraces, etc., provided that the following are complied with:

a. Guard rails or other similar devices must be provided to prevent the raised areas use as a diving platform;

b. The vertical surface of these sections must be constructed of sound durable inorganic material, rigid, smooth, and easily cleanable;

c. The horizontal surfaces must comply with the provisions for walkways;

d. The vertical surface area of these sections will be included as surface area of the pool for determining the type, size, location and numbers of equipment and piping; and

e. The length and height of the section where freeboard is increased shall be limited. The Department will review each case as unique, and consideration will be given to factors of safety, exit distance, alternative exits, location, and water depth.

MARICOPA COUNTY ENVIRONMENTAL HEALTH CODE

CHAPTER VI

BATHING PLACES - PUBLIC AND SEMIPUBLIC SWIMMING POOLS

SECTION 8

WADING POOLS

In addition to complying with the Regulations in Sections 1, 2, 3, 4, 5, 7 and Section 6, Regulations 1, 2, 3, 4, and 5 of this Chapter, Wading Pools shall comply with the following Regulations:

REGULATION 1. Public

a. In public bathing places, wading pools shall be separated from swimming pools by a minimum four (4) foot high fence or partition with self-closing, self-latching gate to prevent the direct entrance of waders into the swimming pool area.
b. Public wading pools shall be equipped with chemical controllers and chart recorders capable of maintaining pH and chlorine levels within the regulated limits.

REGULATION 2. Semipublic

Wading pools shall be separated from semipublic swimming pools by a minimum of four (4) feet of walkway. A wading pool shall not be located adjacent to the deep area of a semipublic swimming pool.

REGULATION 3. Depth

Wading pools shall have a maximum depth of 20 inches, the slope of the bottom shall not exceed one (1) foot in 12 feet, and a non-slip surface shall be provided.

REGULATION 4. Circulation

a. Wading pools shall have a maximum turnover cycle of one (1) hour;
b. All wading pools must have separate equipment from any other pool for water recirculation and disinfection and there shall be no cross-connection between a wading pool and any other pool;
c. Wading pools shall be equipped with at least two main drains located in the deepest portion that are separated by a minimum of three (3) feet. Suction outlets in a wading pool shall be plumbed so as to eliminate any possibility of entrapping suction. Each drain shall be covered by an anti-vortex cover, which is not readily removable by bathers and has safe openings of at least four (4) times the area of the drainpipe.
d. Skimmers shall be provided on the basis of at least one (1) skimmer for each 200 square feet of wading pool surface area. Skimmer flow rates shall be the same as required for

swimming pools. Where only one (1) skimmer is provided, the main drain may be connected through the skimmer;

e. Inlets shall be provided on a basis of at least one (1) for each 15 feet of periphery. Where three (3) or more inlets are required, they shall be on a closed loop piping system.

REGULATION 5. Drinking Fountains

A sanitary drinking fountain at a height convenient to small children shall be provided at one (1) side or end of the area. Alternately, a fountain with a raised step, to enable small children to drink without assistance, may be provided.

REGULATION 6. Depth Markers

A wading pool shall be equipped with depth markers complying with Chapter VI, Section 6, Regulation 1, of this code.

REGULATION 7. Disinfection

Gaseous chlorine shall not be used for disinfection of water in wading pools.

BATHING PLACES - PUBLIC AND SEMIPUBLIC SWIMMING POOLS

SECTION 9

SPAS

In addition to complying with the Regulations in Sections 1, 2, 3, 4, 5, 7 and all the Regulations in Section 6 (except Regulation 9) and Section 7 (except Regulation 1) of this Chapter, Spas shall comply with the following Regulations:

REGULATION 1. Depth

Spas shall have a maximum depth of 42 inches. The bottom shall have a maximum slope of one (1) foot in ten (10) feet and be finished with a non-slip surface. A set of entrance steps and handrails shall be installed. All steps, benches or other projections from the walls shall be outlined on the top surface edges by a continuous line of sharply contrasting colored tile or other suitable material that is clearly visible from the edge of the pool.

REGULATION 2. Circulation

Spas shall have a maximum turnover cycle of 30 minutes. A separate water recirculation and disinfection system from any other pool or spa shall be installed for spas. Therapy heads or other devices, which create roiling water or other similar effects, may not be connected to the recirculation system, but must be operated through a separate system. Dual main drains shall be provided. Skimmers shall be provided at the rate of one (1) skimmer for each 200 square feet of pool surface. Skimmer flow rates shall be the same as required for swimming pools. Where only one skimmer is provided, the main drains may be connected through the skimmer. Inlets shall be provided on a basis of at least one (1) for each 15 feet of pool periphery. Where three (3) or more inlets are required they shall be on a closed loop piping system.

REGULATION 3. Walkways

A minimum of four (4) feet of deck shall be provided on at least two (2) contiguous sides of the pool and 50 percent of the periphery. When applicable, the remaining deck shall not be more than eight (8) inches in width and shall be designed to preclude its use as a walkway.

REGULATION 4. Drains

A minimum of two (2) suction outlets shall be provided for each pump in a suction outlet system for a public or semipublic or spa. The suction outlets shall be separated by a minimum of three (3) feet or located on two (2) different planes such as one (1) suction outlet on the bottom and

one (1) on a vertical wall or one (1) suction outlet each on two (2) separate vertical walls provided the three (3)- foot separation is always maintained. The suction outlets shall be plumbed to draw water through them simultaneously through a common line to the pump. Suction outlets shall be plumbed to eliminate the possibility of entrapping suction. All drains and outlets of spas must have plumbing provisions to eliminate any possibility of entrapping suction. The total velocity through grate openings shall not exceed one and one-half (1 1/2) feet per one (1) second.

REGULATION 5. Disinfection

Gaseous chlorine shall not be used for the disinfection of spas.

REGULATION 6. Separation Walls

Where a spa is located contiguous with a swimming pool, the separating wall shall be designed to preclude its use as a walkway unless the minimum required walkway widths can be maintained.

REGULATION 7. Temperature

The temperature of heated water coming into a public or semipublic spa shall not exceed 104°F. (40°C).

REGULATION 8. Timer

The timer for a public or semipublic spa which controls the hydrotherapy jets shall be located at least five (5) feet from the spa and shall have a maximum time limit of 15 minutes.

REGULATION 9. Air Blower and Air Induction Systems

An air blower system or air induction system for a public or semipublic spa shall comply with the following requirements:

a. The system shall prevent water backflow, which could cause an electrical shock hazard;

b. Air intake sources shall not introduce water, dirt, or contaminants into the spa;

c. The system shall be properly sized for a commercial spa application;

d. If the air blower is installed within an enclosure or indoors, then adequate ventilation shall be provided; and

e. Integral air passages shall be pressure tested and shall provide structural integrity to a value of one and one-half (1 1/2) times the intended working pressure.

REGULATION 10. Depth Markers

Depth markers for a public or semipublic spa shall comply with all of the following:

a. A public or semipublic spa shall have permanent depth markers with numbers that are a minimum of four (4) inches high. Depth markers shall be plainly and conspicuously visible from all points of entry.

b. The maximum depth of a public or semipublic spa shall be clearly indicated by depth markers.

c. There shall be a minimum of two (2) depth markers on the deck and two (2) depth markers at the waterline at each public or semipublic spa.

d. Depth markers shall be spaced at no more than 25 foot intervals and shall be uniformly located around the perimeter of the spa.

e. Depth markers shall be positioned on the deck within 18 inches of the side of the spa. A depth marker shall be positioned so that a person standing on the deck facing the water can read it.

f. Depth markers that are on deck surfaces shall be made of slip-resistant material.

g. Depth markers shall be in Arabic numerals of contrasting color to the background.

CHAPTER VI

BATHING PLACES - PUBLIC AND SEMIPUBLIC SWIMMING POOLS

SECTION 10

SPECIAL USE POOLS

In addition to complying with the Regulations in Sections 1, 2, 3, 4, and 5 of this Chapter, Special Use Pools shall comply with the following Regulations:

REGULATION 1. Supplemental Standards and Requirements

Persons intending to construct a special use pool shall notify the Department and provide plans, specifications and a description of the intended use. The Department will determine which of the Regulations in this Chapter apply to the proposed special use pool. The Department may, at its discretion, establish additional standards or requirements for special use pools, taking into consideration the intended use of the pool, the conditions under which it will be operated and any special circumstances. Where applicable, the Department may consider the design requirements prescribed by an official sanctioning athletic body such as the National Collegiate Athletic Association (NCAA), National Federation of State High School Associations (NFSHSA), U.S. Swimming, U.S. Diving, or the Federation Internationale de Natation Amateur (FINA) in using best professional judgment to approve a special use pool that is intended for competitive swimming and diving.

REGULATION 2. Alternate Design

Where an alternate design for a bathing place or any part thereof is proposed, which complies in principle with the provisions of this code, such design may be approved by the Department.

REGULATION 3. Exercise or Training Bars

a. A swimming pool designed with exercise or training bars in the pool shall be restricted to special use when the bars are located in the pool.

b. Bars shall be constructed of durable material and be reasonably resistant to corrosion under conditions of operations.

c. Bars shall be sealed, welded shut or capped at both ends to prevent retention of water within the bars.

d. Bars may be removable. The bars then shall be wedges anchored in place with a cover plate provided. Watertight anchor plugs (95 percent efficiency) shall be provided when the bars have been removed.

e. Bars shall extend not more than four (4) inches from the side of the pool into the water.

f. The clear opening from the inside of the bar to the side of the pool shall not be less than two (2) inches or more than two and one-fourth (2 1/4) inches.

REGULATION 4. Ramps

Where a ramp is to be installed in a swimming pool, the ramp shall be constructed:

a. Of non-slip material;

b. With a slope not to exceed one (1) foot in 12 feet;

c. With a width of at least three (3) feet;

d. With a level platform at the top and bottom of the ramp;

e. With at least a three and one-half (3 1/2) feet high guardrail installed on the deck from eight (8) inches beyond where the slope for the ramp terminates and extending the length of the ramp; and

f. With return(s) to be located on the pool and ramp walls along the length of the ramp.

REGULATION 5. Spray Ponds

a. All spray ponds shall use potable water.

b. Spray ponds (semipublic and public) shall comply with code references specified in a., b., c. and d. of this Regulation:
   (1) Semipublic spray pond regulation stipulated under Chapter VI, Sections 1 through 5 and 7.
   (2) Public spray pond regulation stipulated under Chapter VI, Sections 1 through 6.

c. Spray ponds in which water is recycled shall be regulated as a special use pool (Chapter VI, Section 10).

d. Spray ponds shall:
   (1) Be made of durable material that is impervious to moisture and retains a non-slip texture that causes no discomfort to bare feet;

(2) Be completely free of obstructions that may be hazardous to children;
(3) Have a floor with a maximum slope of one (1) in ten (10);
(4) Be entirely surrounded by a walkway at least four (4) feet wide, which falls away from the pool or basin edge at a uniform slope of not less than one-fourth (1/4) inch per one (1) foot;
(5) Have a fence or other barrier with controlled access surrounding the spray pond and walkways to prevent the easy access of non-users and pets; and
(6) Have a turnover time of no more than one (1) hour.

REGULATION 6. Water Features

The water features listed in this regulation may also be approved by the Department for installation at places other than special use type bathing places when the design and placement of the water feature prevents a hazard to bathers.

a. In-ground water spray features without floor pod control, including vertical sprays, soft laminar sprays, spray arches, geysers, misters, inverters and similar designs, shall conform to the following:
(1) The height of the water column shall not exceed four feet.
(2) The holes in the floor fitting shall not exceed 5/16 of an inch.
(3) The velocity at the nozzles shall not exceed twenty feet per second.

b. In-ground water spray features with floor pod control, including vertical sprays, laminar cone sprays, geysers, misters, inverters and similar designs, shall conform to the following:
(1) Items 6.a.1. through 3. above.
(2) All exposed hardware and any other sharp projections, if they exist, shall be covered to prevent injuries to bathers.
(3) The holes in the floor fittings shall not exceed 5/16 of an inch.

c. Low profile water toys that protrude above the surface of a spray pond that produce flow streams, including dome sprays, spray loops, water cannon, cascading water toys and similar designs, shall conform to the following:
(1) The diameter of the piping shall be at least 4 inches to prevent a climbing hazard.
(2) All exposed hardware and any other sharp projections, if they exist, shall be covered to prevent injuries to bathers.
(3) The water velocity at any nozzle shall be restricted to twenty feet per second.
(4) If there are nozzles, they must not stick out in a way that could cause injuries to bathers.

d. Water toys that protrude above the surface of a spray pond that produce flow streams overhead, including dumping buckets, dumping toys, cascading water domes, raining toys, multiple spray and dumping structures, tunnel sprays, water cannon and similar designs, shall conform to the following:

(1) The velocity at the nozzles shall be restricted to twenty feet per second.

(2) The nozzles shall not stick out in a way that could cause injuries to bathers.
(3) All exposed hardware and any other sharp projections, if they exist, shall be covered to prevent injuries to bathers.
(4) The height of the water column shall not exceed six feet.
(5) The holes in the floor fitting shall not exceed 5/16 of an inch.
(6) There shall be eight feet of clearance between the pond bottom and the water feature to prevent injuries to bathers.
(7) There shall be a 1/8-inch drain hole in the dumping chamber.

e. The Department may require an owner to apply for and receive a variance prior to installing a water feature that uses materials, equipment, or design features that have not been previously approved by the Department.

REGULATION 7. Non-Rigid Surfaces

The use of rubberized, non-rigid, cushioned surfaces may be allowed on the spray pond provided the following requirements are met:

a. The rubberized surface shall be resistant to chlorine solutions in a wet environment.

b. The applicant shall submit an operation and maintenance manual from the manufacturer of the rubberized surface as part of the application showing that the rubberized material is suitable for this purpose.

c. The rubberized surface shall be installed on a flat or concave rigid surface.

d. The rubberized surface shall not be installed in a cave structure if it is to be continuously wetted in a dark and enclosed environment.

e. The underlying concrete surface shall be sufficiently pitched to allow water to flow to a surface drain.

f. The Department may periodically require the owner to remove an area of the rubberized surface for inspection for contamination under the surface.

g. The rubberized surface shall be cleaned at least weekly.

MARICOPA COUNTY ENVIRONMENTAL HEALTH CODE

CHAPTER VI

BATHING PLACES - PUBLIC AND SEMIPUBLIC SWIMMING POOLS

SECTION 11

NOT USED

MARICOPA COUNTY ENVIRONMENTAL HEALTH CODE

CHAPTER VI

BATHING PLACES - PUBLIC AND SEMIPUBLIC SWIMMING POOLS

SECTION 12

ARTIFICIAL BATHING LAKE

REGULATION 1. General Health and Safety Requirements

The design, construction, operation and maintenance of artificial bathing lakes shall be such as to reduce to a minimum the risks of drowning, injury and transmission of disease.

a. The facilities operation shall be under the close supervision of the owner or his designated representative.

b. The operator(s) shall perform tests or have tests performed by a certified laboratory to show the degree of compliance with these regulations and shall record the results of the tests in the daily operation record. Such records shall be maintained on the premises and made available to the Department upon request. They shall include as a minimum:
   1. pH - once daily
   2. Bacteriological results - weekly
   3. Turbidity, as measured by Secchi disk - once daily
   4. Temperature - once daily

c. Persons with sore or inflamed eyes, colds, nasal or ear discharges, boils or other acute or obvious skin or body infections, or cuts shall be excluded from the artificial bathing lake. No person in or at an artificial bathing lake shall commit, or be permitted to commit, any act prejudicial to the life or health of any other person using the artificial bathing lake. Domestic animals shall be excluded from the bathing area(s).

REGULATION 2. Water Quality - Hazard Control

The waters and environs of all bathing area(s) shall be kept free of slime, algae, aquatic growths, organic sediments, debris and other offensive materials. The breeding of mosquitoes, midges, water snails, and other aquatic pests shall be properly controlled.

a. The water shall, at all times, be such that there is no irritation to the eyes or the skin of the bathers, nor other objectionable physiological effects to the bathers.

b. Operators of a public or semipublic natural bathing place, a semi-artificial bathing place, or an artificial lake shall ensure that the public or semipublic natural bathing place, semi-artificial bathing place, or artificial lake meets the narrative and numeric water quality standards in 18 A.A.C. 11, Article 1 when the public or semipublic natural bathing place, semi-artificial bathing place, or artificial lake is open for water contact recreation. Operators shall collect one (1) sample per one (1) acre in the bathing area and one (1) sample per ten (10) acres of overall lake surfaces. Samples shall be collected and examined in accordance with the procedures outlined in the latest edition of "Standard

Methods for the Examination of Water and Wastewater". The owner shall collect and submit weekly water samples for bacteriological examination on a routine basis while the bathing area is in active use.

c. An artificial bathing lake shall be located so that it will not be adversely affected by the discharge of sewage or objectionable industrial wastes; nor shall it be so located that by its use it will affect the source of supply of a public water system.

d. Water used in an artificial bathing lake must be obtained from a certified public water supply or an approved source. Treated sewage effluent is not an approved source.

e. Water clarity shall be maintained free of turbidity and shall be sufficiently clear such that a Secchi disk is visible at a depth of five (5) feet from the side of a boat in the designated swimming area.

f. When the bacteriological, pH or water clarity standards are not met, water contact recreation shall be halted and shall not commence until written approval is obtained from the Department.

REGULATION 3. Approval of Plans and Construction Required

a. No artificial bathing lake shall be constructed, nor shall any bathing lake now or hereafter existing be materially altered or enlarged before complete plans and specifications, together with such further information as the Department may require, has been submitted to and received the written approval of the Department.

b. Approval of artificial bathing lakes will be based upon the results of a sanitary survey of the drainage area and results of examination of bacteriological, chemical and physical quality of the water in the proposed bathing area.

General construction plans submitted to this Department shall include, but are not limited to, the following:

1. A sanitary survey of the area's watershed.
2. The water circulation and dilution patterns.
3. A description of the proposed activities; and
4. Grading and drainage plans.

Every proposed operation shall be adequately considered by a detailed study to anticipate all potential hazards of mechanical, chemical, microbiological and other relevant dangers.

c. An application or approval of any proposed artificial bathing lake shall be made to the Department by the owner on forms furnished by the Department. Such application for approval shall accompany the plans and specifications at the time of submission to the Department for review.

d. If any additional construction or modification of the facility shall be required, plans and specifications of the proposed facility shall be submitted for approval as required in Regulation 3, b.

e. Plans and specifications shall be submitted to the Department at least 30 days prior to the date upon which action is desired. Plan documents submitted for approval shall include a general plot plan, plans and specifications showing the shape, dimensions, water treatment and pumping facilities, piping arrangement and sizes, source of water supply, method of disposal of wastes, together with all pertinent data upon which the design is based, including capacities of the various units, safety equipment, and other information necessary to permit a clear and full understanding of the proposed project. Detailed plans of bathhouses, dressing rooms, toilets, recreational and other bathing appurtenances shall be included.

f. All plans specifications submitted to the Department for approval must have been prepared by, or under the supervision of, a currently Registered Arizona Professional Engineer who is licensed to practice in the State of Arizona, who shall certify that the plans comply with these Regulations.

g. All work shall conform to approved plans and specifications. Should it be necessary or desirable to make any changes in the approved plans and specifications of the proposed work, revised plans and specifications, together with a written statement of the reasons for such change, shall be submitted to the Department for review. Approval must be obtained in writing before the work affected by the change is undertaken.

h. The Department will, upon receipt from the applicant of reasonable advance notice of readiness therefore and of the required inspection fees, make necessary inspections to determine that the artificial bathing lake is in compliance with these Regulations. It shall be deemed acceptable only after examination and issuance of written approval by the Department.

i. Before initial approval shall be given for the operation of an artificial bathing lake, the currently registered engineer shall certify that the completed bathing lake is constructed in accordance with the approved plans and specifications.

REGULATION 4. Permit Required

No artificial bathing lake shall be maintained or operated in Maricopa County without a permit in force issued by the Department. The permit shall be displayed in a conspicuous place on the premises where it may be readily observable by the public.

REGULATION 5. Standards and Construction

a. Shape: The bathing shorelines shall be formed and maintained in wide curves, shall avoid sharp angles or narrow confined inlets and shall otherwise avoid any design likely to impede circulation, obstruct visibility, or create any public health or safety hazard. A supplemental means of circulation (inflow and outflow of water) shall be provided. Such supplemental circulation methods require approval by the Department.

b. No natural or artificial projections may adjoin a bathing area, which would increase the freeboard to more than eight (8) inches.

c. All swimming/wading and similar water contact activities shall be restricted to specified areas which shall be conspicuously marked by bright orange colored buoys delineating the other perimeter of said areas. Such buoys shall be placed at proper intervals not greater than 100 feet, be of such size to be visible at a distance of 100 feet, and be marked with large contrasting colored numerals or signs sufficient to inform users of the water depth at such buoys, and shall otherwise be sufficient to warn users and boaters of the water swimming area limits. The bottom slope of the swimming/wading areas from the shoreline to the five (5) foot depths shall be not more than one (1) foot vertical in each 12 feet horizontal. Access to swimming, bathing and wading areas shall be controlled.

d. Bottom composition: The bottom of the swimming and wading area from the shoreline to the five (5) foot depth shall be covered with river-run rounded sand particles light in color or other approved light-colored material, and sufficiently thick to prevent abrasion of feet by rocks and to contrast a submerged bather's body against a light-colored background.

e. Deep swimming area: Where the depth of the artificial bathing lake exceeds five (5) feet a deep swimming area may be provided. This area shall have a relatively smooth bottom and should be free from projections.

Diving may be permitted in the deep swimming area provided that:

1. Depth of water is a minimum of 12 feet;
2. This depth must extend a minimum of 20 feet in front of the end of the board or diving platform;
3. The diving board or diving platform must be secured to a rigid structure;
4. A lifeguard must be stationed in the immediate vicinity of the diving area; and
5. The diving board or diving platform height shall not exceed one (1) meter.
6. The area shall be conspicuously marked by bright orange colored buoys located at the outer perimeter of said areas. Such buoys shall be placed at proper intervals of not greater than 25 feet and be of such size as to be visible from a distance of 100 feet and marked with large contrasting numerals or signs sufficient to inform users of water depth at such buoys and shall otherwise be sufficient to warn other users and boaters of the diving area limits.
7. The others shall provide and maintain on file with Maricopa County a current certificate of public liability insurance evidencing minimum limits of seven million dollars ($7 million) combined single limit for bodily injury and property damage liability. The certificate must further clearly indicate that Maricopa County is an additional insured and that no changes or modifications shall be effective in the coverage without 30 days prior notice to the offices of the Maricopa County Environmental Services Department, Division of Environmental Health.
8. Slides and other similar water recreation devices must comply with the standards for diving.

f. Artificial bathing lakes which allow power boats, jet skis, or any other vehicle or device with an internal combustion engine shall prohibit wading, swimming and bathing.

g. Water levels in artificial bathing lakes shall be continuously maintained at the design level of plus or minus six (±6) inches.

h. Surface drainage: Except for natural springs and streams, all surrounding surface drainage, such as from streets, gutters, and every other significant source of polluted water from the land surrounding the body of water, shall be properly diverted away from the artificial bathing lake and disposed of in such a manner so as to not create a public nuisance.

REGULATION 6. Lifeguards

a. At least one (1) lifeguard and one (1) elevated lifeguard chair shall be provided for each 2,000 square feet of designated bathing area or 150 bathers as approved by the Department.

b. A lifeguard safety plan shall be submitted which includes stationing and areas of responsibility. The plan shall include and consideration is given to depth, line of sight, bathing loads, training procedures, emergency procedures, lifeguard rotation, and other special conditions, which might affect the safety of the bathers. The plan must ensure the safety of bathers and be on file with the Department.

c. Lifeguards shall be in constant attendance during bathing hours and no bathers shall be permitted in the designated swimming area(s) unless lifeguards are provided.

REGULATION 7. Safety Equipment

Safety equipment shall be provided and maintained and will include, but is not limited to two (2) ring buoys, each with 50 feet of one-fourth (1/4) inch rope attached and a rescue boat. This boat shall be made available to the Department for physical standard measurements.

REGULATION 8. Signs

a. No person or entity shall allow use of any artificial bathing lake without posting prominent signs indicating, in conspicuous letters at least four (4) inches high, or as directed by the Department, the depth of the water in the bathing area and differentiating the swimming area from other recreational area(s) uses.
b. Signs shall be posted conspicuously on all access points in conspicuous letters at least four (4) inches high, stating "WARNING, NO SWIMMING ALLOWED WITHOUT A LIFEGUARD ON DUTY" and "SWIM ONLY" in the designated bathing area(s).
c. Signs shall be so located or constructed as to be protected from the elements.

REGULATION 9. Bathhouses

The provisions of Section 5, Regulation 1 shall apply to all artificial bathing lakes, except that hot water for showers and lavatories will not be required.

REGULATION 10. Lighting

It is the responsibility of the owner to ensure that all areas used for water contact recreation are adequately lighted during hours of use.

MARICOPA COUNTY ENVIRONMENTAL HEALTH CODE

CHAPTER VI

BATHING PLACES - PUBLIC AND SEMIPUBLIC SWIMMING POOLS

SECTION 13

WATER SLIDES

REGULATION 1. Additional Standards and Requirements

The Department may, at its discretion, establish additional standards or requirements for water slides and recovery pools, taking into consideration any unique features of the water slide and recovery pool and the conditions under which it will be operated. This section does not cover drop slides, slides with a slope greater than ten (10) percent or any slide in which the rider uses any kind of equipment during use of the slide.

REGULATION 2. Construction, Design, and Specifications

a. The slide plans and specifications shall be incorporated into swimming pool application forms, plans and specifications prepared and submitted pursuant to Chapter VI, Section 1, Regulation 2 of the Maricopa County Environmental Health Code.
b. Plan sheets and specifications addressing the structural aspects of the slide tower and the slide support structure shall carry the seal and signature of a registered civil or structural engineer licensed to practice in the state of Arizona.
c. Structural design calculations for the slide tower and the slide support structure shall be submitted and shall carry the seal and signature of a registered civil or structural engineer licensed to practice in the state of Arizona.
d. Soil studies and calculations performed in conjunction with the slide tower and support structure design shall carry the seal and signature of a registered professional engineer licensed to practice in the state of Arizona.
e. Construction of the slide and its appurtenances shall be monitored by the civil or structural engineer of record. This engineer shall certify that the slide was constructed in conformance with the approved plans or as reflected on the sealed as-built plans.
f. Splashdown area must be cordoned off with buoy lines if not a dedicated slide pool only.
g. The Department may consider sufficient, sealed design documentation from credentialed waterslide design authorities and/or require a slide splashdown pool to conform to the following dimensions:
    1. There shall be at least six (6) feet clearance from the side of the flume to the recovery poolside wall.
    2. There shall be at least six (6) feet clearance between the sides of two (2) adjacent slides.
    3. The slide shall terminate at or below the water line and the slide terminus shall be in at least three and one-half (3 1/2) feet of water.

4. The engineer or the slide manufacturer must provide calculations to justify the length of runout. In no case shall the runout be less than 25 feet.
5. The exit from the recovery pool area must consist of a set of stairs located at the opposite end of the recovery pool from the slide entrance.
6. Four (4) feet of walkway shall be provided around at least three (3) sides of the recovery pool and behind the slide in semipublic pools, and ten (10) feet of walkway shall be provided around at least three (3) sides of the recovery pool and behind the slide in public pools.
7. There must be at least four and one-half (4 1/2) feet (54 inches) clearance between the invert of the open flume and any object above the flume.
8. When the slide is not in use, a suitable barrier shall be placed at the bottom of the stairs of the slide to prevent bathers from entering the slide.
9. The area on the deck below the water slide and the stair tower must be fenced and made unavailable to pedestrian traffic.
10. Two (2) emergency shut off switches shall be provided for each slide circulation pump, one easily accessible by the lifeguard at the top of the flume and one (1) easily accessible by the lifeguard in the pool area.
11. A training program for the lifeguards shall also be submitted with slide pool plans for approval.

REGULATION 3. Lifeguards

A minimum of two (2) lifeguards shall be on duty at the slide whenever it is in use. One (1) lifeguard at the top of the tower, and one (1) lifeguard at in the splashdown area. The lifeguards shall be in visual or voice contact at all times.

REGULATION 4. Operation, Maintenance and Management

An operation and maintenance manual for the slide shall be prepared and submitted for review and approval. The manual shall contain, but not necessarily be limited to all of the following:

a. A list of all mechanical equipment and equipment maintenance schedules,
b. Slide tower and support structure inspection and maintenance schedule,
c. Slide flume inspection and maintenance schedule,
d. Slide safety and supervision provisions, and
e. A lifeguard deployment plan.

REGULATION 5. Instruction Signage

A sign shall be posted at the entrance of the slide tower informing bathers of the necessary safety procedures and informing bathers to follow the instructions of the lifeguard. The sign shall contain the following as a minimum:

a. Follow the instructions of the lifeguard,
b. One rider at a time,
c. Feet first sliding only,
d. No horseplay,
e. Exit slide recovery area immediately,
f. No kneeling or standing on the slide,
g. Keep hands and feet inside slide,

h. No riders shorter than 42 inches,
i. The manufacturers other suggested rules shall be incorporated in the sign, and
j. Persons not following the safety procedures or the instructions of the lifeguard shall be excluded from the slide.

CHAPTER VI

BATHING PLACES - PUBLIC AND SEMIPUBLIC SWIMMING POOLS

SECTION 14

ZERO DEPTH ENTRY POOLS

In addition to complying with the Regulations in Sections 1, 2, 3, 4, 5 and either 6 (Public Pools) or 7 (Semi-Public Pools) of this Chapter, Zero Depth Entry Pools shall comply with the following Regulations:

REGULATION 1. Circulation System

a. A zero depth entry pool shall have a turnover rate for the area of the pool up to a depth of two (2) feet of at least once every hour.

b. A zero depth entry pool shall be equipped with a trench drain running the entire length of the entry. It shall be covered with a removable grate to facilitate cleaning. The trench drain shall be located so that the water surface of the pool falls no higher than the middle of the grate. The grate shall be designed to eliminate the possibility of injury to bathers.

c. There shall be a minimum of two (2) floor inlets, plumbed not more than 15 feet apart and no further than ten (10) feet from the zero depth entry.

REGULATION 2. Floor

a. At the entry, the deck/floor must slope toward the pool. The slope of the deck may not exceed one (1) foot in 12 feet.

b. All floor materials must be non-slip to a minimum depth of two (2) feet.

REGULATION 3 Handrails

Handrails shall be provided at the ends of the zero depth entry.

APPENDIX A

ILLUSTRATION A. DIVING WELL DIMENSIONS

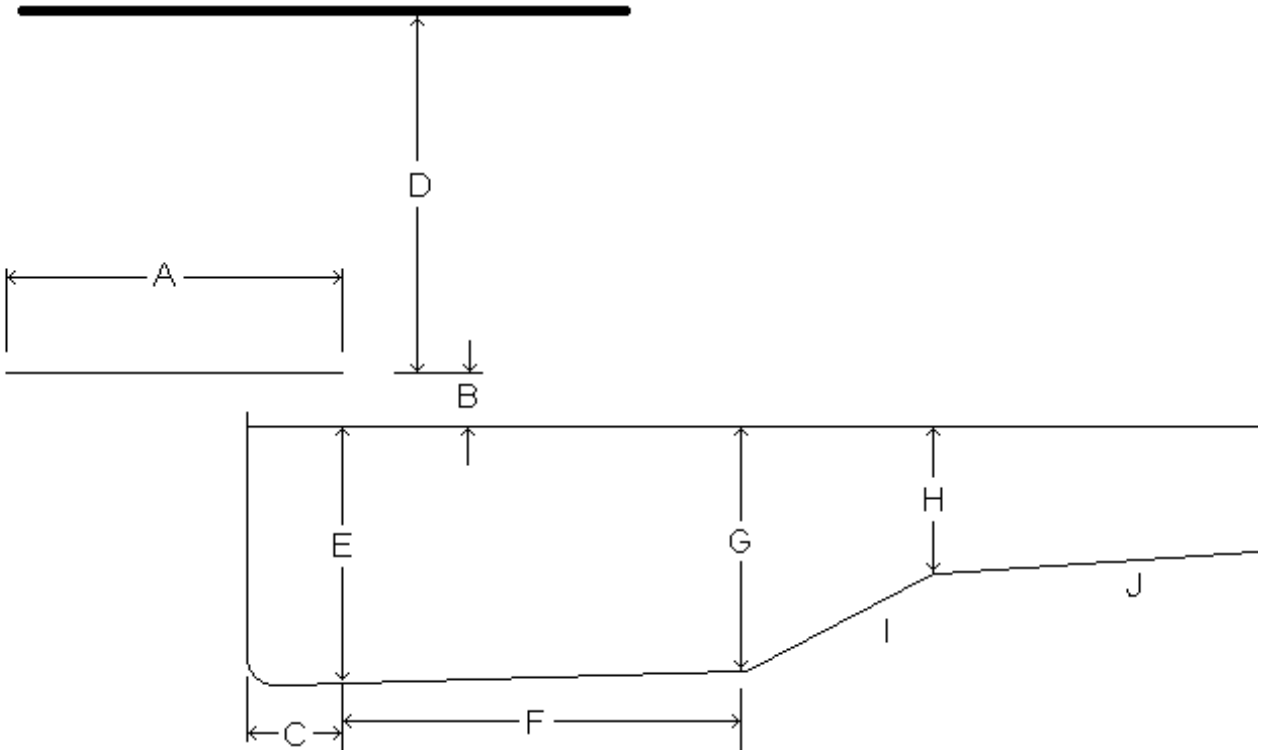

ILLUSTRATION A. DIVING WELL DIMENSIONS FOR SWIMMING POOLS

Note: This profile does not apply to a special use pool that is designed for competitive diving.

A	Maximum length of diving board	10 feet
B	Maximum height of board above the water	20 inches
C	Overhang of the board from wall	Minimum: 2 feet - Maximum: 3 feet
D	Minimum distance to an overhead structure	15 feet
E	Minimum depth of water at the plummet	9 feet
F	Distance from plummet to start of upslope	18 feet
G	Minimum depth of water at start of the upslope	Depth of water at plummet minus 6 inches
H	Depth of water at the breakpoint	5 feet
I	Maximum slope: breakpoint towards deep end	1 foot of fall in 3 feet
J	Slope of bottom in shallow area	1 foot of fall in 10 feet
	Minimum width of pool in diving area	20 feet
	Minimum distance from plummet to pool wall at the side	10 feet

APPENDIX A

ILLUSTRATION B

MINIMUM DISTANCE REQUIREMENTS FOR DIVING BOARDS

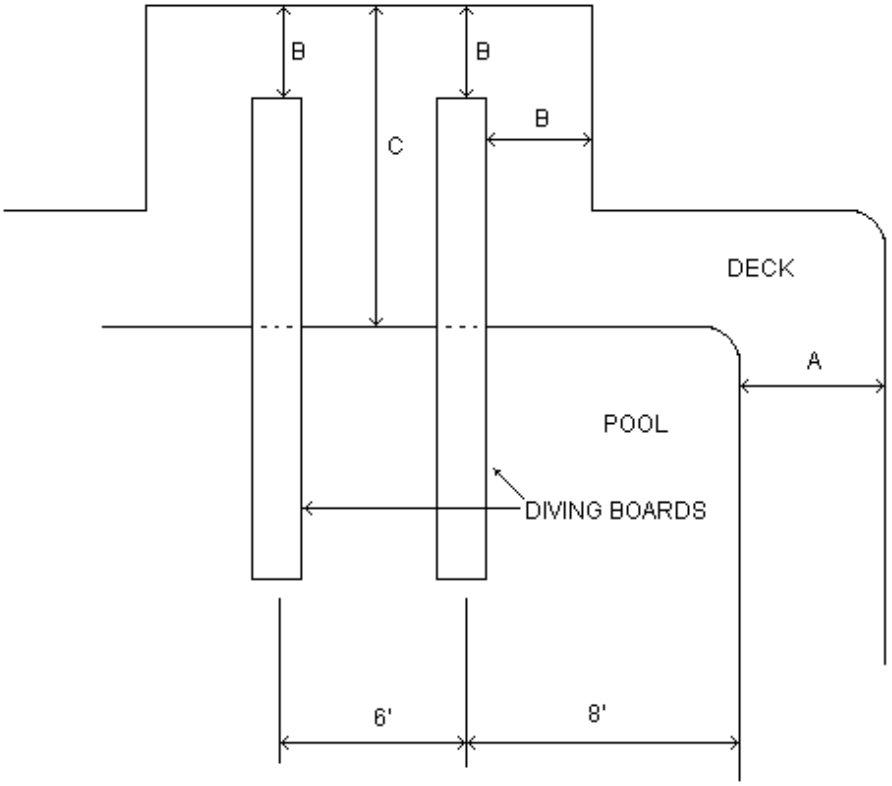

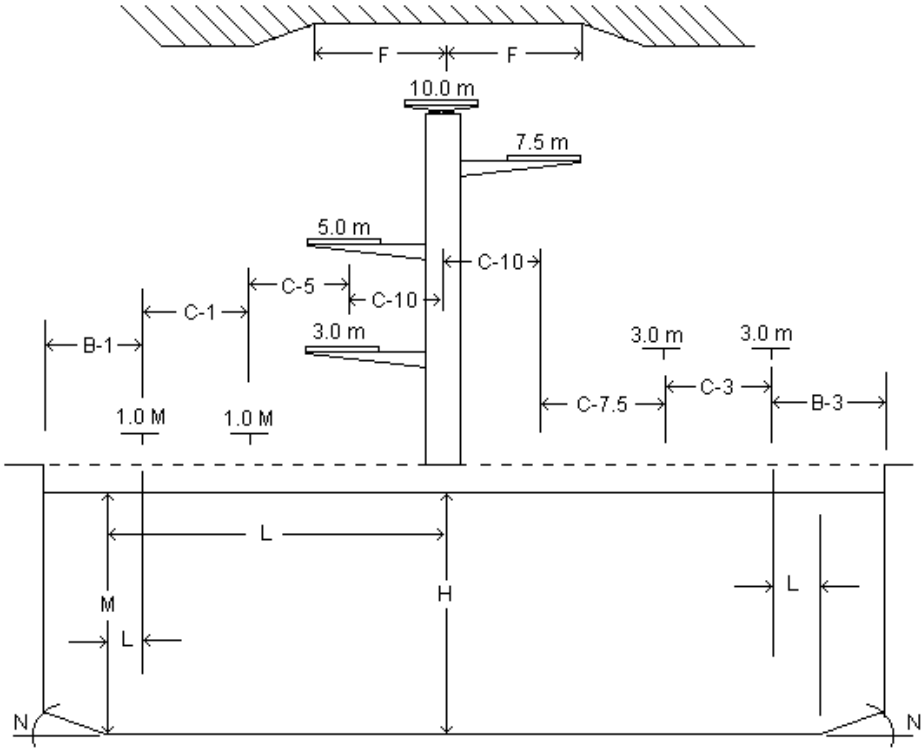

APPENDIX A

ILLUSTRATION C

	PUBLIC	SEMIPUBLIC
A	10	4
B	5	4
C	15	—

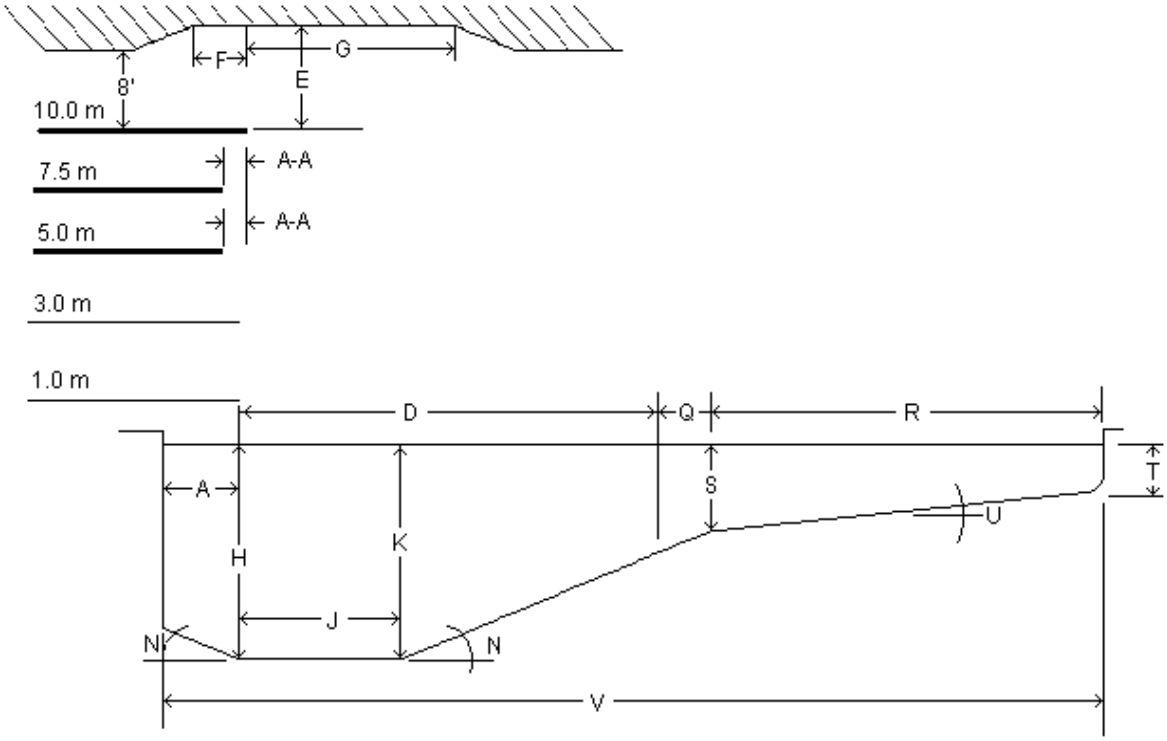

APPENDIX A

ILLUSTRATION D

DIVING BOARDS, PUBLIC AND SEMIPUBLIC POOLS
MINIMUM DIMENSIONS - PUBLIC POOLS

		SPRINGBOARD		PLAT FORM				
		1 METER	**3** METER	**1** METER	**3** METER	**5** METER	**7.5** METER	**10** METER
A	From plummet: back to pool wall	5'	5'	4'	4'	4'	5'	5'
A -A	**:** back to platform directly below					2' 6"	2' 6"	2' 6"
B	From plummet to pool wall at side	10'	12'	10'	10'	14'	15'	17'
C	From plummet to adjacent plummet	6'	6'			7'		9'
D	From plummet to pool well ahead	29'	34'	26'	31'	34'	36'	45'
E	Plummet from board to ceiling overhead	16'	16'	10'	10'	10'	10' 6"	11'
F	Clear overhead behind and each side plummet	8'	8'	9'	9'	9'	9'	9'
G	Clear overhead ahead of plummet	16'	16'	16'	16'	16'	16'	16'
H	Depth of water at plummet	11'	12'	11'	11'	12'	13' 6"	15'
J	Bottom distance ahead of plummet	20'	20'	16'	20'	20'	26'	40'
K	Bottom depth ahead of plummet	10' 9"	11' 9"	10' 9"	10' 9"	11' 9"	13'	14'
L	Bottom distance each side of plummet	8'	10' 6"	7'	9'	14'	15'	17'
M	Bottom depth each side of plummet	10' 9"	11' 9"	10' 9"	10' 9"	11' 9"	11' 9"	14'
N	Maximum slope of pool bottom	1:3	1:3	1:3	1:3	1:3	1:3	1:3
P	Maximum slope of ceiling	1:3	1:3	1:3	1:3	1:3	1:3	1:3
R	Shallow portion, 30’ max	2' min	3' max					
S	Depth at change of slope	5'	5'	5'	5'	5'	5'	5'
T	Depth at shallow end,	2' min 3' max	2' min 3' max	2' min 3' max	2' min 3' max	2' min 3' max	2' min 3' max	2' min 3' max
U	Slope in shallow end	1:10	1:10	1:10	1:10	1:10	1:10	1:10
V	Total Length (20' shallow end)	62' 3"	65' 3"	57' 3"	61' 3"	64' 3"	75'	92'

APPENDIX B

AVERAGE WIDTH OF ALL SWIMMING POOLS

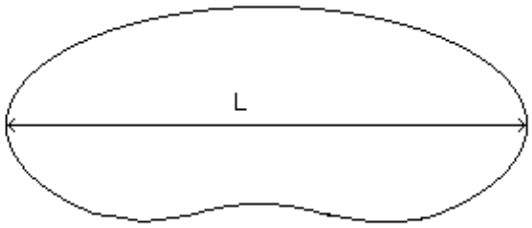

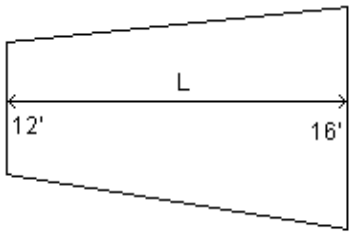

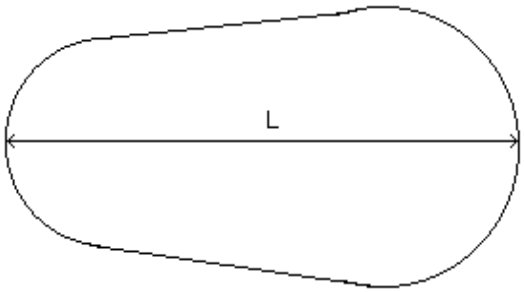

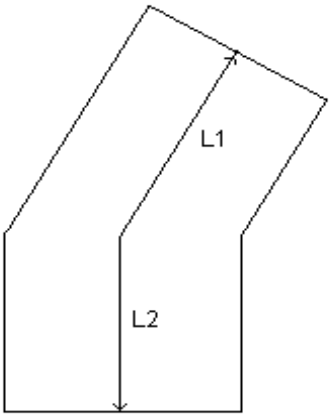

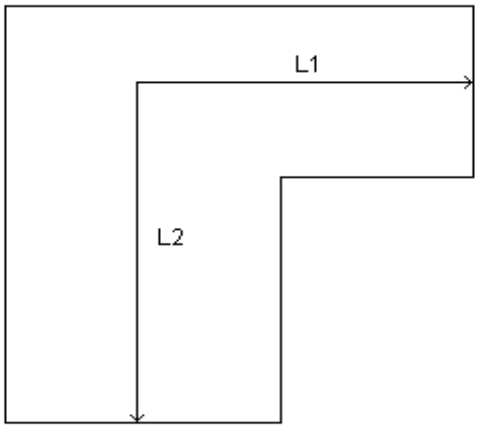

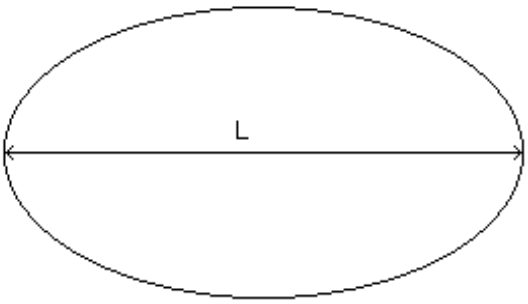

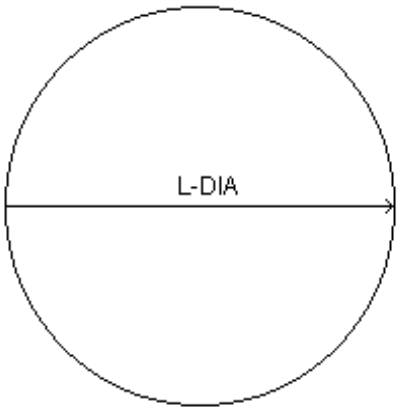

APPENDIX C

PUBLIC SWIMMING POOLS FENCING REQUIREMENTS - 1989 CODE

a. All public pools and walkways adjacent to such pools shall be enclosed by a durable fence or wall at least six (6) feet high to provide bather control while the pool is in operation, to exclude animals (except service animals), and to prohibit any person from using the pool except when a lifeguard is on duty. Fences, walls or artificial barriers shall:

   1. Be constructed so as to afford no external handholds or footholds;

   2. Be of materials, which are impenetrable by small children, dogs, livestock, etc.;

   3. Be a minimum of six (6) foot high above the highest practical foothold, curb, or (in the case of a combination fence) the base wall;

   4. Have openings or spacings of such size that a spherical object four (4) inches in diameter cannot pass through; and

   5. Be equipped with a self-closing and positive self-latching closure mechanism or a locking closure located at or near the top of the gate.

b. Mechanical filtering, disinfection and recirculating equipment must be protected from tampering by a suitable enclosure or fence.

APPENDIX D

SEMIPUBLIC SWIMMING POOLS FENCING REQUIREMENTS - 1989 CODE

a. All semi-public swimming pools shall be protected by a fence, wall or other approved barrier from all parts of the premises not directly related to the swimming pool. Fences, walls or artificial barriers shall:

   1. Be constructed so as to afford no external handholds or footholds;

   2. Be of materials that are impenetrable by small children, dogs, livestock, etc.;

   3. Be of four (4) foot minimum height;

   4. Be equipped with a self-closing and positive self-latching closure mechanism located at or near the top of the gate; and

   5. Have openings or spacings of such size that a spherical object four (4) inches in diameter cannot pass through.

b. In addition, the mechanical filtering, disinfection and recirculation equipment must be protected from tampering by a suitable enclosure or fence.

MARICOPA COUNTY ENVIRONMENTAL HEALTH CODE

CHAPTER VII

FOOD EMPLOYEES/CERTIFIED FOOD PROTECTION MANAGERS

REGULATION 1. Definitions

a. "Certified Food Protection Manager" means any person who supervises/trains a Food Employee(s) to follow all food safety regulations (Chapter VII and Chapter VIII). The manager shall be a full time employee of the individually permitted food establishment where employed.

b. "Certified Food Protection Manager Card" means a document issued by the Department certifying that an individual has fulfilled the requirements to work as a Certified Food Protection Manager.

c. "Food Employee" Shall have the same meaning as ARS §11-269.12 food handler, and means any person who handles, prepares, serves, sells or gives away food for consumption by persons other than his or her immediate family, or who handles utensils and equipment appurtenant thereto. The term does not include persons in establishments regulated under this code who handle food or drink exclusively in closed crates, cartons, packages, bottles or similar containers in which no portion of the food or drink is exposed to contamination through such handling.

d. "Limited Use Food Employee Certificate" means a document issued by the Department certifying that an individual with a disability has fulfilled the requirements to perform specific low public health risk activities.

e. "Person in Charge" means the individual present at a food establishment who is responsible for the operation at the time of inspection.

f. "Fee Waived Food Employee Certificate" means a document issued by the department certifying that an individual working under a Maricopa County Board of Health fee waiver has fulfilled the training requirements.

REGULATION 2. Person in Charge and Certified Food Protection Manager

a. The Person in Charge of a food establishment shall ensure Food Employee(s) are trained on foodborne disease prevention in accordance with Chapter VIII, Section 2 of the Maricopa County Environmental Health Code, within 30 days of performing any Food Employee activity.

b. The Person In Charge of a Temporary Food Establishment, Seasonal Food Establishment, or Special Event Food Establishment shall ensure Food

Employee(s) are trained on foodborne disease prevention in accordance with Chapter VIII, Section 2 of the Maricopa County Environmental Health Code, prior to the start of the event.

c. A valid Food Employee certificate or identification card as described in Regulation 4 of this chapter, may serve as documentation of training.

d. Each food establishment shall maintain on its premises a separate file containing Food Employee training documentation.

e. Each food establishment shall have at least one (1) Certified Food Protection Manager on staff, who is either physically present or available by electronic or telephonic means whenever the food establishment is in operation.

f. Each food establishment shall replace the Certified Food Protection Manager within ninety (90) days of separation.

g. A Certified Food Protection Manager shall obtain a Certified Food Protection Manager Card from the Department after successful completion of a test from a food protection manager certification program as described in the 2013 FDA Food Code, § 2-102.20. A Certified Food Protection Manager Card shall expire five (5) years from the date of successful completion of a Certified Food Protection Manager test.

REGULATION 3 Food Employee Certificates

The Department may issue the following Food Employee certificates:

a. A Limited Use Food Employee Certificate may be issued to reasonably accommodate a person with a disability.

1. A person with a Limited Use Food Employee Certificate shall be under direct supervision of the food establishment's Certified Food Protection Manager at all times when handling food or food contact surfaces.

2. The food establishment's Certified Food Protection Manager shall be responsible for all Limited Use Food Employee Certificate applicants, for requesting a Department onsite visit to have the Department officially document any training and to witness the applicant's associated functions and duties assigned by the Certified Food Protection Manager.

3. Upon Department approval, the applicant will receive a Limited Use Food Employee Certificate.

b. A Fee Waived Food Employee Certificate may be issued to:

1. A Food Employee for which Maricopa County Board of Health has waived payment of associated fees due to their charitable or nonprofit status.

2. A Food Employee enrolled in a K-12 culinary arts school program or other similar curriculum based programs for which Maricopa County Board of Health has waived payment of associated fees.

REGULATION 4. Food Employee Training Documentation

a. Food employee training documentation may be shown by the following:

1. A valid Food Employee certificate, or identification card, issued by another county within the State of Arizona; or

2. A valid Food Employee certificate of successful completion of a food handler training course given by the Department; or

3. A valid Food Employee certificate of successful completion of a third party food handler training course that meets all state of Arizona statutory requirements, including compliance with the American National Standards Institute/ASTM International Standard E2659-09.

b. A certificate issued under paragraphs 2 and 3 of regulation 4 shall expire three (3) years from the date of issue.

REGULATION 5. Communicable Disease

a. Notwithstanding any other provision in this code, should the Environmental Health Officer reasonably believe that a Food Employee or Certified Food Protection Manager may be a carrier of or infected with a communicable disease which can be transmitted to the public, through food, the environmental health officer shall immediately notify the Director of the Maricopa County Department of Public Health, (MCDPH) who may: (1) examine or cause the examination of the Food Employee, and (2) secure from the Food Employee or Certified Food Protection Manager appropriate specimens or fluids of body discharge and cause them to be examined at a laboratory approved by the Director of MCDPH or by the Arizona Department of Health Services. The Environmental Health Officer may exclude from any food service work any Food Employee or Certified Food Protection Manager who has or demonstrates any illness or symptoms of a communicable disease that may be transmitted through food from food service

work. A person so excluded shall not thereafter engage in food service work until approved by the Director of MCDPH.

b. If required by the Director of MCDPH, a Food Employee or Certified Food Protection Manager shall furnish such information, submit to physical examination, and submit such specimen for laboratory examination, as the MCDPH Director may require for the purpose of determining freedom from communicable disease. The failure of a Food Employee or Certified Food Protection Manager to do so to the satisfaction of the Director of MCDPH, shall be sufficient basis for excluding the Food Employee or Certified Food Protection Manager from such occupation.

c. A person excluded from food service work by the Director of MCDPH shall be entitled to a hearing on written request made to the Director of MCDPH within ten (10) days of exclusion. If a request for hearing is received, a hearing shall be held by the MCDPH Director or their designee within five (5) working days.

REGULATION 6. Exemptions

Any food establishment, as defined in Chapter VIII of this code, exclusively serving prepackaged foods is exempt from Regulation 2 Paragraph e. of this Chapter.

MARICOPA COUNTY ENVIRONMENTAL HEALTH CODE

CHAPTER VIII

FOOD, FOOD PRODUCTS, FOOD HANDLING ESTABLISHMENTS

SECTION 1

GENERAL PROVISIONS

REGULATION 1. Definitions

(1) "A.A.C." means the Arizona Administrative Code.

(2) "Adulterated" means possessing one or more of the conditions enumerated in A.R.S. § 36-904 (a) or listed below:

(a) It does not meet the requirements of the regulations and definitions for standard, fill and quality of the Federal Food and Drug Administration.

(3) "Advanced Preparation" means food preparation with multi-step handling of raw and/or pre-cooked ingredients including the cooking, cooling, and re-heating of potentially hazardous foods (time/temperature control for safety food) for holding or immediate service, or where significant risk factors contributing to foodborne-illness may occur as determined by the Department.

(4) "Adventure Food Establishment" means and refers to a food establishment that operates in conjunction with a trail ride or similar type activity and prepares or serves food to participants.

(5) "Applicant" means the following person requesting a permit:

(a) If an individual, the individual who owns the food establishment or their designee;

(b) If a corporation, any 2 officers of the corporation;

(c) If a limited liability company, the designated manager or, if no manager is designated, any 2 members of the limited liability company;

(d) If a partnership, any 2 of the partners;

(e) If a joint venture, any 2 individuals who signed the joint venture agreement;

(f) If a trust, the trustee of the trust;

(g) If a religious or nonprofit organization, the individual in the senior leadership position within the organization;

(h) If a school district, the superintendent of the district;

(i) If an agency, the individual in the senior leadership position within the agency; or

(j) If a county, municipality or other political subdivision of the state, the individual in the senior leadership position within the county, municipality, or political subdivision.

(6) "Approved" means acceptable to the Department or to the food regulatory agency that has jurisdiction based on a determination of conformity with principles, practices and generally recognized standards that protect public health.

(7) "A.R.S." means the Arizona Revised Statute.

(8) "Bakery" means any place in which is carried on the process of mixing, compounding, cooking, baking, or manufacturing any bakery product. A bakery is a food establishment that exclusively prepares bakery items for immediate service on the premises, directly to a consumer and/or for resale or redistribution by a retail food establishment.

(9) "Bakery Product" means any bread, biscuits, pretzels, crackers, buns, rolls, macaroni or any similar pastes, pastries, cakes, doughnuts, pies or other food products of which flour or meal is the principal ingredient. Bakery products shall include the materials from which the above are manufactured, but shall not include packaged mixes.

(10) "Bare Hand Contact Exemption" is an exemption that is granted by the Department to an establishment that demonstrates a reduced health risk to hand contact.

(11) "Bottled Water & Beverage Plant" means a food establishment in which is carried on the process of bottling, canning or packaging any beverage for human consumption.

(12) "Boarding Home" means a transient dwelling establishment that also operates a food establishment where food is provided to patrons along with resident accommodations:

(a) Class 2 - operations with only limited preparation of menu items.

(b) Class 5 - operations with advanced preparation or where the consumers specifically include populations highly susceptible to foodborne illness.

(13) "Bottle" means and includes any container used for the finished product regulated by this code.

(14) "Bottled Drinking Water" means water that is sealed in bottles, packages, or other containers and offered for sale for human consumption, including bottled mineral water and is in compliance with A.A.C. Title 9, Chapter VIII, Sections 201 through 209, excluding Sections 202 and 208, Paragraphs a & b.

(15) "Class" means a permit subtype. A permit subtype class is based on the food main menu items, the degree of food preparation activities or the amount of pre-packaged food. There are five classes, one (1) through five (5).

(16) "Code of Federal Regulations (CFR)" means the compilation of the general and permanent rules published in the Federal Register by the executive Departments and agencies of the Federal Government which:

(a) Is published annually by the U.S. Government printing office; and

(b) Contains FDA rules in 21 CFR, USDA rules in 7 CFR and 9 CFR, EPA rules in 40 CFR, and wildlife and fisheries rules in 50 CFR, as amended at the time of their application.

(17) "Commissary" means a food establishment that acts as a base of operation for a mobile food establishment, food vending establishment or an adventure food establishment.

(a) Class 2 – provides only pre-packaged food items.

(b) Class 4 - provides pre-packaged food items and facilities for food preparation.

(18) "Competition Food Event" means any event that operates for not more than fourteen (14) consecutive days in which the competitors are vying with one another for profit, prize or position based on one similar type of food prepared by each competitor. Complimentary samples not to exceed 2 ounces may be given to the general public.

(19) "Confectionary Food Establishment" means any place in which the processes are carried on of mixing, compounding, cooking, baking, or manufacturing any non-potentially hazardous (non-time/temperature control for safety) bakery products

and confectionary items to be immediately served on that premises, directly to a consumer, and/or for resale or redistribution by a food establishment.

(20) "Converting" or "Converted" or "Conversion" when used in regards to frozen desserts shall be deemed to mean the process by which a frozen dessert is changed from a frozen to a semi-frozen form without any change in the ingredients thereof.

(21) "Damaged Food" means any food, whether or not packaged, which has been subjected to deleterious or destructive influences from fire, heat, freezing, radiation, physical damage, total or partial immersion in sewage, contaminated liquids or water, excessive shelf life or storage, or from any other circumstances, and which is held, offered for sale, sold, or given away for human consumption.

(22) "Damaged Food Establishment" is a food establishment that specializes in the recovery, redistribution or resale of damaged food.

(23) "Daycare Foodservice" is a food establishment which prepares food for immediate service on-site, or directly to a consumer where the consumers are facility staff and daycare children.

(24) "Department" means the Maricopa County Environmental Services Department.

(25) "Dispensing Freezer (Frozen Desserts)" means the type of equipment which freezes or partially freezes frozen desserts so they are served in a soft condition for sale to the retail customer. Dispensing freezers shall meet the minimum standards of design to construction as formulated by an American National Standards Institute Accredited Certification Program; only that equipment which is designed and constructed in accordance with the applicable standard may be installed as new or replacement equipment.

(26) "Eating & Drinking Establishment" is a food establishment that prepares food for service on the premises or take-out delivery directly to a consumer. Examples of eating & drinking food establishments are: 0-9 seating, 10+ seating, adult daycare, assisted living, hospital food service, jail food service, nursing home, school food service, senior food service, and service kitchen.

Class 2 – quick service operations with only limited preparation of menu items or as approved by the Department.

Class 3 – quick service operations with advanced preparation of two or less menu items as approved by the Department.

Class 4 – full service operations with advanced preparation of three or more menu items as approved by the Department.

Class 5 – quick or full service operations where the consumers specifically include populations highly susceptible to foodborne illness or as approved by the Department.

(27) "Event" means a public celebration such as but not limited to a fair, festival, circus, exhibition, carnival, food and/or drink tasting.

(28) "Food Bank" is a food establishment that operates in conjunction with an organization such as a charity that provides food, which has been acquired through purchases or donations, and offers the food directly to a consumer.

(29) "Foodborne Disease Outbreak" means the occurrence of two or more cases of a similar illness resulting from the ingestion of a common food, and the current definition provided by the U.S. Centers for Disease Control and Prevention.

(30) "Food Catering" is a food establishment where a pre-arranged number of meals and/or food products are prepared at one permitted premise for immediate service and consumption at another pre-arranged location.

(31) Food Establishment - as defined in the U.S. Food and Drug Administration 2013 Food Code

(a) "Food Establishment" includes:

(i) The following establishments defined in this Chapter such as: adventure food service; bakery; boarding home; bottled water & beverage plant; damaged food; competition food; daycare foodservice; eating and drinking; food bank; food catering; food jobber; food peddler; food production; ice manufacturing; temporary food establishment; meat establishment; mobile food unit; pushcart; refrigerated warehouse/locker; retail food establishment; seasonal food establishment; special event food establishment; vending machine, and commissary.

(ii) Demonstration cooking classes that advertise and/or demonstrate the preparation and/or cooking of food and then offer the food to the public for consumption at the conclusion of the demonstration. This also includes kitchenware establishments that demonstrate and offer samples to customers and food or beverage sampling offered to the consumer from an open bottle, cup or container.

(iii) As defined in the U.S. Food and Drug Administration 2013 Food Code.

(b) "Food Establishment" does not include:

(i) A home cooking school in which food and/or meals are served at a non-commercial social event, employee conducted function, or prepared at a home cooking school. No more than one meal per day shall be served to no more than fifteen students. The students shall be informed by a statement contained in a published advertisement, mailed brochure and placard posted at the cooking school's registration that the food is prepared in a kitchen that is not regulated and inspected by the Department or by a local health authority.

(ii) Demonstration culinary cooking schools and home economics classes accredited by the appropriate entity such as an educational institution and all food is prepared and consumed by the student in training. Food may not be purchased by the school or stored on premises.

(iii) A school or business that demonstrates the preparation of food but does not offer samples to the public for consumption.

(iv) A demonstration cooking class in which the public purchases, prepares and/or cooks and consumes their food.

(v) A "Chef for Hire" at a private residence for a private, non-advertised event where fees are paid by the responsible party for this service. Fees cannot be collected from the attendees of the event.

(vi) As defined in the U.S. Food and Drug Administration 2013 Food Code.

(32) "Food Jobber" means any wholesale food establishment in which food, not manufactured, on the premises, is offered for sale for ultimate human consumption.

(33) "Food Production" a food establishment that manufactures, packages, labels, or stores food for human consumption.
(a) Class 2 – operation with only limited preparation of food items.

(b) Class 4 – operation with advanced preparation of food items.

(34) "Food Readily Perishable" means any food or ingredient capable of supporting rapid and progressive growth of spoilage microorganisms.

(35) "Frozen Desserts" means ice cream, frozen custard, french ice cream, ice milk, quiescently frozen confection, quiescently frozen dairy confection, french custard ice cream, artificially sweetened ice cream, manufactured desserts mix, whipped cream confection, bisque tortoni sherbets, water ice and mellorine frozen desserts and all such other products, together with any mix, used in making such frozen desserts, and any other products which are similar in appearance, odor or taste to such products or are prepared or frozen as frozen desserts are customarily prepared and frozen, whether made with dairy products or non-dairy products.

(36) "Frozen Desserts Mix" means any pasteurized mix that is converted into frozen dessert.

(37) "Ice" means the product, in any form, obtained as a result of freezing water.

(38) "Ice Manufacturing Plant" means any food establishment, together with the necessary appurtenances, in which ice is manufactured or processed, and stored, packaged, distributed, or offered for sale for human consumption, or for use in which it may come into contact with food equipment or utensils, or with food or beverage intended for human consumption.

(39) "Insanitary" means unclean or unhealthy and the term shall apply to food in the process of production, preparation, manufacture, packing, storing, sale, distribution, or transportation, which is not adequately protected from insects, flies, rodents, dust, and dirt and by all reasonable means from all other foreign or injurious contamination; or to refuse, dirt, or waste products subject to decomposition and fermentation incident to the manufacture, preparation, packing, storing, selling, distribution, or transportation of food, which are not removed daily; or to machinery, equipment and utensils used in food processing, preparation, manufacture, packing, storing, sale, distribution, or transportation, which are not maintained in a clean condition; or to clothing of persons engaged in food handling which is unclean; or to any other condition determined by the Department to constitute a health hazard.

(40) "Inspection Upon Request" is an inspection requested by the owner in addition to the routine inspections used to determine fees for their permit to operate. The owner must apply and pre-pay a fee for these inspections.

(41) "License" means the permit document issued by the Department that authorizes a person to operate a food establishment.

(42) "License Holder" means the entity that:

(a) Is legally responsible for the operation of the food establishment such as the owner, the owner's agent, or other person; and

(b) Possesses a valid permit to operate a food establishment.

(43) “Limited Preparation” means food preparation limited to assemble-serve, cook-serve, chill-serve, and/or hold-serve or otherwise as determined by the Department.

(44) “Manufacturing” or "processing" means treating, compounding, blending, cooking, baking, packaging, pasteurizing, bottling, or any other method of preparing food for consumption.

(45) “Meat Establishment” means a store or shop at the retail level in which meat, meat products, fish, poultry, game animal, or molluscan shellfish are processed, prepared, stored, sold, or offered for sale. Preparation by means of cooking shall be limited to the production of meat, meat products, fish, poultry, game animal, and molluscan shellfish for consumption off the premises.

(46) "Micro Market" means an unattended retail food establishment where commercially prepackaged, time/temperature control for safety foods or ready-to-eat fruits and vegetables are offered for sale.

(47) “Mislabeled” or “Misbranded” means wrongly labeled or branded and the term shall apply to any food if it does not conform to the Federal Food and Drug Administration requirements for labeling located in 21CFR101.

(48) “Mobile Food Establishment” means a food establishment selling, offering for sale or dispensing food for human consumption from any vehicle or other temporary or itinerant station. For the purpose of this Environmental Health Code, mobile food establishments are defined as follows:

(a) “Mobile Food Unit” means and refers to an enclosed vehicle-mounted food establishment designated to be readily movable from which food is composed, compounded, processed, or prepared and from which food is vended, sold or given away.

(b) “Pushcart” means a vehicle designated to be readily movable that is limited to the serving of non-potentially hazardous foods, drinks, or individually commercially packaged potentially hazardous foods (time/temperature control for safety foods) maintained at proper temperatures, or limited to the assembling and serving of frankfurters and corn. Unpackaged non-potentially hazardous food items approved for sale or dispensed from a pushcart shall be limited to popcorn, nuts, pretzels and similar bakery products, cotton candy shaved ice, snow cones, Italian ice, and non-potentially hazardous drinks.

(c) “Food Peddler” means a retail food establishment in operation from a vehicle that is designated to be readily movable and is limited to the

service of commercially processed and packaged foods. Food peddlers may dispense non-potentially hazardous drinks (time/temperature control for safety foods) and assemble snow cones from approved and properly installed equipment.

(d) "Temporary Food Establishment" means an event as defined in this Section and as defined in the U.S. Food And Drug Administration 2013 Food Code**.**

(e) "Seasonal Food Establishment" means a food establishment that operates in conjunction with one event that operates for fifteen (15) to one hundred twenty (120) consecutive days within any permit year. At the termination of the event, the permit expires and the seasonal food establishment shall be removed from the premises or shall cease operation as determined by the Department.

(i) Class 1 – seasonally themed operations in major shopping malls approved by the Deparment.

(ii) Class 2 – seasonal operations such as spring training, state fair, etc. or as approved by the Department.

(f) "Special Event Food Establishment" means a food establishment that operates in conjunction with one event that operates for not more than one hundred twenty (120) consecutive days. At the termination of the special event, the special event food establishment shall be removed from the premises.

(49) "Pasteurization (Frozen Desserts)" means the process of heating every particle of mix to at least 155ºF. and holding at such temperature for at least 30 minutes, or to at least 175ºF. and holding at such temperature continuously for at least 25 seconds, in approved and properly operated equipment; provided, that nothing contained in this definition shall be construed to prevent the use of another process which has been demonstrated to be equally efficient and is approved by the Department.

(50) "Permit" means the document issued by the Department that authorizes a person to operate a food establishment.

(51) "Permit Category" means a category for which a particular food establishment would be classified as listed in the Maricopa County Environmental Health Code, Chapter I, Fee Schedule.

(52) Potentially Hazardous Food (time/temperature control for safety food) as defined in the U.S. Food And Drug Administration 2013 Food Code and includes sun tea that is not brewed.

(53) "Prepare" means to process commercially for human consumption by manufacturing, packaging, labeling, cooking, or assembling.

(54) "Product Contact Surface" means any surface, including but not limited to piping, machinery, equipment, containers, or utensils of any description, with which food comes into contact.

(55) "Public Health Control" means a method to prevent transmission of foodborne illness to the consumer.

(56) "Reconstituted" means dehydrated food products recombined with water or other liquids.

(57) "Refrigerated Warehouse" means any place, other than a restaurant, store, home, or eating establishment with refrigerated space exclusively for its own use, providing refrigeration and refrigerated storage service to the public with facilities to cool and keep food other than fresh unprocessed fruits and vegetables at a temperature at or below 41ºF. (5ºC.).

(58) "Regulatory Authority" means the Maricopa County Environmental Services Department.

(59) "Remodel" means to change the physical facilities or plumbing fixtures in a food establishment's food preparation, storage, or cleaning areas through construction, replacement, or relocation, but does not include the replacement of old equipment with new equipment of the same type.

(60) "Requester" means a person who requests an approval from the Department, but who is not an applicant or a permit holder.

(61) "Retail Food Establishment" means any retail establishment in the business of selling pre-packaged food, bulk non-potentially hazardous food and/or produce for human consumption.

(a) Class 2 – operation with more than 10 linear feet of sales/display space of foodstuffs or pre-packaged potentially hazardous foods.

(b) Class 3 – operation with more than 10 linear feet of sales/display space of foodstuffs or pre-packaged potentially hazardous foods, including preparation limited to washing, portioning, and/or packaging produce.

(62) "Sanitary" means clean, healthy and not deleterious to health and the term shall apply to food in the process of production, preparation, manufacture, packing, storing, sale, distribution, or transportation, which is adequately protected from flies and other insects, rodents, dust, and dirt and by all reasonable means from all other foreign or injurious contamination; and shall apply to the absence of refuse, dirt, or waste products subject to decomposition.

(63) "School Bakery" means a food establishment owned by a school district or similar entity that prepares exclusively bakery items for immediate service on-site, directly to a consumer, and/or for redistribution at another school or similar facility.

(64) "School Food Catering" a food establishment owned by a school district or similar entity where a pre-arranged amount of food is prepared at one permitted premise for immediate service and consumption at another pre-arranged or satellite location on a school campus/grounds or another location owned by the school district.

(65) "School Food Jobber" means a food establishment, which is a food storage facility, owned by a school district or similar entity where food, not manufactured on the premises, is stored for ultimate human consumption at a school or similar facility.

(66) "School Food Production" means a food establishment that is processing food and is owned by a school district or similar entity:

(a) Class 2 – operation with only limited preparation of food items.

(b) Class 4 – operation with advanced preparation of food items.

(67) "Service Animal" means any dog that is individually trained to do work or perform tasks for the benefit of an individual with a disability, including a physical, sensory, psychiatric, intellectual, or other mental disability. Other species of animals, whether wild or domestic, trained or untrained, are not service animals for the purposes of this definition.

(68) "Service Kitchen" means and refers to a food service establishment that operates in conjunction with a permitted food establishment and shall be operated and maintained in compliance with the appropriate provisions of this code.

(a) "Adult Care Service Kitchen" means and refers to a service kitchen that operates in conjunction with a permitted food establishment located onsite and shall be operated and maintained in compliance with the appropriate provisions of this code. These establishments serve highly susceptible

populations. Limited Preparation and reheating for immediate service for individual orders is permissible. Adult Care Service Kitchens may not serve a population of 16 or more.

(69) "Shared Facility" means any food establishment that shares food preparation, food storage and/or warewashing facilities with three (3) or more permitees under different ownership.

(a) The responsible party must obtain a commissary permit at the specified location before subsequent permits will be issued by the Department.

(b) If the commissary permit is vacated, all food establishments using the commissary as a base of operation will subsequently be vacated.

(70) "Table-Mounted Equipment" means equipment that is not portable and is designed to be mounted off the floor on a table, counter or shelf.

(71) "Tempered Water" means potable water ranging from 85ºF to 105ºF that comes from an approved source provided through a properly regulated mixing valve.

(72) "Trial Review Establishment" means a food establishment that is operating under a specialized Department review of alternative design items, equipment and Active Managerial Control Plans for a period not to exceed 6 months.

(73) "Uniform Mechanical Code" means the Uniform Mechanical Code published by the International Association of Plumbing and Mechanical Officials.

(74) "Vending Machine Operator" means anyone who as the owner or person in charge, furnishes, installs, services, operates, or maintains one or more vending machines.

(75) "Wholesome" means clean, free from spoilage and safe for human consumption.

REGULATION 2. Approval of Plans Required

a. No food establishment shall be constructed, nor shall any major alteration or addition be made thereto, until detailed plans and specifications for the premises have been submitted to and approved by the Department; nor shall any construction, alteration, or addition be made except in accordance with approved plans and specifications. The owner, operator or his authorized agent shall certify in writing that the plan documents comply with these regulations.

b. The approval shall expire at the end of one year unless the project contemplated in the approved plans is substantially under construction by that time.

c. Should it be necessary or desirable to make any material change in the approved plans and specifications, revised plans and specifications shall be submitted to the Department for review, and approval shall be obtained before the work affected by the change is undertaken. Structural changes or minor revisions not affecting health and sanitation will be permitted during construction without further approval.

REGULATION 3. Permit Required

a. No person shall operate a food establishment without a valid permit to operate from the Department unless:

(1) The person is operating the food establishment in compliance with Section 2, Regulation 7 of this Chapter; or,

(2) The food establishment is exempt from permitting based on the provisions in A.R.S. § 36-136(H)(4).

b. The permit to operate shall be posted in a conspicuous place on the premises of the food establishment.

REGULATION 4. Access to Premises

The owner or operator shall admit a representative of the Department at any reasonable time upon request, to any part of a food establishment for the purpose of inspection, and shall permit the copying of any or all records of food purchased or disposed of.

REGULATION 5. Embargoed Food

The Department, having reason to suspect that any food is unwholesome, spoiled or otherwise unsafe or unfit for human consumption, may forthwith label or seal such food as "withheld" or "embargoed." Such labeled or sealed food shall then be set apart from other foods by its owner and not used, sold or given away until the Department has had reasonable opportunity to cause a proper examination of the food to be made. After examination, the Department may remove the label or seal, or may direct the owner or person in charge of the food to denature, remove or destroy such food or to bring it into compliance with the requirements of this code, which he shall do.

REGULATION 6. Condemned Equipment

If after examination, the Department determines that a food utensil or food equipment is worn, defective, insanitary, or otherwise prejudicial to health, such utensil or equipment may be labeled “condemned” by the Department and the utensil or equipment so labeled may not thereafter be used for food storage, preparation, handling, or serving. The

Department may direct the owner to bring the condemned utensil or equipment into compliance with the requirements of this code, or to remove it from the food establishment, or replace it with approved units, which he shall do.

REGULATION 7. Removal of Seal

A "withheld", "embargoed" or "condemned" label, tag or seal, having once been affixed by the Department to food or equipment, shall be removed only by the Department except as otherwise provided by law.

REGULATION 8. General Sanitation

The following shall be complied with in all food establishments:

a. All parts, equipment and facilities of every food establishment, and all vehicles used in transporting food, shall be kept in a clean, healthful and sanitary condition, and in compliance with the pertinent provisions of this Environmental Health Code.

(1) Ice intended for human consumption or in direct contact with food shall be kept and handled as required for food and shall be dispensed by employees only using scoops, tongs or other ice dispensing utensils or through automatic ice-dispensing equipment. Dispensing utensils shall be stored on a clean surface or in the ice with the handle extended out of the ice. Between uses, ice transfer equipment shall be protected from contamination. Ice storage bins shall be drained across an air gap. Cooling tubes or coils conveying beverages through ice to dispenser heads are acceptable.

(2) Bulk food such as cooking oil, syrup, salt, sugar, or flour shall be stored in containers identifying the food by common name.

b. Oysters, clams or mussels shall not be stored, handled, processed, packed or repacked, held for sale, sold, or given away unless:

(1) They have been grown, harvested, processed and transported in accordance with requirements of the United States Public Health Service Shellfish Certification Program; and unless:

(2) All interstate shipments held are accompanied by the tag, label, or other approved mark showing that the shipper has been duly certified by the State, Province, or Country of origin, and the name and certificate number of the shipper is included on the current United States Public Health Service Shellfish Certification list.

c. Shellfish shall be so stored, handled, processed, packed, or repacked, held for sale, sold or given away that its true origin may be traced with facility. Specifically:

(1) All vendors or purveyors of shellfish at retail, including food establishments, shall sell or furnish shellfish in or from the original container as received and identified from the interstate source; or if furnished in any other way, shall retain for a period of 90 days after disposition of any consignment of shellfish the invoices or other documents which identify the source or origin of the shellfish.

(2) All shellfish vendors or purveyors not described in subparagraph (a) above shall hold shellfish in their original shipping containers marked as required, or if the distributor or wholesaler repacks or processes the shellfish, the containers or packages thereof shall be identified with the certificate number showing the origin of the shellfish and the wholesaler's or distributor's name and address.

d. Toilet Facilities

(1) Adequate and convenient toilet facilities, approved by the Department, shall be provided for employees. Employee restrooms not located inside the permitted establishment shall be under the control of either the permit holder or property management, and available during all hours employees are present in the establishment. All toilet rooms shall have self-closing doors, smooth and easily cleanable walls and ceilings, adequate ventilation to the outside air, and shall be posted with approved hand washing signs. Vestibules shall be provided when deemed necessary by the Department.

(2) Adequate and convenient toilet and lavatory facilities shall be provided as required by the local building code jurisdiction for all customer restrooms.

e. Lavatory Facilities

(1) Hand washing facilities shall be centrally located, visible and directly accessible, within 25 feet of all food preparation, food dispensing and warewashing areas. Barriers shall not physically and/or operationally obstruct the hand washing facility. Hand wash facilities shall be provided with hot and cold or tempered running water, soap and approved individual sanitary towels. When the hand washing facility is installed within 24 inches of a food preparation area, an approved splash guard shall be installed between the two locations. Lavatories, in addition to those provided in toilet rooms, shall be easily accessible to all employees. Mixing faucets are required in all new construction or when an existing lavatory is remodeled.

(2) Where fixtures are located more than sixty feet from the water heater, a recirculation pump must be installed, in order to ensure that water reaches the fixture at a temperature of at least 110° Fahrenheit or

(3) A separate, smaller water heater for remote fixtures.

f. Plumbing

(1) All plumbing shall be sound, tight, durable, and properly located, installed and maintained in good order and repair, and shall not constitute a source of contamination to food, equipment or utensils, or create an insanitary condition or nuisance. No plumbing fixture, pipe or device which provides, or which may provide a connection between a potable water supply and a drainage, soil, waste or other sewer pipe so as to make possible the backflow of sewage or wastewater into the water supply system shall be installed or permitted to remain installed. All plumbing shall be installed in accordance with this code and in accordance with Arizona Administrative Code, R4-48-102.

(2) Drain lines from equipment shall not discharge wastewater in such a manner as to permit the flooding of floors or the flowing of water across working or walking areas, or in difficult to clean areas or otherwise create an insanitary condition or nuisance.

(3) Water which has been used for cooling, or for any other purpose shall not be reused except as approved by the Department.

(4) Conformance with the following requirements or similar requirements shall be adhered to for the determination of Maricopa County Environmental Health Code compliance with plumbing and mechanical codes. The 2009 International Plumbing Code and 2009 International Mechanical Code, as adopted by the Maricopa County Board Of Supervisors on August 18, 2010 and as amended by Section 301 of Chapter 3 of the Maricopa County Planning & Development Department's Local Additions & Addenda dated October 2010, shall be adhered to for code compliance. This material is on file with the Maricopa County Planning & Development Department and is available at its web site at http://www.maricopa.gov/planning/resources/constructioncodes/default.aspx.

g. Utensils and Equipment

(1) Utensils and equipment, such as but not limited to vats, piping, counters, shelves, sinks, preparation tools, refrigerators, etc., shall be of approved materials and construction, easily cleanable and maintained in a sanitary condition. Equipment shall be certified or classified by an American National Standards Institute Accredited Certification Program, or deemed acceptable by the Department.

(a) A separate food preparation sink is required in facilities that have food preparation as determined by the Department.

h. No hermetically sealed, no acid and low acid food which has been processed in place other than a commercial food processing establishment shall be used.

i. Vehicles Transporting Food - All vehicles carrying food and food products shall be constructed, equipped and maintained as to protect the purity and wholesomeness of the transported products and shall conform to the applicable general regulations found in this code.

REGULATION 9. Reserved

REGULATION 10.

No person shall sell, offer for sale, or give away any food, which is unclean, unwholesome, contaminated, unfit, or otherwise dangerous or deleterious to health. The use of food from hermetically sealed containers which was not processed in an approved food processing establishment is prohibited.

REGULATION 11. Compliance

Representatives of the Department shall make such inspections of food establishments as necessary to assure compliance with these regulations. A copy of the report of the inspection shall be furnished to the owner, or operator, of the food establishment indicating the degree of compliance or noncompliance with the provisions of these regulations. Failure to correct any violation noted within the time limit specified shall be cause for denial, revocation or suspension of the permit to operate.

MARICOPA COUNTY ENVIRONMENTAL HEALTH CODE

CHAPTER VIII

FOOD, FOOD PRODUCTS, FOOD HANDLING ESTABLISHMENTS

SECTION 2

FOOD ESTABLISHMENTS

REGULATION 1. Food Establishments

a. Effective December 10, 2014, the U.S. Food and Drug Administration 2013 Food Code, and no future editions or amendments, is adopted and incorporated by reference, except as follows:

1. Section 3-304.15 is omitted;

2. Paragraph 3-201.11(B) is amended to read: food prepared in a private home may not be used or offered for human consumption in a food establishment unless the food is prepared in compliance with A.R.S. § 36-136(H)(4)(G).

3. Section 8-301.11 is amended to read: a person may not operate a food establishment without a valid permit to operate issued by the regulatory authority unless the person is operating the food establishment in compliance with Regulation 7 of this Section.

b. A food establishment that serves or vends food directly to the consumer that has been prepared in a private home in compliance with A.R.S. § 36-136(H)(4)(g) shall ensure that the final consumer of the product served or vended receives a copy of the required package label in accordance with A.R.S. § 36-136(H)(4)(g). This includes food prepared by the food establishment that incorporates products prepared in compliance with A.R.S. § 36-136(H)(4)(g).

c. Copies of the U.S. Food and Drug Administration 2013 Food Code incorporated by reference herein are available from the U.S. Food and Drug Administration.

d. For the purpose of this Section, references to "Regulatory Authority" in the U.S. Food and Drug Administration 2013 Food Code mean the Maricopa County Environmental Services Department.

REGULATION 2. PlansSubmitted

a. No food establishment shall be constructed and no major alteration or addition shall be made thereto until detailed plans and specifications for such construction, alteration or addition have been submitted to and approved by the Department. Any construction, alteration, or addition shall be made in accordance with plans and specifications approved by the Department. The owner, operator or his authorized agent shall certify in writing that the plan documents comply with these regulations.

b. The Department's approval shall expire at the end of one year, unless the construction, alteration or addition contemplated in the approved plans and specifications is substantially under construction by that time.

c. If the owner makes any material change to the approved plans and specifications, revised plans and specifications shall be submitted to the Department for review and approval before the work affected by the change begins. Structural changes and minor revisions not affecting health and sanitation are allowed during construction without further approval.

REGULATION 3. Reserved

REGULATION 4. Dog Friendly Patio

In addition to the U.S. Food and Drug Administration 2013 Food Code Rule 6.501.115, no dog shall be allowed on a food establishment premises unless the Department has issued a Dog Friendly Patio Permit to the food establishment. A Dog Friendly Patio Permit shall not be issued unless the food establishment complies with the following conditions and standards:

a. A separate entrance shall be provided from the exterior of the food establishment to the outdoor patio so that a dog will have direct access to the patio without entering the interior of the food establishment or any playground area of the food establishment. A dog on an outdoor patio shall not be allowed within seven feet of any entrance to the interior of the food establishment, except when necessary to enter or exit the patio.

b. A sign with at least half inch letters shall be posted at the front entrance of the food establishment so that it is easily visible to the public. The sign shall state: "Dog Friendly Patio - Dog access only through outdoor patio. For violations, contact Maricopa County Environmental Services Department (602) 506-6616."

c. No food may be prepared, including mixing drinks and serving ice, in the outdoor patio area, except that a beverage glass may be filled from a pitcher or other container that has been filled or otherwise prepared inside the food establishment.

d. The outdoor patio must be continuously maintained free of visible dog hair, dog dander and other dog-related waste and debris. The outdoor patio shall be hosed down or mopped with animal-friendly chemicals at the beginning of each shift during which food or beverages are served (breakfast, lunch, dinner, or late-hours).

If a food establishment has continuous food or beverage service without designated shifts, then the outdoor patio shall be hosed down or mopped with animal-friendly chemicals every six hours that the food establishment is open for business, except that such cleaning is not required if no dog has been present on the outdoor patio since the last cleaning. Waste created from a dog's bodily functions must be immediately cleaned up with animal-friendly chemicals.

All dog waste shall be placed in a fly-tight container located adjacent to the patio area and disposed of outside of the food establishment in an appropriately covered waste receptacle. Equipment used to clean the outdoor patio must be kept outside of the food establishment.

e. Employees shall not touch, pet or otherwise handle any dog while serving food or beverages or handling tableware.

f. All dogs shall be kept on a short leash and remain in the control of the customer at all times while in the outdoor patio area. All dogs shall wear a collar or harness and have a current license.

g. Dogs shall not be allowed on any seat, chair, a patron's lap, table, countertop, or similar surface in the outdoor patio area.

h. Dogs shall not be allowed to have any contact with reusable food service dishes or utensils. A dog may only have contact with disposable single service containers that provide food or water to the dog.

i. All patio surfaces shall be constructed of materials that are smooth, easily cleanable, and durable.

j. The food service establishment shall comply with all applicable local ordinances and rules.

REGULATION 5. Gloves, Use Limitation

If used, single-use gloves shall be used for only one task, such as working with ready-to-eat food or with raw animal food. Single-use gloves shall be used for no other purpose, and shall be discarded when damaged or soiled or when interruptions occur in the operation.

a. Slash-resistant gloves that are used to protect the hands during operations requiring cutting shall not be used in direct contact with food, unless that food is subsequently cooked as specified under Part 3-4 of the U.S. Food and Drug Administration 2013 Food Code, such as frozen food or a primal cut of meat.

b. Slash-resistant gloves may be used with ready-to-eat food that will not be subsequently cooked if the slash-resistant gloves have a smooth, durable and nonabsorbent outer surface, or if the slash-resistant gloves are covered with a smooth, durable, nonabsorbent glove or a single-use glove.

c. Cloth gloves may not be used in direct contact with food unless the food is subsequently cooked as specified under Part 3-4 of the U.S. Food and Drug Administration 2013 Food Code, such as frozen food or a primal cut of meat.

d. Latex gloves may not be used in direct contact with food.

REGULATION 6. Micro Markets

a. A Micro Market shall be located where access can be limited to employees and customers of the business.

b. The area of a Micro Market in which food is displayed shall be limited to a space of three hundred (300) square feet or less.

c. All Micro Market display units offering time/temperature controlled for safety food shall have an automatic control that prevents the equipment from opening:

1. If there is a power failure, mechanical failure, or other condition that results in an internal equipment temperature that cannot maintain food temperatures as specified under Chapter 3 of the U.S. Food and Drug Administration 2013 Code; and

2. If a condition specified under subparagraph c.1. of this regulation occurs, until the equipment is serviced and restocked with food that has been maintained at temperatures specified under Chapter 3 of the U.S. Food and Drug Administration 2013 Food Code.

d. When the automatic shutoff within a display described under paragraph c. of this regulation is activated, the ambient temperature may not exceed 41 degrees fahrenheit for more than thirty minutes immediately after the display is filled, serviced, or restocked.

e. Labeling requirements for prepackaged food items shall be met as required by the U.S. Food and Drug Administration 2013 Food Code.

f. Refrigerated, ready-to-eat, time/temperature controlled for safety food, displayed at a Micro Market, shall be discarded if the automatic shutoff control is activated as specified in c.1. of this regulation.

g. All Micro Market display units offering time/temperature controlled for safety food shall be equipped with a self-closing door, an automatic shut-off device, and shall comply with all applicable regulations of this code as determined by the Department.

h. The permit applicant shall submit for review and approval a complete set of plans and specifications documenting the equipment is certified or classified for sanitation by an American National Standards Institute (ANSI)-accredited certification program.

REGULATION 7. New Owner Transition

The Department may grant the new owner of a food establishment approval to operate without a permit so long as the following requirements are met:

a. The new owner shall apply and receive written approval from the Department prior to operating.

b. The time between the ownership change and issuance of the required permit to operate shall not exceed 30 days.

c. The previous owner of the food establishment shall have a valid permit at the time of the ownership change.

d. The new owner shall agree to immediately cease operations if any of the following occur:

1. An imminent health hazard such as fire, flood, electrical or water outage, sewage backup, misuse of poisonous or toxic materials, onset of an apparent foodborne illness outbreak, gross insanitary occurrence or condition, or other circumstance that may endanger public health.

2. Evidence of live insect and/or vermin activity.

3. Missing or inoperable plumbing fixtures essential to facility operations, such as hand sinks and warewashing equipment.

4. Inadequate supply of hot and cold water.

5. Insufficient, inadequate, or unapproved food temperature control equipment.

e. The new owner shall not conduct any food process where a variance or

HACCP plan is required in accordance with the U.S. Food and Drug Administration 2013 Food Code §§ 3-502.11, 3-502.12, 8-201.13, 8-201.14 and Subpart 8-103 which has not been issued and/or approved by the Department.

f. The new owner shall abide by the responsibilities of a permit holder as referenced in the U.S. Food and Drug Administration 2013 Food Code § 8-304.11.

MARICOPA COUNTY ENVIRONMENTAL HEALTH CODE

CHAPTER VIII

FOOD, FOOD PRODUCTS, FOOD HANDLING ESTABLISHMENTS

SECTION 3

MOBILE FOOD ESTABLISHMENTS

REGULATION 1. Definitions

a. "Mobile Food Establishment" means a food establishment offering for sale or dispensing food for human consumption from any vehicle or other temporary or itinerant station.

For the purpose of this Environmental Health Code, mobile food establishments are defined as follows:

(1) "Mobile Food Unit" means and refers to an enclosed vehicle-mounted food establishment designated to be readily movable from which food is composed, compounded, processed**,** or prepared and from which the food is vended, sold or given away.

(2) "Pushcart" means a vehicle designated to be readily movable that is limited to the serving of non-potentially hazardous foods, drinks, or individually commercially packaged potentially hazardous foods (time/temperature control for safety foods) maintained at proper temperatures, or limited to the assembling and serving of frankfurters. Unpackaged non-potentially hazardous food items approved for sale or dispensed from a pushcart shall be limited to popcorn, nuts, pretzels**,** and similar bakery products, shaved ice, snow cones, Italian ice, and non-potentially hazardous drinks.

(3) "Food Peddler" means a retail food establishment in operation from a vehicle that is designated to be readily movable and is limited to the service of commercially processed and packaged foods. Food peddlers may dispense non-potentially hazardous drinks (time/temperature control for safety foods) and assemble snow cones from approved and properly installed equipment.

(4) "Temporary Food Establishment" means an event as defined in Section 1 of this Chapter and as defined in the U.S Food and Drug Administration 2013 Food Code.

(5) "Seasonal Food Establishment" means a food establishment that operates in conjunction with one event that operates for fifteen (15) to one hundred

twenty (120) consecutive days within any permit year. At the termination of the event, the seasonal food establishment shall be removed from the premises or shall cease operation as determined by the Department.

(i) Class 1 – seasonally themed operations in major shopping malls as approved by the Department.

(ii) Class 2 – seasonal operations such as spring training, state fair, etc. or as approved by the Department

(1) "Special Event Food Establishment" means a food establishment that operates in conjunction with one event that operates for not more than fourteen (14) consecutive days. At the termination of the special event, the special event food establishment shall be removed from the premises.

b. "Competition Food Event" means any event that operates for not more than fourteen (14) consecutive days in which the competitors are vying with one another for profit prize, or position based on one similar type of food prepared by each competitor. Complimentary samples not to exceed 2 ounces may be given to the general public.

REGULATION 2. Compliance

a. Every mobile food establishment shall be operated and maintained in a clean and sanitary condition in compliance with the appropriate parts of this section and with the specific provisions in Chapter VIII, Sections 1 and 2. The Department may impose additional requirements to protect against health hazards related to the conduct of the mobile food establishments , may prohibit the sale or distribution of some or all potentially hazardous foods (time/temperature control for safety foods), and when no health hazard will result, may waive or modify requirements of this section.

b. Mobile food unit, pushcart and food peddler permit holders that desire to perform operations not allowed under their permit, while operating in conjunction with an event, shall obtain a temporary food establishment, seasonal food establishment, or special event food establishment permit. Unlike mobile food units and pushcarts, which are offered only as a one (1) year permit, peddler permits are issued for either six (6) months or one (1) year. The six (6) month peddler permit is half of the one (1) year peddler permit fee listed in the Chapter I Fee Schedule of this code.

c. At the termination of the event, all temporary food establishment and seasonal food establishment permits shall expire.

d. Thirty days prior to the start of an event, the property owner of the event location or his/her designee is required to complete the Department registration process.

e. The property owner of the event location shall only allow all food service establishments to operate after having obtained all Department required permits.

f. Promotional activities that do not require a food service permit include:

(1) Promotional activities in a permitted food establishment as defined in this code.

(2) The promotion of non-potentially hazardous food products as defined in this code.

(3) The cutting of raw fruits and vegetables for display and not intended for human consumption.

REGULATION 3. **Permit Required**

No person shall operate a mobile food establishment without a valid permit issued by this Department. The permit shall be maintained at the operating location. A separate permit is required for each establishment. Permits are nontransferable from person-to-person, place-to-place or vehicle-to-vehicle.

REGULATION 4. **Approval of Plans Required**

No mobile food establishment shall be constructed, nor shall any major alteration or addition be made thereto, unless detailed plans and specifications for the establishment have been provided to and approved by the Department**,** nor shall any construction, alteration or addition be made except in accordance with approved plans.

REGULATION 5. General Requirements

a. For all mobile food units, pushcarts and food peddlers, the name of the establishment shall be plainly indicated on sides and rear of the exterior of the vehicle in letters of contrasting colors at least three inches high with a minimum of 3/8 inch wide. When more than one permit is issued with the same business name to the same permittee, the vehicle number shall also be plainly indicated with the business name.

b. Compressors, auxiliary engines, generators, and similar mechanical units that are not an integral part of the food preparation or storage equipment shall be installed completely separate from the food preparation and storage areas and accessible from the exterior for all mobile food establishments.

c. Only utensils and equipment necessary for the operation and maintenance of a mobile food establishment may be kept on the vehicle or booth enclosure.

d. Adequate and durable waste containers of easily cleanable construction with self-closing covers shall be furnished for the use of consumers and the operator for of all mobile food establishments.

e. Mobile food establishments shall operate from an approved commissary or other food service establishment as required by this Department, and shall report at least daily to such location for supplies, food storage, vehicle and equipment cleaning, waste disposal**,** and service operations.

f. Mobile food establishments shall provide a commissary agreement to the Department upon request, at permit issuance or renewal, and as a part of the documents submitted during plan review for a new permit. Ice cream trucks that only sell or dispense individually packaged, commercially processed items are exempt from providing a commissary agreement.

g. Mobile food establishments shall provide information about daily operations to the Department. Information such as location, address and business name, time in and time out of each stop shall be provided in a format prescribed by the Department. This information shall only be made available pursuant to the Public Records Act, A.R.S. § 39-121 et seq. and Maricopa County policy.

h. Mobile food establishments serving potentially hazardous foods (time/temperature control for safety foods) shall maintain a log of visits to the approved commissary or food service establishment as required by this Department. This log shall be maintained using a Department approved format and maintained with the establishment at all times.

i. Sanitary toilet facilities for use by employees shall be readily available within 200 feet of all mobile food establishments that are operated at the same site for more than a one-hour period.

j. Temporary toilet facilities shall not be located within 25 feet of any mobile food establishment.

k. Mobile food establishments selling or dispensing open food or beverages shall not operate without hot and cold potable water, hand washing soap, sanitary towels, and an approved sanitizer that are available for immediate use at all times.

l. Pushcarts shall be limited to one additional ice chest for food products and one additional sales table for approved, pre-packaged foods and/or condiments.

m. The area within which a mobile food establishment is operating shall be kept clean and free from litter, garbage, rubble**,** and debris at all times.

n. A mobile food establishment shall not be constructed within 100 feet of any petting, riding or holding area for animals unless dust and runoff are controlled.

REGULATION 6. Interior Fixtures of Mobile Food Units and Pushcarts

a. Food service openings for mobile food units shall be:

(1) Limited to 216 square inches (such as 12 inches x 18 inches) each and equipped with a screen (16 mesh per square inch minimum) or solid door which shall be kept closed when not in use.

(2) Multiple service openings shall be at least 18 inches apart.

b. The cab or driving portion of the vehicle for a mobile food unit shall be separated from the food preparation and serving area of the vehicle by a permanent solid wall partition.

c. Doors to the food preparation and serving area shall be effectively self-closing and kept closed for mobile food units.

d. A three-compartment sink equipped with an integral metal drain board shall be permanently installed in all mobile food units. Each compartment shall be at least 12 inches wide, 12 inches long and 10 inches deep or 10 inches wide, 14 inches long and 10 inches deep and each drain board shall be at least 144 square inches. A metal shelf may be used in lieu of one drain board when approved by the Department

e. A handwashing lavatory at least 9 inches wide, 9 inches long and 5 inches deep shall be permanently installed on all mobile food units and pushcarts.

f. Interior walls and ceilings of a mobile food unit shall be light in color.

REGULATION 7. Food Protection

a. Time only as a public health control, as explained in Chapter VIII, Section 2, shall not be used for mobile food establishments.

b. Food preparation in mobile food establishments shall be simplified to reduce excessive steps where food may become contaminated. Only minimum food preparations shall be approved. This prohibition does not apply to foods that have been prepared or packaged in facilities meeting the requirements of this code.

c. When a mobile food establishment is in transit, all closures shall be in place and all food appropriately protected.

d. With the exception of instant tea, all tea must be brewed with boiling water in all mobile food establishments.

e. The Department shall approve, in writing, the procedures used by any mobile food establishment for providing samples of food to the consumer.

f. Outdoor cooking, processing, composing, compounding, preparing, grilling, storage, or service of any food or beverage is prohibited from mobile food units.

g. All food held for consumer self-service shall be wrapped or effectively dispensed to protect from contamination.

h. All packaged foods shall be labeled in accordance with 21 CFR 101.

i. All potentially hazardous foods (time/temperature control for safety foods) prepared at or sold from a mobile food establishment shall be prepared on the same day of sale or service. Potentially hazardous food (time/temperature control for safety foods) shall not be held over from a previous day's operation unless otherwise approved by the Department.

j Mobile food establishments shall not prepare or offer for sale any type of potentially hazardous food (time/temperature control for safety foods) that is raw or raw-marinated without proper consumer notification as identified in Chapter VIII, Section 2.

k. Ice that is consumed or that contacts food shall be manufactured inside an approved permitted food service establishment using potable water. Ice machines certified by the national automatic merchandising association may be located outside if approved by the Department.

l. Ice that is consumed or that contacts food shall only come into contact with clean single service containers or multiuse equipment that has been cleaned and sanitized as defined in Section 2 of this Chapter.

m. Potentially hazardous food items sold as condiments from a pushcart are required to be stored on the pushcart at proper temperatures. The amount of potentially hazardous food condiments are limited to sufficient storage space on the pushcart.

n. The service of all food items, excluding prepackaged non-potentially hazardous food items, must be conducted from the pushcart unit.

o. Bacon wrapped hotdogs must be commercially precooked or cooked at the assigned commissary prior to sales from a pushcart.

REGULATION 8. Water and Wastewater

a. A potable water system under pressure, supplying hot and cold water, of a minimum capacity of 30 gallons, shall be installed permanently in mobile food units for food preparation, utensil washing and sanitization and handwashing.

b. Pushcarts shall have a permanently installed potable water storage tank with a minimum capacity of 5 gallons for the purpose of hand washing only.

c. Mobile food establishments shall provide a minimum flow rate of hot and cold water to each sink basin of one-half (1/2) gallon per minute.

d. The fixtures or connectors for the inlet on a potable water storage tank for all mobile food establishments shall not be the same size or type as fixtures or connectors used to drain wastewater tanks. Potable water system inlets shall be protected against use for any other

service and from potential contamination from any source. In addition, potable water inlet shall be no larger than ¾" unless otherwise approved by the Department.

e. A liquid waste storage tank with a capacity at least 15% larger than the potable water storage tank is required for all mobile food establishments serving any open food or drink.

f. All connections on the vehicle for servicing mobile food establishments waste disposal facilities shall be of different size or type than those used for supplying potable water to these vehicles. The waste connection shall be located lower than the water inlet connection to preclude contamination of the potable water system. In addition, wastewater outlet shall be greater than 1" unless otherwise approved by the Department.

g. Alternative water supplies indicated in Chapter VIII, Section 2 shall not be used by mobile food establishments.

h. Mobile food units and pushcarts shall not connect to water or waste water systems except during servicing operations at a commissary or as approved by the Department.

i. All exterior water system connections for vehicles used on mobile food establishments shall be provided with an approved backflow prevention device.

j. All water tanks, pumps and hoses shall be flushed and sanitized before being placed in service after construction, repair, modification, and periods of nonuse longer than 7 days. Potable water tanks shall be flushed and sanitized monthly.

k. Wastewater holding tanks shall be emptied into an approved sewage disposal system.

l Mobile food establishments shall provide an approved food grade potable water hose. This hose is to be used only to fill the fresh water tank.

m. A self contained hand wash station shall include a minimum 5 gallon potable water tank, a minimum 9x9x5" hand washing sink, a minimum flow rate of hot and cold water to the sink basin of one-half (1/2) gallon per minute, and 15% greater capacity waste tank.

n. Grease shall be disposed in an approved manner.

REGULATION 9. Additional Requirements for Food Peddlers

a. Food peddlers that are operating away from their vehicles shall provide a permanent sign indicating their business name in letters at least 6 inches high and 1 inch wide. The sign shall be visible to the consumer and shall be in addition to the signs used on the vehicle.

b. All food shall be stored and displayed at least 24 inches above the ground surface.

c. All packaged frozen foods shall be maintained frozen and sold or offered for sale to consumers frozen.

d. Cutting of produce, melons, vegetables, or fruits is prohibited except to show that an item is seedless, ripe, of appropriate color, or other characteristic. Cut produce, vegetables, fruits, or melons shall not be offered as a sample for tasting to consumers and shall not be sold. Cutting as a method of portioning is prohibited.

e. A food peddler may assemble snow cones from properly installed equipment, and use approved utensils to sell or dispense pickles from jars. Open beverages served by a food peddler must be prepared at the commissary and dispensed from approved equipment. In addition, when open food products are dispensed, approved hand washing facilities shall be available.

f. Vehicles for use as a food peddler shall meet the appropriate regulations in this code if selling, dispensing or sampling any open food or beverage item. When only packaged food in sealed containers is transported by a food peddler, the carpeting in a vehicle need not be removed, but shall be covered by a smooth, durable, easily cleanable and non absorbent surface. The Department may approve exceptions for vehicles if a food peddler is operating as part of a permitted fixed food establishment and utilizes commercial equipment approved by the Department.

g. Food peddlers shall sell properly labeled food that is obtained from approved sources only. Sale of food from other mobile food establishments or prepared at home is prohibited.

h. Food peddlers that are operating away from the vehicle shall maintain the original permit card at the stand or booth.

i. Food peddlers that are operating away from the vehicle shall maintain an approved hand washing station at the stand or booth, if selling or dispensing any open food or beverage items.

j. Food peddlers that are operating away from the vehicle shall maintain the permitted food peddler vehicle on the premises.

REGULATION 10. Additional Requirements for Commissary Permits

a. Commissary must provide facilities for the storage of food, food containers or food supplies. When food preparation is conducted, the commissary must provide equipment for the cleaning and sanitizing of food service equipment, utensils and dishware.

b. Commissary must provide an outdoor servicing area.

c. The outdoor servicing area shall include facilities for the sanitary disposal of liquid waste; handling and disposal of garbage, grease, and rubbish originating from the mobile

food establishment; an adequate area for washing and storage of the mobile food establishment; facilities for filling the potable water holding tank; and electrical outlets.

REGULATION 11. Additional Requirements for Temporary Food Establishments, Seasonal Food Establishments and Special Event Food Establishments

a. All seasonal food establishments and special event food establishments operating at an event greater than 14 days shall operate in conjunction with an onsite commissary or a fixed food establishment, unless an alternate Department approval is obtained. Seasonal food establishments and special event food establishments, for which an alternative Department approval has not been granted, shall operate in conjunction with a commissary or fixed food establishment that is easily accessible and available for use at all times while in operation.

b. Only limited food preparation, cooking and reheating of prepared foods are allowed at the event, all other food preparation shall be accomplished at an approved commissary or fixed food establishment, unless an alternate Department approval is obtained.

c. Enough potable water shall be available in the establishment for food preparation, cleaning and sanitizing utensils and equipment and for handwashing. A heating facility capable of producing enough hot water for these purposes shall be provided on the premises.

d. Floors shall be constructed of a concrete, machine-laid asphalt, dirt or gravel if it is covered with mats, removable platforms, duckboards, or other suitable approved materials that are effectively treated to control dust and mud.

e. The booth construction shall be a ceiling and three walls (two sides and rear). Walls and ceilings shall be made of wood, canvass or other material that protects the interior of the establishment from the weather and that prevents the entrance of insects. Screening material may be used for wall construction and shall be at least 16 mesh to the inch. When screening material is used, additional wall covering must be maintained on-site in case of inclement weather.

f. Approved ware washing facilities shall be provided for all operations where multi-use utensils are required.

g. A convenient, easily accessible, and approved hand washing facility shall be located within 25 feet of all food service areas and available for employee hand washing. Special event food establishments must provide a self-contained hand wash station as defined in this section of the code.

REGULATION 12. Additional Requirements for Sampling Food Products

a. Cutting produce, melons, vegetables, or fruits is prohibited except to show that an item is seedless, ripe, or appropriate color or other characteristic. Cut produce, vegetables, fruits, or melons shall not be offered as a sample for tasting to consumers and shall not be sold.

b. Food sampling is limited to non-potentially hazardous foods and those potentially hazardous foods (time/temperature control for safety foods) that require limited preparation.

c. Only limited quantities of sampled product may be ready for sampling at any given time. All food products that have not been sampled at the end of the business day must be discarded.

d. No public self-service sampling is allowed. Each sample shall be prepared by the operator and handed to the customer, or the samples shall be placed in single service containers for consumption. A physical barrier, such as an approved sneeze guard, must be in place to prevent contamination of the food. Bulk dispensers are prohibited for sampling.

e. Only single service utensils and containers may be used for preparing samples. Single service items may not be reused.

f. Each person who provides samples shall provide a lined waste container for the disposal of used single service items and other waste products that is easily accessible from their location.

g. Hand washing facilities must be setup at all times when any open food or beverage product is served or sampled.

MARICOPA COUNTY ENVIRONMENTAL HEALTH CODE

CHAPTER VIII

FOOD, FOOD PRODUCTS, FOOD HANDLING ESTABLISHMENTS

SECTION 4

VENDING MACHINES

In addition to complying with the regulations in section 1 and 2 of this Chapter, vending machine operations shall comply with the following **r**egulations.

REGULATION 1. Permit, Plan Review and Commissary Required

a. No person shall operate a potentially hazardous food (time/temperature control for safety food) or water vending machine without holding a valid permit to do so from the Department.

b. The applicant for a permit shall provide a letter of certification from NAMA (National Automatic Merchandizing Association), or submit for review and approval a complete set of plans and specifications documenting the equipment is NSF/ANSI approved, which show compliance with the regulations in this Environmental Health Code for each type of vending machine proposed to be used. No potentially hazardous food (time/temperature control for safety food) or water vending machine shall be placed into service without review and approval from the Department, except as provided in Subparagraph (c), below**.**

c. The following are exempt from the requirement to obtain a permit to operate vending machines but shall comply with all pertinent regulations in this code:

   (1) Vending machines operated and maintained as a part of, and on the premises of, and under the control of the holder of an eating and drinking food establishment permit;

   (2) Vending machines that dispense only non-potentially hazardous foods; and

   (3) Dry type beverage vending machines dispensing bottled or metal can single-service containers.

d. Every permit holder of a vending permit shall designate and use an approved commissary for all food storage. Permit holders that operate their own commissary shall obtain the appropriate permit for that food establishment. Water vending machines do not require a commissary.

REGUALTION 2. Permit Display and Necessary Information

a. A permanent sign, visible to consumers, showing the permit number assigned by the Department to the permit holder, the permit holder's business name, a unique identifier assigned to the machine by the permit holder, and a telephone number consumers may use to contact the permit holder, of an approved size and style, shall be permanently and conspicuously affixed to each vending machine used by the permit holder.

b. The permit holder shall maintain a current list of machines by location, if applicable, of all potentially hazardous food (time/temperature control for safety food) and water vending machines under permit. The lists shall provide the unique identifiers and locations for all machines, frequency of service, type of machine (hot, cold, frozen, water, bulk), and the permitted commissary or other establishments from which machines are serviced. This information shall be provided to the Department upon request.

c. The permit holder shall notify the Department whenever adding new types of vending machines, or conversion of existing machines to dispense potentially hazardous foods (time/temperature control for safety food) other than those for which the permit was issued. Plan review, as stated in Regulation 2., may be required.

REGULATION 3. Sanitation, Packaging, and Dispensing

a. All foods, beverages and ingredients offered for sale through vending machines, shall be wholesome, free from spoilage, contamination, misbranding, and adulteration; shall be stored or packaged in clean protective containers; and shall be handled, transported and dispensed in a sanitary manner. Fruit shall be washed at a permitted commissary to remove soil and pesticides insecticides, or other chemicals, and allowed to air dry.

b. Condiments provided in conjunction with food dispensed by a vending machine shall be packaged in individual portions or shall be dispensed from approved sanitary dispensers.

c. Potentially hazardous foods (time/temperature control for safety food) offered for sale through vending machines shall be dispensed to the consumer in the individual original container or wrapper in which it was placed or such products shall be dispensed into single-service containers. Where potentially hazardous foods (time/temperature control for safety food) are dispensed, bulk supplies of such foods, beverages or ingredients shall be transferred only to a bulk vending machine in which all food contact surfaces have been cleaned and subjected to an effective sanitization process.

d. Vending machines that hold and vend refrigerated individually pre-wrapped potentially hazardous food (time/temperature control for safety food) shall bear a "sell by" date positioned on the top or front of the food container.

e. "Sell by" dates shall be legible and plainly presented (month, date, and year) to the consumer. No food may be re-wrapped or re-dated once placed for sale in a vending machine.

REGULATION 4. Vending Machines, Automatic Shutoff

a. Refer to the U.S. Food and Drug Administration 2013 Food Code, § 4-204.111, adopted by reference.

REGULATION 5. Sampling

Samples of food, beverage, water, or ingredient thereof shall be taken and examined by or as required by the Department as often as necessary to determine its wholesomeness and freedom from adulteration or misbranding.

REGULATION 6. Cleaning of Equipment

a. All multi-use food contact surface parts of vending machines**,** which come into direct contact with any non-packaged food, beverage, or food ingredient shall be thoroughly cleaned and undergo a sanitization process at the permitted commissary at intervals prescribed by equipment manufacturers or as frequently as necessary to prevent food contamination, and shall be kept clean.

b. A record of such cleaning and sanitizing operations shall be maintained by the permit holder for each machine and shall be retained for 30 days.

c. Microwave ovens provided by the permit holder for consumer use at a vending machine location shall be cleaned each time the vending machines at that vending machine location are serviced.

REGULATION 7. Single-Service Containers

All single-service containers, used to receive food or beverage in bulk from vending machines shall be kept in sanitary cartons or packages which protect the containers from contamination, stored in a clean dry place until used and handled in a sanitary manner. Containers shall be stored in the original carton or package in which they were placed at the point of manufacture until introduced into the container magazine or dispenser of the vending machine. Single-service containers stored within the vending machine shall be protected from manual contact, dust, insects, rodents, and other contamination.

REGULATION 8. Protection and Ease of Cleaning

a. Each vending machine location shall be kept clean.

b. Unless a vending machine is sealed to the floor so as to prevent seepage underneath, or can be manually moved with ease one or more of the following provisions shall be utilized to facilitate cleaning operations:

(1) The machine shall be mounted on legs six or more inches in height above the floor, or four inches above a counter top; or

(2) The machine shall be mounted on casters or rollers; or

(3) The machine shall be mounted on gliders, which permit it to be moved easily.

c. The floor area upon which vending machines are located shall be smooth, of cleanable construction and capable of withstanding repeated cleaning.

d. Adequate hand washing facilities, including hot and cold or tempered running water, soap, single-use gloves, and individual sanitary towels, shall be conveniently located for use by food employees servicing or loading bulk food machines.

REGULATION 9. Sturdy Construction and Design

a. Refer to the U.S. Food and Drug Administration 2013 Food Code, § 4-204.123, adopted by reference.

REGULATION 10. Condensing Units

a. Refer to the U.S. Food and Drug Administration 2013 Food Code, § 4-204.18, adopted by reference.

REGULATION 11. Service Connections

a. Refer to the U.S. Food and Drug Administration 2013 Food Code, § 4-204.123, adopted by reference.

REGULATION 12. Non-Food Contact Surfaces

Non-food contact surfaces of the interior of vending machines shall be designed and constructed to permit easy cleaning, and to facilitate maintenance operations.

REGULATION 13. Food Contact Surfaces

Food contact surfaces of vending machines shall be smooth, in good repair and free of breaks, corrosion, open seams, cracks**,** and chipped places. The design of such surfaces shall preclude routine contact between food and V-type threaded surfaces. All joints and welds in food contact surfaces shall be smooth; and all internal angles and corners of such surfaces shall be rounded to facilitate cleaning. All containers, valves, fittings, chutes, and faucets that are in contact with food or beverage shall be easily and readily removable and so fabricated as to be easily disassembled and when disassembled, all surfaces shall be visible for inspection and cleaning.

a. In machines of such design that food contact surfaces such as pipes or tubing are not readily removable, CIP (cleaning-in-place) of such pipes and pipe fittings may be permitted; provided,

(1) They are so arranged that a detergent solution, water rinse, and sanitizing solution can be circulated throughout the fixed system,

(2) Such solutions will contact all interior surfaces,

(3) The system is self-draining or otherwise completely rinsed and evacuated, and

(4) The procedures result in thorough cleaning and sanitization of the equipment.

REGULATION 14. Covers and Openings

The openings into all nonpressurized containers used for the storage of foods and ingredients, including water, shall be provided with covers, which prevent contamination from reaching the interior of containers. Such covers shall be designed to provide a flange, which overlaps the opening, and shall be sloped to provide drainage away from the cover surface. Concave covers or cover areas are prohibited. Any port opening through the cover shall be flanged upward at least 3/8" and shall be provided with a cover that overlaps the flange. Condensation or drip-deflecting aprons shall be provided on all piping, thermometers, equipment, rotary shafts and other functional parts extending into the container, unless a water-tight joint is provided. Such aprons shall be considered as satisfactory covers for those openings, which are in continuous use. Gaskets, if used, shall be of a material, which is nontoxic, stable and nonabsorbent, and shall have a smooth surface. All gasket retaining grooves shall be readily cleanable.

REGULATION 15. Dispensing Equipment, Protection of Equipment and Food.

a. Refer to the U.S. Food and Drug Administration 2013 Food Code, § 4-204.13, adopted by reference.

REGULATION 16. Food Storage Compartment

Every food storage compartment within vending machines dispensing packaged liquid foods shall be self-draining or shall be provided with a drain outlet, which permits complete draining of the compartment or diversion devices and retention pans. All such drains shall be easily cleanable.

REGULATION 17. Container Opening Devices

a. Refer to the U.S. Food and Drug Administration 2009 FDA Food Code, Regulation 4-204.19, adopted by reference.

REGULATION 18. Water Standards

a. Water used in or dispensed from vending machines shall be of a safe and sanitary quality, and from an approved source. Water used as a product ingredient shall be piped into the vending machine under pressure. Such machines shall be equipped with an approved pressure type backflow prevention device and all connections and fittings shall be installed in accordance with applicable plumbing regulations. Containers for the storage of water shall be designed and maintained as food contact surfaces.

b. External water fill ports or drawers of vending machines shall be designed so that covers and drawers are secured to the machine. Where unauthorized persons may have access to these ports or drawers, external fill port covers or drawers shall be equipped with locks or similar safeguards.

REGULATION 19. Water Filters

Water filters and other water conditioning devices shall be of a type, which may be disassembled for periodic cleaning and replacement. Replacement elements shall be handled in a sanitary manner.

REGULATION 20. Carbonated Water

a. If used, water filters or other water conditioning devices shall be of a type which may be disassembled for periodic cleaning or replacement of the active element. Replacement elements shall be handled in a sanitary manner.

b. To prevent leaching of toxic materials caused by possible interaction of carbonated water with piping and contact surfaces, post-mix soft drink vending machines, which are designed with an incoming water supply air gap shall have no copper tubing or other potentially toxic water system

tubing between the air gap and the downstream, carbonated water dispensing nozzle.

c. To prevent leaching of toxic materials caused by possible interaction of carbonated water with piping and contact surfaces, post-mix soft drink vending machines**,** which are directly connected to the external water supply system shall be equipped with a double (or two single) check valves and a vented valve or similar backflow preventer immediately upstream from the carbonator, with no copper tubing or other potentially toxic tubing or contact surfaces in or downstream from the check and vented valves.

d. In all vending machines in which carbon dioxide is used as a propellant, all food-contact surfaces from the check valves or other protective devices, including the valves or devices, shall be of such material as to preclude the production of toxic substances which might result from interaction with carbon dioxide or carbonated water.

REGULATION 21. Check Valves

Where check valves are used for the protection of the water supply, a screen of not less than 100 mesh to the inch shall be installed in the water supply line immediately upstream from the check valves in a location which permits for servicing or replacement.

REGULATION 22. **Storage and Removal of Waste**

a. Trash or other waste materials shall be removed from the vending machine location as frequently as necessary to prevent a public health nuisance and shall be disposed of in an approved manner.

b. Self-closing, leak-proof, readily cleanable, plainly labeled**,** and designated waste container or containers shall be provided in the vicinity of each machine or machines to receive used cups, cartons, wrappers, straws, closures, and other single-service items. Such waste containers shall not be located within the vending machine; provided, that an exception may be made for machines dispensing only packaged beverages with crown closures.

c. Suitable racks or cases shall be provided for multi-use containers or bottles.

REGULATION 23. Vending Machines, Liquid Waste Products.

a. Refer to the U.S. Food and Drug Administration 2009 FDA Food Code, Regulation 4-204.121, adopted by reference.

REGULATION 24. Protection While In Transit

Food, beverages, or ingredients while in transit to vending machine locations shall be protected from the elements, dirt, dust**,** and insects, rodents, and other contamination. Similar protection shall be provided for single-service containers and for food contact surfaces of equipment, containers and devices in transit to vending machine locations.

REGULATION 25. Temperature While Delivering

Potentially hazardous foods (time/temperature control for safety food**)** or beverages, while in transit to vending machine locations shall be maintained at a temperature of not more than 5°C. (41°F.) or at a temperature not less than 57°C. (135°F.), whichever is applicable.

REGULATION 26. Sanitary Standards for Food Employees

a. Refer to the U.S. Food and Drug Administration 2009 FDA Food Code, Regulation 3-301.12 and 3-301.11, adopted by reference.

REGULATION 27. Water Vending Machines

a. Water supplied to a vending machine shall be from an approved source. Water dispensed from water vending machines shall meet or exceed Federal and State Drinking Water Standards.

b. Samples shall be periodically taken from each water vending machine by the permit holder, but no less than once every 12 months, and provided to a laboratory certified by the State of Arizona for analysis to detect coliform bacteria. If laboratory results are unsatisfactory, machine shall be taken out of service, the Department shall be notified and the machine will not be put back into service until such time as satisfactory sampling results are provided to the Department. Records of the results of laboratory analysis of periodic samples and any subsequent samples necessary because of unsatisfactory results shall be maintained for two years by the permit holder and shall be made available to the Department upon request.

c. Physical requirements for approved machines:

   (1) The outlet nozzle shall be isolated in such a manner as to deny the consumer access to the nozzle.

   (2) Provisions shall be made to deactivate the machine and prevent further vending if any malfunction occurs within the machine or if resistance across the filters reaches a predetermined pressure beyond which the filter is no longer effective.

(3) A self-closing, tight-fitting door shall be installed on the vending compartment.

(4) A backflow preventing device shall be installed on the incoming water line. All connections and fittings shall be installed in accordance with applicable plumbing regulations and codes.

(5) Water vending machines equipped with ultraviolet sanitizing attachments shall be equipped with monitoring devices so designed as to shut down the operation of the machine when the ultraviolet unit fails to function.

d. False or misleading statements or claims on water vending machines are prohibited. Labeling shall include the statement, "This machine is connected to an approved public water supply which meets federal and state drinking water standards." Labeling shall also include a statement of any substances and/or preservatives added to the water and all major treatment processes applied thereto.

MARICOPA COUNTY ENVIRONMENTAL HEALTH CODE

CHAPTER VIII

FOOD, FOOD PRODUCTS, FOOD HANDLING ESTABLISHMENTS

SECTION 5

MEAT ESTABLISHMENTS

REGULATION 1. Definitions

"Meat Establishment" means a store or shop at the retail level in which meat, meat products, fish, poultry, game animal, or molluscan shellfish are processed, prepared, stored, sold**,** or offered for sale. Preparation by means of cooking shall be limited to the production of meat, meat products, fish, poultry, game animal, and molluscan shellfish for consumption off the premises.

REGULATION 2. Permits Required

No person shall operate a meat establishment without obtaining and holding a valid permit to do so from the Department.

REGULATION 3. General

a. All meat, meat products, fish, poultry, game animal, and molluscan shellfish shall be considered a food as defined in Chapter VIII, Section 1, Regulation 1.

b. Live slaughter of animals, fish and/or birds shall not be conducted without a variance from this Department.

c. Meat establishments shall comply with the regulations in Sections 1 and 2 of this Chapter.

d. All processing of raw meat, meat products, fish, poultry, game animal, or molluscan shellfish shall be spatially or temporally separated from areas where ready-to-eat food products and/or food service equipment are stored, prepared or held for service.

e. All meat, meat products fish, poultry, game animal, and molluscan shellfish shall be from a source approved by the appropriate jurisdiction**,** e.g., Arizona Department of Agriculture, Animal Service Divison. The Department reserves the right to disapprove meat or meat products from uninspected sources.

f. Meat, meat products, fish, poultry, game animal, or molluscan shellfish shall not be labeled or represented in a manner which is in conflict with the Arizona Department

Of Agriculture, Animal Service Division, meat and poultry inspection requirements or which would misrepresent the item to the consumer.

REGULATION 4. Refrigeration; Packaging; Transportation

a. The temperature of meat, meat products, fish, poultry, game animal, or molluscan shellfish requiring refrigeration shall not exceed 41°F. at any time. Frozen products shall be maintained at a temperature of not more than 0°F.

b. All refrigerators, walk-in boxes, showcases, freezers and vehicles must be equipped with properly located, easily readable thermometers which are accurate within (±2°F.) two degrees fahrenheit.

c. All trucks used for the delivery of meat, meat products, fish, poultry, game animal, or molluscan shellfish to a retail meat establishment shall be completely enclosed and shall be refrigerated so that the temperature of the products being transported shall not rise above 41°F. at any time. All meat, meat products, fish, poultry, wild game, or molluscan shellfish shall be transported in a manner that avoids exposure to dust, dirt, filth, or other deleterious substances. No meat or meat products, fish, poultry, game animal, or molluscan shellfish shall be laid directly on the floor of any truck.

REGULATION 5. Processed Meat and Meat Food Product Requirements for Meat Establishments

a. Miscellaneous raw beef products

(1) Chopped beef, ground beef. "Chopped Beef" or "Ground Beef" shall consist of chopped fresh and/or frozen beef with or without seasoning and without the addition of beef fat as such, shall not contain more than 30% fat, and shall not contain added water, binders, or extenders. When beef, cheek meat (trimmed beef cheeks) is used, in the preparation of chopped or ground beef, the amount of such cheek meat shall be limited to 25%, and if in excess of natural proportions its presence shall be declared on the label in the ingredient statement, and contiguous to the name of the product.

(2) Hamburger. "Hamburger" shall consist of chopped fresh and/or frozen beef with or without the addition of beef fat as such and/or seasoning, shall not contain more than 30% fat, and shall not contain added water, binders, or extenders. Beef cheek meat (trimmed beef cheeks) may be used in the preparation of hamburger only in accordance with the conditions prescribed in Paragraph (1) of this Section.

(3) (3) Beef patties. "Beef patties" shall consist of chopped fresh and/or frozen beef with or without the addition of beef fat as such and/or seasonings. Binders or extenders and/or partially defatted beef fatty tissue may be used without added water or with added water only in amounts such that the product's

characteristics are essentially that of a meat patty. These products must have an ingredient statement with all products used in order of predominance as in Paragraph f.

(4) Fabricated steak. Fabricated beef steaks, veal steaks, beef and veal steaks, or veal and beef steaks, and similar products, such as those labeled "Beef Steak, Chopped, Shaped, Frozen", "Minute Steak, Formed, Wafer Sliced, Frozen", "Veal Steaks, Beef Added, Chopped-Molded-Cubed-Frozen, Hydrolyzed Plant Protein, and Flavoring" shall be prepared by comminuting and forming the product from fresh and/or frozen meat, with or without added fat, of the species indicated on the label. Such products shall not contain more than 30% fat and shall not contain added water, binders or extenders. Beef cheek meat (trimmed beef cheeks) may be used in the preparation of fabricated beef steaks only in accordance with the conditions prescribed in Paragraph (1) of this section.

b. Fresh pork sausage. "Fresh pork sausage" is sausage prepared with fresh pork or frozen pork, or both, not including pork byproducts, and may be seasoned with condimental substances. It shall not be made with any lot of product which, in the aggregate, contains more than 50% trimmable fat, that is fat which can be removed by thorough, practicable trimming and sorting. To facilitate chopping or mixing, water or ice may be used in an amount not to exceed 3% of the total ingredients used.

c. Chorizo. Pork must be treated to destroy trichinae or use certified pork. If total added moisture is more than 3% the product must be labeled "Imitation".

d. Fresh beef sausage. "Fresh beef sausage" is sausage prepared with fresh beef or frozen beef, or both, not including beef byproducts, and may be seasoned with condimental substances. The finished products shall not contain more than 30% fat. To facilitate chopping or mixing, water or ice may be used in an amount not to exceed 3% of the total ingredients used.

e. Breakfast sausage. "Breakfast sausage" is sausage prepared with fresh and/or frozen meat, or meat and meat byproducts and may be seasoned with condimental substances. It shall not be made with any lot of products which, in the aggregate, contains more than 50% fat which can be removed by thorough practicable trimming and sorting. To facilitate chopping or mixing, water or ice may be used in an amount not to exceed 3% of the total ingredients used. Extenders or binders are limited to 3 1/2% of the finished sausage.

f. Pork products. All products with pork as an ingredient, except those customarily well cooked in the home, must be treated for the control of

trichinae. These products include all cooked and smoked sausage and pork products that may appear to be cooked. The treatment consists of heating to a minimum internal temperature of 137°F., or freezing as set forth in the following chart.

Temperatures °F.	Packages or pieces not over 6" in thickness Group 1 (days)	Not over 27" in thickness Group 2 (days)
5	20	30
--10	10	20
--20	6	12

g. Cooked sausage. Frankfurter, frank, furter, hotdog, wiener, vienna, bologna, garlic bologna, knockwurst, and similar products.

(1) Frankfurter, frank, furter, hotdog, wiener, vienna, bologna, garlic bologna, knockwurst, and similar cooked sausages are comminuted, semi-solid sausages prepared from one or more kinds of raw skeletal muscle meat or raw skeletal muscle and raw or cooked poultry meat, and seasoned and cured, using one or more curing agents. They may or may not be smoked. The finished products shall not contain more than 30% fat. Water or ice, or both, may be used to facilitate chopping or mixing, or to dissolve the curing ingredients, but the sausage shall not contain more than 10% of added water. These sausage products may contain uncooked, cured pork from primal parts, which do not contain any phosphates. Such products may contain raw or cooked poultry meat not in excess of 15% of the total ingredients, excluding water, in the sausage. Such poultry meat ingredients shall be designated in the ingredient statement on the label of such sausage.

(2) Frankfurter, frank, furter, hotdog, wiener, vienna, bologna, garlic bologna, knockwurst, and similar cooked sausage that are labeled with the phrase “with byproducts” or “with variety meats” in the product name are comminuted, semi-solid sausages consisting of not less than 15% of one or more kinds of raw skeletal muscle meat with raw meat byproducts, or not less than 15% of one or more kinds of raw skeletal muscle meat with raw meat byproducts and raw or cooked poultry products; and seasoned and cured. They may or may not be smoked. Partially defatted pork fatty tissue or partially defatted beef fatty tissue, or a combination of both, may be used in an amount not exceeding 15% of the meat and meat byproducts or meat, meat byproducts and poultry products ingredients. The finished products shall not contain more than 30 percent fat. Water or ice, or both, may be used to facilitate chopping or mixing or to dissolve the curing and seasoning ingredients, but the sausage shall contain no

more than 10 percent of added water. These sausage products may contain uncooked, cured pork, which does not contain any phosphates, or contain only approved phosphates. These sausage products may contain poultry products, individually or in combination, not in excess of 15% of the total ingredients, excluding water, in the sausage. Such poultry products shall not contain kidneys or sex glands. The amount of poultry skin present in the sausage must not exceed the natural proportion of skin present on the whole carcass of the kind of poultry used in the sausage. The poultry products used in the sausage shall be designated in the ingredient statement on the label of such sausage. Meat byproducts used in the sausage shall be designated individually in the ingredient statement on the label for such sausage.

(3) A cooked sausage as defined in Paragraph (1) of this section shall be labeled by its generic name, e.g., frankfurter, frank, furter, hotdog, wiener, vienna, bologna, garlic bologna, or knockwurst. Sausage products within Paragraph 1 that are prepared with meat from a single species of cattle, sheep, swine, or goats shall be labeled with the term designating the particular species in conjunction with the generic name, e.g., “beef frankfurter”.

(4) A cooked sausage as defined in Paragraph (2) of this section shall be labeled by its generic name, e.g., frankfurter, frank, furter, hotdog, wiener, vienna, bologna, garlic bologna, or knockwurst, in conjunction with the phrase “with byproducts” or "with variety meats" with such supplemental phrase shown in a prominent manner directly contiguous to the generic name and in the same color on an identical background.

(5) With appropriate labeling such as “Frankfurter, Calcium Reduced Dried Skim Milk Added”, or “Bologna, with Byproducts (or Variety Meats), Soy Flour Added”, one or more of the following binders may be used in cooked sausage otherwise complying with Paragraphs (1) and (2) of this section: Dried milk, calcium reduced dried skim milk, nonfat dry milk, cereal, vegetable starch, starchy vegetable flour, soy flour, soy protein concentrate, and isolated soy protein, provided such ingredients, individually or collectively, do not exceed 3 1/2% of the finished product, except that 2% of isolated soy protein shall be deemed to be the equivalent of 3 1/2% of any one or more of the other binders.

(6) Cooked sausages shall not be labeled with terms such as “All Meat” or “All (species)”, or otherwise to indicate they do not contain nonmeat ingredients or are prepared only from meat. Sodium nitrate,

sodium nitrite, potassium nitrate**,** and potassium nitrite may be added to the product provided that total nitrates and nitrites are not in excess of 200 parts per million. Bacon shall not contain nitrates and nitrites in excess of 120 parts per million. Seasoning substances or additives including common salt, wood smoke, vinegar, flavorings, spices**,** or approved sugars, such as sucrose, cane or beet sugar, maple sugar, dextrose, invert sugar, honey, corn syrup solids, corn syrup**,** and glucose syrup may be added.

h. Labeling

(1) All processed, blended or otherwise prepared meat, meat products, fish, poultry, game animal, or molluscan shellfish that are packed in any can, pot, tin, box, canvas**,** or other receptacle or covering constituting an immediate or true container, shall be labeled. Labels shall contain, prominently and informatively, the following:

(a) The true name of the product, identified with the manufacturer and place of manufacture.

(b) A list of the ingredients giving common or usual names of the ingredients, when there are two or more ingredients, and arranged in the order of their predominance. If ice or water is R 4-3-2002 8-82 used to facilitate chopping or mixing in the preparation of sausage, it must be appropriately declared on the label.

(c) Additionally, packaged food shall be labeled as specified by law in 21CFR101 - food labeling, and 9CFR317.

REGULATION 6. Sanitation

Every meat establishment shall comply with regulations in Sections 1 and 2 of this Chapter, and the Regulations in this Section.

MARICOPA COUNTY ENVIRONMENTAL HEALTH CODE

CHAPTER VIII

FOOD, FOOD PRODUCTS, FOOD HANDLING ESTABLISHMENTS

SECTION 6

FOOD RELATED FACILITIES

In addition to complying with the regulations in Section 1 and 2 of this Chapter, beverage plants, damaged and salvaged food establishments, bakeries, ice manufacturing plants, refrigerated warehouses**,** and food catering establishments shall comply with the following regulations.

REGULATION 1. Beverage Plants

a. Bottling, canning and packaging shall be performed using approved mechanical apparatus.

b. The product surface contact surface of containers shall be inert to the contents.

a. Chipped, cracked or otherwise defective containers shall not be used.

d. Crowning and closing shall be done by approved machinery. Hand crowning or closing is prohibited.

REGULATION 2. Salvage and Sale of Damaged Food

a. Damaged food shall be stored apart from other food and food products in a section or area of the premises clearly designated by sign as the "Damaged Foods Section."

b. Damaged food shall be labeled either on the food itself or on its container or package, to indicate the nature of the damage, such as "fire damaged", "radiation damaged", etc.

c. No person shall sell, offer for sale or give away damaged food that is unclean, unwholesome, contaminated, unfit or otherwise dangerous or deleterious to human health.

d. Any person in charge of a food establishment wherein food has been subjected to any of the deleterious influences described herein Chapter VIII, Section 1,

definition of damaged food, shall notify the Department thereof before marketing such food.

REGULATION 3. Bakeries

a. Refrigeration – All readily perishable bakery products, such as custard or cream filled pastries or pies, commonly known as cream pies shall be cooled to a temperature specified in Chapter VIII, Section 2, §3-501.16 within one (1) hour of completion and shall be kept at or below that temperature. Perishable ingredients shall be kept at a temperature specified in Chapter VIII, Section 2, §3-501.16 or less at all times.

b. Wrapping and Transportation – No bakery product shall be transported or delivered unless it is wrapped or packaged to prevent contamination. Packaging shall be done at the place of manufacture. An exception may be allowed where bakery products are transported from the place of manufacture to a retail branch store where the unwrapped products shall be displayed only in enclosed display cases. The unwrapped products may be packed for transportation in dust proof bulk containers. Bulk containers shall be of easily cleanable construction, and shall be kept clean at all times. The unwrapped contents thereof shall not be handled by drivers or any other person.

c. Vehicles – All vehicles used in transporting bakery products shall be of a closed type, dust and fly proof. All shelves used in such vehicles shall be readily removable and easily cleanable.

REGULATION 4. Ice Manufacturing Plants

a. Ice and all water used in ice manufacturing, including that used in preparing brine solutions, shall be of a safe, sanitary quality and from an approved public or private water supply system.

b. Only potable water shall be used in sprays and in filling dipping wells, for the removal of ice cakes from the ice cans or tanks.

c. A nonpotable water supply approved by the Department may be permitted within the establishment for purposes of fire protection and the cooling of refrigeration equipment.

d. Ice shall not come in direct contact with water in dipping wells.

e. If water is treated with chemicals or additives at the ice plant, the treatment and facilities shall be as approved by the Department.

f. Air used for water agitation shall be filtered or otherwise treated to render it free of dust, dirt, insects**,** and extraneous material. Air intakes shall be so located and maintained as to accomplish this. Filters shall be located upstream from the compressor and shall be easily removable for cleaning or replacement.

g. The blower or compressor for supplying air for water agitation shall be designed so it will deliver oil-free air.

a. Ice shall not be stored or kept in canvas containers unless provided with a sanitary single-service liner, which protects the ice from contamination.

b. Freezing tank covers shall be so designed and of such material as to protect the ice containers from splash, drip and other contamination. Such covers shall be equipped with lifting rings or similar devices.

c. No person shall enter the tank room or any room or area where ice contacts a walking surface, unless they wear clean suitable boots or shoe covering. Such boots or shoe covering shall be removed when the person leaves such room or area; provided, that if boots or shoe coverings are not removed, they shall be Thoroughly washed in an approved sanitizing solution before reentering such rooms or areas.

d. Ice for human consumption shall be transported in clean, enclosed vehicles. Vehicles hauling unpackaged ice shall be thoroughly washed immediately prior to loading with ice.

e. That part of core suction or filling equipment that penetrates the ice block shall be properly protected against contamination when not in use. Where a protective collar is used, it shall be large enough and so positioned as to prevent the tip of the suction or filling tube from touching the deck when it is laid down.

m. Ice used for human consumption shall not be cracked, chipped, crushed, packaged, or pulverized on delivery trucks, loading platforms or on the ground. This operation shall be performed in an enclosed protected area.

n. All cubed or crushed ice shall be transported and delivered in clean, closed, single-service bags, cartons or containers**,** which shall be stored in a clean dry place until use, and shall be handled in a sanitary manner. Single-service containers shall be used once only.

o. No toilet room or toilet vestibule shall open directly into ice making or ice storage areas.

p. Containers used to package ice for retail sale shall be labeled in accordance with 21CFR101.

q. Ice making machines and associated equipment shall be located so that the ice will not be exposed to any source of contamination while being produced, handled, packaged**,** or stored.

r. Ice that is available for self-service by the public shall be dispensed in single-service packages or through a device which will not permit exposure or access to ice held in storage.

REGULATION 5. Refrigerated Warehouses

a. No food shall be placed, received or kept in a refrigerated warehouse unless such food is in a pure and wholesome condition. Food or food products marked "withheld", "embargoed" or "condemned" shall be kept in a place and under conditions which have been approved by the Department.

b. The operator of a refrigerated warehouse shall, upon request from the Department, when it has reasonable suspicion regarding the wholesomeness of food, submit reports setting forth the quantity and condition of any food or food product stored therein.

c. Period of Storage - No person shall keep or permit to remain in any refrigerated warehouse any food beyond the time when it is sound, wholesome and fit to remain in storage. Food found to be fit for human consumption but unfit for further storage shall at once be removed from warehouse storage. No food shall be kept or permitted to remain in any refrigerated warehouse for a longer aggregate period than twenty-four (24) calendar months except by permission of the Department. Upon written application for an extension of time, the Department may approve such request if it determines that the food is sound, wholesome and fit for further storage. If any food is held longer than twenty-four (24) months without an approved extension and neither the operator nor the Department can locate the owner of said food, after a ten (10) day notice made by registered mail to the last known address of such owners by the operator of the facility, the Department may, at its discretion, order the disposition of the food.

d. Restorage Prohibited - No food that has once been released from storage in a refrigerated warehouse and placed on the market for sale to consumers or delivered for use by the ultimate consumer, shall again be placed or stored in a refrigerated warehouse for resale for human consumption.

e. Marks, Tags, Identification of Food - The operator of each refrigerated warehouse shall assign to each lot of food and drink, when received for storage, a distinguishing lot number for identification purposes and shall keep an accurate record of such lot number and shall also make and keep a record of the date of the receipt and the date of removal of each lot of food and drink. No food shall

be held unless plainly marked and tagged, either upon the container or upon the article itself, with the identification lot number assigned and recorded in accordance with this regulation, except that where food products are bulk-piled, palletized or piled in unit loads it will be satisfactory to have the outside of the bins in which the bulk is piled or the outside of containers marked as required.

f. Transfer - Food may be transferred from one refrigerated warehouse to another if all prior stamping, tags and marking remain thereon and such transfer is not made for the purpose of evading the provisions of this code.

g. Alteration Prohibited - No person shall alter, obliterate, mutilate, destroy, remove or eradicate any stamp, tag or mark placed upon any food package, container or food to indicate that the food was received for refrigerated storage from within or from out of the County in order to evade any of the provisions of this code.

REGULATION 6. Frozen Desserts

a. Finished products - after pasteurization, frozen desserts or frozen dessert mix shall not contain in excess of 20 coliform per gram and/or in excess of 50,000 plate count of bacteria per gram at any time.

b. Method of determination - bacteria and other counts referred to herein shall be based on recognized standard methods of analysis as prescribed in the latest edition of standard methods for the Examination of Dairy Products of the American Public Health Association, Inc.

c. The Department shall suspend the conversion of pasteurized mix into frozen dessert whenever the bacteria counts and/or coliform determinations exceed the quality standards for frozen desserts in three out of the last five samples taken on separate days.

REGULATION 7. Food Caterers

a. All catering activities that occur prior to service must occur at the approved, permitted food establishment.

b. Food service will generally be limited only to holding and serving as well as cooking of animal proteins, soy proteins and vegetables. Approval for limited on-site re-heating and food assembly may be granted by the Department following application review. All food preparation (breading, chopping, mixing, marinating, etc.) must be accomplished at the food service establishment.

c. Food products that have been cooked/prepared at the event are to be discarded at the end of each day.

d. All food products requiring temperature control shall be transported and stored in equipment whose intended use is for such activities.

e. All vehicles carrying food and food products shall be constructed, equipped and maintained as to protect the purity and wholesomeness of the transported products. Personal vehicles (passenger cars and station wagons, etc.) are prohibited for use with a food catering operation.

f. Accessible hand washing facilities shall be located and maintained open at all times. Where suitable facilities are not immediately accessible, a self-contained hand washing station, as defined in Section 3 of this Chapter, is required.

g. Where off-site food service is to occur outdoors, acceptable booth enclosure for all food activities is required per this code.

h. All sewage, including liquid waste, shall be emptied into an approved sewage disposal system.

i. All foods offered for customer self-service (i.e., on a buffet or similar means) shall be protected from contamination by the use of packaging, food guards, display cases, or other effective means. In addition, foods that have been offered in this manner shall not be offered for human consumption upon the completion of each day.

j. Linens that do not come in direct contact with food shall be laundered between operations if they become wet, sticky or visibly soiled.

k. An operating schedule must be provided to the Department upon request. This schedule should include dates and times of events and dates and times when food preparation will occur at the permitted food establishment.

l. All caterers operating from a shared facility must maintain a log of visits to the commissary in the manner prescribed by this Department. This log shall be signed off by the person in charge of the commissary or their designee. This log shall be maintained at the operating location at all times.

REGULATION 8. Trial Review Establishment

a. Areas eligible for review under a Trial Review Establishment permit include structural items, custom equipment, unique architectural designs, alternative equipment systems, or other items the Department deems appropriate.

b. Areas not eligible for review under a trial review establishment permit include food temperature control, personal hygiene control, chemical/reagent materials, any item directly related to cdc risk factors, or any item the Department deems could adversely impact public health.

c. Any establishment that serves a highly susceptible population may not apply for a trial review establishment permit.

d. At the end of the six month period, the Department will transition the business into an applicable food service establishment permit where the owner will either:

(1) Make all necessary modifications to meet current Maricopa County Environmental Health Code regulations; or

(2) Operate in compliance with a Department approved alternative design, equipment and/or active managerial control plan.

e. The Trial Review Establishment plan review fees are the same as the Chapter I Fee Schedule "Environmental Health Plan Review" fees for categories "All Other Food Establishments", "Mobile Food Establishments" and "Pushcart Plan Review". In addition, the Trial Review Establishment permit fees are half the annual "Food Environmental Health Operating Permits" fees by class and seating capacity as listed in the Chapter I Fee Schedule.

REGULATION 9. Confectionary Food Establishment

a. In facilities that do not meet §4-301.12 of the U.S. Food and Drug Administration 2013 Food Code, warewashing can be accomplished using alternative cleaning and sanitizing procedures approved by the Department. The Department will evaluate the type/quantity of utensils required to be cleaned, the type of warewashing equipment available, and the cleaning procedures developed by the applicant as part of the approval process.

b. The Department may approve the use of noncommercial food service equipment if it can be demonstrated the equipment can be sufficiently cleaned and sanitized and can withstand the intended use of the business.

c. Employees must have access to a handwashing sink within 25 feet of the food production area. Employees cannot use a warewashing or food preparation sink for hand washing.

d. Food production, food storage, and equipment storage areas must contain cleanable finishes and be in good repair.

e. Employees must have access to a restroom supplied with a water closet, lavatory with hot and cold water, and soap and paper towels.

f. The Confectionary Food Establishment plan review fee is half the plan review fee for the "All Other Food Establishments" category, and the annual permit fee is half the "Bakery" permit fee, both of which are listed in the Chapter I Fee Schedule of this code.

   When the Department has previously permitted the location, half the new permit application inspection fee listed in the Chapter I Fee Schedule of this code may apply in lieu of half the plan review fee.

MARICOPA COUNTY ENVIRONMENTAL HEALTH CODE

CHAPTER VIII

FOOD, FOOD PRODUCTS, FOOD HANDLING ESTABLISHMENTS

SECTION 7

BOTTLED WATER

In addition to complying with the regulations in Section 1 and 2 of this Chapter, Bottled Water operations shall comply with the following Regulations.

REGULATION 1. Bottled Water Rules

The provisions of A.A.C. Title 9, Chapter 8, Sections 201 through 209, excluding Sections 202 and 208, paragraphs a & b, shall be met.

R9-8-201. Definitions

In this article, unless the context otherwise requires:

1. "Approved Source" when used in reference to a plant's water product or water used in the plant's operations means the source of the water and the water therefrom, whether it be from a spring, artesian well, drilled well, municipal water supply or any other source that has been inspected by the Arizona Department of Environmental Quality and issued a Certificate or Notification of Approval.

2. "Artesian Well Water" means natural water from a well tapping an aquifer in which the water level will stand above the bottom of confining bed of the aquifer and in which the hydraulic pressure of the water in the aquifer is greater than the force of gravity.

3. "Bottled Water" means water that is from an approved source and is placed by a food establishment in a sealed container or package for human consumption or other consumer uses and has been produced by any of the processes described in R9-8-203 or which has undergone minimum treatment consisting of filtration (activated carbon and/or particulate) and ozonation or an equivalent process.

4. "Carbonated Water" means bottled water containing carbon dioxide. It is also known as "Sparkling Water" or "Soda Water".

5. "Cleaning-in-Place" means the automatic or mechanical cleaning and/or sanitizing of a stationary piece of equipment.

6. "CFR"; means the Code of Federal Regulations.

7. "Department" means the Arizona Department of Health Services or a local Health Department designated by the Director.

8. "Distilled Water" means water which has been produced, a process of distillation and meets the definition of purified water on page 1124 in the United States Pharmacopeia (21st Rev.) dated 1985, Mack Publishing Company, Easton, Pennsylvania, 18042, Incorporated herein by Reference and on file with the Office of the Secretary of State.

9. "Drinking Water" means water obtained from an approved source for purposes of human consumption.

10. "Filler Equipment" means a machine used for the purpose of bottling or packaging liquids.

11. "Fluoridated Water" means water containing naturally occurring or added fluoride ion and complying with The Food and Drug Administration Quality Standards set forth in 21 CFR §103.35.d.2 (4-1-89 Ed.), Incorporated herein by Reference and on file with the Office of the Secretary of State.

12. "Mineral Water" means "Natural Water" that contains not less than 500 parts per million dissolved mineral solids and whose source is approved by the Arizona Department of Environmental Quality.

13. "Mineralized Water" means water which has been modified by the mineral addition or deletion and contains not less than 500 parts per million dissolved mineral solids and whose source is approved by the Department of Environmental Quality.

14. "Natural Water" means spring, artesian well or well water, derived from an underground formation, which is unmodified by blending with water from another source or by mineral addition or deletion but may be treated to reduce the concentration of any substance, except minerals, to meet the Safe Drinking Water Standards established by the Arizona Department of Environmental Quality.

15. "Naturally Carbonated" or "Naturally Sparkling" means water that contains carbon dioxide and that emerges from the source and is bottled

directly with its entrapped gas or from which the gas is mechanically separated from the water and later reintroduced into the water at the time of bottling.

16. "Purified Water" means water produced by distillation, deionization or reverse osmosis and meets the definition of purified water on page 1124 in the United States Pharmacopeia (21st Rev.), dated 1985, Mack Publishing Company, Easton, Pennsylvania, 18042, Incorporated herein by Reference and on file with the Office of the Secretary of State.

17. "Soda Water" means bottled water containing carbon dioxide.

18. "Sparkling Water" means bottled water containing carbon dioxide.

19. "Spring Water" means water other than artesian that is derived from a natural underground stratum that flows naturally or by external enhancement to the surface through a natural orifice, or from a bore hole adjacent to the natural orifice and which meets the requirements of "Natural Water".

20. "Well Water" means water from a hole bored into the ground which taps the water of the aquifer and which meets the requirements of "Natural Water".

R9-8-203. Processing Practices

a. All bottled water processed or sold in Arizona shall be processed and packaged in accordance with the U.S. Food and Drug Administration's Good Manufacturing Practice Regulations for Bottled Water beginning at 21 CFR § 129 (4-1-89 ED.), Incorporated herein by Reference and on file with the Office of the Secretary of State.

b. Bottled water shall not be processed or bottled through a line or other equipment used for any other purpose, except that filler equipment used to bottle liquids intended for human consumption may also be used to bottle water, provided:

1. Filler and processing equipment, unless specifically designed for cleaning-in-place, shall be completely disassembled and cleaned after each use and sterilized after assembly.

2. A separate set of gaskets, o-rings and similar flexible materials is used for bottling water.

3. A physical break exists between all processing lines at the filler inlet.

c. The provisions of R9-8-203(b**)** shall not apply to soft drink bottling operations processing carbonated water.

R9-8-204. Labeling Requirements

a. All bottled water processed or sold in Arizona shall conform to the requirements established in A.R.S. §36-906, and shall be labeled in compliance with one of the following standards:

1. Mineral water shall be labeled “Mineral Water” or “Natural MineralWater”.

2. Mineralized water shall be labeled “Mineralized Water”.

3. Spring water shall be labeled “Spring Water” or “Natural Spring Water”.

4. Naturally carbonated or naturally sparking water shall be labeled with the words "Naturally Carbonated" or “Naturally Carbonated” or “Naturally Sparkling”.

5. Bottled water which contains carbon dioxide, other than “Naturally Carbonated or Naturally Sparkling”, shall be labeled with the words “Carbonated” or **“**Sparkling” or “Soda Water”.

6. Well water shall be labeled “Well Water” or “Natural Well Water”.

7. Artesian well water shall be labeled “Artesian Well Water”, "Natural Artesian Well Water" or "Natural Well Water".

8. Purified water shall be labeled “Purified Water” and the method of preparation shall be stated on the label except that purified water produced by distillation may be labeled "Distilled Water".

9. Drinking water shall be labeled “Drinking Water”.

b. Any bottler distributor, or vendor of bottled water whose corporate name, brand name or trademark contains the words “Well”, “Artesian Well”, “Natural”**,** or any derivation of these words shall label each bottle with source of the water in typeface at least equal to the size of the typeface of the corporate name or trademark if the actual source of the bottled water is different from the source stated in the corporate name, brand name or trademark.

c. The use of words "Spring", "Spring Fresh", "Spring Brand", "Spring Type" or other language containing the word "Spring" in a corporate name, brand name or trademark, or in describing the water, is prohibited unless the water is "Spring Water" as defined in R9-8-201.

d. Supplemental printed information and graphics concerning recognized uses of the water may appear on the label but shall not imply properties of the product or preparation methods which are not accurate.

R9-8-205. Source Water Sampling

a. Samples shall be taken of approved sources of water by plant operators or their agents according to the schedule established in A.C. R18-4-223.

b. Sampling and analysis shall be by laboratories certified in accordance with A.A.C. R9-14-602 and shall be in addition to any sampling performed by the Department.

c. Original laboratory records of bacteriological analyses shall be kept by the bottler for five years. Records of chemical analyses shall be kept for ten years.

R9-8-206. Finished Product Sampling

a. To assure that the plant's production of bottled water is in compliance with 21 CFR § 103.35 (4-1-89 Ed.), incorporated herein by reference and on file with the Office of the Secretary of State, the plant shall have the following analyses performed by a laboratory certified according to the provisions of A.A.C. R9-14-602:

1. A representative sample from a batch or segment of a continuous production for each type of bottled water produced by the plant shall be analyzed weekly for microbiological purposes.

2. A representative sample from a batch or segment of a continuous production for each type of bottled water produced by the plant shall be analyzed annually for chemical, physical and radiological compliance.

b. The representative samples required in subsection a above shall be derived from the bottled product.

c. Records of the sampling and analyses shall be maintained on file at the place of operation for a period of two years and shall be made readily available to the Director.

R9-8-207. Transportation Vehicles

a. Bottled water shall be transported in vehicles used only for the transportation of food and other non-toxic products.

b. All vehicles transporting bottled water shall be clean and shall protect the bottled water from dust, dirt, insects**,** and other vermin.

R9-8-209. Public Nuisance

a. Any water supply, label, premises, equipment, process**,** or vehicle which does not comply with the minimum standards of this article shall be considered a public nuisance.

b. All bottled water public nuisances shall be abated by revocation of the bottling establishment's permit or through the procedures established in A.R.S. §36-601 or by any other means permissible by law.

REGULATION 2. Sanitation

Every bottled water plant in which is carried on the process of placing water from an approved source into a sealed container or package shall be operated and maintained in a clean and sanitary condition and in compliance with the appropriate parts of Chapter VIII, Section 1, the general Regulations of this code, and with the specific provisions of this Section.

REGULATION 3. Permit Required

No person shall operate a bottled water plant without holding a valid Permit to do so from the Department.

All bottled water processors shall be inspected prior to issuance of a Permit and once every six months thereafter for compliance with the minimum standards of this Article.

REGULATION 4. Water Quality and Source

a. All bottled water processed in Arizona shall be obtained from a source whose quality is approved by the Director of the Department of Environmental Quality or a local Health Department designated by the Director in accordance with provisions of the A.A.C., Title 18, Chapter 4, Article 2.

b. With the exception of mineral water, mineralized water carbonated water, bottled water processed or sold in Arizona shall meet or exceed the minimum quality standards prescribed by 21 CFR §103.35 (4-1-89 ED.), Incorporated herein and on file with the Office of the Secretary of State.

MARICOPA COUNTY ENVIRONMENTAL HEALTH CODE

CHAPTER IX

MOBILE HOME PARKS

SECTION I

GENERAL PROVISIONS

REGULATION 1. Definitions

a. "Dependent Recreational Vehicle" means a recreational vehicle that does not have a toilet, bathtub, shower, sink, sanitary drain or water service connection pipe.

b. "Independent Recreational Vehicle" means a seasonal or temporary vehicle with living quarters that includes a toilet, bathtub and/or shower, sink and sanitary drain and/or water service connection pipe.

c. "Mobile Home" means a manufactured residential structure that is transportable in one or more sections, built on an integrated chassis, and designed to be used as a dwelling when connected to the required utilities, and includes the plumbing, heating, air-conditioning, and electrical systems contained in the structure.

d. "Mobile Home Park" means any land upon which two or more occupied Mobile Homes or recreational vehicles used for habitation are parked, whether free of charge or for income producing purposes, including any roadway, building, structure, vehicle, or enclosure used or intended for use as part of the facilities of the park. This definition does not apply where all Mobile Homes or recreational vehicles are occupied by the owner of the land and his immediate family. This definition does not apply to recreational areas or to overnight parking by agencies of local, state and federal governments, where posted restrictions for use of such areas are provided.

e. "Mobile Home Space" means the land upon which not more than one Mobile Home or recreational vehicle is located.

f. "Service Building" means a permanent structure containing flush toilets, shower facilities, hand washing sinks, and utility sinks primarily for the use of recreational vehicle occupants.

REGULATION 2. Permit Required

No person may operate a Mobile Home park without a valid permit or otherwise than in compliance with these Regulations.

REGULATION 3. Plans and Specifications Required

a. No person may begin construction of, maintain, or operate a Mobile Home Park until plans and specifications showing compliance with these Regulations have been submitted to and approved by the Department. Plans for the water supply and wastewater system shall be prepared by or under the supervision of a currently registered Arizona Professional Engineer. The engineer shall affix his signature and Arizona seal of registration to all plans submitted for approval, and shall certify in writing that the plan documents comply with these Regulations.

b. Plans and specifications shall show:

(1) The location, area and dimensions of the proposed Mobile Home Park;

(2) The number and location of Mobile Home spaces for Mobile Homes, Independent Recreational Vehicles and Dependent Recreational Vehicles;

(3) The location of roadways and any walkways;

(4) The location of any service building or other relevant structures;

(5) A floor plan of any service building showing all facilities therein;

(6) The location and size of on-site water lines**,** sewer lines**,** and the water and sewage disposal facilities;

(7) The name of the water supplier, the size of the off-site existing water main, and the average and minimum off-site water main pressures;

(8) Other related buildings and improvements constructed or to be constructed within the Mobile Home park;

(9) The distance in feet to the nearest public water supply main and to a sewer main of a municipal or community system if connection to them is not proposed;

(10) The typical Mobile Home space layout.

c. No change or modification of water supply or sewage disposal facilities in any existing Mobile Home park shall be made until plans and specifications have been submitted to and approved by the Department.

d. All plans and specifications shall be submitted to the Department in duplicate and accompanied by the required plan review fees.

e. An application for approval by the Department, prepared in duplicate on forms furnished by the Department, shall be filed at the time the plans are submitted for approval.

f. The applicant must be in compliance with all other Regulations and requirements, including the Planning and Development Department's approval for unincorporated Maricopa County.

REGULATION 4. Inspections

a. Notwithstanding the inspection and approval thereof by any other agency, water lines or sewer lines installed in the Mobile Home park shall not be covered prior to inspection and approval by the Department.

b. At least fifteen (15) days prior to the expected date of completion of the project, the permit applicant or his authorized agent shall request final inspection of the project, and operation of the Mobile Home park shall not commence before the final inspection has been completed, a certificate of approval to operate has been issued, and a Permit has been issued for the Mobile Home park.

MARICOPA COUNTY ENVIRONMENTAL HEALTH CODE

CHAPTER IX

MOBILE HOME PARKS

SECTION 2

GENERAL LAYOUT

REGULATION 1. Sites

Every Mobile Home park shall be located on a site that is graded to ensure effective drainage and to prevent standing pools of water in compliance with applicable local and County Rules and Regulations.

a. The size of Mobile Home spaces shall comply with applicable local and County ordinances, Regulations and/or guidelines.

b. Every occupied Mobile Home or Recreational Vehicle shall be parked in an approved Mobile Home space, which shall be clearly marked. Not more than one occupied Mobile Home or Recreational Vehicle may be parked in a single Mobile Home space.

c. A dependent Recreational Vehicle parked on a Mobile Home space, is still a Recreational Vehicle and shall not be considered a Mobile Home.

MARICOPA COUNTY ENVIRONMENTAL HEALTH CODE

CHAPTER IX

MOBILE HOME PARKS

SECTION 3

FACILITIES

REGULATION 1. Sanitary Facilities

Each Mobile Home park accommodating dependent Recreational Vehicles shall provide toilets, baths or showers, sanitary sinks and other sanitation facilities as follows:

Number of

Parking Spaces	Toilet Men	Toilet Women	Urinals Men	Lavatories Men	Lavatories Women	Showers Men	Showers Women	(2) Other
1-15	1	1	1	1	1	1	1	1 Service Sink
16-30	1	2	1	2	2	1	1	with a flushing
31-45	2	2	1	3	3	1	1	rim
46-60	2	3	2	3	3	2	2	
61-80	3	4	2	4	4	2	2	1 utility sink
81-100	3	4	2	4	4	3	3	

Parking areas having more than 100 Dependent Recreational Vehicle spaces shall provide 1 additional toilet and lavatory for each sex per each additional 30 Dependent Recreational Vehicle spaces; 1 additional shower for each sex per each additional 40 Dependent Recreational Vehicle spaces; and 1 additional men's urinal per each additional 100 Dependent Recreational Vehicle spaces.

When a Mobile Home park requiring a service building is operated in connection with a resort or other business establishment, the number of sanitary facilities for such business establishment shall be in excess of those required by the schedule for Dependent Recreational Vehicle spaces and shall be based on the total number of persons using such facilities.

REGULATION 2. Buildings and Grounds

a. Service buildings shall be permanent structures complying with all applicable ordinances and statutes regulating building construction and shall be located at least ten (10) feet from

any Recreational Vehicle space, but not more than two hundred (200) feet from any dependent Recreational Vehicle which it serves.

b. The service buildings shall:

(1) Be well lit and ventilated at all times;

(2) Be constructed of moisture-resistant materials, inducing painted woodwork, which is able to withstand repeated cleaning and washing without substantial deterioration;

(3) Have openings to the exterior effectively screened against fly and insect entrance;

(4) Be equipped with properly vented and approved heating facilities that are not of the open-flame type;

(5) Have floors of water-impervious material that slope to a properly installed floor drain; and

(6) Have toilet paper, soap and single-use hand towels or hand drying devices provided at toilets and hand washing facilities.

c. Service Buildings -- Exception
A Mobile Home park, whose occupancy is limited exclusively to independent Recreational Vehicles, shall be deemed to comply with the requirements for service building facilities.

MARICOPA COUNTY ENVIRONMENTAL HEALTH CODE

CHAPTER IX

MOBILE HOME PARKS

SECTION 4

WATER SUPPLY

REGULATION 1. General Provisions

The water supply and distribution systems serving the Mobile Home spaces and any service building shall comply with all applicable provisions of Chapter V (Water Supply) of this Environmental Health Code.

REGULATION 2. Special Provisions

a. The water supply system shall be designed, constructed, and maintained to satisfy a supply demand of at least six (6) fixture units at a residual pressure of at least twenty (20) pounds per square inch at each Mobile Home Space, in addition to the water requirements of any service building.

b. Each Mobile Home and Recreational Vehicle space shall be provided with a water service pipe terminating at least four (4) inches above ground level. The pipe shall be located so as to provide reasonable protection against damage. A Mobile Home or Recreational Vehicle directly connected to such water service pipe shall also be properly connected to an approved waste disposal system.

c. Water at a minimum temperature of 120°F (49°C) shall **be** provided at all times in the service building for general sanitation use.

d. When the source of water and the water supply system are installed on the Mobile Home park, they shall include water storage facilities of at least two hundred fifty (250) gallons per Mobile Home space, in addition to the requirements of any service building.

MARICOPA COUNTY ENVIRONMENTAL HEALTH CODE

CHAPTER IX

MOBILE HOME PARKS

SECTION 5

SEWAGE DISPOSAL

REGULATION 1. Approved Sewage Disposal Systems

Liquid wastes from all trailer coaches, buildings and fixtures within the trailer coach park shall discharge into a public sewer system, approved private sewerage system, or approved septic tank system. (See Chapter II)

REGULATION 2. Sewage Systems

The sewer system for Mobile Home parks shall be designed in compliance with the design standards found in Chapter II of this Environmental Health Code.

REGULATION 3. Pipe Size

The size of the sewer service pipe shall be as outlined in the applicable Municipal Plumbing Code, but in no case shall it be smaller than that required by the Maricopa County Plumbing Code

REGULATION 4. Cleanouts--Branches

Cleanouts shall be provided and located in sewers as required by the applicable Municipal Plumbing Code, but in no case shall it be less than that required by the Maricopa County Plumbing Code.

REGULATION 5. Connections

a. The wastewater plumbing from the Mobile Home sewer connection to the public Sewerage system, approved private Sewerage system, or approved septic tank system is the responsibility of the owner of the Mobile Home park.

b. Each Mobile Home space shall be provided with a trapped sewer, at least three (3) inches in diameter, into which all Mobile Home plumbing wastes shall be discharged. Exception: Such traps are not required in Mobile Home parks restricted to Mobile Homes in which all fixtures discharge through a trap located in the Mobile Home plumbing system.

c. Sewer connections to Mobile Homes or Recreational Vehicles shall be vapor tight and capped or plugged when not in use. The extension through the ground of the Sewage pipe

shall be protected by metal casing or concrete mount placed so as to require a minimum of connector piping.

REGULATION 6. Vents and Traps

Vents and traps shall be provided in all Sewage lines. Mobile home space drain inlets may be installed without traps where the mobile home's plumbing fixtures are effectively trapped and vented.

REGULATION 7. Public Sewerage Systems

Where a public sewerage system is to be used and is already in existence, or if Sewerage Systems are proposed and have been approved by the Department, only the location and size of the Sewage lines within the park shall be shown. Approval to construct the Sewerage System serving the Mobile Home park will not be given unless the capacity of the receiving Sewerage System and the treatment facility that will receive the wastes are determined to have adequate capacity for the increased load resulting from the installation of the Mobile Home park.

MARICOPA COUNTY ENVIRONMENTAL HEALTH CODE

CHAPTER IX

MOBILE HOME PARKS

SECTION 6

REFUSE DISPOSAL

All solid wastes shall be stored, collected and disposed of in compliance with the applicable Regulations of Chapter II of this Environmental Health Code.

MARICOPA COUNTY ENVIRONMENTAL HEALTH CODE

CHAPTER IX

MOBILE HOME PARKS

SECTION 7

Reserved

MARICOPA COUNTY ENVIRONMENTAL HEALTH CODE

CHAPTER IX

MOBILE HOME PARKS

SECTION 8

ANIMALS, RODENTS AND VERMIN

All regulations in Chapter III of this Environmental Health Code that apply to animals, rodents, insects and vermin also apply to Mobile Home parks.

MARICOPA COUNTY ENVIRONMENTAL HEALTH CODE

CHAPTER IX

MOBILE HOME PARKS

SECTION 9

ENFORCEMENT

REGULATION 1. Enforcement

Any Person who constructs, operates or maintains a Mobile Home Park in violation of this Environmental Health Code is subject to the penalties provided by law.

MARICOPA COUNTY ENVIRONMENTAL HEALTH CODE

CHAPTER X

RESIDENCE ACCOMMODATIONS

SECTION 1

GENERAL PROVISIONS

REGULATION 1. Definitions

a. "Transient dwelling establishment" means and includes any place such as a hotel, motel, motor hotel, resort, tourist court, tourist camp, rooming house, boarding house, inn, hostel, and similar facilities by whatever name called, consisting of two or more dwelling units where sleeping accommodations, linens, and cleaning services are provided for transients or tourists provided, however, that the term shall not be construed to include apartments, and similar facilities if occupancy of all dwelling units is on a permanent basis.

b. "Transient" means any person who occupies a dwelling unit in a transient dwelling establishment as defined above.

c. "Dwelling unit" means any suite, room, cottage, bedroom, or other unit established, maintained, held out or offered by a transient dwelling establishment for occupancy.

d. "Licensed Pest Control Applicator" means a person who is licensed by the Arizona Office of Pest Management (OPM) to apply pesticides.

e. "Residence Accommodation" means a place of human habitation, such as a transient dwelling establishment, apartment, condominium, house, manufactured home, or townhome.

REGULATION 2. Permits, Plans

a. No person shall operate a transient dwelling establishment without holding a valid permit to do so from the Department.

b. No new establishment regulated under this chapter shall be constructed nor any additions or major alterations be made on existing facilities until plans and specifications showing in detail the work to be done have been submitted to and approved by the Department. The owner, operator, or his authorized agent shall certify in writing that the plan documents comply with these regulations.

REGULATION 3. Right of Inspection

The Health Officer is hereby directed to make inspections to determine the condition of housing and premises located within Maricopa County in order that he may perform his duty of safeguarding the health of the occupants of such housing and of the general public. For the purpose of making such inspections, the Health Officer is hereby authorized to enter, examine and survey at all reasonable times all housing described in this chapter. The owner or occupant of every dwelling, or the person in charge thereof, shall give the Health Officer free access to such housing and its premises, at all reasonable times for the purpose of such inspection, examination and survey.

REGULATION 4 . Sanitation of Habitable Buildings

a. In every public or private building which is in whole or in part leased by the owner or his agent for habitation, or which is permitted to be used by patrons or the general public, each plumbing fixture, pipe, drain, sewer and sewer connection shall be properly plumbed, of sanitary design and construction, maintained in repair and in a sanitary condition.

b. No person shall occupy any building, dwelling or vehicle as a place of habitation unless adequate and sanitary facilities for the disposal of sewage have been provided therefor.

c. An owner or lessee of a transient dwelling establishment, residence accommodation, or business establishment (collectively hereinafter referred to as "property") shall not turn off the water supply or cause such water supply to be turned off, except in case of necessity arising from a serious leak or bursting pipes. In such cases, repairs shall promptly be made, or caused to be made, by the property owner, property manager, or lessee.

d. Every owner shall provide suitable and sufficient approved containers for storing garbage and rubbish in compliance with the regulations in this code.

REGULATION 5. Pipeless Heaters, Heating Stoves and Space Heating Devices

a. Every indoor stove, space heater, or other heater which uses carbonaceous fuel shall be fitted with a continuous gastight pipe vent which discharges directly to the outer air, or to a chimney which discharges directly to the outer air without backup, all gaseous products of combustion of the fuel.

b. The health officer having sufficient reason to believe that any such heater is defective or improperly vented, and does or may discharge into occupied indoor space excessive concentrations of noxious products of combustion, may seal such a heater to prevent its use. No person shall remove the seal or use the heater unless and until the defect causing or likely to cause the prohibited discharge has been corrected.

c. Where gas is used as a fuel, the connection between the source of gas supply and the heating stove, space heating appliance, or tank water heater, shall be of substantial metallic construction, made gastight and impervious. No rubber or other non-metallic hose connection shall be used.

REGULATION 6. Compliance

Representatives of the Department shall make such inspections of residence accommodations as are necessary to assure compliance with these regulations. A copy of the report of the inspection shall be furnished the owner, lessee, or operator of the transient dwelling establishment indicating the degree of compliance or noncompliance with the provisions of these regulations. Failure to correct any violation noted within the time limit specified shall be cause for revocation or suspension of the permit to operate.

MARICOPA COUNTY ENVIRONMENTAL HEALTH CODE

CHAPTER X

RESIDENCE ACCOMMODATIONS

SECTION 2

TRANSIENT DWELLING ESTABLISHMENTS

REGULATION 1. Dwelling Units

a. Dwelling units shall be of sufficient size to afford ample circulation of air and freedom of movement but not less than 100 square feet of floor area shall be provided for each unit, exclusive of bathrooms, closets, kitchens, and similar ancillary facilities.

b. Floors of all rooms shall be of such construction as to be easily cleaned and shall be kept clean and in good repair.

c. The walls and ceilings of all rooms shall be of a finish that will permit easy cleaning and shall be kept clean and in good repair.

d. Where windows are relied on to provide light and ventilation, the area of the windows for each dwelling unit shall be equal to at least 20% of the floor area.

e. Not less than 25% of the window area furnished shall be capable of being opened unless other satisfactory means of ventilation is provided. Windows capable of being opened shall be effectively screened.

f. Furniture, drapes, carpets, and other accessories shall be kept clean and in good repair.

g. Dwelling units shall be maintained free of insects, rodents, and other vermin.

h. The provisions of A.R.S. Title 36, Chapter 13, Article 2 relating to gas appliances shall be met.

i. All dwelling units shall be adequately heated, cooled, ventilated and lighted.

j. All walkways, driveways, hallways, passageways shall be adequately lighted at night.

k. Transient dwelling establishments shall be constructed in conformance with the "Uniform Building Code" published by the International Conference of Building Officials.

REGULATION 2. Bedding

a. The beds, mattresses, pillows, and bed linen, including sheets, pillow slips, blankets, and other similar types of bed linens, used in all transient dwelling establishments shall be maintained in good repair; shall be kept clean and free of vermin; and shall be properly stored and protected from contamination and filth when not in use.

b. Each bed, bunk, cot, or other sleeping place shall be provided with pillow slips, under and top sheets, for the use of guests. Sheets and pillow slips shall be adequately sized to completely cover the mattress and pillow.

c. Clean linen shall be replaced by staff at the request of a guest, between guests, and at least once per week.

REGULATION 3. Water Supply

Each transient dwelling establishment shall be provided with an adequate and safe water supply from an approved source. Whenever a transient dwelling establishment finds it necessary to develop a source or sources of supply, complete plans and specifications of the proposed water system shall be submitted to the Department and approval received prior to the start of construction. The design, construction, and operation of all such water supply systems shall comply with Chapter V of this code.

REGULATION 4. Toilet; Rooms

a. Adequate and convenient toilet, sink, and bathing facilities shall be provided at all transient dwelling establishments and shall be available to the guests at all times.

b. Where private or connecting toilet rooms are not available for each dwelling unit, separate and plainly marked central toilet rooms for each sex shall be provided, located within 200 feet of such units.

c. Central toilet rooms shall provide not less than one toilet, one sink, and one tub or shower for each sex for each 10 dwelling units, or major fraction thereof, not having private or connecting baths.

d. Hot and cold water and soap shall be provided in all toilet rooms. Clean individual sanitary towels shall be furnished for each guest.

e. Toilet rooms shall be well lighted and ventilated. Where gravity or mechanical ventilation is provided, the ventilation ducts for the toilet rooms shall not be connected into ventilation ducts from or to any dwelling unit.

f. Floors of all toilet rooms shall be of easily cleanable construction; shall be kept clean and in good repair; and where necessary shall slope to properly located drains, where required.

g. Walls and ceilings of all toilet rooms shall be of easily cleanable construction and shall be kept clean and in good repair.

REGULATION 5. Sewage Disposal

a. The liquid wastes from all transient dwelling establishments shall be discharged into a public sewer system in compliance with applicable local ordinances or codes or into separate sewage disposal facilities approved by the Department.

b. Separate sewage disposal facilities will not be approved where in the opinion of the Department connection to a public sewer is practicable.

c. Where separate sewage disposal facilities are proposed, the design construction of such system shall be in accordance with Chapter II of this code. Plans and specifications for such system shall be submitted to the Department and approval received prior to start of construction.

REGULATION 6. Drinking Water Ice; Utensils

a. Where drinking fountains are provided, the fountain shall be constructed so that the drinking is from a free jet projected at an angle from the vertical, and provided with a guard to prevent the mouth being placed directly against the orifice. There shall be no possibility of the orifice becoming submerged. The fountain bowl shall be constructed of nonabsorbent easily cleanable material.

b. After each occupancy, all multi-use glasses and other multi-use utensils furnished to each dwelling unit shall be cleaned and sanitized in a manner approved by the Department. If these items are not cleaned using an approved dishwasher in the guest room, then a sink with three (3) compartments and integral double drain boards or a dishwasher having a functional and/or adequate sanitizing cycle shall be used in another approved area of the transient dwelling establishment. All equipment shall be certified or classified by an American National Standards Institute accredited certification program, or deemed acceptable by the Department. The Department may approve any type of device or procedure for cleaning and sanitizing tableware if the property owner or property manager demonstrates the procedure is effective and reliable for that purpose.

c. The use of a common drinking cup is prohibited.

d. Ice shall be obtained from an approved source and shall be stored and handled in such a manner as to prevent contamination.

REGULATION 7. Refuse Storage and Disposal

a. All refuse shall be stored and disposed of in accordance with Department regulations governing the storage collection, transportation and disposal of refuse and other objectionable wastes.

b. Garbage cans shall be thoroughly washed after emptying and shall be maintained free of odors and other objectionable conditions.

c. All containers for rubbish shall be cleaned as often as necessary to prevent a nuisance.

d. All refuse containers shall be maintained in good repair.

REGULATION 8. Food Service

The storage, preparation and serving of food and drink shall comply with the requirements of Chapter VIII of this code.

REGULATION 9. Grounds

a. Grounds of a transient dwelling establishment shall be properly graded and drained.

b Grounds shall be kept clean and free of accumulations of refuse and other debris. There shall be no evidence of fly, mosquito, or rodent breeding or infestation.

REGULATION 10. Reserved

REGULATION 11. Notification of Disease and Other Hazards

a. The owner or operator of a transient dwelling establishment shall immediately report to the local Board of Health or Maricopa County Department of Public Health (MCDPH) the name of any guest or employee suspected or known to have a contagious disease, in accordance with A.R.S. Title 36, Chapter 6, Article 2.

b. Every dwelling unit, after being occupied by a person known or suspected of having a contagious disease, shall be rendered non-contagious by treatment method as specified by the MCDPH before further occupancy.

MARICOPA COUNTY ENVIRONMENTAL HEALTH CODE

CHAPTER XI

ANIMALS

SECTION 1

REGULATION 1. General

a. Cattle, horses, sheep, goats, dogs, cats, birds, fowl, and any other animal or bird, and the pens, stalls, stables, yards, shelters, cages, areas, places and premises where they are held or kept, shall be so kept and maintained that flies, insects, or vermin, rodent harborage, odors, ponded water, the accumulation of manure, garbage, refuse or other noxious material do not become a public health nuisance.

b. Manure and droppings shall be removed from pens, stables, yards, cages and other enclosures at least twice weekly and handled or disposed of in an approved manner free of health hazard or public health nuisance.

c. Mound storage of droppings or manure will be permitted only under such conditions as to protect against the breeding of flies and to prevent migration of fly larvae (maggots) into the surrounding soil.

d. Watering troughs or tanks shall be provided, which shall be equipped with adequate facilities for draining the overflow, so as to prevent the ponding of water, the breeding of flies, mosquitoes or other insects, or a health hazard.

e. No putrescible material shall be allowed to accumulate on any premises, and all such material used as feed which is unconsumed shall be removed daily and disposed of by burial or other approved means.

f. A dead domestic or farm animal shall be buried or disposed of in a sanitary manner within 72 hours after its death or after the department has been notified of its existence, whichever is longer.

REGULATION 2. Piggeries

a. No pigsty or piggery shall be built or maintained on marshy ground or land subject to overflow, nor within 200 feet of any stream, canal, or other source of water supply, nor within 300 feet of an inhabited house or occupied building on an adjoining property.

b. No pigs may be kept within the corporate limits of any city or town in Maricopa County.

c. Feed troughs shall be provided for the feeding of vegetables, meat scraps, or garbage, and such feeding shall be done exclusively in containers or on an impervious platform.

d. Unslaked lime, hypochlorite of lime, borax or mineral oil shall be used daily in sufficient quantities to prevent offensive odors and the breeding of flies.

e. No organic material furnishing food for flies shall be allowed to accumulate on the premise.

REGULATION 3. Skunks and Raccoons

No skunk or raccoon shall be sold, bartered, exchanged or be given as a gift to be kept within Maricopa County. Exceptions shall be a bona fide publicly or privately owned zoological park, or circus, or any other show where animals are exhibited but are not in physical contact with the public, or by scientific or educational institutions, or the use of such animals in fur farming.

MARICOPA COUNTY ENVIRONMENTAL HEALTH CODE

CHAPTER XI

ANIMALS

SECTION 2

KENNELS AND PET SHOPS
VETERINARY CLINICS AND HOSPITALS

REGULATION 1. Definitions

a. "Animal" means any warm blooded mammal, reptile, amphibian, or bird that is capable of being a carrier of zoonotic diseases. This definition does not include fish and insects.

b. "Animal Shelter" means a facility that is used to house or contain stray, homeless, abandoned or unwanted animals, and that is owned, operated or maintained by a public body, an established humane society, animal welfare society, society for the prevention of cruelty to animals, or other nonprofit organization devoted to the welfare, protection, and humane treatment of animals.

c. "Kennel" means an enclosed, controlled area, inaccessible to other animals, in which a person keeps**,** harbors or maintains five or more dogs under controlled conditions.

d. "Pet shop" means a commercial establishment at which any animal is given away, kept for sale, bathed, groomed, or treated for vermin.

e. "Veterinary clinic" means any establishment operated by a licensed veterinarian to provide dental, medical, or surgical treatment, and care, including grooming, for animals on an outpatient basis.

f. "Veterinary hospital" means any establishment operated by a licensed veterinarian providing clinical facilities and housing animals for dental, medical, or surgical treatment. A veterinary hospital may have adjacent to or in conjunction with it or as an integral part of it, pens, stalls, cages or kennels for quarantine, observation or boarding.

g. "Zoonotic Disease" A disease communicable from animals to humans under natural conditions.

REGULATION 2. Plans and Permits

a. No pet shop shall be constructed, nor shall any major alteration or addition be made thereto, until detailed plans and specifications for the premises have been submitted to and approved by the Department; nor shall any construction, alteration or addition be made excepting in accordance with approved plans and specifications. The owner, operator, or his authorized agent shall certify in writing that the plan documents comply with these regulations.

b. Construction shall conform to approved plans. Changes in construction; deletion or addition of equipment will require prior approval.

REGULATION 3. Permit Required

No person shall operate a pet shop without a valid permit to do so from the Department or otherwise than in compliance with the applicable regulation in this Code. The permit shall be posted in a conspicuous place on the premises. This Code shall not apply to Animal Shelters and Kennels.

REGULATION 4. Walls and Ceilings

Walls and ceilings of areas in which animals are bathed or groomed, and in toilet rooms shall be finished in a light color and shall have smooth, easily cleanable surfaces.

REGULATION 5. Floors

a. Interior floors shall be of impervious construction where they are subject to flooding, spillage, or other conditions of hard use, such as in bathing, grooming, toilet rooms and all areas in which animals are kept.

b. Carpeting, where permitted, shall be of closely woven construction, easily cleanable and maintained clean and in good repair. Carpeting is prohibited in bathing, grooming, toilet rooms and all areas in which animals are kept. In areas where birds are on perches, floors shall be of impervious construction. No carpeting shall be allowed within 18 inches of the outer end of the perch.

REGULATION 6. Light and Ventilation

The premises where animals are kept shall be ventilated to the external air by forced draft ventilation, screened doors or windows, and adequately lighted. At least 20 foot candles of light shall be provided in all bathing, grooming and toilet areas. At least 10 foot

candles shall be provided in all other areas.

REGULATION 7. Toilet Facilities and Hand Washing Facilities

Adequate and convenient toilet facilities, approved by the Department, shall be provided for employees. All toilet rooms shall have smooth and easily cleanable walls and ceilings, adequate ventilation to the outside air. Hand wash facilities shall be located in or immediately adjacent to the toilet room. Each lavatory shall be provided with hot and cold water tempered by means of a mixing valve or combination faucet. Any selfclosing, slow closing, or metering faucet used shall be designed to provide a flow of water for at least 15 seconds without the need to reactivate the faucet.

REGULATION 8. Sinks and Drainage

A properly plumbed, sewer connected sink having an adequate supply of hot and cold water readily accessible to the portions of the premises in which animals are kept, shall be provided**.** A separate mop/utility sink shall be required for maintenance and cleaning functions.

REGULATION 9. Animal Housing

a. Pet shop cages in which animals are kept shall be constructed of durable material which may be readily cleaned and disinfected with approved solutions, with live steam, or by other approved means. Cages shall be designed and constructed so that all their parts are easily cleanable. In pet shops, each dog and cat over four months of age shall be kept in an individual cage, and at no time shall there be any commingling of animals which have different owners.

b. Sick animals shall be isolated in rooms or cages separate from healthy animals.

c. Birds shall be housed at least 12 inches above the floor.

REGULATION 10. Maintenance

The premises, implements, cages and appurtenances shall be kept clean, sanitary, free of animal parasites, or other health hazards.

REGULATION 11. Limitation

a. No portion of a pet shop, kennel or veterinary hospital in which animals are kept shall be used for human habitation.

b. Food for human consumption shall not be prepared or served in the same room in which animals are kept.

REGULATION 12. Method of Disposal

All putrescible material, garbage, excreta, refuse, and dead animals shall be stored in durable fly-tight containers and disposed of in accordance with the provisions of this Code governing the storage and disposal of refuse and other objectionable wastes. All such material shall be removed from the property at least twice weekly in an approved manner.

REGULATION 13. Records

a. Pet shops shall keep records in which an entry shall be made immediately of every animal purchased, sold, boarded or kept on the premises, showing origin, for whom the animal was boarded and kept, including the age, sex and breed, where applicable. The required records shall be legibly written in English and such records shall be available for inspection by the Environmental Health Officer. All such required records shall be kept for at least 2 years.

b. Veterinary clinics and hospitals shall keep a record book or record card for each animal admitted, with an accurate description of the animal, treatment (dental, medical or surgical) including diagnosis if possible, vaccinations (including rabies), and dates of admission and discharge. Incidence of disease known or suspected to be communicable to man shall be reported to the Environmental Health Officer.

REGULATION 14. Veterinarians

These regulations shall not be used to interfere with a licensed veterinarian in the practice of their profession but such veterinarian shall comply with the sanitation provision of this Code.

MARICOPA COUNTY ENVIRONMENTAL HEALTH CODE

CHAPTER XI

ANIMALS

SECTION 3

MOBILE PET GROOMERS/SHOPS

REGULATION 1. DEFINITIONS

a. "Mobile Pet Groomers/Shops" means an enclosed vehicle-mounted establishment that is designed to be readily movable and from which any animal is given away, kept for sale, bathed, groomed, or treated for vermin.

b. "Animal Commissary" is a pet shop that acts as a base of operations for a mobile pet shop. All mobile pet shops shall operate from an Approved, fixed, permitted Animal Commissary and physically return to the Animal Commissary at least once during each operating day.

c. "Animal Commissary" does not include:

   1. A private residence that is not permitted as a pet shop by this Code.
   2. Permitted Mobile Pet Groomers/Shops.
   3. Any permitted food establishment.

REGULATION 2. PLAN APPROVAL

a. Mobile Pet Groomers/Shops shall not be constructed, altered or increased in size, until detailed plans and specifications have been submitted to and Approved by the Department. The owner, operator, or his authorized agent shall certify in writing that the plan documents comply with this Regulation.

b. The construction, alterations, or improvements shall conform to the Approved plans and specifications. All changes in construction or the deletion or addition of equipment requires prior approval by the Department.

REGULATION 3. PERMIT REQUIRED

a. No Person shall operate a Mobile Pet Groomer/Shop without a valid permit to do so from the Department. The Permit shall be posted in a conspicuous place on the vehicle.

b. A separate Permit is required for each Mobile Pet Groomer/Shop. Permits are not transferrable from Person to Person, place to place, or vehicle to vehicle.

REGULATION 4. COMPLIANCE

a. All Mobile Pet Groomers/Shops shall be operated and maintained in a clean and sanitary condition in compliance with the appropriate parts of this Section and with Chapter XI, Sections 1 and 2.

REGULATION 5. GENERAL REQUIREMENTS

a. All Mobile Pet Groomers/Shops shall clearly display the name of the business on the two sides and rear exterior of the vehicle in letters at least three inches high and a minimum of 3/8 inch wide. When more than one Permit is issued with the same business name to the same Permit holder, the vehicle identification number shall be clearly displayed along with the business name.

b. Compressors, auxiliary engines, generators, and similar mechanical equipment that are not an integral part of a Mobile Pet Groomer/Shop shall be located away from the area where animals are serviced or stored. This equipment shall be accessible from the exterior of the Mobile Pet Groomer/Shop.

c. Sanitary toilet facilities for use by employees shall be readily available within 200 feet of all Mobile Pet Groomers/Shops that are operated at one location for more than one hour.

d. Mobile Pet Groomers/Shops shall not operate without hot and cold potable water, hand washing soap, sanitary towels, and Title 21 Code of Federal Regulations Approved hand sanitizer that are available for immediate use at all times.

e. When in operation, the area around a Mobile Pet Groomer/Shop shall be kept clean and free from litter, Garbage, and Rubbish at all times.

f. All support and servicing activities for mobile pet shops shall be carried out at the permitted animal commissary. These activities include disposing of wastewater into the sanitary sewer system (wastewater shall not be discharged into a storm drain or onto the ground), washing the vehicle, and recharging the potable water tank. These activities shall not be carried out at an un-permitted private residence. A written agreement with a permitted Animal Commissary must be provided to the Department prior to Permit approval. In addition, the owner or operator shall maintain an Animal Commissary visits log that may be reviewed by the Department during each routine inspection.

REGULATION 6. INTERIOR FIXTURES

a. Interior walls and ceilings of all Mobile Pet Groomers/Shops shall be light in color and shall have smooth and easily cleanable surfaces.

b. Interior flooring shall be of impervious construction where it is subject to flooding, spillage, hard use, or where pets are serviced or stored. Carpeting is prohibited in Mobile Pet Groomers/Shops.

c. Windows shall be protected with an Approved sliding screen, window, or a mechanical air curtain.

REGULATION 7. WATER AND WASTEWATER

a. Mobile Pet Groomers/Shops shall provide an Approved potable water hose designated for potable water only. This hose shall only be used to fill the fresh water tank.

b. All connections on the vehicle for waste discharge shall be of different sizes or types than those used for supplying potable water to the Mobile Pet Groomer/Shop.

c. Waste connections shall be located lower than potable water inlet connections to preclude contamination of the potable water system.

d. Mobile Pet Groomers/Shops shall provide a minimum flow rate of hot and cold water to any sink or tub of one gallon per minute.

e. Mobile Pet Groomers/Shops that bathe, groom, or treat pets shall have a permanently installed potable water storage tank with a minimum capacity of 30 gallons.

f. Mobile Pet Groomers/Shops that are limited to the sale or distribution of pets shall have a permanently installed potable water storage tank or self-contained hand washing station with a minimum capacity of 5 gallons for the purpose of hand washing only.

g. Potable water system inlets shall be protected from potential contamination with Approved back-flow preventers. Potable water inlets shall be no larger than ¾ inch unless otherwise Approved by the Department.

h. A liquid waste storage tank with a capacity 15% greater than the potable water storage tank shall be installed in all Mobile Pet Groomers/Shops.

i. Mobile pet shops shall not connect to potable water or wastewater systems except during servicing operations at the permitted animal commissary.

j. Water and sewage piping connected to and serving Mobile Pet Groomers/Shops that are Approved by the Department shall be connected to an Approved potable water system and shall also be connected to an Approved sewage disposal system.

k. All exterior water system connections for vehicles used as Mobile Pet Groomers/Shops shall be provided with an Approved back-flow prevention device.

l. All water tanks, pumps, and hoses shall be flushed and sanitized before being placed into service after construction, repair, modification, and periods of non-use longer than 7 consecutive days.

m. All wastewater and garbage disposal shall be conducted in accordance with this Code and all other applicable state and local Rules and Regulations.

REGULATION 8. ADDITIONAL REGULATIONS FOR MOBILE PET GROOMERS/SHOPS THAT SELL OR DISTRIBUTE PETS

a. When selling or distributing pets outside the vehicle (*e.g.,* a swap meet), a sign indicating the business name shall be displayed with letters that are at least 6 inches high by 1 inch wide. The sign shall be visible to the consumer and shall be in addition to any signs used on the vehicle.

b. When selling or distributing pets outside the vehicle, a self-contained hand washing station shall be present.

c. When selling or distributing pets outside the vehicle, the permitted Mobile Pet Groomer/Shop shall be present.

d. Mobile pet shops that sell or distribute pets shall return to the permitted Animal Commissary at least once a day to store pets, and for cleaning, waste disposal, and servicing. A written agreement with the permitted Animal Commissary must be provided to the Department upon request and at the time the Permit is issued or renewed.

MARICOPA COUNTY ENVIRONMENTAL HEALTH CODE

CHAPTER XII

CAMP GROUNDS

REGULATION 1. Scope

The regulations in this Chapter shall apply to any city, county, city-county, county-state, village, community, institution, person, firm or corporation operating, maintaining or offering for public use with Maricopa County any tract of land on which persons may camp or picnic either free of charge or by payment of a fee. Each and every owner and lessee of any public camp or picnic ground shall be held responsible for full compliance with these regulations.

REGULATION 2. Supervision

a. The management of every public camp or picnic ground shall assume responsibility for maintaining in good repair all sanitary appliances on said ground and shall promptly bring such action as may be necessary to prosecute or eject from such ground any person who willfully or maliciously damages such appliances or any person who in any way fails to comply with these regulations.

b. At least one caretaker shall be employed by the management to visit said camp or picnic ground every day that campers or picnickers occupy said ground. Such caretaker shall do whatever may be necessary to keep said ground and its equipment in a clean and sanitary condition.

c. Each camping party shall be allotted usable space of not less than 350 square feet.

REGULATION 3. Water Supply

a. The water supply system shall be in accordance with Chapter V of this Code and shall be provided in ample quantity to meet all requirements of the maximum number of persons using such ground at any time. Said water supply shall be easily obtained from its source or on a pipe distribution system, from faucets which shall be located not more than 300 feet from a camp or picnic spot within such ground. If water supply is obtained direct from above ground source, said source must be covered properly and water withdrawn by means of open pipe or faucet as approved by the Department. In no case can dipping from open springs, seeps or wells be permitted.

b. Any water considered unsafe for human consumption in the vicinity of such ground, to which campers or picnickers may have access, shall be either eliminated or purified, or shall be kept posted with placards definitely warning persons against its use.

REGULATION 4. Protection against fires

No fires shall at any time be so located as to endanger automobiles or other property in the camp ground. No fires shall be left unattended at any time, and all fires shall be completely extinguished before leaving.

REGULATION 5. Sewage and Refuse Disposal

a. Supervision and equipment: Supervision and equipment sufficient to prevent littering of the ground with rubbish, garbage or other refuse shall be provided and maintained. Fly-tight depositories for such materials shall be provided and conspicuously located. Each and every camp or picnic spot on said ground shall be within a distance of not over 200 feet from such a depository. These depositories shall not be permitted to become foul smelling or unsightly or breeding places for flies.

b. The method of final sewage or refuse disposal utilized in connection with the operation of any camp or picnic ground shall be such as to create no nuisance.

c. Basins: A sufficient number of basins, iron hoppers or sinks shall be provided and each shall be collected with a sewerage system; these are to be used for the disposal of domestic waste waters.

REGULATION 6. Toilets

Fly-tight privies or water-flushed toilets shall be provided and shall be maintained in a clean and sanitary condition. Separate toilets for men and women shall be provided, one for each 25 men, and one for each 25 women, or fraction thereof, of the maximum number of persons occupying such ground at any time. No camp or picnic spot within such ground shall be at a greater distance than 400 feet from both a women's and men's toilet. The location of all toilets shall be plainly indicated by signs.

REGULATION 7. Permit Required

No campground shall be operated or maintained in Maricopa County without a permit in force by the Department.

MARICOPA COUNTY ENVIRONMENTAL HEALTH CODE

CHAPTER XIII

SCHOOLS

SECTION 1

REGULATION 1. Schools

a. The following provisions of the Arizona Administrative Code ("A.A.C."), including all revisions, technical corrections, and supplements published as of March 31, 2010 are incorporated by reference:

Title 9, Chapter 8, Sections 701 through 711

b. The A.A.C. rules adopted by reference in Subsection a. include no future editions or amendments.

c. Copies of the above-described A.A.C. rules adopted by reference herein are available from the Arizona Secretary of State.

d. For the purpose of this code, references to "Department" in Title 9, Chapter 8, means the Maricopa County Environmental Services Department.

REGULATION 2. Plans Submitted

a. No school shall be constructed, nor shall any major alteration or addition be made thereto, until detailed plans and specifications for the premises have been submitted to and approved by the Department; nor shall any construction, alteration, or addition be made except in accordance with approved plans and specifications. The owner, operator, or his authorized agent shall certify in writing that the plan documents comply with these regulations.

B. The approval shall expire at the end of one year unless the project contemplated in the approved plans is substantially under construction by that time.

C. Should it be necessary or desirable to make any material change in the approved plans and specifications, revised plans and specifications shall be submitted to the Department for review, and approval shall be obtained before the work affected by the change is undertaken. Structural changes or minor revisions not affecting health and sanitation will be permitted during construction without further approval.

REGULATION 3. Permit Required

No person shall operate a school without a valid permit to do so from the Department, or other than in compliance with this code and any other applicable State or County regulation. The permit shall be posted in a conspicuous place on the premises of the establishment.

MARICOPA COUNTY ENVIRONMENTAL HEALTH CODE

CHAPTER XIV

INDOOR PLAY AREA

SECTION 1

REGULATION 1. Definitions

a. "Indoor Play Area" is defined as any indoor play components (manufactured or natural), designed and constructed for children including but not limited to ground level and elevated play structures, such as tunnels, slides, platforms, ladders, stairs, steps, nets, ropes, inflatables, trampolines, webbing, accessories and other soft contained play equipment.

REGULATION 2. Applicability

This chapter is applicable to an Indoor Play Area on the premises of a permitted Food Establishment as defined in Chapter VIII Section 1 of this Code when the primary function of the business or facility is food service to the general public.

REGULATION 3. Hand Sanitizer Required

a. A permanent sign shall be posted that is clearly visible to the public from the Indoor Play Area. The sign shall state that customers are prohibited from taking food into, or eating food on structures in the Indoor Play Area.

b. An affixed station or kiosk with instant hand sanitizer or sanitized hand wipes must be provided within the immediate vicinity of the indoor play area.

REGULATION 4. Cleaning

a. Indoor Play Area surfaces that have come in contact with users shall be cleaned of visible soil as often as necessary, but not less than once per day, unless the Indoor Play Area has not been in use. The food establishment shall maintain equipment in a clean condition free of visible soil.

b. The food establishment shall use an aqueous cleaning solution of proper strength consistent with the required cleaning solution for other parts of the food establishment non-food contact surfaces of equipment, or any other cleaning method/chemical as approved by the Department. Chemicals used for cleaning and sanitizing of the Indoor Play Area surfaces must be used in accordance with manufacturer's recommendations.

c. The food establishment shall adopt procedures for employees to follow when responding to vomiting or diarrheal events that involve the discharge of vomitus or fecal matter onto surfaces of or in the vicinity of the Indoor Play Area. The procedures shall address the specific actions that employees must take to minimize the spread of contamination and the exposure of employees, consumers, food and surfaces to vomitus or fecal matter.

d. Items used in maintaining and cleaning of Indoor Play Area surfaces shall be labeled play area use and must be properly cleaned and sanitized prior to using those same items to clean food equipment, food contact surfaces or food preparation areas.