SERIAL 01134 RFP FOOD RETHERMALIZATION SYSTEM

DATE OF LAST REVISION: February 18, 2009 **CONTRACT END DATE: July 31, 2012**

CONTRACT PERIOD THROUGH **JULY 31, 2012** ~~JULY 31, 2007~~ ~~JUNE 30, 2007~~

TO: All Departments

FROM: Department of Materials Management

SUBJECT: Contract for **FOOD RETHERMALIZATION SYSTEM**

Attached to this letter is published an effective purchasing contract for products and/or services to be supplied to Maricopa County activities as awarded by Maricopa County on **JUNE 26, 2002.**

All purchases of products and/or services listed on the attached pages of this letter are to be obtained from the vendor holding the contract. Individuals are responsible to the vendor for purchases made outside of contracts. The contract period is indicated above.

_____
Wes Baysinger, Director
Materials Management

MB/mm
Attach

Copy to: Materials Management
James Foley, FMD
Amie Bristol, MCSO Procurement

1.0 **INTENT:**

The intent of this Request for Proposal (RFP) is to purchase a food rethermalization system delivered and installed based on Maricopa County's requirements as described herein. The food rethermalization system, hereafter referred to as the Retherm System, will be comprised of a docking station, mobile transport cart, and food trays for use in adult and juvenile detention settings within Maricopa County. All components of the Retherm System will be designed to meet the needs of Maricopa County and will be the responsibility of the Retherm System manufacturer to design, manufacture, supply, and install.

1.1 OVERVIEW OF RETHERM SYSTEM:

1.1.1 The Retherm System is a cool/reheat/delivery system specifically designed, engineered, and manufactured to meet the needs of Maricopa County for meal service to the adult and juvenile detention population. The Retherm System has three major components: (1) the docking station, which performs cooling and heating of the food; (2) the mobile transport cart, in which the food trays are transported, as well as reheated/refrigerated at the docking station; and (3) the food trays, which are a custom single tray design. This single tray occupies both the hot and cold side of the cart simultaneously.

1.1.2 The food is prepared at the Central Services Food Factory through a partially automated process. The trays start at one end of a conveyor system and as they proceed, they are filled either by automated overhead hoppers or manually. The trays are then automatically shrink-wrapped and manually placed into carts. Following placement of the trays into the carts, they are stored in a cooler prior to transport on refrigerated trucks to the designated facility. Upon arrival at each facility, the carts go into a cooler until they are manually transported to one of the retherm docking stations located throughout the facility. They will be kept refrigerated at the docking stations until approximately one-hour before the meals are to be served. At that time the hot side of the docking station unit starts heating while continuing to keep the cold side chilled. Once the designated retherm time has been met, the food is removed from the carts and served.

1.1.3 Following meal service, the dirty trays are loaded into the carts and transported by refrigerated trucks back to the Central Services Food Factory for tray and cart washing.

1.2 SCOPE OF WORK:

1.2.1 The Technical proposals submitted in response to this RFP will be evaluated as described herein. After evaluation by Maricopa County, those manufacturers meeting the evaluation criteria based on their score will be requested to manufacturer, deliver, and install one Retherm System for testing and evaluation by the County. During the testing and evaluation process the County may hold discussions with the manufacturers and may request changes from the manufacturers to their Retherm System. During discussions, the County will not disclose any information derived from the technical proposals to any other manufacturer.

1.2.2 The manufacturers whose proposals have been accepted after being submitted and evaluated will provide a Retherm System unit for testing as part of the evaluation process. After the successful manufacturer has been selected, the remaining manufacturers will be reimbursed $10,000 and will be responsible for removing their Retherm System test unit.

1.2.3 See Exhibit 6 for the number of Retherm System component count per location.

1.2.4 No tax shall be levied against labor. Bid pricing to include all labor, overhead, tools, equipment andprofit,

2.0 **RETHERM SYSTEM MINIMUM REQUIREMENTS:**

The docking station and cart shall be sized to allow trouble-free transportation throughout facilityall facilities listed in Exhibit 6, from the point of delivery to the point of use (see the RTR drawings in Exhibit 5 for the routes the Retherm units will be following). It will also be sized to allow passage of other types of mobile carts, as listed in 'Exhibit 4, in the retherm pantry rooms when docked together.
It is the responsibility of the manufacturer to review facility architectural plans, see Exhibit 5, to determine the maximum allowable size for both the docking station and the transport cart. Consideration must also be given to the number of docking stations and transport carts that may at any given time be in coolers, loading docks, pantries, or in dining facilities. Manufacturers shall consider possible limitations by any of the peripheral equipment such as the automated cart washing equipment. See Exhibit 5 for location of 'Cart Washing' equipment specifications under 'Central Services'.

2.1 DOCKING STATION GENERAL:

2.1.1 The exterior and interior will be equal to or better than Type 304 stainless steel. Manufacturer to use the heaviest gauge feasible in the manufacturing process and to indicate the gauges used.

2.1.2 Design and construction shall withstand the abuse within a detention environment, meeting ACFSA Standards for Correction Environment security and durability.

2.1.3 The exterior shall be designed with rounded corners and the interior shall have radius internal corners.

2.1.4 Any non-welded component shall be attached with correctional fasteners, removable only with special tool.

2.1.5 All visible welds shall be ground and polished to blend with adjacent surfaces.

2.1.6 Sufficient insulation shall be provided to meet cooling and heating requirements.

2.1.7 Mechanical and electrical components shall only be accessible using special tools, and/or locking panels shall be provided for anti-tampering security.

2.1.8 Surfaces shall be easily cleaned using common methods and materials.

2.1.9 All electrical and electronic components, which cannot be cleaned with a hot water hose or in a cart wash, shall be capable of being manually cleaned and sanitized.

2.1.10 The interior and exterior surfaces shall be capable of being cleaned with normal stainless steel cleaning methods; meeting the requirements of the Hazard Analysis Critical Control Points (HACCP)-compliant process.

2.1.11 UL safety requirements and NSF requirements shall be met.

2.1.12 The heating side of the interior shall be marked with red color indicators. Method of marking to be determined by Maricopa County and the manufacturer.

2.1.13 Air movement shall be sufficient to maintain uniform cold and hot temperatures.

2.1.14 Airflow shall be directed uniformly over all trays.

2.1.15 Any mechanical means of directing air that may require removal for any reason, such as baffles, shall be installed with security fasteners requiring a special tool for removal.

2.1.16 Capability shall be provided for the rethermalization of two back-to-back meals at any given time.

2.1.17 Capability shall be provided to hold foods chilled for 16 hours continuously. Automatic or programmable defrost cycles must compensate for unit running continuously for long periods of time.

2.1.18 Docking Station shall have the capability to be anchored to the floor and/or wall with tamper proof fasteners that are also easily accessible and removable.

2.2 DOCKING STATION HEATING:

2.2.1 Food is to be heated to a maximum temperature of 275º F (air temperature) and brought down to a holding temperature of 180º F. The rethermalization period is not to exceed (60) sixty minutes for any meal. Food temperature to rise rapidly through the danger zone (40° F – 140° F) as per HACCP requirements.

2.2.2 Heaters shall be furnished with digital temperature controllers.

2.3 DOCKING STATION REFRIGERATION:

2.3.1 The Retherm Docking Station shall maintain food between 32º F and 38º F on both the hot and cold sides during the cold cycle. During the rethermalization cycle of the hot side a temperature of between 32º F and 38º F shall be maintained on the cold side.

2.3.2 A condensate pan, which does not require a drain, shall be provided.

2.3.3 Noise generated from the cooling mechanisms shall not exceed 65 dba.

2.3.4 Heat transfer shall be handled through means of a water-cooled self contained compressor. Water system is a chilled water closed loop system.

2.3.5 The cooling side of the interior shall be marked with blue color indicators. Method of marking to be determined by Maricopa County and the manufacturer.

2.3.6 Refrigeration unit and blowers shall be of a modular design and be easily accessible to enable the unit to be removed and replaced within a short period of time and with minimal connections.
Refrigeration unit and blowers shall be of a modular design in that the refrigeration unit and it's peripheral equipment (coils, blowers, etc.) can be pulled out together as unit for maintenance and/or replacement.

2.3.7 Refrigeration system shall be designed to operate in an environment with an average ambient temperature not to exceed 90 degrees.

2.4 DOCKING STATION ELECTRICAL:

2.4.1 The docking station shall operate on a 480-volt, three- (3) phase, 60-hertz electrical supply.

2.4.2 The Retherm System electrical requirements shall not exceed 30 amps.

2.4.3 Electrical connections shall be hard wired to power source.

2.4.4 Docking station shall be UL listed.

2.5 DOCKING STATION AND CART CONTROLS:

2.5.1 Each retherm docking station shall be provided with a computerized control panel with locking Lexan cover.

2.5.2 The Manufacture is to provide a computer system to monitor food transport carts internal temperature from the time its leaves the Central Services Kitchen to the time the cart is docked at the retherm docking station. The monitoring period shall be a minimum of 48 hours from the time the cart leaves the Central Services Kitchen. The data shall be down loadable to the County's WAN TCP IP network and run on Windows 98 or Windows NT.

2.5.2.1 The data is to insure that the transport carts temperature has not violated health standards for food prior to rethermalization. All data will be maintained at the Central Services Kitchen.

2.5.2.2 The docking station shall have a visual and audible alarm, which gives notification if temperatures within the cart have violated health standards.

2.5.2.3 Voice and data lines to the PC by others.

2.5.2.4 Provision shall be made for HACCP recording of time in relation to operating temperatures with food temperature monitor.

2.5.2.5 Manufacturer to submit an Additional Cost (Attachment A) to furnish and install the necessary computer hardware, software, and peripheral equipment necessary to monitor and retrieve data as described above from all remote sites to the main Central Services Kitchen site. The software and the source code to be in escrow for Maricopa County by the Retherm System manufacturer and/or the software manufacturer.

Cost to include software maintenance and upgrades for the length of the contract.

2.5.3 Docking Station timer shall be programmable with variable - cycle length, cycle time, temperature settings (hot and cold), optional hold cycle, audible alarms.

2.5.3.1 This function shall be computerized and controlled and monitored from the docking station and a remote site (Central Services Kitchen). The data shall be down loadable to the County's WAN TCP IP network and run on Windows 98 or Windows NT.

2.5.3.2 Manufacturer to submit an Additional Cost (Attachment A) to furnish and install the necessary computer hardware, software, and peripheral equipment necessary to monitor and retrieve data as described above from all remote sites to the main Central Services Kitchen site

Cost to include software maintenance and upgrades for the length of the contract.

2.5.4 The Control Panel shall be located on the front face of the module body. The face of the docking station will have the following items easily visible from the exterior of the unit.

2.5.4.1 Refrigeration temperature display (activated at all times that a cart is present) and retherm temperature display when rethermalization is in progress.

2.5.4.2 Rethermalization cycle count down.

2.5.4.3 Master ON/OFF switch with green indicator light.

2.5.4.4 Locking manual rethermalization activation override for breakfast, lunch, & dinner, and boost cycle buttons.

2.5.4.5 Indicator lights shall denote.

2.5.4.5.1 Ready (to serve) - Audible signal shall co-function with the 'Ready' light and the digital Readout 'Serve'.

2.5.4.5.2 Retherm-in-Process.

2.5.4.5.3 Program Mode. (Security code entry only).

2.6 TRANSPORT CART:

2.6.1 The exterior and interior shall be equal to or better than Type 304 stainless steel. Manufacturer to use the heaviest gauge feasible in the manufacturing process and to indicate the gauges used.

2.6.2 Cart shall be constructed with welded frame of stainless steel uprights, crossbars, top and bottom supports.

2.6.3 Cart shall be designed and constructed to withstand the abuse within a detention environment, meeting ACFSA Standards for Correction Environment security and durability.

2.6.4 The exterior shall be designed with rounded corners and the interior shall have radius internal corners.

2.6.5 Any non-welded component shall be attached with correctional fasteners, removable only with special tool.

2.6.6 All visible welds shall be ground and polished to blend with adjacent surfaces.

2.6.7 Sufficient insulation shall be provided to maintain a cold temperature of less than 45º F in the cold side and a hot temperature of 145º F in the hot side when not connected to the docking station for a period of 45 minutes in an average ambient environment of 90 degrees.

2.6.8 Mechanical components shall be accessible using special tools.

2.6.9 All governing requirements for sanitation, including NSF and HACCP or equivalent listing/certification for sanitation and ACA regulations shall be met. HACCP regulations take precedent over ACA regulations.

2.6.10 A 40-tray capacity shall be provided with adequate spacing between the trays for proper air circulation.

2.6.11 Two vertical push-handles shall be mounted on the swivel caster end of the cart, spaced for easy grasping at any height. Handles shall be mechanically fastened so they may be easily replaced in case of damage. Handles not to extend beyond the cart's bumpers.

2.6.12 There shall be highly efficient temperature barriers (up to 300º F) to separate the heated and refrigerated compartments.

2.6.13 There must be provided a means to prevent temperature migration between hot and cold sections in the event that there are no trays or partial trays present on any level. Because of inmate involvement, this must be accomplished by means other than providing a spacer to be inserted.

2.6.14 The force required for one person to move a fully loaded cart on a level surface, with the cart handle at waist level and a distance of 25+ feet, shall not exceed an initial force of 55 lbs. and a sustained force of 33 lbs.

2.6.15 The cart shall be easily cleaned by means of an automatic cart wash machine. See Exhibit 5 and look for cart wash specifications under 'Central Services'.

2.6.16 The interior of the cart shall have a means of providing a backstop to secure the trays in position for rethermalization and still allow optimum airflow throughout the cart.

2.6.17 Cart shall provide a means of supporting the food tray without breaking the shrink-wrap film heat seal.

2.6.18 The top of the exterior of the cart shall have a horizontal identification system with provision of large print (approximately 5”x7”) that may display ward numbers, pod number, or building designation. The ID system shall have the ability to be changed for each meal.

2.6.19 Cart dimensions shall be such that at least three carts can be placed side-by-side within a standard 96” wide- transportation trailer opening.

2.7 TRANSPORT CART DOORS:

2.7.1 There shall be one door on each end of the cart.

2.7.2 Doors shall be able to fold back 270º against the cart.

2.7.3 Doors shall be double-wall with insulation.

2.7.4 Each door shall be mounted on at least two (2) heavy-duty tamper resistant removable hinges.

2.7.5 Die-formed, recessed pull-handles shall be on each door

2.7.6 Security of door closure shall be provided by top-mounted gravity transport latch with pad-locking feature.

2.7.7 Doors are to be provided with an internal extruded vinyl perimeter gasket.

2.7.8 The center closure of the doors shall provide a gasket effect to meet with the temperature barriers of the Retherm tray.

2.7.9 Doors are to be fitted with interchangeable thermal gaskets that are easily replaced.

2.8 TRANSPORT CART CASTERS:

2.8.1 Caster housing shall be heavy-duty Type 304 stainless steel. with ball bearings and zerk fittings. Caster wheel to be made of a non-marking solid rubber type of material with round tread and a minimum diameter modulus of 6 inches.

2.8.2 Cushion wheels shall be non-marking solid rubber. Two casters shall be rigid and two shall be swivel with brakes.

2.8.3 Casters shall be removable by means of a special tool with the connections easily accessible.

2.9 TRANSPORT CART BUMPERS:

2.9.1 The cart shall be provided with extruded, non-marking, vinyl bumpers, around the complete perimeter, attached to a heavy-duty channel extrusion, with the channel securely attached to the cart base.

2.10 TRAYS GENERAL:

2.10.1 Trays must have a one- (1) year warranty based on an average normal use of once per day.

2.10.2 Manufacturer will identify in Technical Proposal the delivery time to produce the initial 3,000 trays.

2.10.3 Manufacturer will provide Maricopa County with a production time for additional tray orders based on quantities of 1,000, 5,000, and 10,000.

2.10.4 Manufacturer shall select the best material to meet the specifications and provide the technical specifications on the tray material.

2.10.5 All governing requirements for sanitation, including NSF and HACCP or equivalent listing/certification for sanitation and ACA regulations shall be met.

2.10.6 Manufacturer to coordinate with tray washing manufacturer to accommodate complete drying.

2.10.7 See Exhibit 3 for tray dimensions and configuration.

2.11 TRAY MATERIAL:

2.11.1 The food tray shall be a permanent type, designed to withstand temperatures up to 300º Fahrenheit and as low as **28-30°** Fahrenheit.

2.11.2 Tray shall be designed for use in a detention environment and not be able to be damaged to the point of shattering and/or splintering to allow it to be used as a weapon.

2.11.3 Tray shall be capable of withstanding 180º F for two continuous hours.

2.11.4 Tray shall be capable of being heated to 275º F on one side and maintain a cold temperature of between 32º F and 38º F on the other side at the same time with minimal warping, so as not to affect the performance of the system.

2.11.5 Tray shall be non-toxic.

2.11.6 "Not Used"

2.11.7 The letter 'C', for cold, shall be engraved on one side of the tray cavity so it can be seen from the side when installed in the cart.

2.11.8 Tray shall meet all governing Federal, State, Correctional, and local codes regarding food preparation and distribution.

2.11.9 Manufacturer will provide the County with alternates on the tray material as a means of comparing material vs. material cost vs. life of tray, and washing and drying requirements.

2.12 RETHERM SYSTEM INSTALLATION:

2.12.1 Manufacturer is responsible for the installation of the Retherm System and in doing so shall provide specifications, supervision and coordination necessary for the installation to Maricopa County and their General Contractor(s).

2.12.2 Installer(s) shall be experienced to perform work, having specialized in installing food service equipment, completed installations similar in design and extent to that indicated for this project and who have a record of successful performance. Installer(s) shall also be licensed to perform work in the State of Arizona.

2.12.3 Manufacturer shall coordinate equipment layout and installation with other work.

2.12.4 Manufacturer shall coordinate location and requirements of service-utility connections with Maricopa County and their representative.

2.12.5 General contractor is responsible for supplying all necessary electrical and mechanical components to the wall to allow Retherm installers to make their final connections. This includes the electrical J-Boxes for power and water valves at the chilled water lines.

2.13 QUALITY ASSURANCE:

2.13.1 Manufacturer must be a firm experienced in manufacturing food service equipment similar to that indicated for this Project and with a record of successful in-service performance.

2.13.2 Equipment must comply with all governing Federal, State, Correctional, and local codes.

2.13.3 All seams and fit joints are to be held to a tight tolerance to provide a minimum weld.

2.13.4 All seams and joints shall be heliarc welded.

2.13.5 All sheet metal shall be equal to or better than type 304 stainless steel.

2.13.6 All welds and joint preparations shall be designed in a manner that will give the final weld the utmost strength and durability.

2.13.7 All welds shall be ground and polished and grains to be matched with unwelded material.

2.13.8 Tooling containing carbon steel material, or tooling used to grind/polish carbon steel shall not be used.

2.13.9 Only stainless steel metal parts shall be used in the manufacturing of this equipment.

2.14 DATA INFORMATION, INSTALLATION & SHOP DRAWINGS:

2.14.1 Manufacturer shall submit product data on the Retherm System and its components with their proposal. The following specifications shall be included: maintenance clearances, water supply (if required), drainage (if required), electrical power and service connections including rough-in dimensions.

2.14.2 Manufacturer shall submit shop drawings on the Retherm System components within four weeks after the contract is awarded. Plans, elevations, sections, rough-in dimensions, fabrication details, service requirements and attachments to other work shall be provided.

2.14.3 Wiring diagrams shall include details of wiring for power, signal and control systems. Differentiate between manufacturer installed and field-installed wiring.

2.14.4 Manufacturer to coordinate with Maricopa County Sheriff's Office on hardware interface and software compatibility.

2.14.5 Maintenance manuals shall be provided after the contract has been awarded and at time of delivery and installation. They shall include maintenance data, including operation, maintenance and parts data.

2.15 DELIVERY, STORAGE, AND HANDLING:

2.15.1 Food service equipment shall be delivered as factory assembled units with protective covering.

2.15.2 Food service equipment shall be stored in original protective covering and in dry location until installed.

2.16 WARRANTY PERIOD**:**

The Retherm System shall carry a three-year warranty, including parts & labor, on materials and workmanship and a five-year warranty on the compressor. Compressor will be located within

conditioned air space not to exceed 90 degrees. The warranty shall include all preventive maintenance. Manufacturer to state their standard response time to warranty repair issues.

The manufacturer shall provide a local vendor to service and maintain the Retherm System equipment and who shall respond within the manufacturer's standard response time. This Request For Proposal provides an opportunity to give an Alternate Price (Attachment A) on the following response times; 4 hours, 8 hours, 12 hours, 24 hours.

The manufacturer shall provide support and training to the local service vendor.

Manufacturer shall provide operations training to County staff and shall video this training for future use.

Manufacturer shall provide all installation and operation manuals

SECURITY BACKGROUND CHECKS

Prior to access to the any jail complex buildings by Vendor a "Maricopa County Sheriff's Office Application For Courtesy Identification Form" shall be completed so that a Criminal History/Records Check and Warrants Check of personnel can be carried out. On completion of a satisfactory security background check, a "Courtesy Identification Card" will be issued. The type and color of the Identification Cards will be determined by the Jail facility. The County shall be immediately notified of the loss of an Identification Card.

FACILITY ENTRY/EXIT REQUIREMENTS

Entry into and exit from these buildings will be coordinated with the County prior to the commencement of any work.

Weapons, drugs and alcohol cannot be brought onto County property or into any Jail Facility.

All tools brought into the Jail complex must be inventoried and secured by the Vendor before entering and departing these buildings. This inventory will be available to the County and Building Security personnel upon request. Any tools left unsecured will become the property of Owner.

Tools that are not being used must be kept in secured containers or within the immediate reach and control of the Vendor.

Vendor must immediately report any losses or unexplained damages to equipment to the Program Manager while on the Durango Jail complex.

The Vendor will not talk to or interact with any inmates/detainees for any reason.

KEYS

Keys will not be left in any vehicle or piece of equipment that is left unattended. If a key is not required to start any vehicle or piece of equipment, that vehicle or equipment will be disabled so that an inmate/detainee will not be able to start it if it is not in the immediate control of a the Vendor.

2.17 POST-WARRANTY PERIOD:

2.17.1 Manufacturer shall provide cost for a yearly-extended warranty agreement, including parts and labor, response time as per original warranty period, and shall include all preventive maintenance.

3.0 **SPECIAL TERMS & CONDITIONS:**

3.1 CONTRACT LENGTH:

This Request for Proposals is for awarding a firm fixed price contract to cover a (5) year period.

3.2 OPTION TO EXTEND:

The County may, at their option and with the approval of the Contractor, extend the period of this agreement with one (5) year option. The Contractor shall be notified in writing by the Materials Management Department of the County's intention to extend the contract period at least thirty (30) calendar days prior to the expiration of the original contract period.

3.3 INDEMNIFICATION AND INSURANCE:

3.3.1 Indemnification.

3.3.1.1 To the fullest extent permitted by law, Contractor shall defend, indemnify, and hold harmless the County, its agents, representatives, officers, directors, officials, and employees from and against all claims, damages, losses and expenses, including but not limited to attorney fees and costs, relating to this Contract.

3.3.1.2 The amount and type of insurance coverage requirements set forth herein will in no way be construed as limiting the scope of the indemnity in this paragraph.

3.3.1.3 The scope of this indemnification does not extend to the negligence of the County.

3.3.2 Insurance Requirements:

3.3.2.1 Contractor, at its own expense, shall purchase and maintain the herein stipulated minimum insurance with companies duly licensed, possessing a current A.M. Best, Inc. Rating of B++6, or approved unlicensed companies in the State of Arizona with policies and forms satisfactory to the County.

3.3.2.2 All insurance required herein shall be maintained in full force and effect until all work or service required to be performed under the terms of the Contract is satisfactorily completed and formally accepted. Failure to do so may, at the sole discretion of the County, constitute a material breach of this Contract.

3.3.2.3 The Contractor’s insurance shall be primary insurance as respects the County, and any insurance or self-insurance maintained by the County shall not contribute to it.

3.3.2.4 Any failure to comply with the claim reporting provisions of the insurance policies or any breach of an insurance policy warranty shall not affect coverage afforded under the insurance policies to protect the County.

3.3.3 Commercial General Liability.

The Contractor shall be solely responsible for the deductible and/or self-insured retention and the County, at its option, may require the Contractor to secure payment of such deductibles or self-insured retentions by a surety bond or an irrevocable and unconditional letter of credit.

3.3.3.1 The County reserves the right to request and to receive, within ten (10) working days, certified copies of any or all of the herein required insurance policies and/or endorsements. The County shall not be obligated, however, to review such policies and/or endorsements or to advise Contractor of any deficiencies in such policies and endorsements, and such receipt shall not relieve Contractor from, or be deemed a waiver of the County’s right to insist on strict fulfillment of Contractor’s obligations under this Contract.

3.3.3.2 The insurance policies required by this Contract, except Workers' Compensation, shall name the County, its agents, representatives, officers, directors, officials and employees as Additional Insureds.

3.3.3.3 The insurance policies required hereunder, except Workers' Compensation, shall contain a waiver of transfer of rights of recovery (subrogation) against the County, its agents, representatives, officers, directors, officials and employees for any claims arising out of Contractor's work or service.

3.3.3.4 Commercial_General_Liability. Contractor shall maintain Commercial General Liability insurance with a limit of not less than $1,000,000 for each occurrence with a $2,000,000 Products/Completed Operations Aggregate and a $2,000,000 General Aggregate Limit. The policy shall include coverage for bodily injury, broad form property damage, personal injury, products and completed operations and blanket contractual coverage including, but not limited to, the liability assumed under the indemnification provisions of this Contract which coverage will be at least as broad as Insurance Service Office, Inc. Policy Form CG 00 01 10 93 or any replacements thereof.

3.3.3.4.1 The policy shall contain a severability of interest provision, and shall not contain a sunset provision or commutation clause, or any provision, which would serve to limit third party action over claims.

3.3.3.4.2 The Commercial General Liability additional insured endorsement shall be at least as broad as the Insurance Service Office, Inc.'s Additional Insured, Form CG 20 10 11 85, and shall include coverage for Contractor's operations and products and completed operations.

3.3.3.4.3 If the Contractor subcontracts any part of the work, services or operations awarded to the Contractor, Contractor shall purchase and maintain, at all times during prosecution of the work, services or operations under this Contract, an Owner's and Contractor's Protective Liability insurance policy for bodily injury and property damage, including death, which may arise in the performance of the Contractor's work, service or operations under this Contract. Coverage shall be on an occurrence basis with a limit not less than $1,000,000 per occurrence, and the policy shall be issued by the same insurance company that issues the Contractor's Commercial General Liability insurance.

3.3.3.5 Automobile Liability. Contractor shall maintain Automobile Liability insurance with an individual single limit for bodily injury and property damage of no less than $1,000,000, each occurrence, with respect to Contractor's vehicles (whether owned, hired, non-owned), assigned to or used in the performance of this Contract.

3.3.3.6 Workers' Compensation. The Contractor shall carry Workers' Compensation insurance to cover obligations imposed by federal and state statutes having jurisdiction of Contractor's employees engaged in the performance of the work or services, as well as Employer's Liability insurance of not less than $1,000,000 for each accident, $1,000,000 disease for each employee, and $1,000,000 disease policy limit.

3.3.3.6.1 If any work is subcontracted, the Contractor will require Subcontractor to provide Workers' Compensation and Employer's Liability insurance to at least the same extent as required of the Contractor.

3.3.4 Certificates of Insurance.

3.3.4.1 Prior to commencing work or materials under this Contract, CONTRACTOR shall furnish the COUNTY with Certificates of Insurance, or formal endorsements as required by the Contract in the form provided by the County, issued by CONTRACTOR'S insurer(s), as evidence that policies providing the required coverage, conditions and limits required by this Contract are in full force and effect. Such certificates shall identify this contract number and title.

3.3.4.2 In the event any insurance policy (ies) required by this Contract is (are) written on a "claims made" basis, coverage shall extend for two years past completion and acceptance of the CONTRACTOR'S work or materials and as evidenced by annual Certificates of Insurance.

3.3.4.3 If a policy does expire during the life of the Contract, a renewal certificate must be sent to the COUNTY fifteen (15) days prior to the expiration date.

3.3.5 Cancellation and Expiration Notice.

3.3.5.1 Insurance required herein shall not expire, be canceled, or materially changed without thirty- (30) days prior written notice to the COUNTY.

3.4 REQUIREMENT OF CONTRACT BONDS:

Concurrently with the submittal of the Contract, the Contractor shall furnish the Contracting Agency the following bonds, which shall become binding upon the award of the Contract to the Contractor.

(A) A Performance Bond in an amount equal to the full Contract amount (or as specified) conditioned upon the faithful performance of the Contract in accordance with plans, specifications and conditions thereof. Such bond shall be solely for the protection of the Contracting Agency awarding the Contract.

(B) ~~A Payment Bond in an amount equal to the full Contract amount solely for the protection of claimants supplying labor or materials to the Contractor or his Subcontractors in the prosecution of the work provided for in such contract~~.

~~Each such bond shall include a provision allowing the prevailing party in a suit on such bond to recover as a part of his judgment such reasonable attorney's fees as may be fixed by a judge of the court.~~

Payment Bond waived, per Procurement Consultant. Please see File memo.

Each such bond shall be executed by a surety company or companies holding a certificate of authority to transact surety business in the State of Arizona issued by the Director of the Department of Insurance. The bonds shall not be executed by an individual surety or sureties. The bonds shall be made payable and acceptable to the Contracting Agency. The bonds shall be written or countersigned by an authorized representative of the surety who is either a resident of the Sate of Arizona or whose principal office is maintained in this state, as by law required, and the bonds shall have attached thereto a certified copy of the Power of Attorney of the signing official. In addition, said company or companies shall be rated "Best-A" or better as required by the Contracting Agency, as currently listed in the most recent Best Key Rating Guide, published by the A.M. Best Company.

3.5 PERFORMANCE BOND:

The successful Contractor will be required to furnish a performance bond in an amount equal to the full Contract amount within 10 days from receipt of notification of award. Date of U.S. postmark will be accepted as date of delivery of performance bond. Contractors are requested to tender this bond on a Document approved by the Arizona Department of Insurance. Contractor failing to supply a performance bond as required will forfeit his right to the contract. An irrevocable letter of credit or certificate of deposit will be accepted in lieu of bond. Performance bonds are to be identified with PROPOSAL serial number, title and return address.

3.6 TESTING:

Unless otherwise specified, materials and equipment purchased will be inspected by the receiving activity as to meeting the quality and quantity requirements of the solicitation. When deemed necessary, samples of supplies or materials will be taken at random form stock received for submission to a commercial laboratory or other appropriate agency, for analysis and test as to whether the material conforms in all respects to the specifications. In cases where commercial laboratory reports indicate that the materials do not meet the specifications, the expense of such analysis is to be borne by the Proposer holding the contract.

3.7 TERMS AND PAYMENT:

Payment under contract will be made in the manner provided by law. Invoices shall be prepared and submitted in accordance with the instructions provided on the Purchase Order. Invoices shall contain the following information: Purchase Order number, item numbers, description of supplies and or/services, sizes, quantities, unit prices and extended totals and applicable sales/use tax. The County is not subject to excise tax.

3.8 ACCEPTANCE:

Upon successful completion of the performance period of 60 days from delivery, the system shall be deemed accepted and the warranty period begins. All documentation shall be completed prior to final acceptance.

3.9 TRAINING:

The successful Proposer shall provide a minimum of 40 hours to train County personnel in the use and care of the equipment.

3.10 TECHNICAL AND DESCRIPTIVE LITERATURE:

Proposer(s) must include complete manufacturer's technical and descriptive literature regarding the material they propose to provide. Literature shall be sufficient in detail in order to allow full and fair evaluation of the offer submitted. Failure to include this information may result in the PROPOSAL being rejected.

3.11 PROCUREMENT CARD ORDERING CAPABILITY:

It is the intent of Maricopa County to utilize the Bank of America MC Procurement Card or other procurement card that may be used by the County from time to time, to place and make payment for orders under this Contract. Proposers without this capability may be considered non-responsive and not eligible for award consideration.

Purchase Card Clarification.
Maricopa County's Bank of America Purchase Card program is based on the MasterCard charge card. There is no charge from Maricopa County for the program, any costs or charges to the vendor or contractor will be based on the transaction dollar amount and is from the Vendors/contractors servicing Bank. The vendor/contractor should contact their bank to arrange for the acceptance and information concerning any charges to use this program.
The advantages of accepting the purchase card for payment are as follows.

1. The bank pays the vendor/contractor in 48 to 72 hours versus 30 days from Maricopa County.
2. The vendor/contractor does not have to invoice Maricopa County.
3. The vendor/contractor does not have to carry that transaction in their account receivable.
   Maricopa County offers this opportunity only to vendors/contractors that are not 1099 reportable to the Internal Revenue Service. Maricopa County will be asking those vendors/contractors that are offered this opportunity to give the County a prompt payment discount.

3.12 PROMPT PAYMENT DISCOUNT:

Maricopa County, through its "Purchase Card Process" has initiated changes that are intended to both improve and expedite the purchasing and payment process. In light of these efforts, Proposers are strongly encouraged to offer Maricopa County prompt payment discounts for this service and take into consideration receipt of payment with seventy-two (72) hours from time of payment processing. Discounts offered will be considered in the evaluation price analysis process.

3.13 INTERNET ORDERING CAPABILITY:

It is the intent of Maricopa County to utilize the Internet to place orders under this price contract. Proposers without this capability may be considered non-responsive and not eligible for award consideration.

4.0 **CONTRACT TERMS AND CONDITIONS:**

4.1 LANGUAGE FOR REQUIREMENTS CONTRACTS:

Contractors signify their understanding and agreement by signing this document, that the Contract resulting from this proposal will be a requirements contract. However, this Contract does not guarantee that any purchases will be made. It only indicates that if purchases are made for the services contained in this Contract, that they would be purchased from the Contractor awarded that item. Orders will only be placed when a need is identified by a Using Agency or Department and proper authorization and documentation have been approved.

4.2 ESCALATION:

Any requests for **reasonable** price adjustments must be submitted **sixty (60)** ~~thirty (30)~~ days prior to the Contract **anniversary** ~~renewal~~ date. ~~Justification for the requested~~ **Requests for** adjustment in cost of labor and/or materials must be **supported** ~~accompanied~~ by appropriate documentation. **Upon agreement by the County to the adjusted price terms, the County shall issue written approval of the change** ~~Escalation shall not exceed the increase in the U.S. Department of Labor (Bureau of Labor Statistics) Consumer Price Index for Urban Consumers. Increases shall be approved in writing by the Materials Management Department~~ prior to any adjusted invoicing submitted for payment.

4.3 UNCONDITIONAL TERMINATION FOR CONVENIENCE:

Maricopa County may terminate the resultant Contract for convenience by providing sixty (60) calendar days advance notice to the Contractor.

4.4 DEFAULT:

The County may suspend, terminate, or modify this contract immediately upon written notice to the Contractor in the event of a nonperformance of stated objectives or other material breach of contractual obligations; or upon the happening of any event which would jeopardize the ability of the Contractor to perform any of its contractual obligations. Maricopa County reserves the right to have service provided by other than the Contractor if the Contractor is unable or fails to provide requested service within the specified time frame.

4.5 TERMINATION BY THE COUNTY:

If the Contractor should be adjudged bankrupt or should make a general assignment for the benefit of its creditors, or if, a receiver should be appointed on account of its insolvency, the County may terminate this Agreement. If the Contract should persistently or repeatedly refuse or should fail, except in cases for which extension of time is provided, to provide enough properly skilled workers or proper materials, or persistently disregard laws and ordinances, or not proceed with work or otherwise be guilty of, a substantial violation of any provision of this Agreement, then the County may terminate this Agreement. Prior to termination of this Agreement, the County shall give the

Contractor fifteen (15) calendar days written notice. Upon receipt of such termination notice, the Contractor shall be allowed fifteen (15) calendar days to cure such deficiencies.

4.6 APPROPRIATION CONTINGENCY:

The Contractor recognizes that any agreement entered into shall commence upon the day first provided and continued in full force and effect until termination in accordance with its provisions. The Contractor and the County herein recognize that the continuation of any contract after the close of any given fiscal year of the County, which fiscal years end on June 30 of each year, shall be subject to the approval of the budget of the County providing for or covering such contract item as an expenditure therein. The County does not represent that said budget item will be actually adopted, said determination being the determination of the County Board of Supervisors at the time of the adoption of the budget.

4.7 ORGANIZATION - EMPLOYMENT DISCLAIMER:

The Contract is not intended to constitute, create, give rise to or otherwise recognize a joint venture agreement or relationship, partnership or formal business organization of any kind, and the rights and obligations of the parties shall be only those expressly set forth in the Contract.

The parties agree that no persons supplied by the Contractor(s) in the performance of obligations under the agreement are considered to be County employees, and that no rights of County civil service, retirement or personnel rules accrue to such persons. The Contractor(s) shall have total responsibility for all salaries, wages, bonuses, retirement withholdings, workmen's compensation, other employee benefits and all taxes and premiums appurtenant thereto concerning such persons, and shall save and hold the County harmless with respect thereto.

4.8 STATUTORY RIGHT OF CANCELLATION FOR CONFLICT OF INTEREST:

Notice is given that pursuant to A.R.S. § 38-511 the County may cancel this Contract without penalty or further obligation within three years after execution of the contract, if any person significantly involved in initiating, negotiating, securing, drafting or creating the contract on behalf of the County is at any time while the Contract or any extension of the Contract is in effect, an employee or agent of any other party to the Contract in any capacity or consultant to any other party of the Contract with respect to the subject matter of the Contract. Additionally, pursuant to A.R.S. § 38-511 the County may recoup any fee or commission paid or due to any person significantly involved in initiating, negotiating, securing, drafting or creating the contract on behalf of the County from any other party to the contract arising as the result of the contract.

4.9 OFFSET FOR DAMAGES:

In addition to all other remedies at Law or Equity, the County may offset from any money due to the Contractor any amounts Contractor owes to the County for damages resulting from breach or deficiencies in performance under this Contract.

4.10 ADDITIONS/DELETIONS OF SERVICE:

The County reserves the right to add and/or delete services to this Contract. Should a service requirement be deleted, payment to the Contractor will be reduced proportionally, to the amount of service reduced in accordance with the PROPOSAL price. Should additional services be required from this Contract, prices for such additions will be negotiated between the Contractor and the County.

4.11 ASSIGNMENT OR SUBCONTRACTING:

Neither this Agreement, nor any portion thereof, may be assigned by Contractor without the written consent of the County first having been obtained. Any attempt by the Contractor to assign or

subcontract any performance of this Contract without the written consent of the County shall be null and void and shall constitute a breach of this Contract.

The Subcontractor's rate for the job shall not exceed that of the Prime Contractor's rate, as proposed in the pricing section, unless the Prime Contractor is willing to absorb any higher rates. The Subcontractor's invoice shall be invoiced directly to the Prime Contractor, who in turn shall pass-through the costs to the County, without mark-up. A copy of the Subcontractor's invoice must accompany the Prime Contractor's invoice.

4.12 AMENDMENTS:

All amendments to this Contract must be in writing and signed by both parties.

4.13 CONFORMATION WITH THE LAW:

This service shall be accomplished in conformity with the laws, ordinances, rules, regulations and zoning restrictions of the United States of America, the State of Arizona, County of Maricopa, and the City of Phoenix.

4.14 CONTRACT COMPLIANCE MONITORING:

The Materials Management Department and the Criminal Justice Facilities Development Department shall monitor the Contractors compliance with, and performance under, the terms and conditions of the Contract. The Contractor shall make available for inspection and/or copying by the County all records and accounts relating to the work performed or the services provided in this Contract.

4.15 RETENTION OF RECORDS:

The Contractor agrees to retain all financial books, records, and other documents relevant to this Contract for five (5) years after final payment or until after the resolution of any audit questions which could be more than five (5) years, whichever is longer. The Department, Federal or State auditors and any other persons duly authorized by the Department shall have full access to, and the right to examine, copy and make use of any and all said materials.

4.16 ADEQUACY OF RECORDS:

If the Contractor's books, records and other documents relevant to this Contract are not sufficient to support and document that allowable services were provided to eligible clients the Contractor shall reimburse Maricopa County for the services not so adequately supported and documented.

4.17 AUDIT DISALLOWANCES:

If at any time it is determined by the Department that a cost for which payment has been made is a disallowed cost, the Department shall notify the Contractor in writing of the disallowance and the required course of action, which shall be at the option of the Department either to adjust any future claim submitted by the Contractor by the amount of the disallowance or to require repayment of the disallowed amount by the Contractor forthwith issuing a check payable to Maricopa County.

4.18 P.O. CANCELLATION LANGUAGE:

The Department of Materials Management reserves the right to cancel Purchase Orders within a reasonable period of time after issuance. Should a Purchase Order be canceled, the County agrees to reimburse the Contractor but only for actual and documentable costs incurred by the Contractor due to and after issuance of the Purchase Order. The County will not reimburse the Contractor for any costs incurred after receipt of County notice of cancellation, or for lost profits, shipment of product prior to issuance of Purchase Order, etc. Contractors agree to accept verbal notification of cancellation from the Department of Materials Management with written notification to follow. By

submitting a proposal in response to this solicitation, the Contractor specifically acknowledges to be bound by this cancellation policy.

4.19 RIGHTS IN DATA:

The County shall have the use of data and reports resulting from this Contract without additional cost or other restriction except as may be established by law or applicable regulation. Each party shall supply to the other party, upon request, any available information that is relevant to this Contract and to the performance hereunder.

4.20 SECURITY AND PRIVACY:

The Contractor agrees that none of its officers or employees shall use or reveal any research or statistical information furnished by any person and identifiable to any specific private person for any purpose other than the purpose for which it was obtained. Copies of such information shall not, without the consent of the person furnishing such information, be admitted as evidence or used for any purpose in any action, suit, or other judicial or administrative proceedings, unless ordered by a court of competent jurisdiction. The County shall be notified immediately upon receipt of any such order of court, pertaining to production of such information.

The Contractor shall incorporate the foregoing provisions of this paragraph in all of its authorized Subcontracts.

4.21 SEVERABILITY:

Any provision of this Contract which is determined to be invalid, void, or illegal shall in no way affect, impair, or invalidate any other provision hereof, and remaining provisions shall remain in full force and effect.

4.22 VALIDITY:

The invalidity, in whole or in part, of any provision of this Agreement shall not void or affect the validity of any other provision of this Contract.

4.23 CONTRACTOR RESPONSIBILITY:

The Contractor will be responsible for any damages whatsoever to County property as applicable when such property is the responsibility or in the custody of the Contractor, his Employees or Subcontractors.

Contractor agrees that all Subcontractors performing work under this Contract shall comply with its provisions and it is expressly understood that all persons employed by the Contractor, either directly or indirectly, shall be considered employees of the Contractor, and not employees of Maricopa County.

Contractor acknowledges and agrees that it is liable and responsible for any act or omission by the Contractor, its employees, agents, officers, representatives, and subcontractors occurring in the course of Contractor's performance of this Contract, whether such act or omission occurs on County property or elsewhere. Contractor shall be liable for any loss or damage arising out of or related to Contractor's performance of this contract, Contractor shall bear the above stated liability, even in absence of its own negligence, unless County actions caused the loss or damage (i.e., if regulation, but damage occurs, Contractor is responsible for such damages.) Contractor shall bear the above stated liability, consequential, incidental, direct, and indirect damages, and shall be liable for all costs, including attorney's fees, incurred by the County to enforce this provision.

4.24 FAILURE TO PROVIDE SERVICES:

Maricopa County reserves the right to have service provided by other than the Contractor if the Contractor is unable or fails to provide requested service within the specified time frame.

4.25 DELIVERY:

It shall be the Contractor's responsibility to meet the County's delivery requirements, as called for in the Technical Specifications. Maricopa County reserves the right to obtain material on the open market in the event the Contractor fails to make delivery and any price differential will be charged against the Contractor.

4.26 PRICE REDUCTIONS:

By submitting a proposal in response to this solicitation, Contractors agree to guarantee that Maricopa County is receiving the lowest price offered by your company to other customers for similar services at comparable volumes in a similar geographic area**.** If at any time during the contract period your company offers a lower price to another customer, SIMILAR PRICES MUST BE EXTENDED TO MARICOPA COUNTY. If a notification is not made of said price reductions, upon discovery Maricopa County shall reserve the right to take any or all of the following actions:

4.26.1 Cancel the Contract, if it is currently in effect.

4.26.2 Determine the amount, which the County was overcharged and submit a request for payment from the Contractor for that amount.

4.26.3 Take the necessary steps to collect any performance surety provided on the applicable contract.

4.27 CHANGES:

The County may require changes in the scope of the services to be performed by the Contractor hereunder. All such changes, which are mutually agreed upon by and between all the parties, shall be incorporated in written amendments to this Contract. All such amendments shall state any increase or decrease in the amount of the compensation due to the Contractor for the change in scope.

4.28 EMPLOYEE RESPONSIBILITY:

No responsibility will attach to a county employee for the premature opening of a proposal not properly addressed and identified in accordance with the proposal documents.

BURLODGE USA INC., 3760 INDUSTRIAL DRIVE, WINSTON-SALEM, NC 27105
~~PO BOX 4088, 3760 INDUSTRIAL DRIVE, WINSTON-SALEM, NC 27115-4088~~

WILLING TO ACCEPT FUTURE SOLICITATIONS VIA EMAIL: __X___YES _____NO

ACCEPT PROCUREMENT CARD: __X___YES _____NO

REBATE (CASH OR CREDIT) FOR UTILIZING PROCUREMENT CARD: __X__YES ___NO__2__% REBATE

INTERNET ORDERING CAPABILITY: __X___YES _____NO

OTHER GOV'T. AGENCIES MAY USE THIS CONTRACT: ___X__YES _____NO

6.0 PRICING:

ITEM DESCRIPTION	QUANTITY	UNIT PRICE	EXT. PRICE
Central Services			
Retherm Docking Station	10		
Retherm Cart	30		
Retherm Tray	5000		
Mesa Juvenile			
Retherm Docking Station	8		
Retherm Cart	72		
Retherm Tray	5000		
LBJ Adult Detention			
Retherm Docking Station	45		
Retherm Cart	150		
Retherm Tray	10,000		
Durango Juvenile			
Retherm Docking Station	6		
Retherm Cart	22		
Retherm Tray	0		
Existing Durango Juvenile			
Retherm Docking Station	10		
Retherm Cart	38		
Retherm Tray	0		
4th Ave. Jail			
Retherm Docking Station	35		
Retherm Cart	306		
Retherm Tray	10,000		
ESB			
Retherm Docking Station	34		
Retherm Cart	136		
Retherm Tray	0		
REDUNDANCY			
Retherm Docking Station	2		
Retherm Cart	20		
Retherm Tray	0		

Additional pricing for computer hardware, software, and peripheral equipment. See ~~2.5.3.3~~ **2.5.2.5**

BURLODGE USA INC, 3760 INDUSTRIAL DRIVE, WINSTON-SALEM, NC 27105
~~PO BOX 4088, 3760 INDUSTRIAL DRIVE, WINSTON-SALEM, NC 27115-4088~~

Additional pricing for computer hardware, software, and peripheral equipment. See 2.5.3.2

Additional pricing for warranty response times of 4, 8, 12, and 24 hours. See 2.16.2

Additional pricing for a yearly-extended warranty agreement. See 2.17.1.

"Best and Final Offer"

Questions:

1. Validate imnrove~i cold side performance with the tray wrap heat seal eauinment.

    a. The Docking Station will be built with a base mounted, water-cooled condenser complete with ventilation slots in the side control panel wall. The overall performance of the watercooled unit is 28% more efcient than the air-cooled unit submitted for testing and demonstration purposes, resulting in colder food cavity operating temperatures and lower ambient running temperatures.

    b. The water-cooled system will dissipate less heat into the retherm area and reduce the ambient operating temperature of the system. As a result, the system will realize improved cold holding temperatures.

    c. The tray spacing between the tray slides will increase from 3" to 3 3/4" which affords improved airflow as well as enhanced operating and holding temperatures.

    d. See attached drawings showing overall heights of Docking Station (Detail) and Transport Cart (Detail)

2. Replace hinges on docking station and cart with heavy-duty alternative.

    a. The top and bottom hinges shall be changed to a heavy gauge plate stainless steel design mounted to the unit by means of correctional fasteners.

    b. Both the upper and lower hinge pins mounted in the door handles will increase in length. This will provide greater strength to the overall handle/hinge and offer a more sturdy assembly as required. This will also prevent separation of the handle from the hinge assembly due to a high impact crash due to abuse.

    c. See attached hinge drawing "Transport Cart Hinge Detail"

3. Improve performance of cart and dockinQstation door latches.

    a. All door latches will be a positive type design; closures shall have an improved latch design and hold security to ensure each unit does not open during transportation. All door latches will be located on the frame body of the cart in a position so the latch does not extend past the cart footprint; it shall be within the perimeter of the bumper. Each latch will be rounded off at the end to eliminate protrusions outside of the cart footprint and provide for safe opening and closing of all doors. The padlock feature has been deleted as requested in the meeting of April 23rd, 2002.

4. Consider addition of a physical latch to hold both cart doors oven while in the automatic wash line.

    a. The transport carts will be provided with a top mounted door open/closure latch. This latch shall fold over the door when in the open position and will be mounted on the upper frame on each side of the cart. This will secure the door and prevent it from swinging open during cart washing periods.

5. Top of cart should be skinned in stainless steel. Provide a seal for hatch oneninq:

   a. The top opening hatch compartment will be constructed of the same stainless steel as the exterior body of the cart as specified in tender response.

   b. The top opening hatch compartment will have a rubber seal to provide a barrier between the upper frame of the cart and the top when the lid is in the closed position.

6. Add security bumper fasteners on each side of base to prevent rubber bumRer from becoming dislodged on impact.

   a. The rubber cart base bumpers shall be secured to the lower cart frame on all sides by the use of security type bolts and nuts. These will be bolted through the base frame (two bolts/fasteners per side) and secured on the opposite interior side of the bumper frame. The bumper fasteners shall be recessed into the bumper so as not to damage walls or break/ bend on impact with solid objects.

   b. The bumper fabrication shall be of a design to facilitate easy repair and replacement.

   c. All bumpers will be pressure fit into the corresponding frame bracket.

7. Modify / strengthen method of boltina unit to base. Suggest bolt and flat washer assembly extend all the way through the base.

   a. A heavy-duty, stainless steel reinforcement will be added to the interior, lower subframe of the chassis base. This additional subframe shall be welded to the base of the cavity and have bolt-studs welded to the reinforcement. The resulting bolt-stud assembly will extend through the frame and the base. Two bolt-studs per corner plate (8 total) will be fabricated at approximately 3-4" off from each corner. These will provide added reinforcement to the cart cavity and the main cart base.

   b. These bolts shall be used to secure and fasten the main cart cavity to the mainframe base of the cart. All bolts shall be further secured with the use of blue locktite.

   c. See drawing attached titled "'Transport Cart Reinforcement Detail"

8. Provide identification card holder on top or face of cart.

   a. A stainless steel frame identification card holder will be mounted on the face of the cart. The stainless steel framed shall be secured using either a welding process or tamper-proof screws/fasteners.

   b. The stainless steel framed identification card holder will allow for a 3"x5" card to be inserted and read by the user.

9. Rotate handles inward to the extent possible (i/2" once cal side) to allow more handle clearance when 9oina through narrow doorways.

   a. The door handle mounting hinge bracket will be reshaped to give additional doorway clearance and provide added ergonomic space between the cart body and handles. This design also ensures the handles will remain within the footprint of the cart.

10. Consider pneumatic front wheels to make pushing over rises easier.

    a. This is not recommended as the tire pressure would change with the increase or decrease in ambient temperatures. When used outside under hot summer temperature conditions, the tires will over inflate and cause the carts not to line up with the docking station and improper docking will occur.

    b. Changes in temperature and tire pressure will reduce the life of the tire, which results in premature wear and increases maintenance costs.

    c. *At the time of submitting this "Best and Final Offers we are still investigating Burlodge needs to verify a manufacturer, investigate availability, functionality, and costs of this* option. *As a result we are unable to submit a price for this option at this time. This does not exclude the County from adding this* option to *the contract in the future when this* option *is qualified,*

11. Move wheels closer to the edge of cart base or extend brakq to allow even easier access to brake - inmates wear thick rubber boots.

    a. The wheels shall be moved closer to each corner of the base frame on each transport cart.

    b. The casters will have an additional stainless steel spacing block installed to the base. This increases the distance between the caster brake pedal and the subframe of the cart, which affords more room for inmates wearing rubber boots to apply and disengage the brakes.

    c. The caster bolts shall extend through the stainless steel spacer block and be screwed into the base of the cart. All bolts will be secured using blue locktite.

    d. See attached drawing of ""Transport Cart Detail"

12. Provide security fasteners throughout. per specifications.

    a. All carts shall be manufactured with security-type and approved correctional fasteners as specified.

13. Address method of stabilizing the currently unstable full cart.

    a. The stability of the cart will improve as a result of the relocation of casters towards the cart corners as detailed in our response to item 11.

    b. The weight added to the cart in the form of the reinforcement detailed in response 7a and the stainless steel caster blocks detailed in response 11b will enhance the stability of the unit by lowering the center of gravity.

14. Provide more detailed information regardina the trays alto status, final completion dates of ,trayrs, and recommendations on identifying hot from cold sides.

    a. Tray samples have been given to Champion Industries Ltd, the manufacturer of the tray washing machines for Maricopa, for their evaluation and testing in their tray washing machines.

    b. Our tray manufacturer is waiting for the final approval and issue of the contract before a production run can be scheduled. Based on the timeframes specified in addendum No 2, the first delivery of 5,000 trays will be made by October 30t', 2002.

c. Tray identification the "Hot Side" shall be designated by the "Sun" symbol. This emblem will be molded into both hot sides of the tray to provide easy hot side identification.

In the meeting of April 23'x, 2002 *between the representatives of Maricopa and Burlodge, Maricopa requested for Burlodge to identify the optional cost and leadtime for delivery of 500 prison trays. This request can be accommodated however it will require a special one-tine manufacturing run. Delivery will be 4/6 weeks following receipt of signed contract. Pricing for this is included in the pricing section of this response.*

15. Provide information reaardina installation experience, vendor expectations, and time frames for installation.

a. Installation Experience:

Burlodge has manufactured rethermalization equipment since 1984, and has been at the forefront of convection rethermalization technology. Our reference list in North America consists of more than 150 installations. The experience of the Burlodge team in the processes of cook-chill and rethermalization is unparalleled. Our manufacturing facility is ISO 9003 certified. Budodge was the first company to incorporate HACCF controls into the software of our equipment in 1996, recognizing this was an important tool for foodservice operators.

Successful Installations of a similar size and complexity include the following:

1. Winnipeg Regional Health Authority- This citywide project involves seven Hospitals and three long term care facilities, which utilize a centralized tray assembly plant to supply all of their meats. The 8,000 trays are assembled and shipped three times daily, with ware washing taking place at the assembly site. This project has been operational since 1998 and uses the Alphagen system (172 units) with an open dolly for transport (633 transport racks and dollies). The meals are transported to individual sites in refrigerated trucks and covered during transport with a launderable cover.

2. Jackson Memorial Hospital in Miami Florida is a 1,000-bed facility with decentralized rethermalization taking place in 22 locations throughout the complex. Tray assembly and ware washing are centralized. Jackson Memorial has been operating the Alphagen system with 119 noninsulated and enclosed transport carts since September 2000 and has 57 Alphagen carts on site.

3. Pinnacle Health in Harrisburg,, Pennsylvania consists of five sites at varying distances from the centralized tray assembly site (up to 13 miles). It operates with cook chill production and produces almost 3,000 trayed meals per day plus bulk meals for retail and long-term care. The Alphagen system is used for rethermalization of the meals and transportation is by means of the open dolly system.

4. Sunnybrook Hospital in Toronto, Ontario is a single site with multiple buildings spread over approximately ten acres. Meals are supplied to 600 acute care residents, 400 longterm care residents and Veterans, as well as 80 patients in a secondary site located 15 miles away. Their Alphagen system has been in service since 1997 with the open transport dolly and a disposable cover.

5. Lee Memorial Hospital in Fort Myers, Florida, along with the Health Park and Cape Coral facilities, form the Lee Memorial Health System, which implemented Cook Chill Production and rethermalization technology in July of 2001. Trays are assembled at the Lee Memorial Campus and distributed to the other sites by refrigerated truck. The Alphagen system is used to rethermalize approximately 2,700 meals per day.

b. Installation Support Personnel

The principal personnel within our organization assigned to your account should you choose to purchase Burlodge equipment are:

Installation:

1. Project Coordinator/Technical Manager	Corey Burns
2. Installation Engineer	Jim Pennington
3. Account Representative	Stace Carrington
4. Local Service Agent	See options detailed in item 16
5. Order/Shipping Coordinator	Pat Bottoms

Training and Support**:**

1. Project Training Coordinator	Suzanne Belisle, R.D.
2. Executive Dietitian	Wendy Herritt, R.D.
3. Local Dietitian	To be named
4. Food Specialist	Peter Scotland
5. Cook Chill Consultant	Neil Kirven

Additional personnel may be assigned to the project as needed to ensure a comprehensive and smooth transition with the introduction of the new system.

Installation Team:

Project Manager & Technical Manager- Corey Burn;

Corey is the Burlodge Technical Manager who will be the project manager and shall coordinate the installation of the rethermalization system with Maricopa. Corey has over four years of project management experience with turnkey rethermalization system installations throughout the USA. He has also been involved with the development of the Bnetwise cart monitoring system, as well as installing and implementing this system throughout the country. Corey is a graduate of the Engineering School at Vanderbilt University in Nashville, Tennessee, has an MBA from the University of Florida, and is a member of the Society of Manufacturing Engineers.

Installation Engineer- Jim Penninaton

Jim has over twenty years experience in the food service equipment industry, as both a sales specialist and in technical support of retherm systems. Jim will be involved with all aspects of the installation and implementation of the system. This includes the start up phase, equipment testing and all implementation phases.

Proiect Account Representative- Stace Carrington

Stace, who has responsibility for Western Regional Sales for Burlodge USA, is based in our Dallas, Texas office. Stace has twenty-four years experience in the fowl service industry in both commercial and non-commercial meal delivery and rethermalization systems. He has held positions in technical service as well as sales and has been a rethermalization and delivery specialist for various companies. His experience provides hands-on operational expertise along with a strong commitment to customer satisfaction and after sales support and service.

Local Service Agent

See details of Service options as detailed in item 16 sub sections 3 and 4

Order/ShiRpinq.Coordinator - Pat Bottoms

Pat provides comprehensive customer sales service for your facility. As Order/Shipping Coordinator, she oversees prompt shipments and will address any concerns quickly and effectively. She maintains all records, contracts, orders and correspondence affecting the status of your orders.

Project Training Coordinator - Suzanne Belisle.

Suzanne has over 20 years of experience in institutional foodservice in management and clinical capacities. As a registered dietitian with an avid interest in consumer services, she coordinates the necessary details of the training and implementation process through to the final point of service. Her knowledge of day-to-day operational issues assists clients to prepare and implement their new systems. Suzanne is a member of the American Dietetic Association.

Executive Dietitian - Wendy Herritt, R.D.

Wendy has worked in Food Service for the past twenty years in numerous management capacities. She joined Burlodge in 1995 and has assisted over 50 clients in their project startups with both tray and bulk systems. This experience is reflected in the number of training and implementation resource documents she has developed to assist every Burlodge customer to facilitate a smooth transition and successful launch. Wendy is also a member of the American Dietetic Association.

Local Registered Dietitian - To be Named

A local dietitian experienced in cook chill and cold-plating systems will act as a local resource and troubleshooter/trainer for the duration of the contract with Maricopa County. This person will be fully trained and conversant with your system, and will take part in the installation training and start up. They will conduct 2 post installation site visits per year to review the operation of the equipment, conduct refresher training and represent Burlodge in the Phoenix area.

Food Specialist - Peter Scotland

Peter has a varied background in his twenty years in the foodservice industry specializing in cook chill operations. He received his foodservice training in the British Royal Navy. He went on to develop a menu and HACCP program for a Central Production System for one of the largest healthcare organizations in the UK. Peter relocated to the USA in 1999 as a consultant to Saint Vincent's Hospital in Massachusetts for the implementation of their cook chill production and HACCP program serving multiple sites. Peter joined Burlodge in 2001, and is a valuable resource for both cook chill production and implementation of rethermalization systems.

Cook Chill Consultant - Neil Kirven

Neil has in excess of 25 years experience in all aspects of the food service industry, both in commercial and institutional fields. Originally from the UK, he has held positions with the British Gas Corporation and Gardner Merchants Ltd in operational and consultancy roles. During the last 18 years Neil has been instrumental in the design, development, installation as well as the operation of numerous Cook Chill sites using all of the various technologies available for this process. Since moving to the United States in early 1993 he has been involved and consulted on numerous Cook-Chill projects before joining Burlodge in October 1995.

c. Training and Implementation Program

All training is provided for and is included in the bid documents. No additional charges apply unless the client requests specific additional training activities over and above those outlined. One Man Day is considered to be 8 hours of on-site time.

1.0 Prototype Training - February/March 2002 (up to 10 man days)
Completed

Goals:
1. To ensure all staff involved with the evaluation of the new meal delivery system are familiar with its operation.
2. To solicit feedback and comments regarding the proposed system.

2.0 Initial Training- August 2002 Pre-production unit (up to 6 man days)

Goal:
1. To familiarize the staff with the operation of system, enable on-site testing of other aspects of the new system.
2. Verify all site conditions, mechanical, electrical, doorway access, storage areas, staging areas, and delivery conditions.
3. Site coordination for Phase I delivery prior to October 2002 with all involved parties.

3.0 Installations and In-Service Support- October 2002 through My 2003

3.1 Technical and Installation Support by Burlodge
Carried out by the Project Manager and his support team, including local service agent representatives prior to implementation**.** Burlodge's Project Manager and his team will work closely with your project management group and engineering staff to ensure proper installation preparations are made for the entire Burlodge System.

Responsibilities covered by Burlodge include:

Coordinating site conditions with design engineers, including both electrical and mechanical contractors as well as the general contractor.

Attend all site meetings and coordination of all drawings and plans as they affect the installation of the rethermalization system.

Project manager shall provide and be responsible for all Burlodge lines of communication and written documented responses between all parties and Burlodge.

Shall to the single contact point and report to Maricopa and its project management for all Burlodge personnel and their activities while on site.

Co-ordination of all aspects of the delivery and installation between your project management and Burlodge, our installation engineers and service agents.

Complete checking of all equipment received into your facility prior to implementation.

Responsibility of the Client:

Maricopa shall provide Burlodge with the latest site drawings both in printed and in CAD format.

Maricopa shall provide prior to the time of delivery a lockable area for Burlodge to stage its equipment for the purposes of:
Storage and staging during site delivery.
Uncrating of equipment.

To provide a second facility or room that can be locked and used by Burlodge as an office during the entire period of installation, training and start up.

Shall provide all necessary security passes and a means of security communication.

Shall provide and ensure all areas designated as rethermalization areas will be in a finished condition (all floors, walls, mechanical, electrical and lighting of room shall be finished prior to the installation of Docking Stations). If such rooms are not completed it shall be the County's responsibility to provide proper protection for all installed and staged equipment until such equipment is turned over to the County.

At the time of Docking Station installation the facility will be required to provide engineering support personnel, including the mechanical and electrical contractors to support the general site work performed to enable the final connection and oration of the Docking Stations.

Installation /Technical Support Summary

Site	Approximate	# Retherm	Approximate
	Date	Stations	#Man Days
LBJ – Central Services	October 2002	10	Installation/Technical – 20
ESB	October 2002	34	Installation/Technical – 20
Redundancy	October 2002	2	Included in the above days
Mesa Juvenile	March 2003	8	Installation/Technical – 8
LBJ Adult Detention	April 2003	45	Installation/Technical – 32
Durango Juvenile New	June 2003	16	Installation/Technical –12
& Existing			
4t" Avenue	July 2003	35	Installation/Technical – 32
		Total Man Days	124

3.2 Operational Staff Training by Burlodge: carried out by the Burlodge Project Training Coordinator and her team as required.
Training Outline for In-Service Sessions held prior to startup:

a. Instructions as to correct operating procedures
b. Respecting the cold chain process - HACCP and monitoring features
c. Loading and unloading with the Transfer Rack
d. The control and procedures for operating heating cycles
e. All aspects of meal service
f. Correct cleaning and sanitation
g. Storage and care of the cart system and its components
h. Training sign off documentation

During Startup:

Burlodge staff will provide direct "on-the-job" training and coaching to the facility's employees as they begin to orate the system. Troubleshooting and recommendations for modifications to procedures will be communicated through post meal evaluations and documented in "end of the day" review reports. These reports will be consolidated into a full written report at the end of each start-up phase. Identified problem areas will be highlighted and any equipment adjustments made or recommended will be detailed. During this period technical staff or our local service representative will be on site or available to address any immediate technical issues should these arise.

Responsibility of the Client:

The facility will be required to provide the necessary level of supervision in all areas of the operation, including:

Tray assembly
Transportation
Delivery
Retrieval and sanitation

Monitor and record the ability of the facility's employees to assimilate the training they have received.

The facility's supervisors shall be responsible for recording any appropriate data on employees training files.

Employees who receive training will complete training sign off record sheets indicating they have completed the required training program.

Operational Staff Training Summary

Site	Approximate Date	# Of Retherm Stations	Approximate Man Days
LBJ – Central Services10 ESB Redundancy	October 2002 October 2002 October 2002	10 34 2	Staff Training –10 Staff Training –10 Included in above days
Mesa Juvenile	March 2003	8	Staff Training - 4
LBJ Adult Detention	April 2003	45	Staff Training - 16
Durango Juvenile New & Existing	June 2003	16	Staff Training - 6
4t" Avenue	July 2003	35	Staff Training -16
		Total Man Days	62

Sample Implementation Timetable

3.3 Sample ""Go Live" Individual Site Schedule

Date	Task/Training	Responsibility Of:
Go Live minus two weeks	Commence Staff in-service training - cart handling and operation, rethermalization cycles, central monitoring and HACCP controls	Burlodge (Maricopa to schedule)
Go Live minus two weeks	Equipment and Installation checked by Burlodge engineers. Automatic timers set.	Burlodge (Maricopa to supply service times)
Go Live minus four days	Training sessions completed	Maricopa Staff and Burlodge Team
Evening prior to start-up day	Tray first meal for retherm	Maricopa Staff and Burlodge Team
Start-up day	Serve first Meals Continued coaching on operation and monitoring Plate lunch, dinner and breakfast in accordance with schedule. Troubleshoot, monitor temperatures and food quality. Review days activities and plan amendments as necessary	Maricopa Staff and Burlodge Team
First Week	As start-up day	Maricopa Staff and Burlodge Team

4.0 Post Start-up Support:

Burlodge is committed to the ongoing support of the System being supplied for the life of the equipment.

4.1 Burlodge will:

Provide two visits to each site, per year by a Burlodge representative during the first thirtysix months post start-up to review operational progress and advise where necessary.

Undertake additional visits to those identified above if deemed appropriate after consultation between the client and the Burlodge representative.

Provide permanent "help-line" support for day-to-day operational or technical queries.

Provide "refresher" training or training for system upgrades as and when appropriate.

Provide all Bnetwise software updates during the entire three-year warranty period.

4.2 Supplementary Training

In addition to the above planned training schedules, supplementary training will be provided on a per diem rate per day plus reasonable expenses per trainer, as outlined in the bid document.

16. Offer a creative approach to your warranty and maintenance proposal. With your knowledge of the environment that your product will reside d~ we would like to guage from dour response the level of risk your company is willing to share with Maricopa County.

Burlodge is prepared to offer for your consideration two-warranty options and two options for service:

1. Warranty Option One - Burlodge Standard Warranty
2. Warranty Option Two - Burlodge No-Fault Warranty
3. Service Option One - Outside local Service Agent
4. Service Option Two - In-h'buse Appointed Service

1. Burlodge Standard Warranty

a. Burlodge U.S.A., Inc. guarantees all rethermalization equipment to be free from defects in material and workmanship under normal use and service to cover full parts and labor for 3 (three) years from the date of final acceptance of each installation phase.

b. Five-year refrigeration compressor warranty covers the replacement of defective compressor only.

c. Warranty includes preventive maintenance performed by the local service agent as per attached checklist included in Appendix 3 of bid proposal.

d. Standard Response Time:
During Normal Working Hours, i.e. Monday to Friday - 4 hours response time
Weekends, evenings and holidays- response time will be within 8 hours; <u>there is No Additional Cost for his response time.</u>

e. Optional extended warranty agreement- See Pricing section of bid document.

f. Spare Part Availability
Burlodge U.S.A., Inc. guarantees to hold stock of recommended spare parts for all the equipment supplied at the following locations:

- Local Certified Service Agent
  To be determined
- Burlodge USA Inc.,
  3760 Industrial Drive,
  Winston-Salem, NC, 27115
  Tel No. 1 877 RETHERM (Toll Free)

Standard recommended Stock of Spare Parts can be found in Appendix 5 of original bid document.

g. Manuals shall be provided to the local service agent as well as Maricopa County, to cover the installation and operation of the system supplied.

h. Conditions to Foregoing Warranties:
The customer will be liable to pay the appropriate call charge if the failure is caused by:

1. Neglect or misuse of the equipment
2. Fire, water or, frost
3. Fitting parts not supplied by Burlodge U.S.A. Inc., and or its authorized agents
4. Service carried out by service companies not authorized by Burlodge U.S.A., Inc.
5. False call-out
6. Failure of power supply or abnormal voltage fluctuations
7. Abnormal water conditions

i. The purchaser expressly acknowledges that Burlodge assumes no obligation whatsoever for commercial loss of food, personal injury resulting from spoilage of food or any other product or material relating to the use of the product sold hereby, whether or not any alleged defective part is covered by the warranty set forth herein.

2. Burlodge No-Fault Warranty

a. Burlodge U.S.A., Inc. guarantees all rethermalization equipment to cover full parts and labor for 3 (three) years,
<u>No- fault</u>, from the date of final acceptance of each installation phase.

b. Five-year refrigeration compressor warranty covers the replacement of defective compressor only.

c. Cost of this option is outlined in the revised pricing section of the bid document attached in this "Best and Final Offer."

d. Warranty includes preventive maintenance performed by the local service agent as per attached checklist included in Appendix 3 of bid proposal.

e. Standard Response Time:
During Normal Working Hours, i.e. Monday to Friday - 4 hours response time
Weekends, evenings and holidays- response time will be within 8 hours; <u>there is No Additional Cost for this response time.</u>

f. Optional extended warranty agreement- See Pricing section of bid document.

g. Spare Part Availability
Burlodge U.S.A., Inc. guarantees to hold stock of recommended spare parts for all the equipment supplied at the following locations:

- Local Certified Service Agent
  To be determined

- Burlodge USA Inc.,
  3760 Industrial Drive,
  Winston-Salem, NC, 27115
  Tel No. 1 877 RErHERM (Toll Free)

Standard recommended Stock of Spare Parts can be found in Appendix 5 of original bid document.

h. Manuals shall be provided to the local service agent as well as Maricopa County, to cover the installation and operation of the system supplied.

i. Conditions to Foregoing Warranties:
The customer will be liable if the failure is caused by:

1. Fire, water or frost
2. Fitting non-O.E.M. parts or non-authorized parts.
3. Service carried out by a service company not authorized by Burlodge U.S.A., Inc.
4. Failure of power supply or abnormal voltage fluctuations.
5. Abnormal water conditions.

j. The purchaser expressly acknowledges that Burlodge assumes no obligation whatsoever for commercial loss of food, personal injury resulting from spoilage of food or any other product or material relating to the use of the product sold hereby, whether or not any alleged defective part is covered by the warranty set forth herein.

3. Service Option One- Outside Service Agent

a. All repairs and maintenance for warranty related work the local Burlodge agent will perform these repairs within the Phoenix area.

b. There are three types of maintenance that will be preformed on the equipment during the warranty period:

i. Demand maintenance -defined as regular type maintenance that occurs due to a non-warranty related equipment problem or failure. This work can be carried out by a Factory trained engineer or authorized service agent, who will charge the facility for this type of demand, non-warranty related service call.

ii. Preventative Maintenance - defined as an on going responsibility of the owner of the assets to maintain the equipment in optimal status. The facility will complete semi-annual preventative maintenance checks following a pre-determined schedule supplied by Buriodge. The facility's maintenance department staff will be given training on this important aspect of maintaining their asset at the time of start up by a Buriodge Factory Trained

engineer. This service is included during the warranty period in the base submission as performed by the local service agent.

iii. Warranty, Related Maintenance - defined as maintenance of equipment when a problem or failure occurs and that problem is covered under the terms of the Warranty Program. Burlodge and/or our authorized service agent is responsible for taking action. Burlodge and/or our authorized service agent will complete the necessary warranty work. Burlodge's technical staff and/or our authorized service agent will come to the facility(s) and repair the equipment and Burlodge will be billed for all parts and labor where applicable.

c. Local authorized service agent Standard Response Time:
During Normal Wording Hours, i.e. Monday to Friday - 4 hours response time
Weekends, evenings and holidays - response time will be within 8 hours; there is No Additional Cost for this response time.

d. Spare Part Availability
Burlodge U.S.A., Inc. guarantees to hold stock of recommended spare parts for all the equipment supplied at the following locations:

- Local Certified Service Agent
  To be determined
- Burlodge USA Inc.,
  3760 Industrial Drive,
  Winston-Salem, NC, 27115
  Tel No. 1 877 RETHERM (Toll Free)

Standard recommended Stock of Spare Parts can be found in Appendix 5 of original bid document.

4. Service Option Two- In-house Appointed Service Agent

a. The maintenance department within the Maricopa Correctional Department would become an Authorized Service Agent of Burlodge USA, Inc and will perform all Warranty and Non-Warranty related service work as well as preventative maintenance.

b. The facility or maintenance department would sign an Authorized Service Agents Agreement and would then in turn be reimbursed at a negotiated hourly rate for the work it completes an behalf of Burlodge far Warranty related work.

c. The maintenance department would appoint at least 2 and no more than 3 engineers to attend a one week factory training course to be held at a time and date convenient to all parties but prior to the start up and implementation of the first phase of the project. Cost of training course would be included and will include all travel, meals and hotel costs at the responsibility of Burlodge.

d. The department would hid within the facility a stock of spare parts and wild on a regular basis return any defective parts to Burlodge as requested by the Burlodge Technical Manager.

e. Defective warranty parts will be exchanged throughout the life of the warranty period at no cost to the facility.

f. The maintenance department will complete and submit to the Burlodge Technical manager a completed work order showing any and all service work perfarmed regardless whether such work is warranty, non-warranty or preventative maintenance.

g. The maintenance department and/or Maricopa County as an Authorized Service Agent of Burlodge will be entitled to purchase all service parts directly at the lowest service agents pricing.

17. Tender a plan for in-service performance level, which you are willing to commit resources Lo. accomplishment and evaluation of your goals.

a. % Of Up Time Performance

1. Docking Station - as a fixed asset we expect this piece of equipment to have a 95-98% uptime rating.
   a. Stationary module.
   b. Reliable and standardized components.
   c. Water Cooled Compressor.
   d. Two redundant docking stations built in to the base contract by Maricopa County.
   e. Trained and certified service agents with 4-hour response time.
   f. Local storage of service parts.
   g. BNetwise alarm notification and troubleshooting assistance.
   h. Modular construction - easy to effect repairs, reduction of downtime.

2. Transfer Rack - an integrated component of the system we expect this equipment to have a 95-98% uptime.
   a. Only one replaceable part - Teflon slide.
   b. Trained and certified service agent with 4-hour response time.
   c. Local storage of service parts.

3. Enclosed Transport Cart - as the only mobile piece of equipment within the system and with the most exposure for abuse, we expect to have a realistic uptime rate of 90-95%.

   a. Heavy Duty stainless steel construction.
   b. Foamed in place insulation.
   c. Increased platform reinforcement.
   d. Eight-inch (8") casters.
   e. Heavy-duty bumpers.
   f. Twenty (20) redundant carts built in to the base contract by Maricopa County.
   g. Trained and certified service agents with 4-hour response time.
   h. Local storage of service parts.

b. Action Plan for In-Service Performance

1. In-House Maintenance Staff will receive training from our factory engineers for all warranty/service issues.

2. Program for maintenance department to become an authorized service agent to handle all warranty, non-warranty, and preventative maintenance issues.

3. Program for maintenance department as authorized service agent to bill back the costs of warranty related service work.

4. Program for maintenance department to become authorized part depot and agent.

5. Program developed for preventative maintenance within the Maricopa County Detention System.

6. Ongoing technical and operational training.

   a. Service.
   b. Technical.
   c. Operational.
   d. Educational.
   e. Semi-Annual operational reviews.

7. Semi-Annual technical site visits by the Burlodge technical staff.

8. Local registered dietician to assist in operational issues.

9. Redundancy in service agencies (local service agent to provide backup support for in-house staff if Optional In-House Service Agency Agreement is utilized):

   Prime Refrigeration,
   3821 North 43rd Ave.
   Phoenix, AZ 85031

   Contact: Arnie Page
   Phone: 602-269-1752;
   Fax: 602-269-8955; Mobile: 1-602-309-8556
   Email: priref@aol.com; Mobile: 602-570-8774

c. Optional In-House Service Agency Agreement

   1. 2-3 Maricopa County Maintenance Engineers will receive one week of in-depth training at the Burlolge factory.

   2. Coordination with Burlodge technical staff on any and all maintenance, warranty, and service issues.

   3. Ability to interact with the Burlodge technical staff utilizing the BNetwise realtime, On-Line monitoring system.

   4. Ability to access and obtain certified O.E.M. parts directly from Burlodge.

d. Optional Program for a 3 year, "No-Fault Warranty" which has been outlined in the detail pricing section of the "Best and Final" proposal.

e. Installation and Technical Implementation support for a total of 124 man-days as detailed in section 15 above.

f. Operational Support and Training of staff for a total of 62 man-days as detailed in section 15 above.

g. Optional Post Warranty Period

   1. Standard extended Warranty
      Cost for optional standard extended warranty period for years four and five is provided in pricing attachment in bid document, which includes additional preventive maintenance to be performed by Burlodge Service Agent.

   2. Optional ""No Fault" extended Warranty
      Cost for optional '**No Fault" extended warranty period for years four and five is provided in pricing attachment in bid document, which includes additional preventive maintenance to be performed by Burlodge Service Agent.

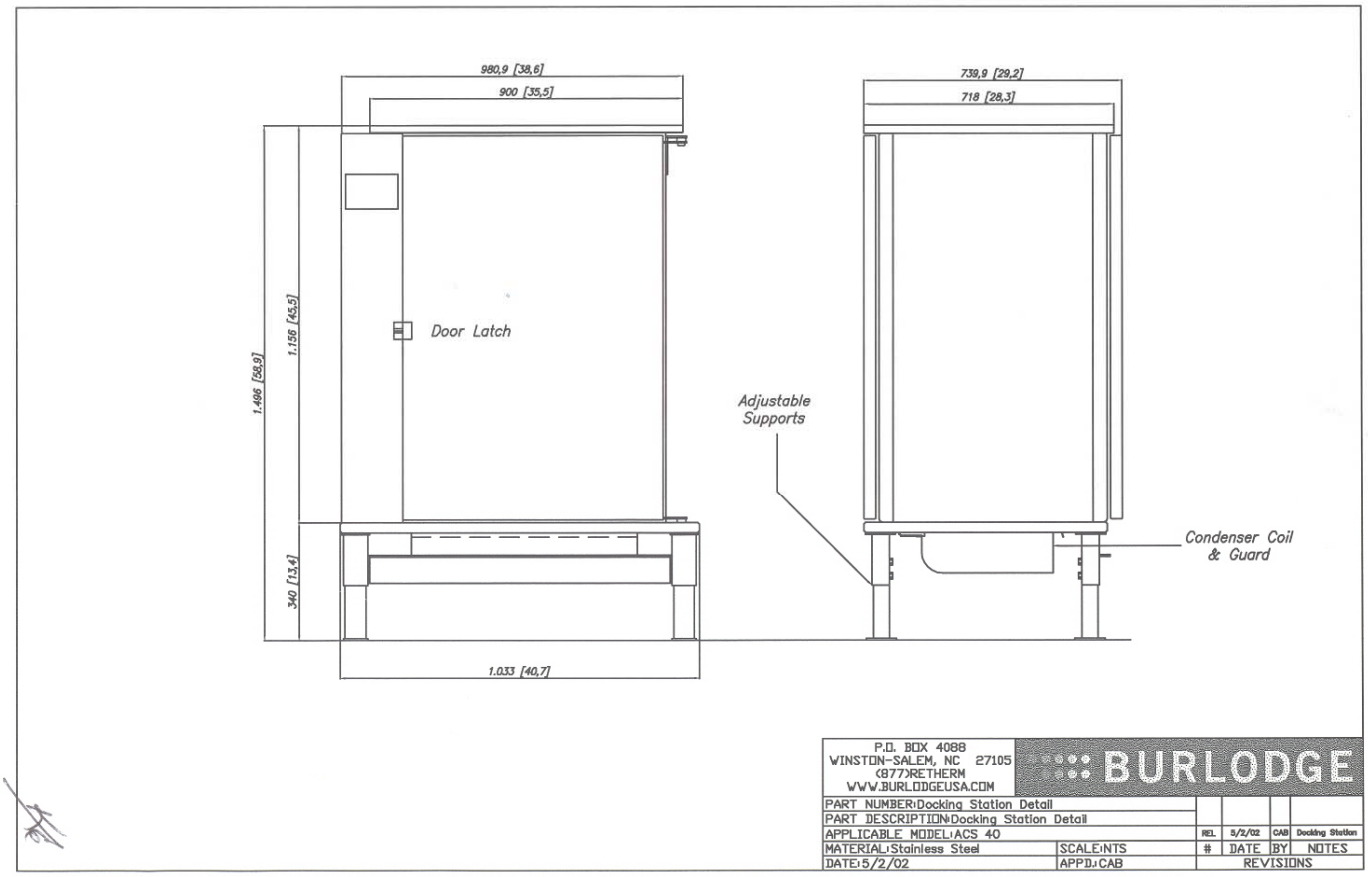
980,9 [38,6]
900 [35,5]
739,9 [29,2]
718 [28,3]
1.496 [58,9]
1.156 [45,5]
340 [13,4]
Door Latch
Adjustable Supports
Condenser Coil & Guard
1.033 [40,7]
P.O. BOX 4088
WINSTON-SALEM, NC 27105
(877)RETHERM
WWW.BURLODGEUSA.COM
BURLODGE
PART NUMBER:Docking Station Detail
PART DESCRIPTION:Docking Station Detail
APPLICABLE MODEL:ACS 40
MATERIAL:Stainless Steel
SCALE:NTS
DATE:5/2/02
APPD.:CAB
REL
5/2/02
CAB
Docking Station
#
DATE
BY
NOTES
REVISIONS

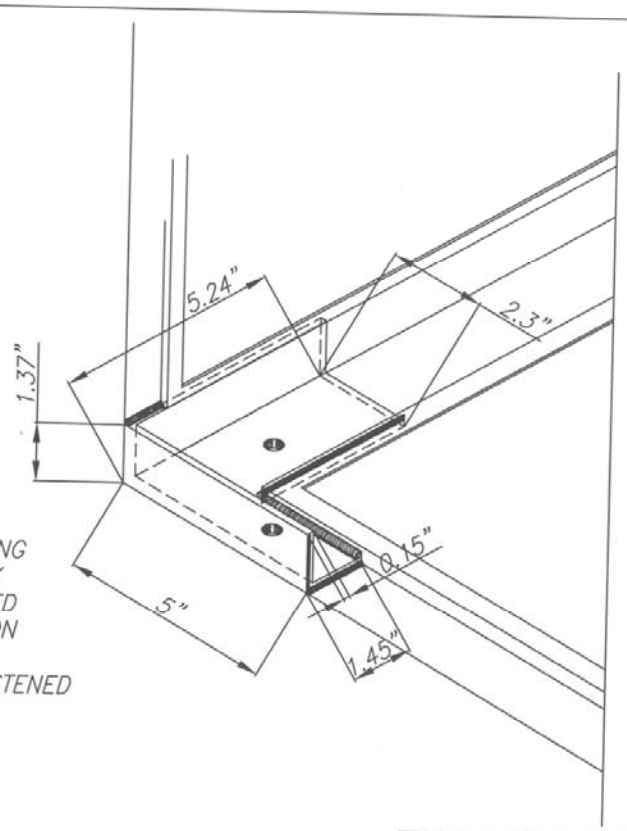

THE STRENGHTENING OF BOLTING UNIT TO BASE IS ACHIEVED BY FOUR CORNER PLATES (SHOWED IN DRAWING) INSIDE WELDED ON THE UNIT.
THE CORNER SCREWS ARE FASTENED ON THESE PLATES.

P.O. BOX 4000
WINSTON-SALEM, NC 27103
(877)RETHINK
WWW.BURLODGEUSA.COM

BURLODGE

PART NUMBER: Transport Cart Reinforcement Detail
PART DESCRIPTION: Transport Cart Reinforcement Detail
APPLICABLE BURLU ACT 40
MATERIAL: Stainless Steel
SCALE: NTS
DATE: 5/2/02
APPR: CAB

NO.	A/A/Ne	CAB	Reinforcement
0	DATE	BY	NOTES

REVISIONS

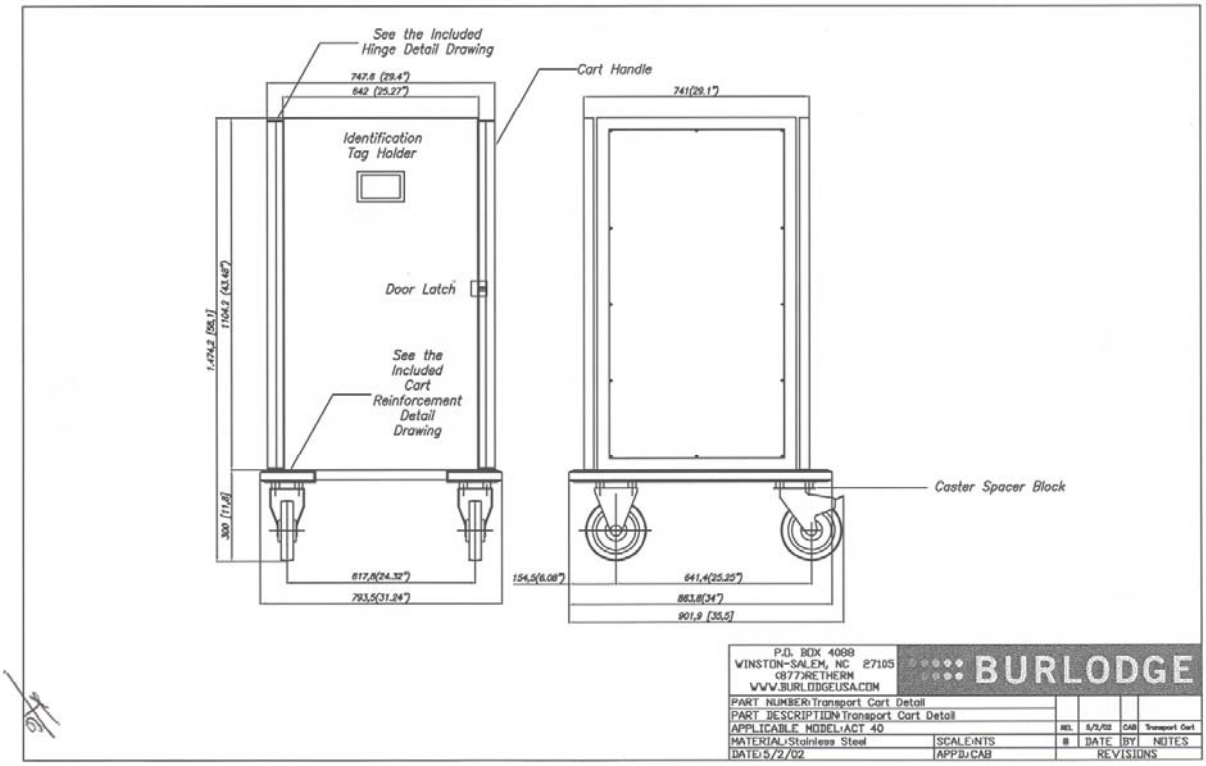
See the Included Hinge Detail Drawing
Cart Handle
747,8 (29,4")
643 (25,27")
741(29,1")
Identification Tag Holder
Door Latch
1.474,2 [58,1]
1104,2 (43,48")
See the Included Cart Reinforcement Detail Drawing
Caster Spacer Block
300 [11,8]
817,8(24,32")
793,5(31,24")
154,5(6,08")
641,4(25,25")
863,8(34")
901,9 [35,5]
P.O. BOX 4088
WINSTON-SALEM, NC 27105
(877)RETHERM
WWW.BURLODGEUSA.COM
BURLODGE
PART NUMBER: Transport Cart Detail
PART DESCRIPTION: Transport Cart Detail
APPLICABLE MODEL: ACT 40
MATERIAL: Stainless Steel
SCALE: NTS
DATE: 5/2/02
APP'D: CAB
REV. 5/3/02 CAB Transport Cart
REVISIONS

PRICING

ITEM DESCRIPTION	QUANTITY	UNIT PRICE	EXT. PRICE
Central Services			
Retherm Docking Station	10	11, 919.00	$ 119,190.0
Retherm Cart	30	4,942.00	$ 148,260.00
Retherm Trays	5,000	26.00	$ 130,000.00
Mesa Juvenile			
Retherm Docking Station	8	11,919.00	$ 95,352.00
Retherm Cart	72	4,942.00	$ 355,824.00
Retherm Trays	5,000	26.00	$ 130,000.00
LBJ Adult Detention			
Retherm Docking Station	45	11,919.00	536,355.00
Retherm Cart	150	4,942.00	$ 741,300.00
Retherm Trays	10,000	26.00	$ 260,000.00
Durango Juvenile			
Retherm Docking Station	6	11,919.00	$ 71,514.00
Retherm Cart	22	4,942.00	$ 108,724.00
Retherm Trays	0		
Existing Durango Juvenile			
Retherm Docking Station	10	11,919.00	$ 119,190.00
Retherm Cart	38	4,942.00	$ 187,796.00
Retherm Trays	0		
4th Avenue Jail			
Retherm Docking Station	35	11,919.00	$ 417,165. 00
Retherm Cart	306	4,942.00	$1,512,252.00
Retherm Trays	10,000	26.00	$ 260,000.00
ESB			
Retherm Docking Station	34	11,919.00	$ 405,246.00
Retherm Cart	136	4, 942.00	$ 672,112.00
Retherm Trays	0		
REDUNDANCY			
Retherm Docking Station	2	11,919.00	$ 23,838.00
Retherm Cart	20	4,942.00	$ 98,840.00
Retherm Trays	0		

Additional Pricing

1. Optional pricing for computer hardware, software, and peripheral eguiument. See 2.5.3.3

Cost for Burlodge Bnetwise monitoring system to include the supply of and installation of:
Seven (7) Pentium 3 PC's c/w the following:
128 MB of Ram each
CD Rom
Windows 2000
Access 2000
PC Anywhere
All hardware and wiring to PC
All software required to operate Bnetwise system
Burlodge Bnetwise operating license
PM contract for Computer System Five (5) years

Net Cost $158,381.00

2. Additional Pricing for standard warranty response times of 4, 8,12 and 24 hours. See 2.16.d

Response time Monday to Friday within 4 hours	Net Cost	No Charge
Response time on weekends within 4/8 hours	Net Cost	No Charge

3. Optional Burlodae No-Fault Warranty

Burlodge U.S.A., Inc. guarantees all rethermalization equipment to cover full parts and labor for 3 (three) years, no-fault, from the date of final acceptance of each installation phase. This No-Fault warranty does not however relieve the County from total responsibility for the protection and maintenance of the equipment. It does allow for total part replacement within the first three (3) years of operation. It does not cover repair of equipment that is damaged beyond the point of repair.

Total optional cost for No-Fault warranty Net Cost $348,330.00

4. Optional pricing for two year standard-extended post warranty agreement.
2 year post warranty parts
2 year post warrant labor
2 year post warranty PM contract

Total optional post standard extended two year warranty. Net Cost $225,910.00

5. Optional pricing for two year No-Fault-extended post warranty agreement.
2 year post warranty parts
2 year post warrant labor
2 year post warranty PM contract
Terms of additional No-Fault same as detailed in item 3 above

Total optional post two-year No-Fault warranty. Net Cost $267,953.00

6. Optional pricing as per section 2.5.2 Addendum No 2 to provide food monitoring system fog food transport carts from the time the Carts leave the Central Services Kitchen to the time the cart is docked at the retherm dockina station.

Total optional cost for C2Temp Monitoring Net Cost $60,293.00

7. Qptional additional 500 Prison Trays delivered early.

In the meeting of April 23`d, 2002 between the representatives of Maricopa and Burlodge, Maricopa requested for Burladge to identify the optional cost and lead-time for delivery of 500 prison trays. This request can be accommodated however it will require a special one-time manufacturing run. Delivery will be 4/6 weeks following receipt of signed contract.

Total optional cost for above Net Cost $18,020.00

8. Optional Semi-Pneumatic Casters.

At the time of submitting this "Best and Final Offer" we are still investigating the opportunity to offer, as an option, an 8" diameter semi-pneumatic wheel. Burlodge needs to verify a manufacturer, investigate availability, functionality, and costs of this option. As a result we are unable to submit a price for this option at this time. This does not exclude the County from adding this option to the contract in the future when this option is qualified.

Total optional I cost for above Net Cost To be Confirmed

9. Warranty Bonding Saving

Due to the wording within the RFP Document pertaining to section 2.16 Warranty Period relating to the statement that, "the Retherm System shall carry a three year warranty, including parts & labor, on materials and workmanship and a five-year warranty on the compressors."
Burlodge's Surety Company advises that it requires that we include the cost of warranty bonding for the full five years due to the five-year warranty on the compressors.

Should the County decide that the Bonding requirement could expire at the conclusion of the final delivery in July of 2003 there would be a savings to the County in the cost of the warranty bonding ending four years early, (See below Bond expiry August 2003).

Should the County decide that the warranty bond should continue till the end of the three-warranty period there still would be a savings to the County in the cost of the warranty bonding ending Two years early, (see below Bond expiry August 2005).

Cost Reduction for Banding Warranty Expiring August 2003, 4 years early
Net Cost Savings-$ 63,590.00

Cost Reduction for Bonding Warranty Expiring August 2005, 2 years early
Net Cost Savings-$31,795.00

BURLODGE USA INC, 3760 INDUSTRIAL DRIVE, WINSTON-SALEM, NC 27105
~~PO BOX 4088, 3760 INDUSTRIAL DRIVE, WINSTON-SALEM, NC 27115-4088~~

Pricing Effective 07/01/07

BURLODGE

Burlodge USA, Inc
3760 Industrial Drive
Winston-Salem, North Carolina 27115
Tel: (336) 776-1010 Fax: (336) 776-1050
Email: info@burlodgeusa.com

Quotation

Maricopa County Sheriffs Office
3250 West Lower Buckeye Road
Phoenix, AZ 85005
Attn: Lt. Robert Barcelo
Copy: Dorothy Gallagher

Quote No: MCC4/nsk/05.31.07 - Item Pricing

Date : May 31, 2007

Product Description	Code No	Tax Rate	Item Totals Exclusive of Tax: Equipment Price	Installation Cost	Freight Estimate	Warranty Cost	Net Price	Qty	Item Totals Inclusive of Tax: Equipment Price	Tax	Installation	Freight	Warranty	Total
Equipment Pricing														
ACS-40 Correctional Docking Station, 480/3/60 cycle Water cooled as per plans and specifications, Best and final and changes as per factory inspection & testing.	COG845	0.081	15,983.00	426.00	450.00		16,859.00	1	15,983.00	1,294.62	426.00	450.00		18,153.62
Bretwise for Docking Station	COA070	0.081	1,067.00				1,067.00	1	1,067.00	86.43				1,153.43
ACT-40Correctional Isoflex Insulated transport cart as per and specifications, Best and final and changes as per factory inspection & testing, includes 8" swivel casters	COA007	0.081	7,797.00	54.00	317.00		8,128.00	1	7,797.00	628.32	54.00	317.00		8,796.32
ACC-40 Prison tray transfer rack included	COG.007													
2C temp Monitoring System for Prison Transfer Rack	2CT	0.081	114.05				114.05	1	114.05	9.24				123.29
3 year Extended No Fault Warranty	NFW03					1,758.00	1,758.00	1					1,758.00	1,758.00
Sub Totals														
Applicable Tax (8.1%)														
Tray Pricing														
Correctional Tray, One Piece - Hot & Cold Tray - PSSU Material	C00.000.01	0.081	42.44		0.24		42.68	1	42.44	3.4		0.24	-	46.12
Sub Totals														
Applicable Tax (8.1%)	Tax Rate													

Comments:
The above prices are quoted net FOB Burlodge Factory, Bergamo Italy (source origin) and an estimate of freight is included as a separate line item
The above prices include all duties and import taxes as required by US customs
Prices are quoted net w/ applicable taxes and taxes are shown as extra line items where applied
A separate line item cost for installation and setting into place is included as a extra cost.
Prices are firm 40 days from date quoted for delivery between July 1st 2007 to June 30th 2008.
Prices are net 30 days with 2% discount for payment 10 days from delivery to Maricopa.

The effective date of amendment No. 1 is 08/01/08

Office of the
AUG 13 2008
CFO

FOOD RETHERMALIZATON SYSTEM
01134-RFP
CONTRACT AMENDMENT NO.1

1.0 Scope of Work:

The following describes a preventative maintenance (PM) and service and repair agreement between Maricopa County (County) and Burlodge USA Inc. (Contractor) under contract #01134-RFP. All other terms and conditions of the contract shall remain unchanged.

2.0 PM Contractor Responsibilities:

2.1 Contractor shall provide bi-annual PM of equipment manufactured by the Contractor and owned by the County based on the quantities below.

ACS Rethermalization Docking Stations-214
ACT Tray Rack Transportation Carts-1048
ACT Tray Support Rack Inserts-1048

2.2 Contractor shall provide bi-annual PM based on the County owned equipment listed in #2.1 according to Exhibit 1 and 2.

2.3 Contractor shall meet with a representative of the County on a weekly basis or more frequently if required to review the completion of PM and non-PM service work.

2.4 Contractor shall provide monthly inventory reports of work status in an acceptable format to the County.

2.5 Contractor shall be available to the County 24 hours a day 7 days a week.

2.6 The PM agreement shall include all direct labor and overhead, equipment, small tools, common expendables including materials required to facilitate maintenance.

2.7 Contractor shall provide a minimum of three (3) visits per year by Contractor personnel for audit and supervisory purposes at no additional cost.

3.0 Service and Repair Contractor Responsibilities:

Contractor shall provide labor and parts for the repair of damaged equipment not deemed part of the PM process (see Exhibits 1 and 2) per the following:

NSW 8/26/08

3.1 Contractor shall provide the first 8 hours per week or 32 hours per month for a four week calendar month and 40 hours per month for a 5 week calendar month to carry out repairs of damaged or failed equipment at no additional charge.

3.2 The County reserves the right to pull any number of carts out of service to be put in a pool and utilized for spare parts. When parts are needed for repairs, first priority shall be given to parts from this pool. These carts will be identified by serial number, logged by the County as no longer in service including the date they were removed and transported to the designated repair facility. The Contractor shall have no more than 25 (twenty-five) carts to be utilized for spare parts in storage at anytime. The Contractor shall charge the labor rates established in section 3.4 to remove parts for service and repair of carts. The County shall be responsible for the record keeping and inventory of the parts. In addition, the County shall be responsible for the removal and disposal of any carts not useable as agreed by both parties. At the request of the Contractor, the County shall provide a list of these carts by serial number.

3.3 If a required part is not available on carts removed from service by the County then second priority will be for the Contractor to order the necessary part(s). All required parts to facilitate repairs under this Contract Amendment No.1 shall be charged at a preferred customer rate of the current list price less 50% discount.

3.4 All labor hours in excess of 8 hours per week or 32 hours per month for a four week calendar month and 40 hours per month for a five week calendar month shall be charged at a rate of $45.00 per hour for standard billable working hours between (Mondays – Friday from 6:00AM – 4.00PM). A premium rate shall be charged of $67.50 for non-standard billable working hours between (Monday – Friday from 4:00PM – 6:00AM) including weekends and Contractor holidays.

3.5 No work shall be performed after standard work hours unless authorized by a County representative. If such work is performed without the appropriate authorization the County shall not be responsible for payment. The County shall provide the Contractor with a list of County employees confirmed as designated to provide authorization and the County shall issue a MCSO work order as the request for "out of standard work hours" as a means of authorization.

3.6 All service and repair work shall be provided to the County in the format according to Exhibit 3.

NSL 8/12/08

3.7 In the event the work performance of the Contractor is unsatisfactory, the Contractor will be notified by an authorized agent of the County and be given two (2) business days to correct the work at no additional cost as agreed by both parties.

4.0 Supervision:

4.1 The site supervisor shall be responsible for the competent performance of all services pursuant to this agreement. The site supervisor shall make sufficient routine inspections to insure that all work is performed as specified. The names of all the personnel to be used on this agreement shall be provided to the County within ten (10) days after approval and acceptance by both parties. The County shall provide appropriate means to facilitate the Contractors employee's access to County facilities for the completion of PM's and repairs for ACS Docking Stations only.

5.0 Maintenance and Repair Facility:

5.1 The Contractor shall perform the work under this agreement at a local service facility within the Phoenix, Arizona metropolitan area as agreed to by both parties.

5.2 The Contractor shall be responsible for all the associated costs with the acquisition and operation of the facility.

5.3 The Contractor shall allow the county uninterrupted access to the premises in the presence of an employee of the Contractor during the Contractor standard working hours between (Mondays – Friday from 6:00AM – 2:00PM).

5.4 The County shall receive prior approval from the Contractor to access the premises in the presence of an employee of the Contractor during the Contractor non-standard working hours between (Monday – Friday from 2:00PM – 6:00AM) including weekends and Contractor holidays.

6.0 Technical Training To County Staff:

6.1 The Contractor shall provide technical training to County staff for the specialized equipment they service. These training sessions will be on-request by the County staff.

6.2 The training shall be conducted according to the Contractor's technical and service training program.

6.3 The training will be held at a County facility. Training aids if necessary (i.e., service manuals, etc.) shall be provided by the Contractor in

RSK 5/12/03

electronic format on CD. Equipment used for purposes of training shall be made available from the County's inventory.

6.4 The Contractor shall be given a minimum of thirty (30) days advance notice to prepare, research, and schedule staff in order to provide an adequate presentation.

6.5 Technical training shall be performed during County standard working hours (Monday – Friday from 6:00AM – 4:00PM).

6.6 The County, under a separate purchase order, may purchase additional service manuals.

6.7 The pricing for the training shall be a firm, fixed price of $1,588 daily (8 hours) for one trainer to provide instruction including all travel related costs for no more than three technicians.

7.0 Repair Parts:

7.1 The use of all repair parts shall be per Section 3.3 and 3.4.

7.2 The Contractor shall provide the most current price list of parts as issued.

7.3 The Contractor shall furnish the County a monthly usage report delineating the acquisition activity governed by the Contract. The format of the report shall be approved by the County and shall disclose the quantity and dollar value of each contract item by individual unit.

8.0 County Responsibilities:

8.1 County personnel shall be responsible for identifying the ACT Transport Carts and Racks that have not received PM as indicated by the agreed "marking" process and delivering and retrieving them to and from the designated repair facility where the Contractor representatives will carry out the PM schedule. ACS Docking Stations shall remain in place for associated PMs. The County shall facilitate Contractor access to installation sites and the ACS shall receive "marking" as per the agreed process.

8.2 County personnel shall be responsible for identifying ACT Transport Carts and Racks that require repairs and delivering and retrieving them to and from the designated repair facility where Contractor representatives will carry out the repairs. ACS Docking Stations shall remain in place for repairs unless un-repairable on-site due to restrictions caused by the necessity to work with refrigerant gases or welding equipment. In such

NSH 8/12/05

cases the County shall be responsible for the transportation of equipment to Contractors designated repair facility. The County shall facilitate Contractor access to installation sites and the ACS shall receive "marking" as per the agreed process.

8.3 The County shall make a designated representative available on a weekly basis for a maintenance review meetings with the Contractor site supervisor to determine the status of PM and repairs, sign off on work carried out and agree to action plans as appropriate.

9.0 Term of Agreement:

Contract term shall be effective August 1, 2008 until July 31, 2009. The agreement may be renewed for three (3), one (1) year options as agreed to by both parties. Renewal of contract shall be confirmed a minimum of 60 days prior to contract anniversary date.

10.0 Pricing:

The Contractor shall perform the PM responsibilities per Section 2.0 for a total annual cost of $298,087.79.

11.0 Billing and Documentation:

11.1 Contractor shall submit invoices on a monthly basis and the County shall make payment net 30 days from the date of the invoice. Sales tax shall be based on the applicable retail rate on billable parts.

11.2 The invoice shall include a monthly pro-rated fee for bi-annual PM and charges in support of all work carried out in the preceding month including.

11.2.1 Service work orders-duly authorized and signed by a designated representative of the County. List of authorized designees to be provided by the County.

11.2.2 PM checklists- duly authorized and signed by a designated representative of the County. List of authorized designees to be provided by the County.

11.3 The work flow process for PM and service and repair shall be performed according to Exhibit 4.

NSK 8/12/08

12.0 Existing Service and Repair Issues:

As a result of the heating issues being experienced by the County under its current operational practices and requirements, the County is only able to use the ACS Docking Stations at 80% of capacity in order to obtain required temperatures. This requires additional carts to transport meals thus creating an increased amount of wear and tear on the carts along with increased fuel and labor costs. Therefore, based on the changes to the operational and performance standards established by the County for the ACS Docking Stations, the Contractor, in good faith and with a desire to meet the County's current operational practices and requirements will provide the County service and repairs as identified in 3.0 above on all equipment as identified in 2.1. above and shall discount charges at 20% off the established rates. This arrangement shall be in place under this Contract Amendment No.1 until such time as the heating issues are satisfactorily resolved as agreed by both parties

The undersigned hereby agree to the terms and conditions of the attached service agreement as amended to the contract.

Burlodge, USA Inc.

Neil Kirven, 8/12/08
President Date

Maricopa County Sheriff's Office

Loretta Barkell, 8/14/08
Chief Financial Officer Date

Maricopa County Department of Materials Management

Wes Basinger 8/20/08
Director Date

EXHIBIT 1

:BURLODGE

UK Italy France U.S.A. Canada

PREVENTATIVE MAINTENANCE CHECKLIST - to be performed every six months

Site Location: Date: Model #: Serial #:

ACS Docking Station.

Item #	Completed √	TASK	Parts Required				
			Part #	Description	Qty	Chargeable	Inclusive
1		Check and clean condenser coil, cover and fans					
2		Check and clean evaporator coils, covers and fans					
3		Check and clean compressor cooling fan and finger guard					
4		Check heating elements motors; tighten fan set screws					
5		Check all internal probes and clean as necessary					
6		Check main power connections and mounting hardware					
7		Check and tighten all screws, bolts and hinges					
8		Check and adjust upper and lower door bushings, latches, closing mechanisms and hold open clips					
9		Check and replace all door and frame gaskets as necessary					
12		Check door alignment and correct closure.					
11		Check all electronic components and connections (contactors, cables plugs and connectors) and tighten as necessary					
12		Check proper operation of all functions, cycles, buzzer, prgtam and clock settings					
13		Remove all visible dust from electrical components by vacuum or compressed air					
14		Check touch pad cover and membrane to ensure display function correctly					

Comments:

Signature of Technician:

8/12/08

EXHIBIT 2

BURLODGE

UK Italy France U.S.A. Canada

PREVENTATIVE MAINTENANCE CHECKLIST - to be performed every six months

Site Location: Date: Model #: Serial #:

ACT Transport Cart

Item #	Completed √	TASK	Parts Required				
			Part #	Description	Qty	Chargeable	Inclusive
1		Check castors brakes function correctly, reset as necessary.					
2		Check castor wheels are free from obstruction and not damaged.					
3		Check and tighten castor retaining nuts and remove entangled rop strings or other materials and generally clean as necessary					
4		Check and replace door and frame gaskets as necessary					
5		Check and re-secure perimeter bumper as necessary					
6		Check door alignment and correct closure.					
7		Check door hinges and adjust upper and lower door bushings, Latches, closing mechanisms and hold open clips as necessary.					
8		Check for broken welds and repair as required.					
		ACT Transport Support Rack					
1		Check for broken frame and tray support guide welds and repair as required.					
2		Clean bottom nylon slides and lubricate with food grade silicon. Replace as necessary.					
3		Check and tighten top and bottom frame thermal break.					
4		Check thermal barrier dividers and gaskets, replace as necessary.					

Comments:

Signature of Technician:

NSL 8/12/05

EXHIBIT 3

BURLODGE

UK | Italy | France | U.S.A. | Canada

REPAIR WORK DOCKET

Site Location: Date: Model #: Serial #:

Repair Authorised By:

Title:

Type of Equipment: (Please Check - √)

ACS Docking Station
ACT Transport Cart
ACT Tray Support Rack

Item #	Completed √	Nature of Repair	Parts Required				
			Part #	Description	Qty	Chargeable	Inclusive
1							
2							
3							
4							
5							
6							
7							
9							
12							
13							
14							

Time Job Started: Time Job Finished: Total Hours

Note: Time stated in military time

Comments:

Signature of Technician:

MSL 8/12/08

EXHIBIT 4

:BURLODGE

UK | Italy | France | U.S.A. | Canada

MARICOPA COUNTY DOCUMENTATION FLOW

Preventative Maintenance
(Six Monthly Intervals)

ACS (Docking Station)

ACS identified / scheduled for PM via "master" spreadsheet by Burlodge site supervisor

PM carried out at installation site

PM Checklist completed and signed by Technician upon completion of PM

Preventative Maintenance
(Six Monthly Intervals)

ACT (Transport Cart and Tray Support Rack)

ACT and Rack identified as needing PM to Maricopa County personnel with use of individual cart/rack marking. Equipment is removed from rotation and delivered to Burlodge maintenance work shop by Maricopa County personnel

Checklist attached to cart upon arrival in work shop

PM Checklist removed from cart, completed and signed by Technician upon completion of PM

Record of Checklist entered into "master" PM spreadsheet by on-site supervisor

Repairs required other than standard PM noted - Repairs for approval to repair made

All individual PM checklists held on file in Burlodge site office for audit purposes

"Master" PM spreadsheet emailed to Burlodge Winston Salem office at the end of each month

Monthly Base Contract (Preventative Maintenance) invoice - 1/12 of annual fee - generated and sent to Maricopa County with accompanying "master" PM spreadsheet

Repairs / Maintenance
(As required)

ACS (Docking Station) & ACT (Transport Cart Tray Support Rack)

Repair need identified by service call from a County officer (ACS) or during rotation through sanitation area.

Designated County personnel authorizes work docket prior to work being carried out.

ACS
Service Repair carried out at installation site

ACT Cart
delivered to Burlodge maintenance work shop by Maricopa County personnel

ACS Work
Docket completed and signed by Technician upon completion of repair

ACT Work
Docket attached to cart upon arrival in work shop

ACT Work
Docket completed and signed by Technician upon completion of repair

Record of Checklist entered into "master" Service Repairs spreadsheet by on-site supervisor detailing labor hours and parts used

All individual Service Repairs checklists held on file in Burlodge site office for audit purposes

"Master" PM spreadsheet emailed to Burlodge Winston Salem office at the end of each month for invoice calculations

Monthly Service Repairs (Parts and Labor) invoice generated and sent to Maricopa County with accompanying "master" Service Repairs spreadsheet

Maricopa County processes invoice and issues payment - net 30 days

NSL 5/12/08

The effective date of amendment No. 2 is 11/01/08

FOOD RETHERMALIZATON SYSTEM
01134-RFP
CONTRACT AMENDMENT NO.2

This amendment is to the preventative maintenance (PM) and service and repair agreement between Maricopa County (County) and Burlodge USA Inc. (Contractor) under contract 01134-RFP effective August 1, 2008. The contract shall be amended as follows.

1.0 The end of Section 8.3 shall now read:

The County shall have the option of authorizing the Contractor to perform the needed repairs; to perform the repairs by the County or not to perform the repairs at all. Any repair work not included as preventative maintenance (PM) shall require prior authorization from a designated representative of the County according to Exhibit 4.

2.0 Except as amended herein, all other terms and conditions of the contract shall remain unchanged.

3.0 This amendment shall be effective November 1, 2008

The undersigned hereby agree this amendment as described herein.

Burlodge, USA Inc.

Neil Kirvin, 11/18/08
President Date

Maricopa County Sheriff's Office

Loretta Barkel, 11/19/08
Chief Financial Officer Date

Maricopa County Department of Materials Management

Wes Basinger 11/24/08
Director Date

Effective 08/01/08

:: BURLODGE

Burlodge USA, Inc
3700 Industrial Drive
Winston-Salem, North Carolina 27115
Tel: (336) 776-1010 Fax: (336) 776-1090
Email: info@burlodgeusa.com

Quotation

Maricopa County Sheriffs Office
3250 West Lower Buckeye Road
Phoenix, AZ 85005
Attn: Lt. Robert Barcelo

Quote No: MCC7/nsk/01.14.09 - Item Pricing Ammendment

Original Date : May 31, 2008 Ammended: January 14, 2009

Product Description	Code No	Tax Rate	Equipment Price	Installation Cost	Freight Estimate	Warranty Cost	Net Price	Qty	Equipment Price	Tax	Installation	Freight	Warranty	Total
	Item Totals Exclusive of Tax								Item Totals Inclusive of Tax					
Equipment Pricing														
ACS-40 Correctional Docking Station. 480/3/60 cycle Water cooled as per plans and specifications. Best and final and changes as per factory inspection & testing.	BLCOG645	0.081	17,525.71	451.56	494.00		18,471.27	1	17,525.71	1,419.58	451.56	494.00		19,890.85
Sneeze for Docking Station	BLCOA070	0.081	637.00				637.00	1	637.00	51.60				688.60
ACT-40Correctional Isolbex Insulated transport cart as per and specifications. Best and final and changes as per factory inspection & testing, includes 8" swivel casters	BLCOA007	0.081	7,893.80	56.00	344.08		8,293.88	1	7,893.80	639.40	56.00	344.08		8,933.28
ACC-40 Prison tray transfer rack included	BLCOG.007													
Sub Totals														
Applicable Tax (8.1%)														
Tray Pricing														
Correctional Tray. One Piece - Hot & Cold Tray - PSSU Material	BLC00.000.01	0.081	58.71		0.29		59.00	1	58.71	4.8		0.29	-	63.78
Sub Totals														
Applicable Tax (8.1%)	Tax Rate													

Comments:
The above prices are quoted net FOB Burlodge Factory, Bergamo Italy (source orgin) and an estimate of freight is included as a separate line item
The above prices include all duties and import taxes as required by US customs
Prices are quoted net all applicable taxes and taxes are shown as extra line items where applied
A separate line item cost for installation and setting into place is included as a extra cost.

Ammendment: Prices are firm for 40 days from date quoted for orders received between August 1st 2008 to July 31st 2009 and for requested delivery no later than December 31st 2009.
Prices are net 30 days with 2% discount for payment 10 days from delivery to Maricopa.

SPECIAL NOTE:

Orders for Item BLC00.000.01 - Correctional Tray - will be subject to the following:

Orders received for up to 5,000 trays in number, received between January 1st and July 1st 2009 will be subject to an additional special discount of $3.00 per tray.

Authorized By: Neil Kirven, President, Burlodge USA inc

Date: 01/14/09

Accepted By: Loretta M. Barkell, On Behalf of Maricopa County Sheriff's Office

Printed Name: LORETTA M. BARKELL

Date: 2/6/09

BURLODGE USA INC, 3760 INDUSTRIAL DRIVE, WINSTON-SALEM, NC 27105
~~PO BOX 4088, 3760 INDUSTRIAL DRIVE, WINSTON-SALEM, NC 27115-4088~~

Note:

Bonding for the optional items are not included in this "Best and Final Offer" due to the varied content of each option offered with in this proposal.

The optional pricing shown above, items 1 to 9 if included in the contract would be subject to additional cost of Bonding where applicable and depending on the Counties decision regarding the bonding period.

All applicable taxes are extra to this proposal

NIGP CODE 1654701

Terms:	2% 10 DAYS; NET 30
Vendor Number:	**W000003155 X**
Telephone Number:	336-776-1010
Fax Number:	336-776-1090
Contact Person:	**Diane Hinnant**
E-mail Address:	**tmumpower@burlodgeusa.com**
Company Website:	www.burlodgeusa.com
Certificates of Insurance:	Required
Performance Bond Required:	$7,400,000.00
Contract Period:	To cover the period ending ~~JUNE 30, 2007~~ **July 31,** ~~2007~~ **2012.**