Food Establishments

Environmental Health Division

Annual Event Food Establishment
(Previously Known as Special Event Food Establishment)

Definition

"Annual Event Food Establishment" means a food establishment that operates in conjunction with one event that operates for not more than one-hundred twenty (120) consecutive days. Annual Event Food Establishment permits are issued for one (1) year to vendors operating at multiple Department-approved events.

Additional permit requirements

The Annual Event Food Establishment Permit is limited to food preparation that is simplified to reduce excessive steps so as to ensure contamination does not occur. Excessive steps include, but are not limited to, cooking overnight without oversight, cooling, or the cutting of large volumes of food items . These complex/excessive steps may be conducted only in an approved in a commissary or other permitted permanent "fixed" food establishment.

All produce must be purchased commercially pre-washed or be washed in advance at a permitted permanent "fixed" food establishment/commissary.

All time/temperature control for safety foods shall be prepared on the same day of sale or service. Time/temperature control for safety foods shall not be held over from a previous day's operation unless otherwise approved by the Department.

All food held for consumer self-service shall be wrapped or effectively dispensed to protect from contamination.

All annual event food establishments operating at an event greater than 14 days in duration shall operate in conjunction with an onsite commissary or fixed food establishment, unless alternate Department approval is obtained in advance.

When operating at farmers markets, swap meets and recurring school functions the following additional requirements shall be met:

- ◊ The event must have a designated responsible person/coordinator.
- ◊ Food service will generally be limited only to assemble-serve, heat-serve, cook-serve, and/or hold-serve.
  *Approval for limited on-site food assembly may be granted by the Department following application review.
- ◊ All food preparation (breading, chopping, mixing, marinating, etc.) must take place at permitted permanent "fixed" food establishment or commissary.

Vendors are required to notify the Mobile Food/Special Events Program prior to attending **every** event at least 7 days prior to the event.

Plan review submittal requirements

- ◊ Complete set of plans to scale that are legible on 8.5"X11" paper
- ◊ Pictures of booth layout
- ◊ Plan Review Fee ($75/unit—standard review; $150/unit—expedited review)
- ◊ Proposed Menu (describe concepts)
- ◊ Top View Layout/Equipment (including food equipment, hand sink, food storage compartments, and food prep area)
- ◊ Indicate if using a self contained hand wash sink (recommended) or temporary hand wash set up

  Requirements for self contained hand wash sink include:

  - ◊ Side View Plumbing Schematic of self contained hand sink or temporary hand wash set up
  - ◊ Fresh Water Tank Dimensions (minimum 5 gallons for handwashing)
  - ◊ Waste Water Tank Dimensions (minimum 15% greater than the fresh water tank)
  - ◊ Hand Wash Sink Dimensions (minimum 9" x 9"x 5")
  - ◊ Combination mixing faucet of hot & cold water at the sink with flow rate of one-half gallon per minute
  - ◊ Fresh Water inlet at least ¾ inch
  - ◊ Waste water drain valve greater than 1 inch
  - ◊ All plumbing connections shall be different sizes
  - ◊ Waste water tank on drain at lowest point of tank
  - ◊ Water continuous & evacuated by opening valve
  - ◊ Tanks fill connection at top or higher point

  Requirements for temporary hand wash set up include:

  - ◊ Minimum 5-gallon insulated container for potable water (multiple containers may be used)
  - ◊ 15% or greater waste water catch basin (multiple containers may be used and a lid is recommended so that waste water does not spill during transport)
  - ◊ Soap and paper towels
- ◊ NSF or FDA approved water hose (food grade)
- ◊ Water heater or other approved hot water source
- ◊ Design & construction materials used
- ◊ Food contact surface materials
- ◊ Food Protection, Sneeze-Guards
- ◊ Storage equipment/steam table
- ◊ All Equipment NSF/ANSI approved
- ◊ Lighting (50-ft candles)

Note: Once the plans have been reviewed, a stipulation approval letter will be sent to you and detail any modifications/additional information that may be required. Once all items have been received, an inspection can be scheduled at the Mobile Food/Special Events office.

*If found during operation that the establishment is unable to maintain a temporary hand wash set up, a self contained hand wash sink may be required.

Prior to the issuance of the permit, the inspector will verify construction/layout meets code requirements in addition to reviewing/verifying the following have been provided:

- ◊ If owner has more than one permitted establishment each establishment must bear a unique identifier (e.g. Booth #1, etc.)
- ◊ Commissary Agreement
- ◊ Event/Farmers' Market locations planning to attend
- ◊ Certified Manager Certificate
- ◊ Thermometers
- ◊ Generators/Power Source
- ◊ Pictures of Annual Special Event Food Establishment layout/set-up

Inspection information

- ◊ Inspections are conducted at the Mobile Food/Special Events Office
- ◊ Appointments may be scheduled between 8AM-11AM, Monday – Friday
- ◊ Inspections are conducted (without appointment) between 12PM-5PM
- ◊ A permit will be issued once all items have been verified and approved for use.

Permit renewal information

- ◊ Renewals are done at the Mobile Food/Special Events Office
  - ◊ Appointments may be scheduled between 8AM-11AM, Monday – Friday
  - ◊ Inspections are conducted (without appointment) between 12PM-5PM
- ◊ The following must be brought to office for renewal:
  - ◊ All equipment including booth setup
  - ◊ Commissary Agreement
  - ◊ List of events/locations (farmers markets, swap meets) where planning to operate
  - ◊ Thermometers
  - ◊ Generators/Power Source
  - ◊ Updated menu

Permit fees

- ◊ Permits are issued for 1 year
  - ◊ 1 year - $180

Plan Submittal Example

Booth Layout:

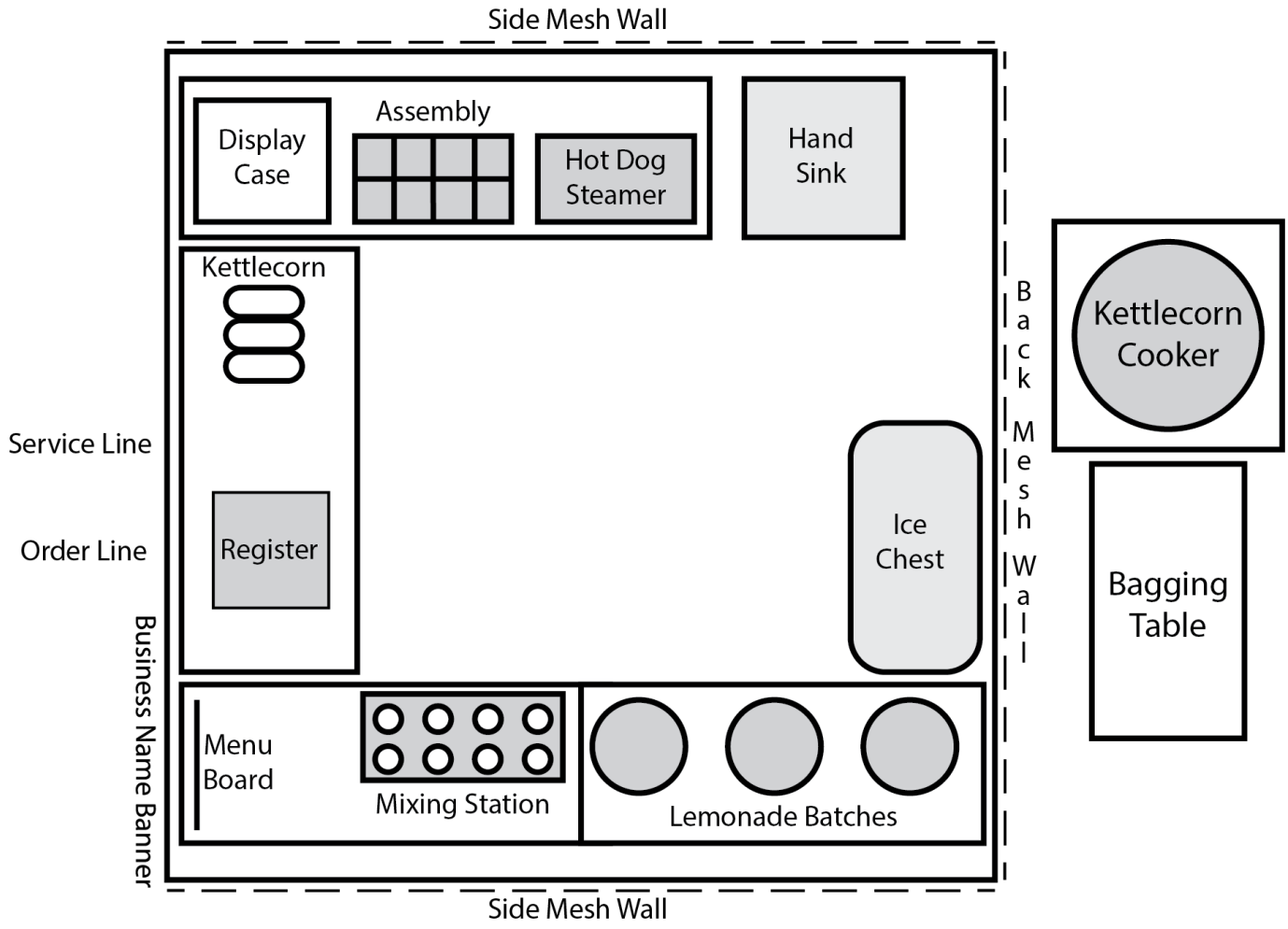

Plan Submittal Example

Hand sink schematics (for self-contained hand sink):

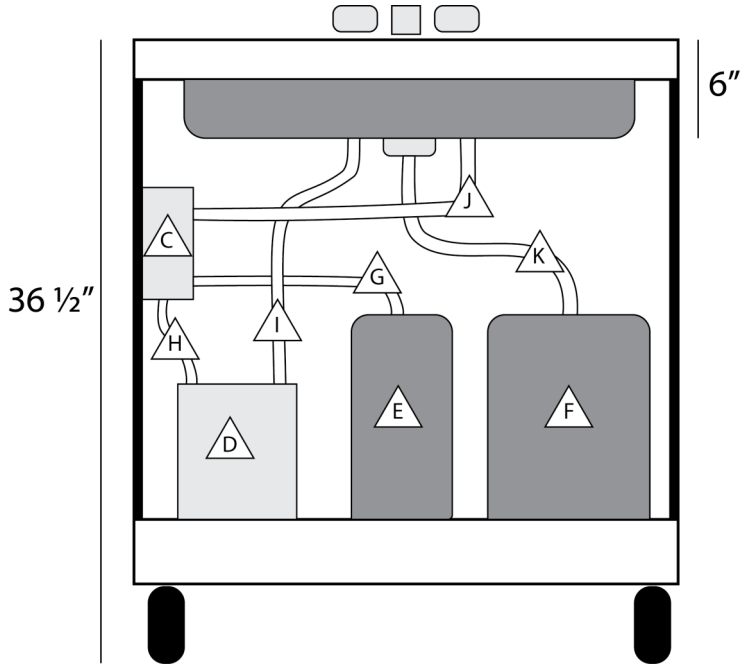

A	Sink Faucet - Hot & Cold
B	Sink Basin - 22 Gauge S.S., NSF, 12 3/4″ W x 21″L x 6″D
C	Water Pump - > 1/2 gal/min
D	Water Heater - Electric or Propane
E	Fresh Water Tank - 5 Gallons
F	Gray Water Tank - 6 Gallons
G	Cold Water Line from Fresh Water Tank to Water Pump
H	Water Heater Supply Line
I	Hot Water Line to Sink Faucet
J	Cold Water Line to Sink Faucet
K	Wastewater Line to Gray Water Tank

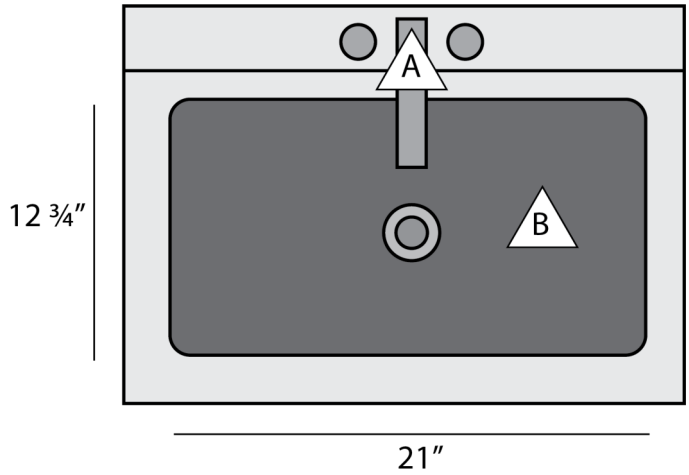

Plan Submittal Example

Temporary hand wash station set-up (multiple containers may be used to achieve minimum requirements (2-2.5 gallon fresh water containers, 2-5 gallon waste containers, etc.):

Mobile Food/Special Events Office
1645 E. Roosevelt Street
Phoenix, AZ 85006
602.506.6872
esplanreview@mail.maricopa.gov