wood.

Third Quarter 2018 Status Report
Maricopa County Cave Creek Landfill
Phoenix, Arizona

Prepared on behalf of:

Maricopa County Risk Management
222 North Central Avenue, Suite 1110
Phoenix, Arizona 85004

and

Maricopa County Waste Resources & Recycling
2919 West Durango Street
Phoenix, Arizona 85009

Prepared by:

Wood Environment & Infrastructure Solutions, Inc.
4600 East Washington Street, Suite 600
Phoenix, Arizona 85034

Registered Professional Engineer (Civil)
CERTIFICATE NO.
63610
EMILY H. LODOLCE
DATE SIGNED 12/13/18
ARIZONA U.S.A.
Expires:03/31/20

December 13, 2018

Project No. 14-2017-2034

TABLE OF CONTENTS

		Page
EXECUTIVE SUMMARY		ES-1
1.0	INTRODUCTION	1
2.0	SUMMARY OF MEASURES TAKEN TO IMPLEMENT THE RAP	1
3.0	DATA COLLECTED DURING THE REPORTING PERIOD	2
3.1	Groundwater Elevations	2
3.2	Groundwater Quality Monitoring	3
3.3	Soil Vapor Monitoring	3
3.4	SVE System Performance Monitoring	4
4.0	DISCUSSION OF COLLECTED DATA	5
4.1	Groundwater Elevations	5
4.2	Groundwater Quality	5
4.3	Soil Vapor	6
4.4	SVE System Performance	6
5.0	FUTURE ACTIVITIES	7
6.0	REFERENCES	8

LIST OF TABLES

Table 1 Well Construction Summary
Table 2 Groundwater Elevation, Gradient, and Flow Direction
Table 3 Groundwater Analytical Results – Summary of VOC Data
Table 4 Groundwater Analytical Results – Summary of General Chemistry Data
Table 5 Groundwater Analytical Results – Summary of Metals Data
Table 6 Soil Vapor Analytical Results – Wellhead TO-15 Analysis Data
Table 7 Soil Vapor Analytical Results – Process Sample TO-15 Analysis Data
Table 8 Soil Vapor Extraction Mass Removal

LIST OF FIGURES

Figure 1 Well Map
Figure 2 Estimated Extent of TCE Plume in Groundwater – August 2018
Figure 3 Shallow Zone TCE Soil Vapor Concentrations – September 2018
Figure 4 Middle Zone TCE Soil Vapor Concentrations – September 2018
Figure 5 Deep Zone TCE Soil Vapor Concentrations – September 2018
Figure 6 Above Water Table TCE Soil Vapor Concentrations – September 2018
Figure 7 Deep Zone 1,1-DCE Soil Vapor Concentrations – September 2018
Figure 8 SVE System Process Flow Diagram
Figure 9 Mass Removal of VOCs – through September 2018

LIST OF APPENDICES

Appendix A Laboratory Reports of Analysis

LIST OF EXHIBITS

Exhibit 1 Cave Creek Landfill Progress Schedule

Registered Professional Engineer (Civil)
CERTIFICATE NO. 63610
EMILY H. LODOLCE
DATE SIGNED 12/13/18
ARIZONA U.S.A.
Expires:03/31/20

EXECUTIVE SUMMARY

In response to the detection of elevated levels of trichloroethene (TCE) in groundwater underlying Cave Creek Landfill, Maricopa County entered into a Consent Order in 1999 with the Arizona Department of Environmental Quality to characterize the nature and extent of site groundwater contamination, develop a Remedial Action Plan (RAP) to address contamination impacts, implement the RAP, and provide quarterly status updates on project activities. This status report documents site assessment and remediation efforts conducted pursuant to the RAP during the third calendar quarter of 2018 (July through September 2018).

Groundwater Data Collection and Discussion. Quarterly groundwater levels were monitored on August 13 through August 15, 2018. During the reporting period, the predominant direction of groundwater flow was 177.5 degrees from north with a gradient of 0.002 feet per foot. Groundwater elevations at the site stayed relatively constant from May 2018 to September 2018. This is a change from recent quarters, as previously groundwater elevations had been declining by an average of 1 to 2 feet per year. Maricopa County collected quarterly groundwater samples on August 13 through August 15, 2018. The analytical results from the Third Quarter 2018 indicate that the highest concentrations of TCE underlie the southern and western portion of the New Landfill (near TSSV-03-PZ and MW-10). The concentration of TCE in the original and duplicate samples collected from TSSV-03-PZ were 260 and 300 µg/L, respectively. TCE concentrations in TSSV-03-PZ reached the highest observed levels in the third and fourth quarters of 2017 and have declined since, suggesting that the higher concentrations previously observed at this well may have migrated to the south. The TCE concentration in the sample collected from MW-02, 1,200 feet downgradient of TSSV-03-PZ, was 83 µg/L, which is comparable to the previous quarter's concentration of 87 µg/L. The concentration of TCE in the sample collected from MW-10 was 350 µg/L. TCE is present above the Arizona Water Quality Standard (AWQS) for TCE of 5 µg/L in off-site downgradient wells MW-05 (42 µg/L) and MW-07 (36 µg/L). TCE concentrations in the original and duplicate samples collected from MW-08, in the southern portion of the Old Landfill, were 130 and 130 µg/L, respectively, comparable to the previous two quarters' observed concentrations of around 150 µg/L.

Soil Vapor Data Collection and Discussion. Maricopa County collected quarterly soil vapor samples from September 6, 2018 through September 12, 2018. The analytical results from the Third Quarter 2018 indicate that TCE concentrations in soil vapor samples collected from the shallow zone were 40 milligrams per cubic meter (mg/m^3) or less. In the middle zone, the TCE concentration in the sample from TSSV-01-M (27 mg/m^3) continued to decline from the previous two quarters, while samples from TSSV-02-M and SVE-01-M showed increasing concentrations of TCE (130 mg/m^3 and 48 mg/m^3, respectively) compared to the previous two quarters. The highest TCE concentrations in the deep zone were observed in TSSV-01-D, TSSV-07-D, and SVE-04, with concentrations of 310 mg/m^3, 490 mg/m^3, and 390 mg/m^3, respectively. TCE concentrations in soil vapor in the above water table zone were highest in the original and duplicate samples collected from MW-09, at 760 mg/m^3 and 980 mg/m^3, respectively; these were also the highest observed concentrations of TCE in site soil vapor during this quarter.

SVE System Performance. Based on the results of the SVE system performance sampling on August 15, 2018, the soil vapor treatment system captured or destroyed over 99.0% of extracted volatile organic compounds (VOCs), as defined by Maricopa County Air Quality Department Rule 100 Section 200.113, and over 81.6% of Federal Hazardous Air Pollutants, during the reporting period. The calculated total mass of VOCs removed from the vadose zone since full-scale SVE system startup on September 15, 2015 is 33,871 pounds (lbs). During the Third Quarter 2018, the SVE system removed 3,876 lbs of VOCs, which is equivalent to a daily mass removal rate of approximately 43 lbs per day.

1.0 INTRODUCTION

In response to the detection of elevated levels of trichloroethene (TCE) in groundwater underlying Cave Creek Landfill, Maricopa County entered into a Consent Order (CO) in 1999 with the Arizona Department of Environmental Quality (ADEQ) to characterize the nature and extent of site groundwater contamination. Since that time, the CO has been revised based on the results of multiple site investigations, and the current CO (ADEQ Identification Number 30604, Docket No. S-2-10) requires Maricopa County to complete groundwater characterization, develop a revised Remedial Action Plan (RAP), and complete ADEQ-approved remedial activities (ADEQ, 2010). Maricopa County submitted the final version of the RAP in May 2016 which includes soil vapor extraction (SVE) to address TCE-impacted vapor that serves as a source of groundwater contamination and an on-site pump and treat groundwater system to contain and remediate the existing groundwater plume (Amec Foster Wheeler Environment & Infrastructure, Inc. [Amec Foster Wheeler], 2016). ADEQ approved the RAP in their letter dated November 23, 2016 (ADEQ, 2016a).

Section IV of the CO requires quarterly status reports to document Maricopa County's progress implementing the stipulations of the CO and provide evidence of regulatory compliance (ADEQ, 2016b). This status report documents site assessment and remediation efforts conducted pursuant to the RAP during the third calendar quarter of 2018 (July through September 2018).

Wood Environment and Infrastructure Solutions, Inc. (Wood) prepared this quarterly report on behalf of Maricopa County Risk Management and Maricopa County Waste Resources & Recycling under the terms and conditions of Environmental Services Contract 13134-ITN.

2.0 SUMMARY OF MEASURES TAKEN TO IMPLEMENT THE RAP

Activities conducted in support of RAP implementation during the reporting period are as follows:

- Maricopa County collected quarterly groundwater levels on August 13 through August 15, 2018.
- Maricopa County collected quarterly groundwater samples on August 13 through August 15, 2018.
- Xenco Laboratories, an environmental laboratory certified by the Arizona Department of Health Services (ADHS) (certification number AZ0757), analyzed the groundwater samples.
- Maricopa County collected quarterly soil vapor samples on September 5 through September 8, September 10, and September 12, 2018.
- Airtech Environmental Laboratories (AEL), an environmental laboratory certified by the ADHS (certification number AZ0740), analyzed the soil vapor samples for volatile organic compounds (VOCs) in air by United States Environmental Protection Agency (EPA) Method TO-15.
- Maricopa County collected monthly SVE system performance samples on July 18, August 15, and September 19, 2018.
- AEL analyzed the monthly SVE system performance samples for VOCs in air by EPA Method TO-15.
- On behalf of Maricopa County, Wood submitted the quarterly SVE system performance report for compliance with the Maricopa County Air Quality permit on September 14, 2018.
- The SVE system operated in the Third Quarter 2018 from July 2 to September 30, 2018.
- Maricopa County completed the following activities with regards to the design, permitting, and construction of the Groundwater Treatment System (GWTS):

  - Submitted Phase 2 (pipeline) draft design plans to ADEQ and the City of Phoenix for review;
  - Initiated clarifications and changes to plans based on comments received from ADEQ;
  - Contracted with ASR Resources for manufacturing a specialty flow control valve for future injection well IW-01;
  - Received GWTS construction bids and conducted a bid walk with prospective contractors; and
  - Selected a contractor for construction of Phase 1 of the GWTS.

- Maricopa County advanced the Summer 2018 Drilling Program through completion of the following activities:
  - Coordinated Notices of Intent to Drill for planned monitoring wells;
  - Initiated site preparation and drilling of MW-12, located east of the retention basin on the New Landfill property. Drilling began at MW-12 on August 12, 2018 and was completed on August 29, 2018.
  - Obtained an extended work hours permit for 24/7 drilling at MW-11 on the Sonoran Preserve.
  - Initiated site preparation activities at MW-11. Work began at MW-11 on July 18, 2018 with the improvement of the existing access road and gate. Drilling began at MW-11 on September 19, 2018 and continued through the end of the reporting period.
- Maricopa County completed the following activities supporting the construction, drilling, and testing of IW-01, located on COP property on Sleepy Ranch Road:
  - Notified ADEQ that the start of drilling IW-01 was postponed until January 2019 due to a conflict with driller start dates; and
  - Prepared an updated community notice flyer regarding the IW-01 schedule and distributed it for internal review prior to sending it to the public.

Exhibit 1 summarizes the progress of activities programmed for Cave Creek Landfill RAP implementation. The schedule has been updated with the current status of project tasks including the postponement of the injection well drilling program until early 2019 due to scheduling constraints with the driller and an effort not to drill in the neighborhood during the holidays. The revised schedule projects that construction of Phase 1 will begin in early 2019 and routine GWTS operations will begin in early 2020.

3.0 DATA COLLECTED DURING THE REPORTING PERIOD

3.1 Groundwater Elevations

On behalf of Maricopa County, Wood collected quarterly groundwater levels on August 13 through August 15, 2018. Locations and construction details of site wells are presented in **Figure 1** and **Table 1**, respectively. Groundwater elevations and the calculated groundwater flow direction and gradient for the reporting period are presented in **Table 2**. Contoured water table elevations and the calculated flow direction and gradient are also shown in **Figure 2**. During the reporting period, the direction of groundwater flow was 177.5 degrees from north with a gradient of 0.002 feet per foot (ft/ft). As in previous quarters, the groundwater elevation at TSSV-04-PZ appeared anomalously low and was not used in the flow direction and gradient calculations or contouring of the water table surface.

3.2 Groundwater Quality Monitoring

Maricopa County conducts groundwater quality monitoring at the Cave Creek Landfill in accordance with the requirements of 40 Code of Federal Regulations (CFR) 258.50, as detailed in the Post-Closure Care Plan for Maricopa County Solid Waste Landfills (Post-Closure Care Plan) (Hydro Geo Chem, 2014). Groundwater samples from applicable Cave Creek Landfill wells are collected and analyzed for VOCs on a quarterly basis (typically February, May, August, and November). Based on correspondence with ADEQ, Maricopa County is also evaluating quarterly samples for naphthalene, a 40 CFR 258 Appendix II constituent, at compliance wells (i.e., MW-02, MW-03, MW-04, MW-05, MW-06, MW-07, MW-08, and PW) to assess its presence at the site (email communication with ADEQ, 2017). The naphthalene samples are analyzed using EPA Method 8270C SIM, which allows for a lower laboratory reporting limit than analysis with EPA Method 8260B. Evaluation of naphthalene using EPA Method 8270C SIM began in the Third Quarter of 2017 and is projected to end in the Third Quarter of 2018. In addition to the evaluation of organic constituents, Maricopa County also samples compliance wells semi-annually for 40 CFR 258 Appendix I inorganic constituents (i.e., metals) and general chemistry parameters.

Wood, on behalf of Maricopa County, collected quarterly groundwater samples on August 13 through August 15, 2018. In addition to the compliance wells noted above, the following site wells were sampled: EW-01, MW-09, MW-10, TSSV-02-PZ, TSSV-03-PZ, TSSV-04-PZ, TSSV-05-PZ, TSSV-06-PZ, and TSSV-07-PZ.

Samples were collected using passive sampling devices (i.e., passive diffusion bags [PDBs]). The sampling devices were deployed in May of 2018 during the Second Quarter 2018 groundwater sampling event. VOCs at all wells were sampled between August 13 and August 15, 2018.

Xenco analyzed the groundwater samples for VOCs in water by EPA Method 8260. Samples collected from the compliance wells were additionally analyzed for naphthalene by EPA Method 8270C SIM. Laboratory results of analyses for samples collected during the reporting period are included in **Appendix A**.

Groundwater analytical results for the Third Quarter 2018 are presented in **Tables 3**, **4**, and **5**. The estimated extent of the TCE plume in groundwater and results of sampling at individual wells are shown in **Figure 2**.

3.3 Soil Vapor Monitoring

Maricopa County conducts quarterly soil vapor monitoring at the Cave Creek Landfill to evaluate the concentration and extent of contaminated soil vapors in the vadose zone. Wood, on behalf of Maricopa County, collected quarterly soil vapor samples from 42 site wells on September 5 through September 8, September 10, and September 12, 2018.

Wood collected the soil vapor samples using laboratory-supplied 1.0-liter passivated vacuum canisters. AEL analyzed the soil vapor samples for VOCs in air by EPA Method TO-15. Soil vapor analytical results for the Third Quarter 2018 are presented in **Table 6**. The estimated extent of the TCE plume in soil vapor in the shallow, middle, deep, and above water table zones is shown in **Figures 3**, **4**, **5**, and **6**, respectively. The estimated extent of 1,1-Dichloroethene (1,1-DCE) in soil vapor in the deep zone is shown in **Figure 7**. Laboratory results of analyses for samples collected during the reporting period are included in **Appendix A**.

3.4 SVE System Performance Monitoring

The SVE system is part of the remedy identified in the RAP and provides source control (extraction of contaminated soil vapors) at the site. During the reporting period, the system continuously extracted vapor from SVE-03 and SVE-04 from July 2 to September 30, 2018 with a short manual shutdown from August 27 through September 5, 2018. Other system shutdowns during this time were of shorter duration and a result of manual shutdowns in advance of Granular Activated Carbon (GAC) vessel changeouts. The Carbon Adsorption System (CAS) treated the extracted vapor under pressurized flow (**Figure 8**).

The SVE system consists of three GAC vessels, identified as C1, C2, and C3, and one Hydrosil (i.e., potassium permanganate impregnated media) vessel, identified as H1. During routine operation, two GAC vessels are operated in lead/lag series configuration and the Hydrosil vessel is operated as the third and final vessel in the series. The remaining GAC vessel is a standby (offline) vessel and is placed into service as a lag vessel when the lead GAC vessel is spent and removed from service. During a change-out event, the lag vessel is moved into the lead position and the standby vessel is moved into the lag position. GAC is replaced in the former lead vessel and it becomes the new standby vessel.

Twelve GAC vessel change-outs were conducted during the reporting period. The change-outs occurred on the following dates:

- July 11, 2018
- July 18, 2018
- July 25, 2018
- August 1, 2018
- August 8, 2018
- August 15, 2018
- August 22, 2018
- August 27, 2018
- September 5, 2018
- September 10, 2018
- September 17, 2018
- September 26, 2018

No Hydrosil change-out occurred in the Third Quarter 2018.

Discharge of treated effluent from the SVE system is permitted by Maricopa County Air Quality Permit 980398 (Maricopa County Air Quality Department, 2016a). Under this permit, Maricopa County is required to collect monthly samples to calculate 12-month rolling total emissions and quarterly performance samples to demonstrate compliance with the site air quality permit. Wood collected monthly process samples on July 18 and September 19, 2018 and the monthly and quarterly performance sample on August 15, 2018. Process samples were collected with laboratory-supplied 1.0-liter passivated vacuum canisters at four locations: entering the CAS (at sample port [SP]-01), after the lead carbon vessel (at SP-02), after the lag carbon vessel (at SP-03), and after the Hydrosil vessel (at SP-04). These samples are named using the following convention: the sample port (e.g., SP-02) – the vessel that is monitored (e.g., C1 or H1) – the sample date in MMDDYY format. Sample locations are shown in **Figure 8**.

AEL analyzed the process samples for VOCs in air by EPA Method TO-15. Results of the process sample analysis are presented in **Table 7**. Laboratory results of analyses for samples collected during the reporting period are included in **Appendix A**.

4.0 DISCUSSION OF COLLECTED DATA

4.1 Groundwater Elevations

Groundwater elevations measured in the Third Quarter of 2018 at the site were comparable to measurements from recent quarters. Compared to one year ago (Third Quarter 2017), the average groundwater elevation across the site increased by 0.29 ft. This average reflects both increasing and decreasing water levels; for example, the water level at MW-05 increased by 0.79 ft while the water level at TSSV-03-PZ decreased by 0.51 ft. Groundwater flow direction continues to be nearly due south (177.5 degrees from north) and the gradient is 0.002 ft/ft. In previous years, there has been a declining trend in groundwater elevations at the site on the order of one to two feet per year. The arrested decline in average site-wide groundwater elevations could suggest an off-site influence that is contributing recharge to the aquifer, possibly the City of Phoenix Aquifer Storage and Recovery wells along Cave Creek Road, or that the rate of groundwater extraction by nearby public utilities has declined. While this trend has been noted for the past three quarters, more groundwater elevation data are needed to evaluate whether this change is temporary or long-term.

4.2 Groundwater Quality

The analytical results from the Third Quarter 2018 indicate that the highest concentrations of TCE underlie the southern and western portion of the New Landfill (near TSSV-03-PZ and MW-10). The concentration of TCE in the original and duplicate samples collected from TSSV-03-PZ were 260 and 300 µg/L, respectively. TCE concentrations in TSSV-03-PZ reached the highest observed levels in the third and fourth quarters of 2017 and have declined since, suggesting that the higher concentrations previously observed at this well may have migrated to the south. The TCE concentration in the sample collected from MW-02, 1,200 feet downgradient of TSSV-03-PZ, was 83 µg/L, which is comparable to the previous quarter's concentration of 87 µg/L. The concentration of TCE in the sample collected from MW-10 was 350 µg/L (comparable to concentrations detected in the First and Second Quarters of 2018, which were 380 µg/L and 300 µg/L, respectively).

TCE is present above the Arizona Water Quality Standard (AWQS) for TCE of 5 µg/L in off-site downgradient wells MW-05 (42 µg/L) and MW-07 (36 µg/L). TCE concentrations in the original and duplicate samples collected from MW-08, near the southern boundary of the Old Landfill, were 130 and 130 µg/L, respectively, comparable to the previous two quarters' observed concentrations of around 150 µg/L.

Co-contaminants 1,1-DCE and PCE have been observed in groundwater samples collected from site monitoring wells for some time. As site-wide concentrations of TCE have generally decreased from the previous quarter, so too have the concentrations of PCE and 1,1-DCE. During the Third Quarter 2018, 1,1-DCE was detected above the laboratory reporting limit at only the sample collected from EW-01 (0.63 µg/L). The analytical results from the Third Quarter 2018 indicate that the highest concentrations of PCE are observed in the wells that have the highest concentrations of TCE. The PCE concentration in the sample collected from MW-10 was 9.2 µg/L (above the AWQS for PCE of 5 µg/L), and the original and duplicate samples from TSSV-03-PZ had PCE concentrations of 5.8 and 5.7 µg/L, respectively. No other samples collected from site monitoring wells contained concentrations of PCE, 1,1-DCE, or other constituent above the respective AWQS.

4.3 Soil Vapor

The analytical results from the Third Quarter 2018 indicate that TCE concentrations in soil vapor samples collected from the shallow zone were 40 milligrams per cubic meter (mg/m^3) or less (**Figure 3**). In the middle zone (**Figure 4**), TCE concentrations at TSSV-01-M (27 mg/m^3) declined, while TCE concentrations at TSSV-02-M and SVE-01-M (130 mg/m^3 and 48 mg/m^3, respectively) increased, for the third straight quarter. The highest TCE concentrations in the deep zone (**Figure 5**) were observed in TSSV-01-D, TSSV-07-D, and SVE-04, with concentrations of 310 mg/m^3, 490 mg/m^3, and 390 mg/m^3, respectively. TCE concentrations in soil vapor in the above water table zone were highest in the original and duplicate samples collected from MW-09, at 760 mg/m^3 and 980 mg/m^3, respectively (**Figure 6**); these were also the highest observed concentrations of TCE in soil vapor at the site during this quarter. The second highest concentrations of TCE in site soil vapor occurred in the deep zone around TSSV-01-D, TSSV-07-D, and SVE-04.

In general, the TCE concentrations in all soil vapor depth profiles display considerable variability between sampling events. Compared to the previous quarter, TCE concentrations in soil vapor increased in the shallow, and middle depth intervals and decreased in the deep and above water table intervals. The increases observed in the shallow and middle zones were an order of magnitude or less (e.g., TSSV-01-S increased from 20 mg/m^3 in the Second Quarter to 40 mg/m^3 in the Third Quarter), and when considering concentrations observed in earlier quarters, the general trend is declining TCE concentrations in the shallow and middle zones. In the deep zone, TCE concentrations continue to decrease compared to previous quarters, and decreases are likely attributable to the SVE system successfully remediating the target treatment area. TCE concentrations in soil vapor in the above water table zone in the vicinity of MW-09 and TSSV-05-PZ decreased compared to the previous two quarters.

1,1-DCE is frequently observed in soil vapor samples collected from wells in and near the Old Landfill (**Figure 7**). During the Third Quarter of 2018, the highest concentrations of 1,1-DCE in the soil vapor occurred in the deep zone at SVE-04 and TSSV-07-D (230 mg/m^3 and 70 mg/m^3, respectively). The concentrations of 1,1-DCE observed at the other wells that were sampled were below 10 mg/m^3 and in many cases were below the laboratory reporting limit. This is consistent with observations from samples from previous quarters.

4.4 SVE System Performance

Based on the results of SVE system performance sampling, the CAS captured or destroyed over 99.0% of extracted VOCs, as defined by Maricopa County Air Quality Department Rule 100 Section 200.113, and 81.6% of Federal Hazardous Air Pollutants (HAPs) during the reporting period. It is notable that there has been a recent increase in HAPs emissions. This is attributed to increasing influent methylene chloride concentrations associated with extraction from SVE-04. Maricopa County is monitoring these increases closely and will re-evaluate the SVE system operating strategy if necessary to control the emissions and comply with the terms of the air quality permit.

The calculated total mass removed on a monthly basis from the vadose zone in 2018 is presented in **Table 8**. Mass removal rates are based on actual hours of operation (hour meter readings) and the estimated hourly VOC extraction rate derived from performance testing. During the reporting period, the SVE system removed 3,876 pounds (lbs) of VOCs over a time period of 91 days, which is equivalent to a daily mass extraction rate of approximately 43 lbs per day. Since operations began on September 15, 2015, the calculated total mass of VOCs removed through September 19, 2018 is 33,871 lbs. The cumulative mass of VOCs removed since SVE system start up is presented in **Figure 9**. Also shown in **Figure 9** is the estimated

mass removed per month, normalized by dividing by the calculated mass by the instantaneous system flow rate observed during performance testing that month. In general, the normalized mass removed per month is steadily decreasing as the SVE system removes more mass from the subsurface.

The SVE system operated for 79% of the time in the Third Quarter 2018. The system was commonly turned off for the weekend if on Friday the field readings to estimate VOC removal efficiency of the CAS indicated that the removal efficiency on Saturday or Sunday would fall below the minimum VOC removal efficiency of 90% mandated by the air quality permit. The system was also turned off for several hours approximately every week to change the GAC order. Monthly testing of the CAS indicates that the system is operating as intended and is compliant with the air quality permit issued by Maricopa County.

5.0 FUTURE ACTIVITIES

Maricopa County will continue to conduct quarterly monitoring as described in Section 3.0 of this report. In addition to the reporting activities targeted for completion during the Fourth Quarter of 2018 listed in Section 2.0, upcoming activities scheduled through the First Quarter of 2019 include:

- Continued operation of the SVE system for source control.
- Maricopa County will continue to advance the design, permitting, and construction of the GWTS with the following activities:
  - Finalize contracting procurement with the selected contractor for Phase 1 construction;
  - Begin Phase 1 construction;
  - Submit the plans for Phase 2 to COP for construction permitting;
  - Select a contractor for Phase 2 and begin construction of the pipeline; and
  - Submit Phase 3 design plans to the COP for a planning review and construction permitting.
- Maricopa County will complete the wells installed during the Summer 2018 Drilling Program and begin sampling these wells as part of the quarterly and semi-annual groundwater sampling program.
- Maricopa County will continue the following activities with regards to development of the IW-01 well site, located on COP property on Sleepy Ranch Road:
  - Distribute an updated informational flyer to notify the Sleepy Ranch Road neighbors that drilling of IW-01 has been postponed until January 2019;
  - Begin construction of the perimeter wall and site grading (pending approval and permitting of Phase 3 design plans); and
  - Begin drilling IW-01 in late January 2019.

6.0 REFERENCES

Amec Foster Wheeler Environment & Infrastructure, Inc. (Amec Foster Wheeler), 2016. *Draft Final Revised Remedial Action Plan*. Prepared on behalf of the Maricopa County Risk Management and Maricopa County Waste Resources & Recycling Management. May 6, 2016.

Arizona Department of Environmental Quality (ADEQ), 2010. *Consent Order in the matter of Cave Creek Landfill located at 8.3 miles east of I-17 approximately ½ mile south of Carefree Highway Phoenix, Maricopa, Arizona, Azurite Place ID 1169*. Docket No. S-2-10. Filed on January 19, 2010.

ADEQ, 2016a. *Letter to Ms. Rita Neill of Maricopa County from Ms. Laura Malone of ADEQ regarding Approval of the Revised Remedial Action Plan (RAP) dated 5-6-2016*; *Maricopa County, Cave Creek Landfill; Azurite Place ID Number 1169*. PRU16-513. Dated November 23, 2016.

ADEQ, 2016b. *Amendment No. 1 to Consent Order in the matter of Cave Creek Landfill located at 8.3 miles east of I-17 approximately ½ mile south of Carefree Highway Phoenix, Maricopa, Arizona, Azurite Place ID 1169*. Docket No. S-2-10. Signed on September 27, 2016.

Email communication with ADEQ, 2017. *Plan to Further Evaluate Naphthalene at Cave Creek Landfill.* From Natalie Chrisman Lazarr, PE, Project Manager with Wood, to Richard Olm, PE, Senior Environmental Engineer with ADEQ. Dated June 30, 2017.

Hydro Geo Chem, Inc. (Hydro Geo Chem), 2014. *Post-Closure Care Plan for Maricopa County Solid Waste Landfills.* Prepared for Maricopa County Waste Resources and Recycling. June 19, 2014.

Maricopa County Air Quality Department, 2016a. *Air Quality Permit to Operate and/or Construct Issued to Cave Creek Landfill. Permit Number 980398*. Revision Date: June 16, 2016. Expiration Date: November 30, 2021.

TABLES

Table 1. Well Construction Summary

Cave Creek Landfill, Maricopa County

WellName	Location Type	ADWR ID	Northing (NAD83SP Int'l Ft)	Easting (NAD83SP Int'l Ft)	TOC (ft amsl)	Ground Surface (ft amsl)	Total Well Depth (ft)	Date Installed	Casing Diameter (I.D.)	CasingType	Top Screen Depth (ft bgs)	Bottom Screen Depth (ft bgs)	Top Screen Elevation (ft amsl)	Pump Intake Depth (ft bgs)	Pump Intake Elevation (ft amsl)	Comment
EW-01	Groundwater	55-226136	1012934.6	675653.9	1,854.5	1,852.9	830	8/20/2016	12	HSLA	729.1	809.4	1,123.8	-	-	-
MW-01	Groundwater	55-538298	1013459.3	675955.8	1,895.6	1,895.6	820	5/1/1993	6 inch	LCS	660	820	1,235.6	-	-	Originally installed at 695 ft bgs; moved to 740 ft bgs (at bottom of pump) on 3/2/2005.
MW-02	Groundwater	55-538299	1012899.4	675673.9	1,856.0	1,855.0	805	5/1/1993	6 inch	LCS	630	805	1,225.0	-	-	Originally installed at 675 ft bgs; moved to 704 ft bgs (at bottom of pump) on 3/1/2005; moved to 714 ft bgs on 6/26/2009. Pump removed 8/2017
MW-03	Groundwater	55-216293	1013323.0	676495.2	1,866.4	1,867.0	830	12/13/2007	6 inch	LCS	679	799	1,188.0	-	-	Originally installed at 777 ft bgs; moved to 724 ft bgs on 6/25/2009. Pump removed 8/2017
MW-04	Groundwater	55-912575	1012613.0	675427.0	1,849.8	1,848.7	768	10/26/2010	6 inch	LCS	667.5	752.7	1,181.2	-	-	Pump removed 8/2017
MW-05	Groundwater	55-912728	1012467.6	674571.8	1,845.1	1,843.2	767	12/15/2010	6 inch	LCS	660	740.2	1,183.2	-	-	Pump removed 8/2017
MW-06	Groundwater	55-913112	1012139.1	675961.1	1,860.7	1,858.6	776.9	5/16/2011	6 inch	LCS	683	763	1,175.6	-	-	Pump removed 8/2017
MW-07	Groundwater	55-914001	1012607.3	675919.7	1,859.6	1,857.8	765	2/8/2012	8.25 inch	LCS	674.8	754.8	1,183.0	-	-	Pump removed 8/2017
MW-08	Groundwater	55-913859	1015700.0	676938.9	1,889.1	1,887.5	766.5	1/9/2012	8.25 inch	LCS	691.5	761.5	1,196.0	-	-	Pump removed 8/2017
MW-09	Groundwater	55-920632	1015090.4	675043.7	1,864.8	1,864.2	775	7/25/2017	6 inch	Sch 80 PVC	685	775	1,179.2	-	-	-
MW-09-S	Soil Vapor	55-920632	1015090.4	675043.7	1,864.8	1,864.2	160	7/25/2017	1 inch	Sch 80 PVC	140	160	1,724.2	-	-	-
MW-09-M	Soil Vapor	55-920632	1015090.4	675043.7	1,864.8	1,864.2	360	7/25/2017	1 inch	Sch 80 PVC	340	360	1,524.2	-	-	-
MW-09-D	Soil Vapor	55-920632	1015090.4	675043.7	1,864.8	1,864.2	585	7/25/2017	1 inch	Sch 80 PVC	535	585	1,329.2	-	-	-
MW-10	Groundwater	55-920633	1013594.3	674997.4	1,848.3	1,847.4	765	9/3/2017	6 inch	Sch 80 PVC	670	760	1,177.4	-	-	-
MW-10-S	Soil Vapor	55-920633	1013594.3	674997.4	1,848.3	1,847.4	140	9/6/2017	1 inch	Sch 80 PVC	120	140	1,727.4	-	-	-
MW-10-M	Soil Vapor	55-920633	1013594.3	674997.4	1,848.3	1,847.4	340	9/6/2017	1 inch	Sch 80 PVC	320	340	1,527.4	-	-	-
MW-10-D	Soil Vapor	55-920633	1013594.3	674997.4	1,848.3	1,847.4	570	9/6/2017	1 inch	Sch 80 PVC	520	570	1,327.4	-	-	-
PW	Groundwater	55-503913	1015806.0	675722.2	1,882.0	1,881.4	820	10/1/1982	6 inch	LCS	680	810	1,201.4	-	-	Originally installed at 750 ft bgs; moved to 729 ft bgs on 6/25/2009. Pump removed 8/2017
SVE-01	Soil Vapor Extraction	55-917896	1015834.8	675971.9	-	1,882.1	610	5/18/2015	6 inch	Sch 80 PVC	120	600	1,762.1	-	-	-

Table 1. Well Construction Summary

WellName	Location Type	ADWR ID	Northing (NAD83SP Int'l Ft)	Easting (NAD83SP Int'l Ft)	TOC (ft amsl)	Ground Surface (ft amsl)	Total Well Depth (ft)	Date Installed	Casing Diameter (I.D.)	CasingType	Top Screen Depth (ft bgs)	Bottom Screen Depth (ft bgs)	Top Screen Elevation (ft amsl)	Pump Intake Depth (ft bgs)	Pump Intake Elevation (ft amsl)	Comment
SVE-01-S	Soil Vapor	55-917896	1015834.8	675971.9	1,882.1	1,882.1	610	5/18/2015	1 inch	Sch 80 PVC	180	200	1,702.1	-	-	-
SVE-01-M	Soil Vapor	55-917896	1015834.8	675971.9	1,882.1	1,882.1	610	5/18/2015	1 inch	Sch 80 PVC	360	380	1,522.1	-	-	-
SVE-01-D	Soil Vapor	55-917896	1015834.8	675971.9	1,882.1	1,882.1	610	5/18/2015	1 inch	Sch 80 PVC	480	500	1,402.1	-	-	-
SVE-02	Soil Vapor Extraction	55-917897	1015472.6	675617.9	1,900.4	1,900.4	630	5/5/2015	6 inch	Sch 80 PVC	400	620	1,500.4	-	-	-
SVE-02-S	Soil Vapor	55-917897	1015472.6	675617.9	1,900.4	1,900.4	630	5/5/2015	1 inch	Sch 80 PVC	150	170	1,750.4	-	-	-
SVE-02-M	Soil Vapor	55-917897	1015472.6	675617.9	1,900.4	1,900.4	630	5/5/2015	1 inch	Sch 80 PVC	300	350	1,600.4	-	-	-
SVE-03	Soil Vapor	55-920634	1015112.6	675423.8	1,907.5	1,905.1	655	8/8/2017	6 inch	Sch 80 PVC	530	650	1,375.1	-	-	-
SVE-03-S	Soil Vapor	55-920634	1015112.6	675423.8	1,907.5	1,905.1	200	8/8/2017	1 inch	Sch 80 PVC	180	200	1,725.1	-	-	-
SVE-03-M	Soil Vapor	55-920634	1015112.6	675423.8	1,907.5	1,905.1	400	8/8/2017	1 inch	Sch 80 PVC	380	400	1,525.1	-	-	-
SVE-04	Soil Vapor	55-920878	1015934.6	676182.8	1,893.0	1,890.8	644	10/4/2017	6 inch	Sch 80 PVC	514	639	1,376.8	-	-	-
SVE-04-S	Soil Vapor	55-920878	1015934.6	676182.8	1,893.0	1,890.8	185	10/4/2017	1 inch	Sch 80 PVC	165	185	1,725.8	-	-	-
SVE-04-M	Soil Vapor	55-920878	1015934.6	676182.8	1,893.0	1,890.8	385	10/4/2017	1 inch	Sch 80 PVC	365	385	1,525.8	-	-	-
TSSV-01-S	Soil Vapor	55-911519	1015918.8	675991.0	1,881.0	1,881.0	610	1/22/2010	2 inch	Sch 80 PVC	150	200	1,731.0	-	-	-
TSSV-01-M	Soil Vapor	55-911519	1015918.8	675991.0	1,881.0	1,881.0	610	1/22/2010	2 inch	Sch 80 PVC	350	400	1,531.0	-	-	-
TSSV-01-D	Soil Vapor	55-911519	1015918.8	675991.0	1,881.0	1,881.0	610	1/22/2010	2 inch	Sch 80 PVC	549	599	1,332.0	-	-	-
TSSV-02-S	Soil Vapor	55-915432	1015688.3	675875.9	1,880.2	1,881.4	210	5/3/2013	2 inch	Sch 80 PVC	150.3	200.3	1,731.1	-	-	-
TSSV-02-M	Soil Vapor	55-915432	1015688.3	675875.9	1,880.2	1,881.4	410	5/3/2013	2 inch	Sch 80 PVC	350.3	400.3	1,531.1	-	-	-
TSSV-02-D	Soil Vapor	55-915279	1015688.8	675860.8	1,880.2	1,881.2	609	4/24/2013	2 inch	Sch 80 PVC	549.3	599.3	1,331.9	-	-	-
TSSV-02-PZ	Groundwater	55-915279	1015688.8	675860.8	1,880.2	1,881.2	779	4/24/2013	2 inch	Sch 80 PVC	699.3	769.3	1,181.9	-	-	-
TSSV-03-S	Soil Vapor	55-915281	1014061.5	675688.5	1,902.7	1,901.8	230	4/26/2013	2 inch	Sch 80 PVC	170.5	220.5	1,731.3	-	-	-
TSSV-03-M	Soil Vapor	55-915281	1014061.5	675688.5	1,902.7	1,901.8	430	4/26/2013	2 inch	Sch 80 PVC	370.5	420.5	1,531.3	-	-	-
TSSV-03-D	Soil Vapor	55-915281	1014061.5	675688.5	1,902.7	1,901.8	629	4/26/2013	2 inch	Sch 80 PVC	569.5	619.5	1,332.3	-	-	-
TSSV-03-PZ	Groundwater	55-915281	1014061.5	675688.5	1,902.7	1,901.8	799	4/26/2013	2 inch	Sch 80 PVC	719.5	789.5	1,182.3	-	-	-

Table 1. Well Construction Summary

WellName	Location Type	ADWR ID	Northing (NAD83SP Int'l Ft)	Easting (NAD83SP Int'l Ft)	TOC (ft amsl)	Ground Surface (ft amsl)	Total Well Depth (ft)	Date Installed	Casing Diameter (I.D.)	CasingType	Top Screen Depth (ft bgs)	Bottom Screen Depth (ft bgs)	Top Screen Elevation (ft amsl)	Pump Intake Depth (ft bgs)	Pump Intake Elevation (ft amsl)	Comment
TSSV-03-P	Soil Vapor	55-915281	1014061.5	675688.5	1,902.7	1,901.8	73	4/26/2013	1 inch	Sch 80 PVC	60	70	1,841.8	-	-	-
TSSV-04-S	Soil Vapor	55-915282	1015319.7	675423.9	1,906.0	1,905.4	235	5/31/2013	2 inch	Sch 80 PVC	174.5	224.5	1,730.9	-	-	-
TSSV-04-M	Soil Vapor	55-915282	1015319.7	675423.9	1,906.0	1,905.4	435	5/31/2013	2 inch	Sch 80 PVC	374.5	424.5	1,530.9	-	-	-
TSSV-04-D	Soil Vapor	55-915629	1015319.7	675423.9	1,906.0	1,905.0	635	6/10/2013	2 inch	Sch 80 PVC	575	625	1,330.0	-	-	-
TSSV-04-PZ	Groundwater	55-915282	1015319.7	675423.9	1,906.0	1,905.8	804	5/31/2013	3 inch	Sch 80 PVC	723.5	793.5	1,182.3	-	-	-
TSSV-05-S	Soil Vapor	55-917870	1014659.1	675396.6	1,905.7	1,904.7	430	3/8/2015	2 inch	Sch 80 PVC	170	220	1,734.7	-	-	-
TSSV-05-M	Soil Vapor	55-917870	1014659.1	675396.6	1,905.7	1,904.7	430	3/8/2015	2 inch	Sch 80 PVC	370	420	1,534.7	-	-	-
TSSV-05-D	Soil Vapor	55-917892	1014659.1	675396.6	1,905.7	1,905.1	805	4/21/2015	2 inch	Sch 80 PVC	570	620	1,335.1	-	-	-
TSSV-05-PZ	Groundwater	55-917892	1014659.1	675396.6	1,905.7	1,905.1	805	4/21/2015	4 inch	Sch 80 PVC	720	790	1,185.1	-	-	-
TSSV-06-S	Soil Vapor	55-917894	1015997.6	675654.5	1,876.9	1,876.5	610	3/18/2015	2 inch	Sch 80 PVC	150	200	1,726.5	-	-	-
TSSV-06-M	Soil Vapor	55-917894	1015997.6	675654.5	1,876.9	1,876.5	610	3/18/2015	2 inch	Sch 80 PVC	350	400	1,526.5	-	-	-
TSSV-06-D	Soil Vapor	55-917894	1015997.6	675654.5	1,876.9	1,876.5	610	3/18/2015	2 inch	Sch 80 PVC	550	600	1,326.5	-	-	-
TSSV-06-PZ	Groundwater	55-917895	1015997.6	675654.5	1,876.9	1,876.1	794	4/8/2015	4 inch	Sch 80 PVC	700	785	1,176.1	-	-	-
TSSV-07-S	Soil Vapor	55-917947	1015855.0	676202.1	1,889.9	1,889.5	620	3/30/2015	2 inch	Sch 80 PVC	160	210	1,729.5	-	-	-
TSSV-07-M	Soil Vapor	55-917947	1015855.0	676202.1	1,889.9	1,889.5	620	3/30/2015	2 inch	Sch 80 PVC	360	410	1,529.5	-	-	-
TSSV-07-D	Soil Vapor	55-917947	1015855.0	676202.1	1,889.9	1,889.5	620	3/30/2015	2 inch	Sch 80 PVC	560	610	1,329.5	-	-	-
TSSV-07-PZ	Groundwater	55-917946	1015855.0	676202.1	1,889.9	1,889.0	795	4/13/2015	4 inch	Sch 80 PVC	710	780	1,179.0	-	-	-

Notes: LFG - Landfill Gas
ft - Feet
ft bgs - Feet below ground surface
ft amsl - Feet above mean sea level
I.D. - Inner Diameter
Pumps removed for wells MW-02 - MW-08 and PW 8/2017.

Table 2. Groundwater Elevation, Gradient, and Flow Direction

Cave Creek Landfill, Maricopa County

Groundwater Elevation by Well (ft amsl)

Sample Date	Fourth Quarter 2017 (Nov. 15 to Nov. 16, 2017)	First Quarter 2018 (Feb. 13 to Feb. 16, 2018)	Second Quarter 2018 (May 7 to May 10, 2018)	Third Quarter 2018 (Aug. 13 to Aug. 15, 2018)
EW-01	1156.80	1156.53	1156.65	1156.66
PW	1163.08	1162.96	1162.96	1162.91
MW-02	1156.90	1156.62	1156.78	1156.80
MW-03	1157.66	1157.50	1157.50	1157.66
MW-04	1156.53	1156.23	1156.30	1156.31
MW-05	1156.09	1155.78	1155.98	1156.04
MW-06	1155.22	1154.98	1155.21	1155.15
MW-07	1156.43	1156.18	1156.31	1156.29
MW-08	1162.58	1162.59	1162.58	1162.60
MW-09	1161.66	1161.44	1161.62	1161.45
MW-10	1158.62	1158.34	1158.47	1158.46
TSSV-02-PZ	1162.90	1162.69	1162.69	1162.66
TSSV-03-PZ	1159.16	1158.04	1158.04	1158.04
TSSV-04-PZ*	1160.92	1160.84	1160.86	1160.65
TSSV-05-PZ	1160.62	1160.51	1160.54	1160.37
TSSV-06-PZ	1162.81	1162.52	1162.73	1162.64
TSSV-07-PZ	1162.55	1162.49	1162.62	1162.35
Gradient (ft/ft)	0.002	0.002	0.002	0.002
Flow Direction (deg. from N)	175.3	177.8	176.2	177.5

Notes:
Flow direction measured in a clockwise rotation; North is 0 degrees, East is 90 degrees, South is 180 degrees, and West is 270 degrees.
deg. = degrees
ft amsl = Feet above mean sea level
PW = Production Well
MW = Monitoring Well
NM = Not Measured
TSSV = Monitoring Well
PZ = Piezometer
* = Inconsistent measurement (not used in gradient or flow direction calculations)

Table 3. Groundwater Analytical Results - Summary of VOC Data

Cave Creek Landfill, Maricopa County

Well Name	Sample Date	Sample Elevation (ft amsl)	Units	Sample Method	1,1-Dichloroethane	1,1-Dichloroethene	Benzene	Bromoform	Carbon disulfide	Chlorobenzene	Chloroform	cis-1,2-Dichloroethene	Naphthalene	Tetrachloroethene	Toluene	trans-1,2-dichloroethene	Trichloroethene	Vinyl Chloride	Comments
EW-01																			
	8/15/2018	1,114.5	µg/L	PDB	0.27	0.63	<5	<5	<5	<5	<5	<5	<10	0.67	<5	<5	19	<2	--
MW-02																			
	8/15/2018	1,142.0	µg/L	PDB	3.6	<0.5	0.53	<1	<0.5	<0.5	1.7	6.4	<5	4.9	<2	<0.5	83	<0.5	--
	8/15/2018	1,142.0	µg/L	PDB	-	-	-	-	-	-	-	-	0.052	-	-	-	-	-	--
MW-03																			
	8/13/2018	1,152.4	µg/L	PDB	-	-	-	-	-	-	-	-	0.049	-	-	-	-	-	--
	8/13/2018	1,142.4	µg/L	PDB	<0.5	<0.5	<0.5	<1	<0.5	<0.5	<0.5	<0.5	<5	<0.5	<2	<0.5	2.2	<0.5	--
MW-04																			
	8/13/2018	1,141.8	µg/L	PDB	<0.5	<0.5	<0.5	<1	<0.5	<0.5	<0.5	<0.5	<5	<0.5	<2	<0.5	0.44	<0.5	--
	8/13/2018	1,141.8	µg/L	PDB	-	-	-	-	-	-	-	-	0.050	-	-	-	-	-	--
MW-05																			
	8/14/2018	1,141.1	µg/L	PDB	<0.5	<0.5	<0.5	<1	<0.5	<0.5	<0.5	<0.5	<5	0.40	<2	<0.5	42	<0.5	--
	8/14/2018	1,141.1	µg/L	PDB	-	-	-	-	-	-	-	-	0.034	-	-	-	-	-	--
MW-06																			
	8/13/2018	1,140.7	µg/L	PDB	<0.5	<0.5	<0.5	<1	<0.5	<0.5	<0.5	<0.5	<5	<0.5	<2	<0.5	1.1	<0.5	--
	8/13/2018	1,140.7	µg/L	PDB	-	-	-	-	-	-	-	-	0.035	-	-	-	-	-	--
MW-07																			
	8/13/2018	1,141.6	µg/L	PDB	-	-	-	-	-	-	-	-	0.026	-	-	-	-	-	--
	8/13/2018	1,141.6	µg/L	PDB	<0.5	<0.5	<0.5	<1	<0.5	<0.5	<0.5	2.5	<5	0.71	<2	<0.5	36	<0.5	--
MW-08																			
	8/14/2018	1,147.1	µg/L	PDB	1.7	<0.5	0.69	<1	<0.5	<0.5	<0.5	2.6	<5	1.5	<2	<0.5	130	<0.5	--
	8/14/2018	1,147.1	µg/L	PDB	-	-	-	-	-	-	-	-	0.033	-	-	-	-	-	--
	8/14/2018	1,147.1	µg/L	PDB	1.6	<0.5	0.67	<1	<0.5	<0.5	1.6	2.6	0.039	1.7	<2	<0.5	130	<0.5	Duplicate
MW-09																			
	8/14/2018	1,146.8	µg/L	PDB	<0.5	<0.5	<0.5	<1	<0.5	<0.5	1.6	2.8	<5	0.65	<2	<0.5	18	<0.5	--
MW-10																			
	8/14/2018	1,144.3	µg/L	PDB	1.8	<0.5	<0.5	<1	<0.5	<0.5	3.2	27	<5	9.2	<2	<0.5	350	0.65	--
PW																			
	8/15/2018	1,148.0	µg/L	PDB	<5	<5	<5	<5	<5	<5	<5	0.79	0.034	<5	<5	<5	10	<2	--
TSSV-02-PZ																			
	8/15/2018	1,147.2	µg/L	PDB	<5	<5	<5	<5	<5	<5	<5	<5	<10	<5	<5	<5	<5	<2	--
AWQS:					**N/A**	**7**	**5**	**80**	**N/A**	**100**	**80**	**70**	**N/A**	**5**	**1,000**	**100**	**5**	**2**	

Table 3. Groundwater Analytical Results - Summary of VOC Data

Well Name	Sample Date	Sample Elevation (ft amsl)	Units	Sample Method	1,1-Dichloroethane	1,1-Dichloroethene	Benzene	Bromoform	Carbon disulfide	Chlorobenzene	Chloroform	cis-1,2-Dichloroethene	Naphthalene	Tetrachloroethene	Toluene	trans-1,2-dichloroethene	Trichloroethene	Vinyl Chloride	Comments
TSSV-03-PZ																			
	8/15/2018	1,142.7	µg/L	PDB	<5	<5	<5	<5	<5	<5	0.49	11	<10	5.8	<5	<5	260	<2	Duplicate
	8/15/2018	1,142.7	µg/L	PDB	<5	<5	<5	<5	<5	<5	0.58	12	<10	5.7	<5	<5	300	<2	- -
TSSV-04-PZ																			
	8/15/2018	1,146.0	µg/L	PDB	<5	<5	<5	<5	<5	<5	0.35	<5	<10	<5	<5	<5	62	<2	- -
TSSV-05-PZ																			
	8/15/2018	1,145.7	µg/L	PDB	<5	<5	<5	<5	<5	<5	<5	0.78	<10	<5	<5	<5	<5	<2	- -
TSSV-06-PZ																			
	8/14/2018	1,147.9	µg/L	PDB	<0.5	<0.5	<0.5	<1	<0.5	<0.5	<0.5	<0.5	<5	1.6	<2	<0.5	7.0	<0.5	- -
TSSV-07-PZ																			
	8/14/2018	1,147.9	µg/L	PDB	<0.5	<0.5	<0.5	<1	<0.5	<0.5	<0.5	<0.5	<5	<0.5	<2	<0.5	0.79	<0.5	- -
AWQS:					**N/A**	**7**	**5**	**80**	**N/A**	**100**	**80**	**70**	**N/A**	**5**	**1,000**	**100**	**5**	**2**	

Notes: AWQS - Aquifer Water Quality Standard
Grey text indicates result was less than the reporting limit
Red text indicates a result detected above the AWQS
µg/L - micrograms per liter
ft amsl - feet above mean sea level
btw - below water table
PDB - Passive Diffusion Bag
VOC - Volatile Organic Compound
Analytical method is VOCs by SW 8260B unless otherwise noted.
- = data not applicable or not available
* = approximate sample location

Table 4. Groundwater Analytical Results - Summary of General Chemistry

Cave Creek Landfill, Maricopa County

Well Name	Sample Date	Sample Elevation (ft amsl)	Units	Alkalinity, (as CaCO3)	Chloride	Fluoride	Nitrate (As N)	Sulfate	Comments
MW-02									
	8/15/2018	1,142.0	mg/L	350	19	<0.5	0.30	2.6	--
MW-03									
	8/13/2018	1,142.4	mg/L	160	19	<0.5	0.040	0.74	--
MW-04									
	8/13/2018	1,141.8	mg/L	230	22	<0.5	0.12	9.0	--
MW-05									
	8/14/2018	1,141.1	mg/L	230	19	<0.5	0.069	8.9	--
MW-06									
	8/13/2018	1,140.7	mg/L	240	17	<0.5	0.092	20	--
MW-07									
	8/13/2018	1,141.6	mg/L	160	21	<0.5	0.085	1.9	--
MW-08									
	8/14/2018	1,147.1	mg/L	130	21	0.039	0.20	0.59	--
	8/14/2018	1,147.1	mg/L	130	21	0.042	0.15	0.77	Duplicate
PW									
	8/15/2018	1,148.0	mg/L	230	21	<0.5	1.3	18	--
AWQS:				**N/A**	**N/A**	**4**	**10**	**N/A**	

Notes: AWQS - Aquifer Water Quality Standard
Grey text indicates result was less than the reporting limit
Bold text indicates a result detected above the AWQS
mg/L - milligrams per liter
ft amsl - feet above mean sea level
- = data not applicable or not available

Table 5. Groundwater Analytical Results - Summary of Metals Data

Cave Creek Landfill, Maricopa County

Well Name	Sample Date	Sample Elevation (ft amsl)	Units	Antimony	Arsenic	Barium	Beryllium	Cadmium	Chromium	Cobalt	Copper	Lead	Nickel	Selenium	Silver	Thallium	Vanadium	Zinc	Comments
MW-02																			
	8/15/2018	1,142.0	mg/L	<0.02	<0.02	0.027	<0.004	<0.01	<0.01	<0.01	<0.02	<0.015	<0.01	<0.03	<0.03	<0.02	<0.09	0.20	--
MW-03																			
	8/13/2018	1,142.4	mg/L	0.0059	<0.02	0.015	<0.004	<0.01	<0.01	<0.01	<0.02	<0.015	<0.01	<0.03	<0.03	<0.02	<0.09	0.32	--
MW-04																			
	8/13/2018	1,141.8	mg/L	<0.02	<0.02	0.0097	<0.004	<0.01	<0.01	<0.01	<0.02	<0.015	<0.01	0.0074	<0.03	<0.02	0.011	0.30	--
MW-05																			
	8/14/2018	1,141.1	mg/L	<0.02	<0.02	0.013	<0.004	<0.01	<0.01	<0.01	0.0065	<0.015	<0.01	<0.03	<0.03	<0.02	0.0060	0.43	--
MW-06																			
	8/13/2018	1,140.7	mg/L	<0.02	<0.02	0.0069	<0.004	<0.01	<0.01	<0.01	<0.02	<0.015	<0.01	<0.03	<0.03	<0.02	<0.09	0.31	--
MW-07																			
	8/13/2018	1,141.6	mg/L	<0.02	<0.02	0.011	<0.004	<0.01	<0.01	<0.01	<0.02	<0.015	<0.01	<0.03	<0.03	<0.02	<0.09	0.30	--
MW-08																			
	8/14/2018	1,147.1	mg/L	<0.02	<0.02	0.013	<0.004	<0.01	<0.01	<0.01	<0.02	<0.015	<0.01	<0.03	<0.03	<0.02	<0.09	0.28	--
	8/14/2018	1,147.1	mg/L	<0.02	<0.02	0.011	<0.004	<0.01	<0.01	<0.01	<0.02	<0.015	<0.01	<0.03	<0.03	<0.02	<0.09	0.17	Duplicate
PW																			
	8/15/2018	1,148.0	mg/L	<0.02	0.014	0.0041	<0.004	<0.01	<0.01	<0.01	<0.02	<0.015	<0.01	<0.03	<0.03	<0.02	0.016	0.052	--
AWQS:				**0.006**	**0.01**	**2.0**	**0.004**	**0.005**	**0.1**	**NA**	**NA**	**0.05**	**0.1**	**0.05**	**NA**	**0.002**	**NA**	**NA**	
Upper Background Threshold Value:				*****	**0.1**	**0.25**	*****	*****	**0.025**	**0.025**	**0.025**	**0.1**	**0.25**	**0.05**	*****	*****	**0.045**	**0.7948**	

Notes: AWQS - Aquifer Water Quality Standard
Grey text indicates result was less than the reporting limit
Red text indicates a result detected above the AWQS
mg/L - milligrams per liter
ft amsl - feet above mean sea level
NA = data not applicable or not available
* = Two consecutive detect values in downgradient wells

Tuesday, November 27, 2018

Table 6. Soil Vapor Analytical Results - Wellhead TO-15 Analysis Data

Cave Creek Landfill, Maricopa County

Well Name	Sample Date	Sample Elevation (ft amsl)	Units	Acetone	2-Butanone (MEK)	Chlorobenzene	Chloroform	1,1-Dichloroethane	1,2-Dichloroethane	1,1-Dichloroethene	cis-1,2-Dichloroethene	trans-1,2-Dichloroethene	Freon 11	Freon 12	Freon 113	Methylene chloride	Tetrachloroethene	Tetrahydrofuran	Trichloroethene	Vinyl Chloride	Comments
MW-09																					
	9/6/2018	1,179.2	µg/m³	<59,500	<73,800	<11,500	<12,200	<10,100	<10,100	<9,930	<9,900	<9,900	<14,100	<24,800	58,600	<34,700	<33,900	<29,500	983,000	<6,400	Duplicate
	9/6/2018	1,179.2	µg/m³	<59,500	<73,800	<11,500	<12,200	<10,100	<10,100	<9,930	<9,900	<9,900	<14,100	<24,800	55,500	<34,700	<33,900	<29,500	757,000	<6,400	--
MW-09-S																					
	9/6/2018	1,724.2	µg/m³	<2,380	<2,950	<460	<488	<405	<405	<397	<396	<396	<562	<990	<766	<1,390	1,740	<1,180	16,200	<256	--
MW-09-M																					
	9/6/2018	1,524.2	µg/m³	<1,190	<1,480	<230	<244	<203	<203	<199	<198	<198	1,210	1,340	5,340	<694	2,260	<590	5,480	<128	--
MW-09-D																					
	9/6/2018	1,329.2	µg/m³	<1,190	<1,480	<230	<244	<203	<203	<199	<198	<198	<281	<495	6,110	<694	1,650	<590	8,540	<128	--
MW-10																					
	9/5/2018	1,177.4	µg/m³	<2,380	<2,950	<460	<488	3,270	<405	<397	<396	<396	6,860	10,700	1,590	<1,390	7,120	<1,180	22,300	<256	--
MW-10-S																					
	9/5/2018	1,727.4	µg/m³	<2,380	<2,950	<460	<488	<405	<405	<397	<396	<396	5,100	16,000	1,390	<1,390	3,130	<1,180	2,090	<256	--
MW-10-M																					
	9/5/2018	1,527.4	µg/m³	<2,380	<2,950	<460	<488	3,400	<405	1,320	539	<396	12,500	36,800	2,990	1,740	5,030	<1,180	1,460	<256	--
MW-10-D																					
	9/5/2018	1,327.4	µg/m³	<2,380	<2,950	<460	<488	11,600	<405	1,270	<396	<396	14,300	34,500	2,600	<1,390	9,970	<1,180	5,690	<256	--
PW																					
	9/12/2018	1,201.4	µg/m³	<1,190	<1,480	<230	<244	<203	<203	<199	372	<198	<281	<495	758	<694	1,240	<590	16,700	<128	--

Table 6. Soil Vapor Analytical Results - Wellhead TO-15 Analysis Data

Cave Creek Landfill, Maricopa County

Well Name	Sample Date	Sample Elevation (ft amsl)	Units	Acetone	2-Butanone (MEK)	Chlorobenzene	Chloroform	1,1-Dichloroethane	1,2-Dichloroethane	1,1-Dichloroethene	cis-1,2-Dichloroethene	trans-1,2-Dichloroethene	Freon 11	Freon 12	Freon 113	Methylene chloride	Tetrachloroethene	Tetrahydrofuran	Trichloroethene	Vinyl Chloride	Comments
SVE-01																					
	9/12/2018	1,762.1	µg/m³	<1,190	<1,480	8,460	366	<203	<203	413	1,070	<198	287	<495	1,190	<694	2,100	<590	16,500	<128	- -
SVE-01-S																					
	9/10/2018	1,702.1	µg/m³	<238	<295	90.2	102	<40.5	<40.5	<39.7	<39.6	<39.6	288	<99.0	239	<139	408	<118	3,170	<25.6	- -
SVE-01-M																					
	9/10/2018	1,522.1	µg/m³	<2,380	<2,950	30,600	664	<405	<405	1,110	3,270	<396	<562	<990	2,680	<1,390	4,680	<1,180	48,300	<256	- -
SVE-01-D																					
	9/10/2018	1,402.1	µg/m³	<595	<738	2,500	156	<101	<101	<99.3	287	<99.0	230	<248	394	<347	597	<295	8,220	<64.0	- -
SVE-02																					
	9/12/2018	1,500.4	µg/m³	<2,380	<2,950	478	781	<405	<405	810	1,710	<396	<562	<990	9,420	<1,390	6,160	<1,180	53,700	<256	- -
SVE-02-S																					
	9/10/2018	1,750.4	µg/m³	428	<295	425	70.3	<40.5	<40.5	<39.7	2,630	<39.6	232	573	88.9	<139	1,040	<118	1,810	809	- -
SVE-02-M																					
	9/10/2018	1,600.4	µg/m³	<238	<295	<46.0	152	<40.5	<40.5	<39.7	94.2	<39.6	218	527	265	<139	1,110	<118	1,340	69.6	- -
SVE-03																					
	9/12/2018	1,375.1	µg/m³	<23,800	<29,500	<4,600	<4,880	<4,050	<4,050	4,920	4,360	<3,960	<5,620	<9,900	27,700	<13,900	<13,600	<11,800	121,000	2,560	- -
SVE-03-S																					
	9/12/2018	1,725.1	µg/m³	<59.5	<73.8	<11.5	34.4	<10.1	<10.1	<9.93	44.0	<9.90	128	314	169	<34.7	1,260	<29.5	662	10.4	- -
SVE-03-M																					
	9/12/2018	1,525.1	µg/m³	<238	<295	<46.0	113	69.7	<40.5	<39.7	53.9	<39.6	1,590	1,670	789	1,170	1,200	<118	1,830	<25.6	- -

Table 6. Soil Vapor Analytical Results - Wellhead TO-15 Analysis Data

Cave Creek Landfill, Maricopa County

Well Name	Sample Date	Sample Elevation (ft amsl)	Units	Acetone	2-Butanone (MEK)	Chlorobenzene	Chloroform	1,1-Dichloroethane	1,2-Dichloroethane	1,1-Dichloroethene	cis-1,2-Dichloroethene	trans-1,2-Dichloroethene	Freon 11	Freon 12	Freon 113	Methylene chloride	Tetrachloroethene	Tetrahydrofuran	Trichloroethene	Vinyl Chloride	Comments
SVE-04																					
	9/12/2018	1,376.8	µg/m³	<59,500	<73,800	<11,500	<12,200	<10,100	<10,100	228,000	32,700	<9,900	<14,100	<24,800	141,000	243,000	85,400	<29,500	386,000	<6,400	- -
SVE-04-S																					
	9/12/2018	1,725.8	µg/m³	<119	<148	853	27.3	20.3	<20.3	<19.9	223	<19.8	472	219	102	<69.4	315	<59.0	937	<12.8	- -
SVE-04-M																					
	9/12/2018	1,525.8	µg/m³	<2,380	<2,950	17,300	<488	<405	<405	3,500	2,030	<396	<562	<990	<766	<1,390	4,080	<1,180	8,490	<256	- -
TSSV-01-S																					
	9/8/2018	1,731.0	µg/m³	<2,380	<2,950	<460	<488	<405	<405	<397	832	<396	<562	<990	1,390	<1,390	3,240	<1,180	39,600	<256	- -
TSSV-01-M																					
	9/8/2018	1,531.0	µg/m³	<5,950	<7,380	6,440	<1,220	<1,010	<1,010	<993	<990	<990	<1,410	<2,480	<1,920	<3,470	6,580	10,500	27,000	<640	- -
TSSV-01-D																					
	9/8/2018	1,332.0	µg/m³	<23,800	<29,500	5,340	<4,880	<4,050	<4,050	<3,970	12,000	<3,960	<5,620	<9,900	76,000	<13,900	16,000	<11,800	377,000	2,560	Duplicate
	9/8/2018	1,332.0	µg/m³	<23,800	<29,500	<4,600	<4,880	<4,050	<4,050	<3,970	13,500	<3,960	<5,620	<9,900	70,900	<13,900	<13,600	<11,800	310,000	2,560	- -
TSSV-02-S																					
	9/8/2018	1,731.2	µg/m³	<238	<295	394	<48.8	<40.5	<40.5	152	219	<39.6	<56.2	<99.0	109	<139	800	2,950	4,960	<25.6	- -
TSSV-02-M																					
	9/8/2018	1,531.2	µg/m³	<11,900	<14,800	<2,300	<2,440	<2,030	<2,030	1,990	<1,980	<1,980	<2,810	<4,950	6,510	<6,940	<6,780	6,810	133,000	<1,280	- -
TSSV-02-D																					
	9/8/2018	1,331.9	µg/m³	<2,380	<2,950	4,540	<488	<405	<405	<397	2,910	<396	<562	<990	797	<1,390	4,370	<1,180	53,600	<256	- -

Table 6. Soil Vapor Analytical Results - Wellhead TO-15 Analysis Data

Cave Creek Landfill, Maricopa County

Well Name	Sample Date	Sample Elevation (ft amsl)	Units	Acetone	2-Butanone (MEK)	Chlorobenzene	Chloroform	1,1-Dichloroethane	1,2-Dichloroethane	1,1-Dichloroethene	cis-1,2-Dichloroethene	trans-1,2-Dichloroethene	Freon 11	Freon 12	Freon 113	Methylene chloride	Tetrachloroethene	Tetrahydrofuran	Trichloroethene	Vinyl Chloride	Comments
TSSV-02-PZ																					
	9/8/2018	1,181.9	µg/m³	<238	<295	<46.0	<48.8	42.9	<40.5	108	2,660	<39.6	<56.2	<99.0	<76.6	<139	273	<118	4,520	<25.6	- -
TSSV-03-D																					
	9/6/2018	1,332.3	µg/m³	<23.8	<29.5	5.06	<4.88	40.3	<4.05	<3.97	<3.96	<3.96	48.4	160	16.5	<13.9	198	<11.8	100	<2.56	- -
TSSV-03-PZ																					
	9/6/2018	1,182.3	µg/m³	<238	<295	<46.0	<48.8	46.2	<40.5	<39.7	61.8	<39.6	209	497	<76.6	<139	235	<118	990	<25.6	Duplicate
	9/6/2018	1,182.3	µg/m³	<238	<295	<46.0	<48.8	<40.5	<40.5	<39.7	65.7	<39.6	215	487	<76.6	<139	205	<118	946	<25.6	- -
TSSV-04-M																					
	9/10/2018	1,530.9	µg/m³	<59.5	<73.8	50.8	81.5	18.0	<10.1	<9.93	14.3	<9.90	371	364	694	<34.7	1,210	<29.5	559	<6.40	- -
TSSV-04-D																					
	9/10/2018	1,330.0	µg/m³	<11,900	<14,800	<2,300	<2,440	<2,030	<2,030	<1,990	3,210	<1,980	<2,810	<4,950	6,130	<6,940	<6,780	<5,900	56,900	<1,280	- -
TSSV-04-PZ																					
	9/10/2018	1,182.2	µg/m³	<2,380	<2,950	<460	<488	<405	<405	2,600	3,390	<396	<562	<990	14,000	<1,390	3,020	<1,180	24,400	<256	- -
TSSV-05-D																					
	9/7/2018	1,335.1	µg/m³	<119	<148	<23.0	<24.4	27.5	<20.3	<19.9	<19.8	<19.8	323	692	64.3	<69.4	195	<59.0	77.9	<12.8	- -
TSSV-05-PZ																					
	9/12/2018	1,185.1	µg/m³	<1,190	<1,480	<230	<244	<203	<203	222	<198	<198	933	1,580	965	<694	848	<590	23,000	<128	- -
TSSV-06-S																					
	9/7/2018	1,726.5	µg/m³	<238	<295	<46.0	110	<40.5	<40.5	<39.7	<39.6	<39.6	<56.2	<99.0	1,650	<139	1,170	<118	10,600	<25.6	- -

Table 6. Soil Vapor Analytical Results - Wellhead TO-15 Analysis Data

Cave Creek Landfill, Maricopa County

Well Name	Sample Date	Sample Elevation (ft amsl)	Units	Acetone	2-Butanone (MEK)	Chlorobenzene	Chloroform	1,1-Dichloroethane	1,2-Dichloroethane	1,1-Dichloroethene	cis-1,2-Dichloroethene	trans-1,2-Dichloroethene	Freon 11	Freon 12	Freon 113	Methylene chloride	Tetrachloroethene	Tetrahydrofuran	Trichloroethene	Vinyl Chloride	Comments
TSSV-06-M																					
	9/7/2018	1,526.5	µg/m³	35.9	<29.5	<4.60	<4.88	<4.05	<4.05	<3.97	<3.96	<3.96	<5.62	<9.90	<7.66	<13.9	<13.6	<11.8	<5.37	<2.56	- -
TSSV-06-D																					
	9/7/2018	1,326.5	µg/m³	<1,190	<1,480	377	1,480	<203	<203	<199	6,220	<198	<281	<495	9,580	822	3,370	<590	40,800	<128	- -
TSSV-07-S																					
	9/7/2018	1,729.5	µg/m³	<238	<295	<46.0	79.1	<40.5	<40.5	<39.7	<39.6	<39.6	425	<99.0	88.9	<139	289	<118	1,970	<25.6	- -
TSSV-07-M																					
	9/7/2018	1,529.5	µg/m³	<1,190	<1,480	1,100	<244	<203	<203	6,000	380	<198	422	787	452	<694	2,240	<590	8,700	<128	- -
TSSV-07-D																					
	9/8/2018	1,329.5	µg/m³	<59,500	<73,800	<11,500	<12,200	<10,100	<10,100	69,500	<9,900	<9,900	<14,100	<24,800	45,200	<34,700	<33,900	<29,500	494,000	<6,400	- -
TSSV-07-PZ																					
	9/8/2018	1,179.0	µg/m³	<11,900	<14,800	<2,300	<2,440	<2,030	<2,030	33,400	31,000	<1,980	<2,810	<4,950	54,400	<6,940	18,900	<5,900	214,000	4,630	- -

Notes: Grey text indicates a non-detected compound
µg/m³ - micrograms per cubic meter
ft amsl - feet above mean sea level
- = data not applicable or not available

Table 7. Soil Vapor Analytical Results - Process Sample TO-15 Analysis Data

Cave Creek Landfill, Maricopa County

Sample Location Identifier	Sample Date	Sample Elevation (ft amsl)	Units	Acetone	2-Butanone (MEK)	Chloroform	Chlorobenzene	1,1-Dichloroethane	1,2-Dichloroethane	1,1-Dichloroethene	cis-1,2-Dichloroethene	trans-1,2-Dichloroethene	Freon 11	Freon 12	Freon 113	Methylene chloride	Tetrachloroethene	Tetrahydrofuran	Trichloroethene	Vinyl Chloride	Comment
SP-01																					
	7/18/2018	-	µg/m³	<23,800	<29,500	<4,880	6,620	<4,050	<4,050	192,000	38,900	<3,960	<5,620	<9,900	130,000	200,000	89,500	<11,800	644,000	3,280	- -
	8/15/2018	-	µg/m³	<59,500	<73,800	<12,200	<11,500	<10,100	<10,100	162,000	33,100	<9,900	<14,100	<24,800	121,000	192,000	86,100	<29,500	490,000	<6,400	- -
	9/19/2018	-	µg/m³	<59,500	<73,800	<12,200	<11,500	<10,100	<10,100	182,000	28,900	<9,900	<14,100	<24,800	143,000	243,000	97,600	<29,500	580,000	<6,400	- -
SP-02																					
	7/18/2018	-	µg/m³	<11,900	<14,800	<2,440	<2,300	<2,030	<2,030	305,000	<1,980	<1,980	3,200	7,330	<3,830	249,000	<6,780	<5,900	<2,690	3,330	- -
	8/15/2018	-	µg/m³	<11,900	<14,800	<2,440	<2,300	<2,030	<2,030	128,000	2,100	<1,980	<2,810	5,100	<3,830	132,000	<6,780	<5,900	<2,690	1,280	- -
	9/19/2018	-	µg/m³	<11,900	<14,800	<2,440	<2,300	<2,030	<2,030	<1,990	<1,980	<1,980	<2,810	6,680	<3,830	192,000	<6,780	<5,900	<2,690	1,560	- -
SP-03																					
	7/18/2018	-	µg/m³	<11,900	<14,800	<2,440	<2,300	<2,030	<2,030	<1,990	<1,980	<1,980	<2,810	7,080	<3,830	293,000	<6,780	<5,900	<2,690	3,380	- -
	8/15/2018	-	µg/m³	<11,900	<14,800	<2,440	<2,300	<2,030	<2,030	<1,990	<1,980	<1,980	<2,810	7,670	<3,830	253,000	<6,780	<5,900	<2,690	1,640	- -
	9/19/2018	-	µg/m³	<238	<295	<48.8	<46.0	<40.5	<40.5	<39.7	<39.6	<39.6	<56.2	9,950	<76.6	2,130	<136	<118	<53.7	1,780	- -
SP-04																					
	7/18/2018	-	µg/m³	<11,900	<14,800	<2,440	<2,300	<2,030	<2,030	<1,990	<1,980	<1,980	<2,810	6,730	<3,830	319,000	<6,780	<5,900	<2,690	<1,280	- -
	8/15/2018	-	µg/m³	<11,900	<14,800	<2,440	<2,300	<2,030	<2,030	<1,990	<1,980	<1,980	<2,810	6,580	<3,830	171,000	<6,780	<5,900	<2,690	<1,280	- -
	9/19/2018	-	µg/m³	<2,380	<14,800	<488	524	<2,030	<2,030	5,360	974	<396	<562	8,370	4,570	9,540	7,390	<1,180	2,690	1,240	- -

Notes: Grey text indicates a non-detected compound
µg/m³ - micrograms per cubic meter
ft amsl - feet above mean sea level
- = data not applicable or not available

Table 8. Soil Vapor Extraction Mass Removal

Cave Creek Landfill, Maricopa County

Date of Reading [Mon-DD-YR]	Blower Hour Meter Reading [hrs]	Time Operated Since Last Reading [hrs]	System Uptime [%]	VOC Concentration in Extracted Soil Vapor [mg/m^3]	SVE Flow Rate [scfm]	Hourly Rate of VOC Mass Extracted [lbs/hr]	VOC Mass Removed Since Last Reading [lbs]	Total VOC Mass Extracted Since Startup [lbs]
1/17/2018	15,758	273	41	460	944	1.63	358	25,413
2/23/2018	16,385	627	71	417	932	1.46	1,019	26,432
3/19/2018	16,908	524	91	503	933	1.76	762	27,194
4/23/2018	17,481	573	68	628	918	2.16	1,006	28,200
5/23/2018	18,124	642	89	535	889	1.78	1,387	29,588
6/20/2018	18,353	229	34	398	910	1.36	408	29,996
7/18/2018	18,900	548	82	875	899	2.95	744	30,739
8/15/2018	19,506	606	90	685	914	2.35	1,786	32,525
9/19/2018	20,080	574	68	791	917	2.72	1,346	33,871

Notes:

Startup of the full-scale SVE system occurred on September 15, 2015. Mass totals presented in this table reflect full-scale SVE operations only.

Acronyms and Abbreviations:

DD - day of the month
hrs - hours
lbs - pounds
lbs/hr - pounds per hour
mg/m^3 - milligrams per cubic meter
Mon - month
scfm - standard cubic feet per minute
YR - year
VOC - Volatile Organic Compound per Maricopa County Air Quality Department Rule 100 Section 200.113

FIGURES

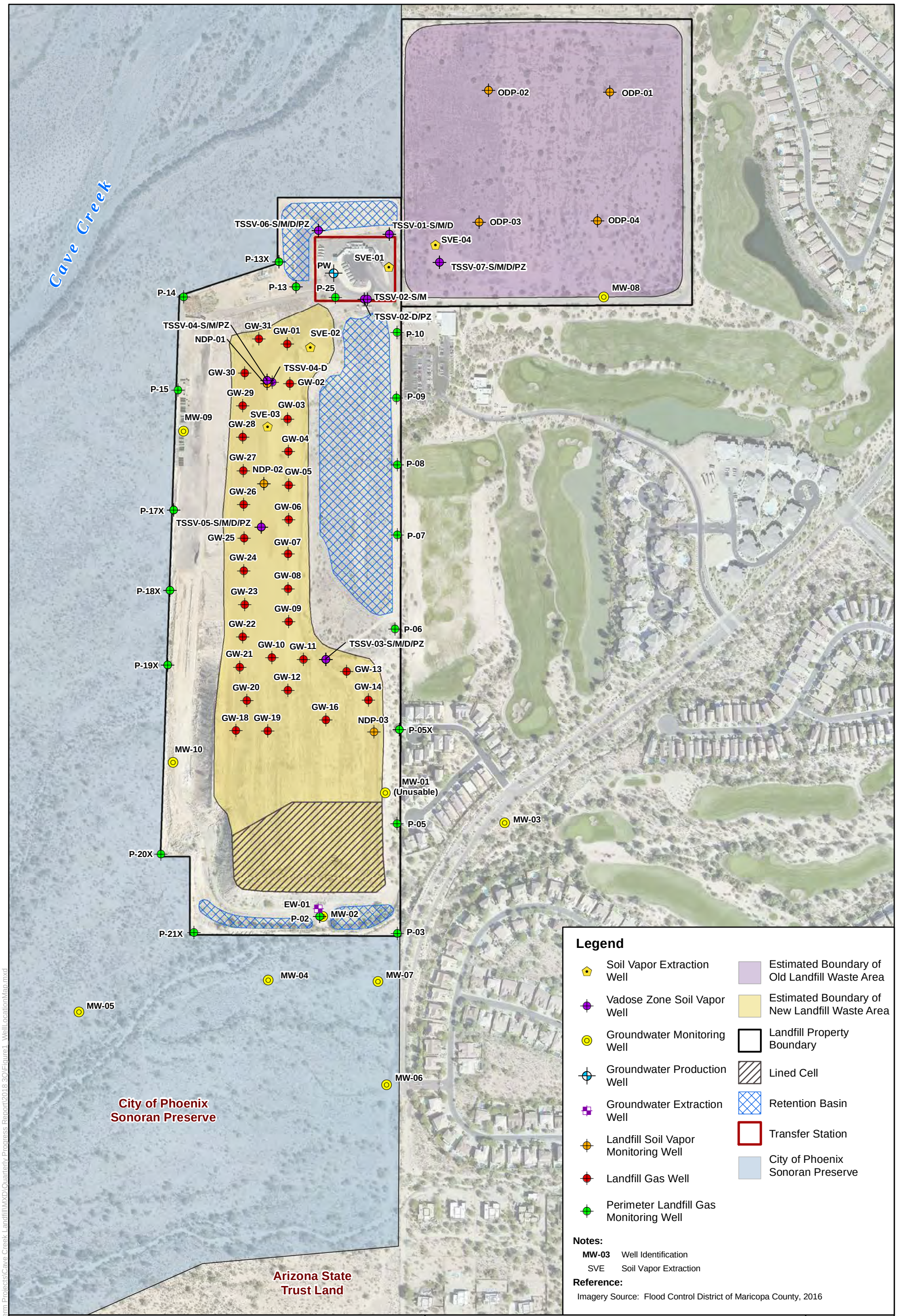

Job No.	1420172034
PM:	NC
Date:	11/19/2018
Scale:	1" = 400'

The map shown here has been created with all due and reasonable care and is strictly for use with Wood Environment & Infrastructure Solutions, Inc. Project Number 1420172034. This map has not been certified by a licensed land surveyor, and any third party use of this map comes without warranties of any kind. Wood Environment & Infrastructure Solutions, Inc. assumes no liability, direct or indirect, whatsoever for any such third party or unintended use.

2018 3rd Quarter Progress Report
Maricopa County Cave Creek Landfill
Phoenix, Arizona

Well Map

FIGURE
1

wood.

Path: X:\Projects\20-Longterm Projects\Cave Creek Landfill\MXD\Quarterly Progress Report\2018 3Q\Figure1_WellLocationMap.mxd

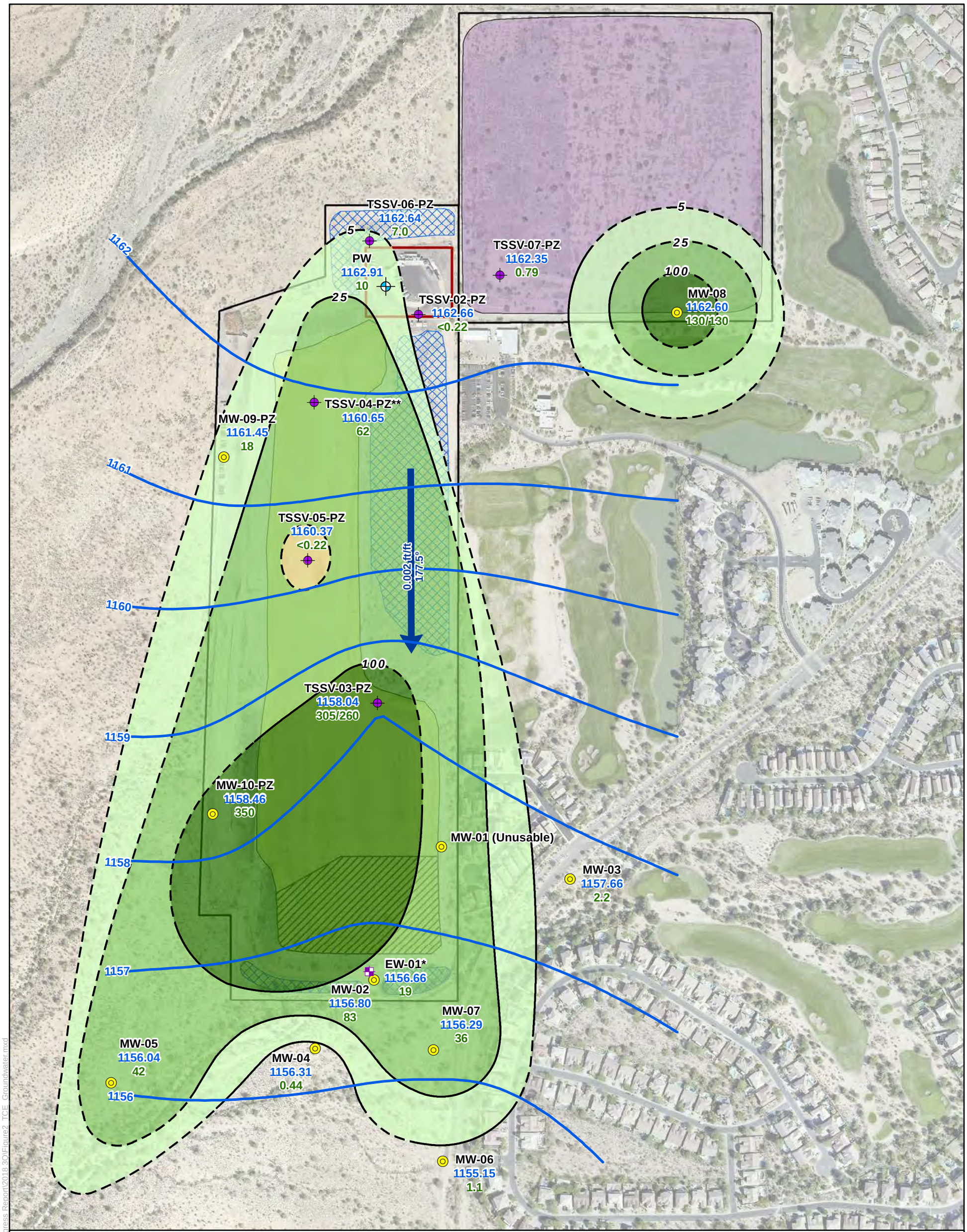

Legend

TCE Concentrations (µg/L) in Groundwater
(Dashed Where Inferred)

- 5-25
- 25-100
- 100-500
- Nested Vapor Well / Piezometer
- Groundwater Monitoring Well
- Production Well
- Groundwater Extraction Well
- Groundwater Elevation Contour (ft amsl) based upon August 2018 Data
- Groundwater Flow Direction (degrees) Groundwater Flow Gradient (ft/ft)
- Estimated Boundary of Old Landfill Waste Area
- Estimated Boundary of New Landfill Waste Area
- Landfill Property Boundaries
- Lined Cell
- Retention Basin
- Transfer Station

Notes:

MW-06	Well Identification
1155.15	Groundwater Elevation (ft amsl) collected in August 2018
1.1	TCE Concentration (µg/L) collected in August 2018
130/130	Original/Duplicate Results
*	EW-01 has a different screen interval and concentrations in this well are not comparable to the others on this figure.
**	Not used to generate water level elevation contours or gradient
µg/L	microgram per liter
ft amsl	feet above mean sea level
TCE	Trichloroethene

Reference:
Imagery Source: Flood Control District of Maricopa County, 2016

0 200 400 800 Feet

Job No.	1420172034
PM:	NC
Date:	11/27/2018
Scale:	1" = 400'

N

The map shown here has been created with all due and reasonable care and is strictly for use with Wood Environment & Infrastructure Solutions Inc. Project Number 1420172034. This map has not been certified by a licensed land surveyor, and any third party use of this map comes without warranties of any kind. Wood Environment & Infrastructure Solutions Inc. assumes no liability, direct or indirect, whatsoever for any such third party or unintended use.

2018 3rd Quarter Progress Report
Maricopa County Cave Creek Landfill
Phoenix, Arizona

Estimated Extent of TCE Plume in Groundwater August 2018

FIGURE **2**

wood.

Path: X:\Projects\20-Londfern Projects\Cave Creek Landfill\MXD\Quarterly Progress Report\2018 3Q\Figure2_TCE_Groundwater.mxd

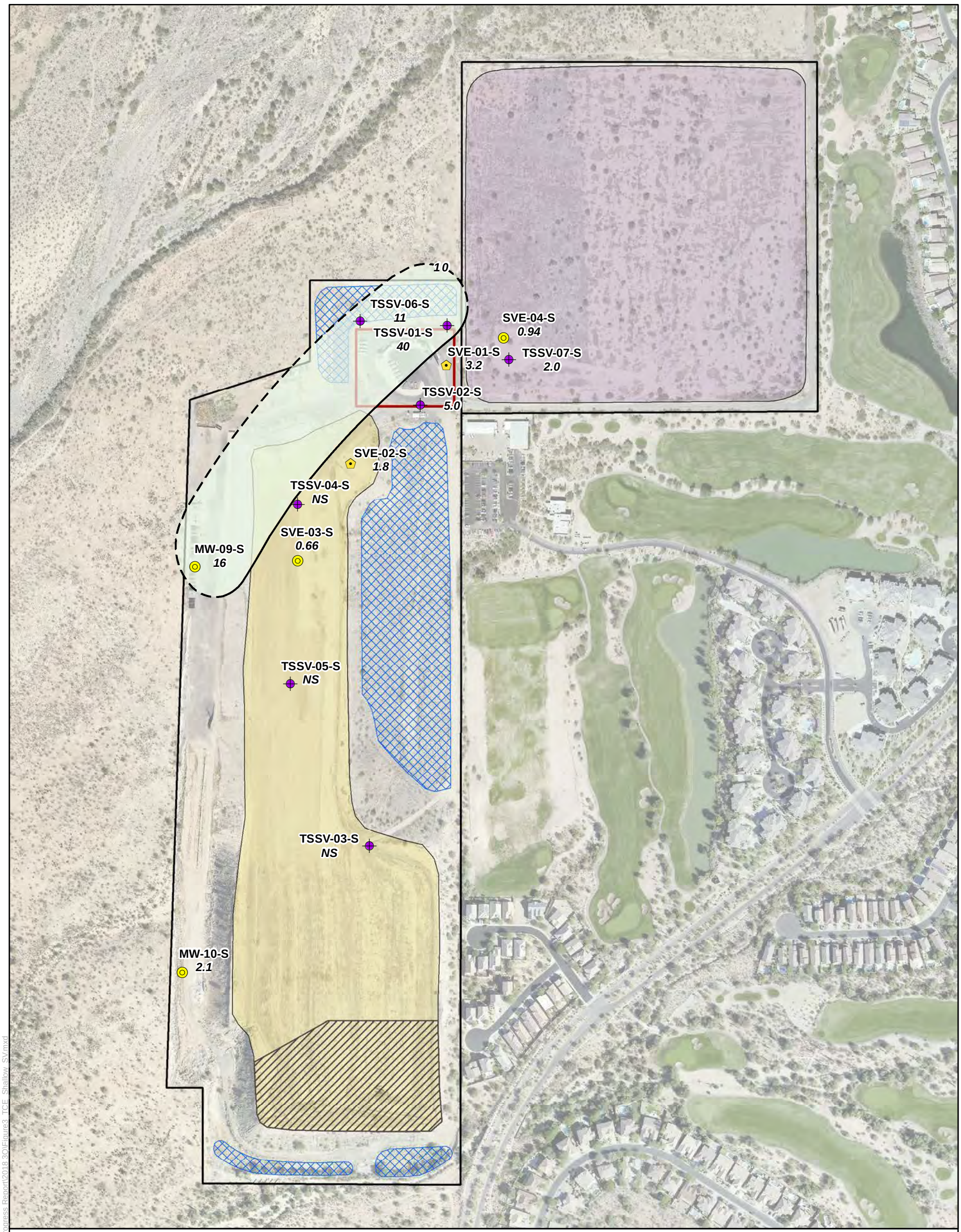

Legend

TCE Concentrations (mg/m³) in Soil Vapor

(Dashed Where Inferred)

10-100

- Monitoring Well
- Soil Vapor Extraction Well
- Vadose Zone Soil Vapor Well
- Estimated Boundary of Old Landfill Waste Area
- Estimated Boundary of New Landfill Waste Area
- Landfill Property Boundaries
- Lined Cell
- Retention Basin
- Transfer Station

Notes:

TSSV-02-S	Well Identification
5.0	TCE soil gas result (mg/m³) collected September 2018
ft amsl	Feet above mean sea level
mg/m³	Milligram per cubic meter
NS	Not Sampled
TCE	Trichloroethene

Range of Vapor Well Screen Intervals: 1702-1750 ft amsl

Reference:

Imagery Source: Flood Control District of Maricopa County, 2016

0 175 350 525 700 Feet

Job No.:	1420172034
PM:	NC
Date:	11/27/2018
Scale:	1" = 350'

N

The map shown here has been created with all due and reasonable care and is strictly for use with Wood Environment & Infrastructure Solutions, Inc. Project Number 1420172034. This map has not been certified by a licensed land surveyor, and any third party use of this map comes without warranties of any kind. Wood Environment & Infrastructure Solutions, Inc. assumes no liability, direct or indirect, whatsoever for any such third party or unintended use.

2018 3rd Quarter Progress Report
Maricopa County Cave Creek Landfill
Phoenix, Arizona

Shallow Zone TCE Soil Vapor Concentrations September 2018

FIGURE **3**

wood.

Path: X:\Projects\20-Longterm Projects\Cave Creek Landfill\MXD\Quarterly Progress Report\2018 3Q\Figure3_TCE_Shallow_SV.mxd

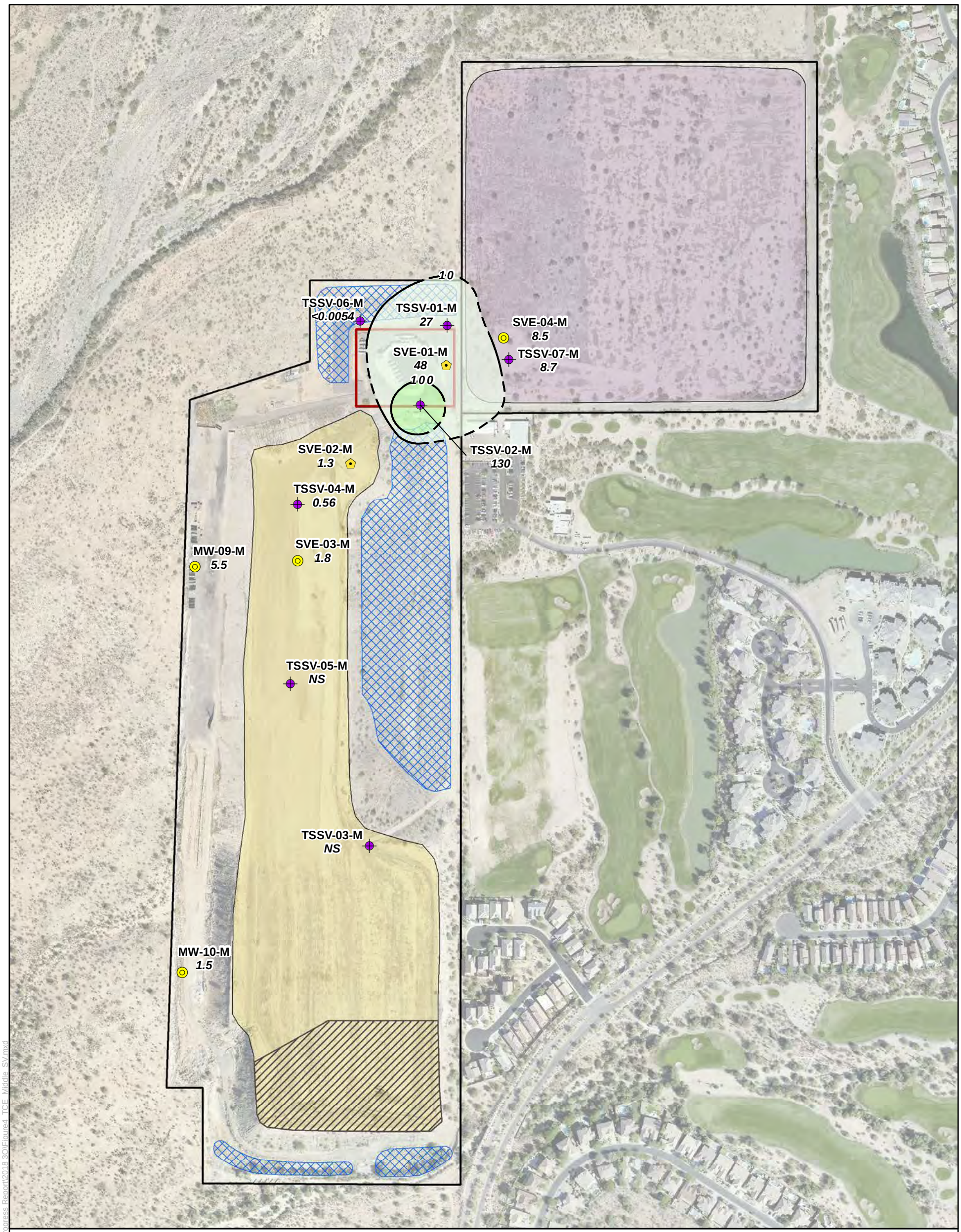

Legend

TCE Concentrations (mg/m³) in Soil Vapor
(Dashed Where Inferred)

10-100
100-250

- Monitoring Well
- Soil Vapor Extraction Well
- Vadose Zone Soil Vapor Well
- Estimated Boundary of Old Landfill Waste Area
- Estimated Boundary of New Landfill Waste Area
- Landfill Property Boundaries
- Lined Cell
- Retention Basin
- Transfer Station

Notes:

TSSV-01-M	Well Identification
27	TCE soil gas result (mg/m³) collected September 2018
ft amsl	Feet above mean sea level
mg/m³	Milligram per cubic meter
NS	Not Sampled
TCE	Trichloroethene

Range of Vapor Well Screen Intervals: 1522-1600 ft amsl

Reference:
Imagery Source: Flood Control District of Maricopa County, 2016

0 175 350 525 700 Feet

Job No.:	1420172034
PM:	NC
Date:	11/27/2018
Scale:	1" = 350'

N

The map shown here has been created with all due and reasonable care and is strictly for use with Wood Environment & Infrastructure Solutions, Inc. Project Number 1420172034. This map has not been certified by a licensed land surveyor, and any third party use of this map comes without warranties of any kind. Wood Environment & Infrastructure Solutions, Inc. assumes no liability, direct or indirect, whatsoever for any such third party or unintended use.

2018 3rd Quarter Progress Report
Maricopa County Cave Creek Landfill
Phoenix, Arizona

Middle Zone TCE Soil Vapor Concentrations
September 2018

FIGURE
4

wood.

Path: X:\Projects\20-Longterm Projects\Cave Creek Landfill\MXD\Quarterly Progress Report\2018 3Q\Figure4_TCE_Middle_SV.mxd

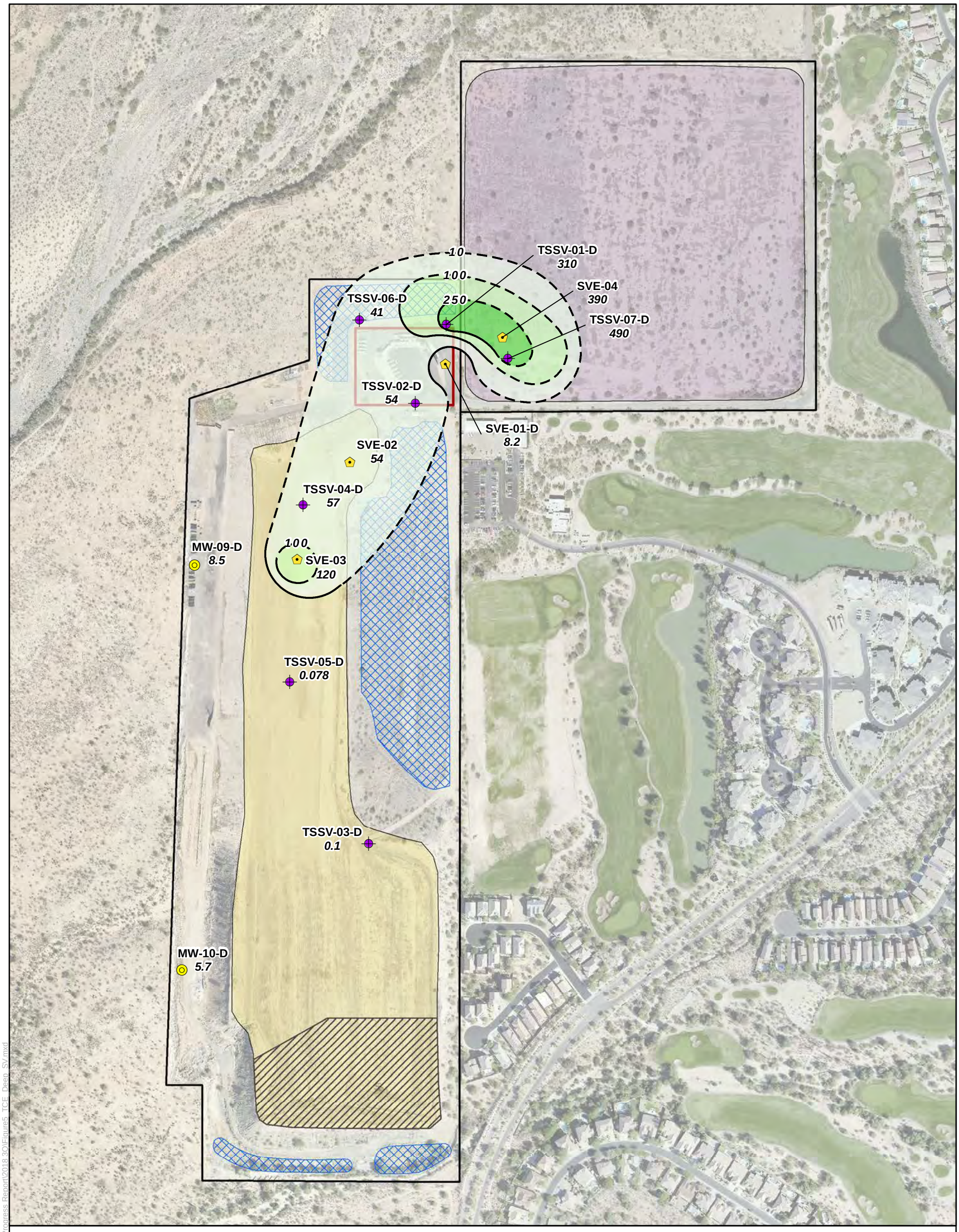

Legend

TCE Concentrations (mg/m³) in Soil Vapor

(Dashed Where Inferred)

10-100 | 100-250 | 250-500

- Monitoring Well
- Soil Vapor Extraction Well
- Vadose Zone Soil Vapor Well
- Estimated Boundary of Old Landfill Waste Area
- Estimated Boundary of New Landfill Waste Area
- Landfill Property Boundaries
- Lined Cell
- Retention Basin
- Transfer Station

Notes:

TSSV-01-D	Well Identification
310	TCE soil gas result (mg/m³) September 2018
ft amsl	Feet above mean sea level
mg/m³	Milligram per cubic meter
NS	Not Sampled
TCE	Trichloroethylene

Range of Vapor Well Screen Intervals: 1282-1332 ft amsl

Reference:

Imagery Source: Flood Control District of Maricopa County, 2016

0 175 350 525 700 Feet

Job No.:	1420172034
PM:	NC
Date:	11/27/2018
Scale:	1" = 350'

N

The map shown here has been created with all due and reasonable care and is strictly for use with Wood Environment & Infrastructure Solutions, Inc. Project Number 1420172034. This map has not been certified by a licensed land surveyor, and any third party use of this map comes without warranties of any kind. Wood Environment & Infrastructure Solutions, Inc. assumes no liability, direct or indirect, whatsoever for any such third party or unintended use.

2018 3rd Quarter Progress Report
Maricopa County Cave Creek Landfill
Phoenix, Arizona

Deep Zone TCE Soil Vapor Concentrations
September 2018

FIGURE
5

wood.

Path: X:\Projects\20-Longterm Projects\Cave Creek Landfill\MXD\Quarterly Progress Report\2018 3Q\Figure5_TCE_Deep_SV.mxd

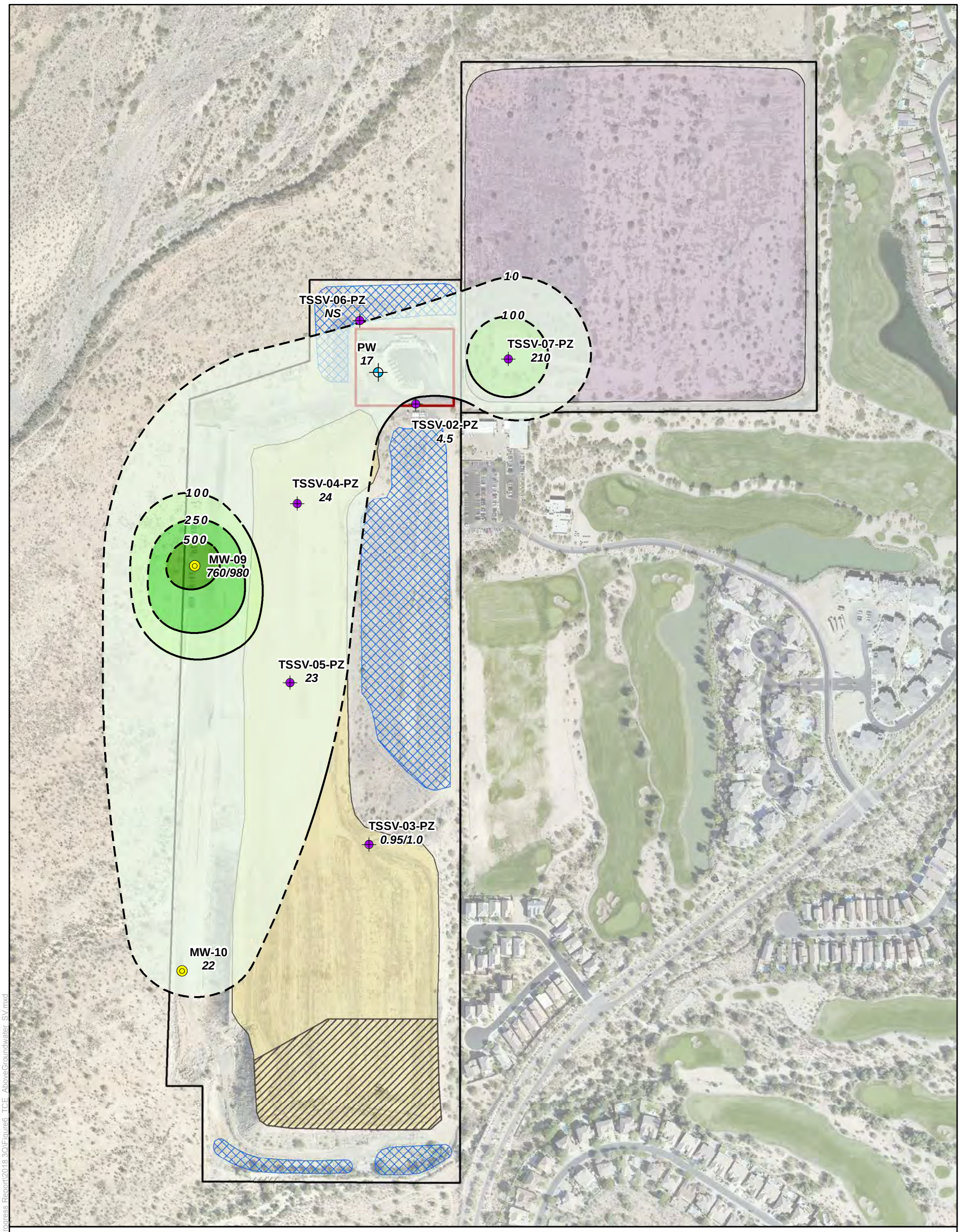

Legend

TCE Concentrations (mg/m³) in Soil Vapor
(Dashed Where Inferred)

10-100 | 100-250 | 250-500 | ≥500

- Nested Vapor Well / Piezometer
- Production Well
- Estimated Boundary of Old Landfill Waste Area
- Estimated Boundary of New Landfill Waste Area
- Groundwater Monitoring Well
- Groundwater Extraction Well
- Landfill Property Boundaries
- Lined Cell
- Retention Basin
- Transfer Station

Notes:

TSSV-02-PZ	Well Identification
4.5	TCE soil gas result (mg/m³) collected September 2018
760/980	Original/Duplicate Results
ft amsl	Feet above mean sea level
mg/m³	Milligram per cubic meter
NS	Not Sampled
TCE	Trichloroethene

Range of Vapor Well Screen Intervals: 1162-1201 ft amsl

Reference:
Imagery Source: Flood Control District of Maricopa County, 2016

0 175 350 525 700 Feet

Job No.:	1420172034
PM:	NC
Date:	11/27/2018
Scale:	1" = 350'

N

The map shown here has been created with all due and reasonable care and is strictly for use with Wood Environment & Infrastructure Solutions, Inc. Project Number 1420172034. This map has not been certified by a licensed land surveyor, and any third party use of this map comes without warranties of any kind. Wood Environment & Infrastructure Solutions, Inc. assumes no liability, direct or indirect, whatsoever for any such third party or unintended use.

2018 3rd Quarter Progress Report
Maricopa County Cave Creek Landfill
Phoenix, Arizona

Above Water Table TCE Soil Vapor Concentrations September 2018

FIGURE **6**

wood.

Path: X:\Projects\20-Longterm Projects\Cave Creek Landfill\MXD\Quarterly Progress Report\2018 3Q\Figure6_TCE_AboveGroundwater_SV.mxd

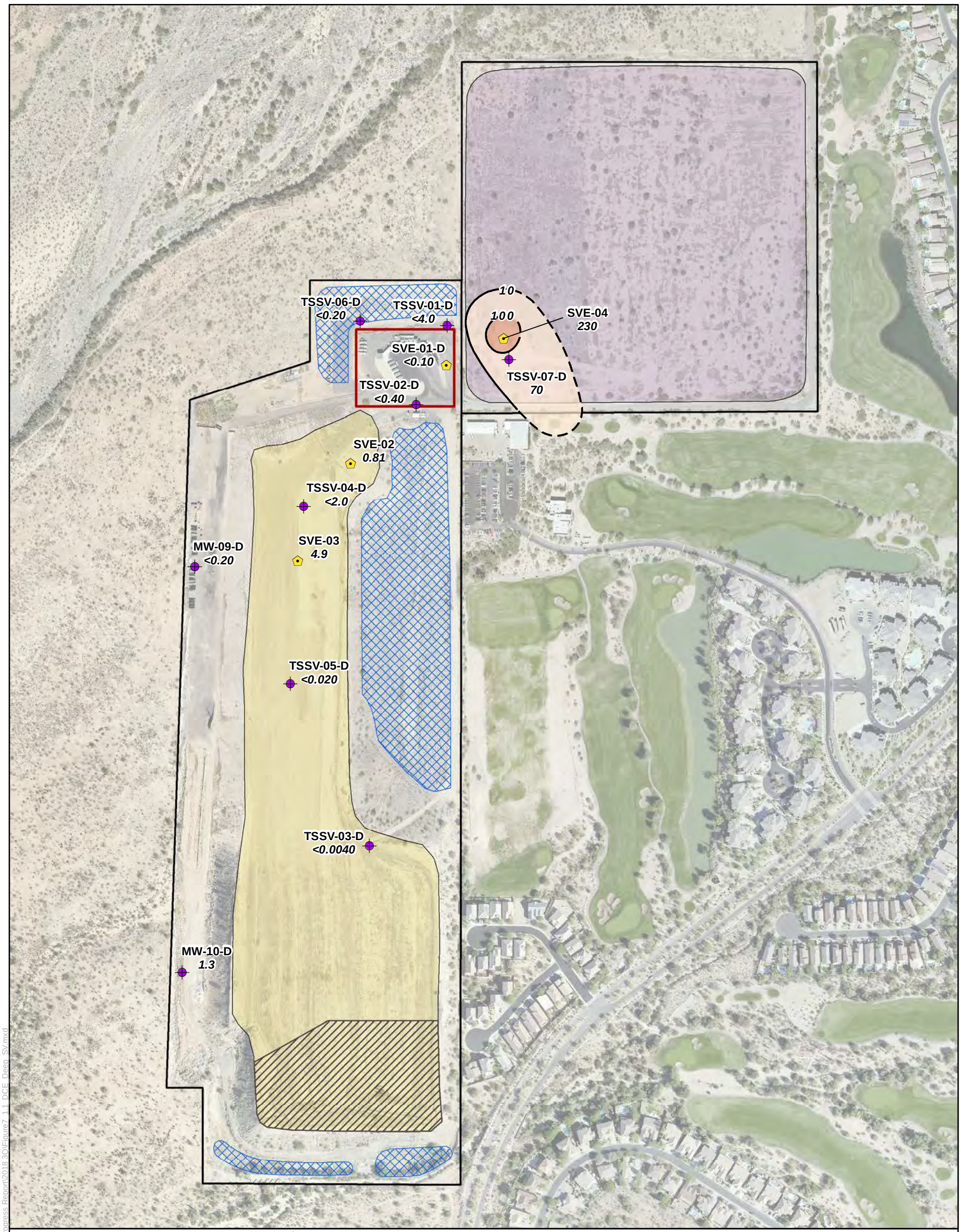

Legend

1,1-DCE Concentrations (mg/m³) in Soil Vapor

10-100

100-250

Production Well

Monitoring Well

Soil Vapor Extraction Well

Vadose Zone Soil Vapor Well

Estimated Boundary of Old Landfill Waste Area

Estimated Boundary of New Landfill Waste Area

Landfill Property Boundaries

Lined Cell

Retention Basin

Transfer Station

Notes:

SVE-03-D	Well Identification
4.9	1,1-DCE soil gas result (mg/m³) collected September 2018
ft amsl	Feet above mean sea level
1,1-DCE	1,1-Dichloroethene
mg/m³	Milligram per cubic meter

Range of Vapor Well Screen Intervals: 1327 -1500 ft amsl

Reference:

Imagery Source: Flood Control District of Maricopa County, 2016

0 175 350 525 700 Feet

Job No.:	1420172034
PM:	NC
Date:	11/27/2018
Scale:	1" = 350'

N

The map shown here has been created with all due and reasonable care and is strictly for use with Wood Environment & Infrastructure Solutions, Inc. Project Number 1420172034. This map has not been certified by a licensed land surveyor, and any third party use of this map comes without warranties of any kind. Wood Environment & Infrastructure Solutions, Inc. assumes no liability, direct or indirect, whatsoever for any such third party or unintended use.

2018 3rd Quarter Progress Report
Maricopa County Cave Creek Landfill
Phoenix, Arizona

Deep Zone 1,1-DCE Soil Vapor Concentrations September 2018

FIGURE **7**

wood.

Path: X:\Projects\20-Longterm Projects\Cave Creek Landfill\MXD\Quarterly Progress Report\2018 3Q\Figure7_1,1_DCE_Deep_SV.mxd

PRESSURE FLOW THROUGH CARBON ADSORPTION SYSTEM

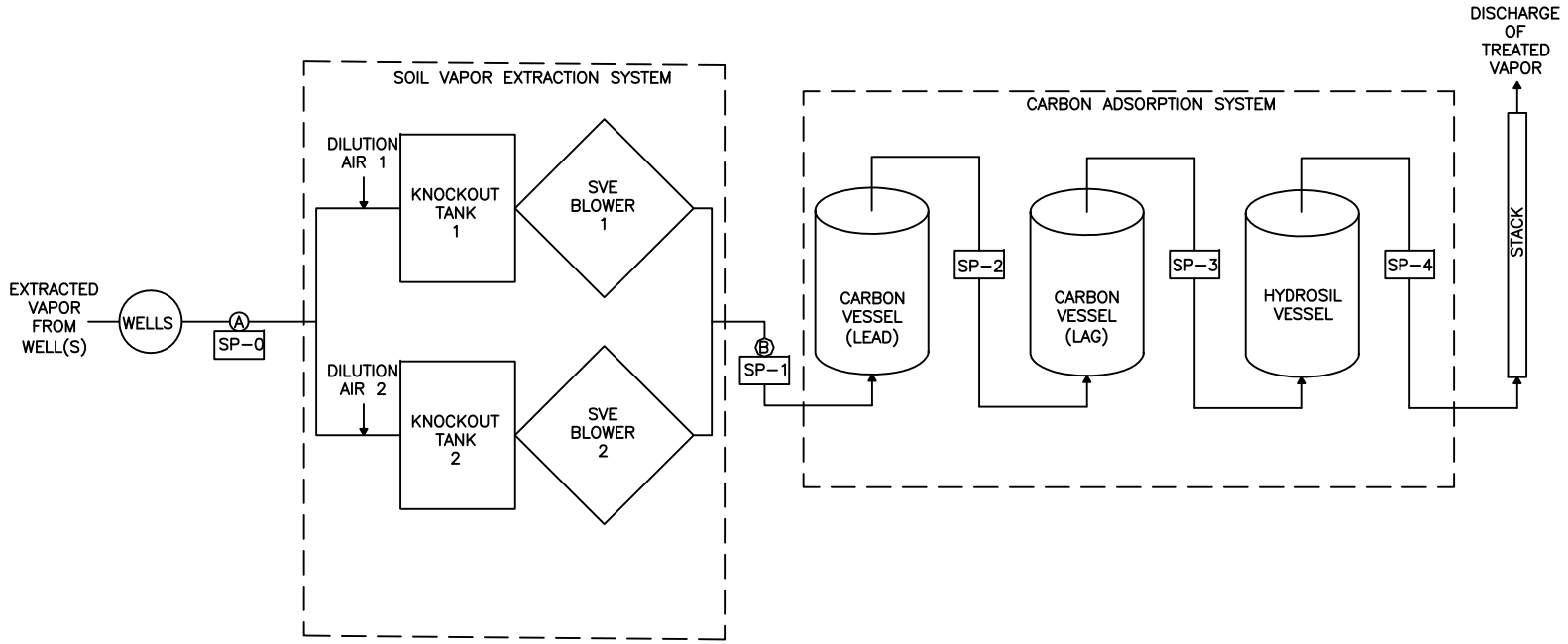

LEGEND

- Ⓐ SYSTEM FLOW MEASUREMENT (PRE-DILUTION LOCATION)
- Ⓑ SYSTEM FLOW MEASUREMENT (POST-DILUTION LOCATION)
- SP-0 SYSTEM INLET SAMPLE LOCATION
- SP-1 CAS INLET SAMPLE LOCATION
- SP-2 CAS LEAD VESSEL OUTLET SAMPLE LOCATION
- SP-3 CAS LAG VESSEL OUTLET SAMPLE LOCATION
- SP-4 CAS OUTLET SAMPLE LOCATION

CLIENT	MARICOPA COUNTY				
PROJECT	CAVE CREEK LANDFILL				
TITLE	SVE SYSTEM PROCESS FLOW DIAGRAM – PRESSURE FLOW				
DESIGNED BY	BJN	CHECKED BY	AY	DATE	ISSUED FOR
DRAWN BY	BJN	APPROVED BY	NC	11/15/16	FINAL
FILENAME FIGURE 8		FIGURE No. 8.1	REV 1	PROJECT NO. 14-2014-2020	

amec foster wheeler

G:\Environmental-Development\2014 Projects\14-2014-2020 Cave Creek Landfill FY 2015\5.0_Technical\5.1_Reports_Deliverables\5.1.27_SVE Expansion OMM\Support-6/1/2017 3:02 PM

VACUUM FLOW THROUGH CARBON ADSORPTION SYSTEM

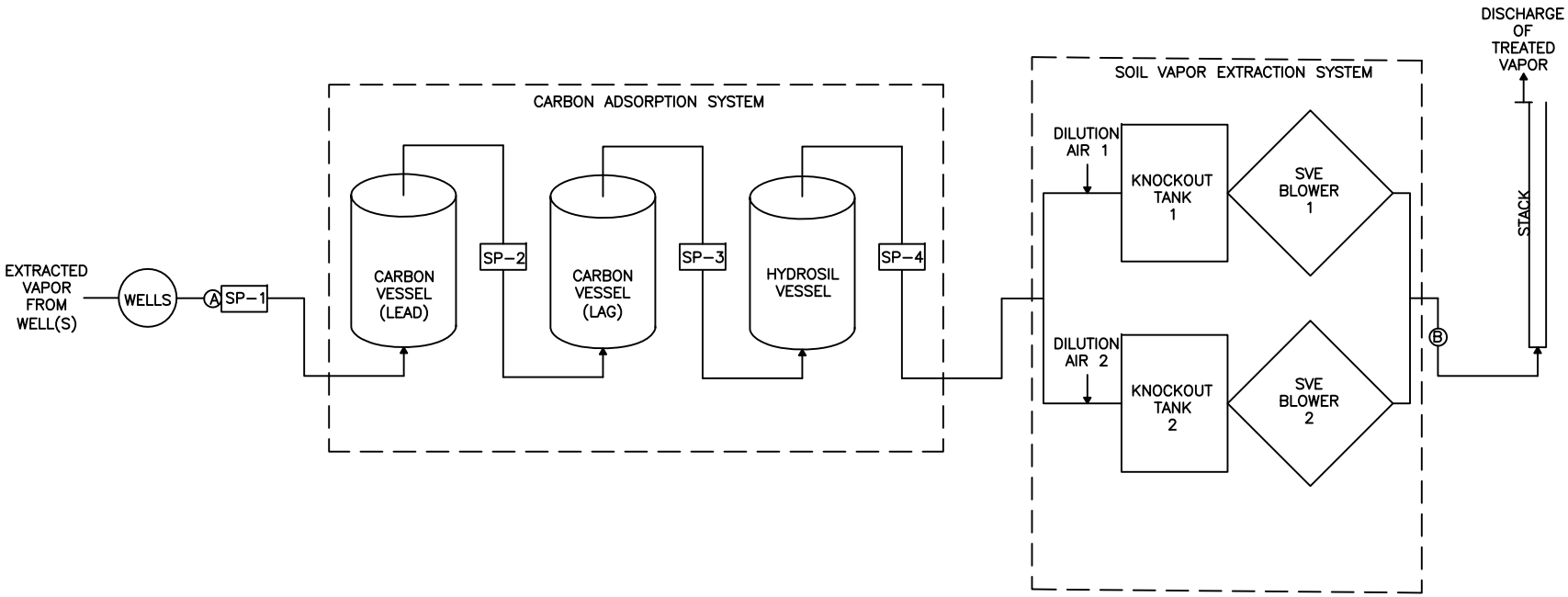

LEGEND

- Ⓐ SYSTEM FLOW MEASUREMENT (PRE-DILUTION LOCATION)
- Ⓑ SYSTEM FLOW MEASUREMENT (POST-DILUTION LOCATION)
- SP-0 SYSTEM INLET SAMPLE LOCATION
- SP-1 CAS INLET SAMPLE LOCATION
- SP-2 CAS LEAD VESSEL OUTLET SAMPLE LOCATION
- SP-3 CAS LAG VESSEL OUTLET SAMPLE LOCATION
- SP-4 CAS OUTLET SAMPLE LOCATION

CLIENT	MARICOPA COUNTY				
PROJECT	CAVE CREEK LANDFILL				
TITLE	SVE SYSTEM PROCESS FLOW DIAGRAM – VACUUM FLOW				
DESIGNED BY	BJN	CHECKED BY	AY	DATE	ISSUED FOR
DRAWN BY	BJN	APPROVED BY	NC	11/15/16	FINAL
FILENAME	FIGURE 8	FIGURE No.	8.2	REV 1	PROJECT NO. 14-2014-2020

amec foster wheeler

G:\Environmental-Development\2014 Projects\14-2014-2020 Cave Creek Landfill FY 2015\5.0_Technical\5.1_Reports_Deliverables\5.1.27_SVE Expansion OMM\Support-6/1/2017 3:02 PM

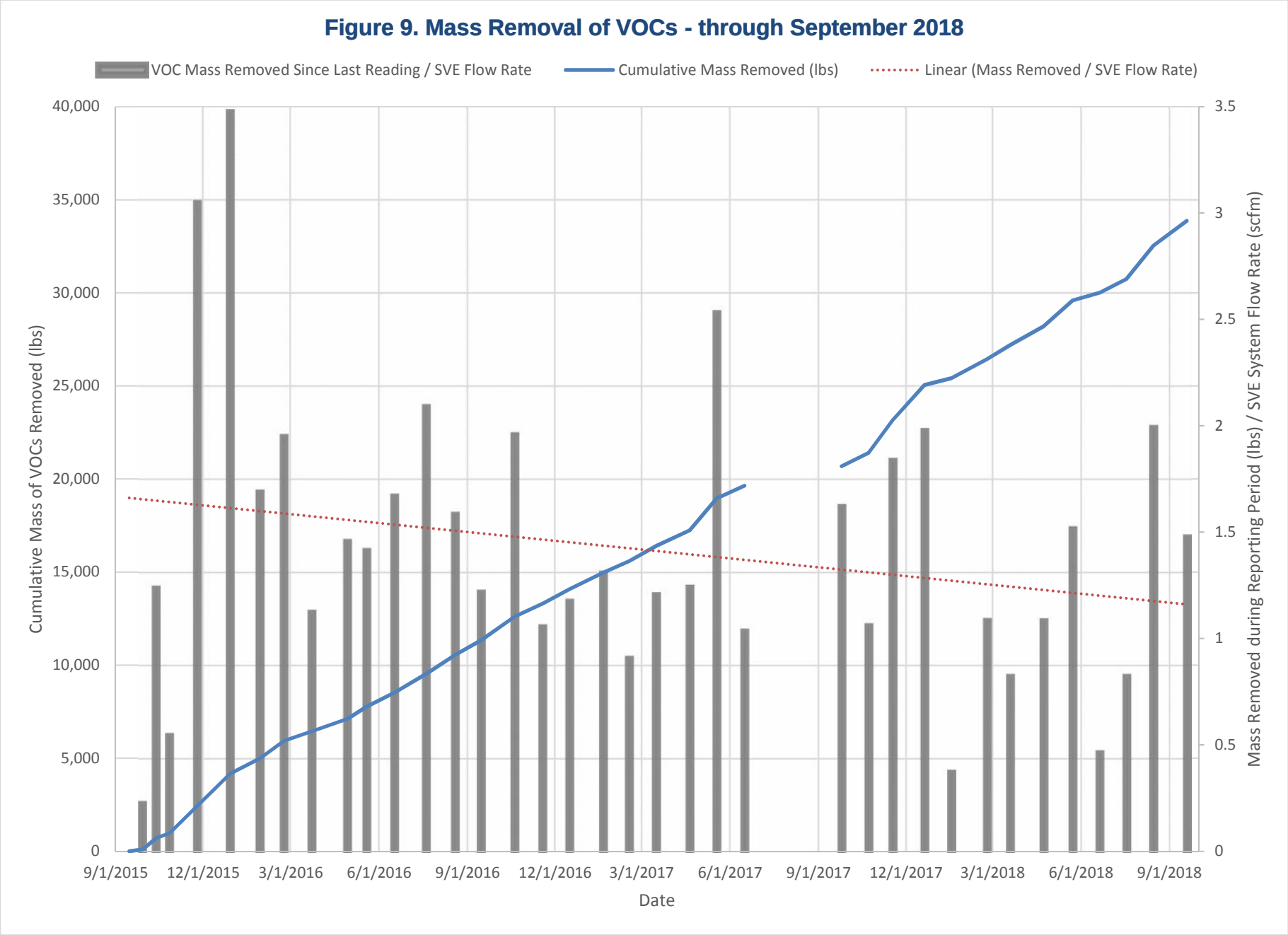
Figure 9. Mass Removal of VOCs - through September 2018
VOC Mass Removed Since Last Reading / SVE Flow Rate
Cumulative Mass Removed (lbs)
Linear (Mass Removed / SVE Flow Rate)
Cumulative Mass of VOCs Removed (lbs)
Mass Removed during Reporting Period (lbs) / SVE System Flow Rate (scfm)
40,000
35,000
30,000
25,000
20,000
15,000
10,000
5,000
0
3.5
3
2.5
2
1.5
1
0.5
0
9/1/2015
12/1/2015
3/1/2016
6/1/2016
9/1/2016
12/1/2016
3/1/2017
6/1/2017
9/1/2017
12/1/2017
3/1/2018
6/1/2018
9/1/2018
Date

APPENDIX A

LABORATORY REPORTS OF ANALYSIS
(ON CD ONLY)

GROUNDWATER

Analytical Report 595904

for

AMEC Foster Wheeler

Project Manager: Samantha Sargent

Cave Creek Landfill

1420172034.**.021**

31-AUG-18

Collected By: Client

2525 West Huntington Drive, Suite 102
Tempe, AZ 85282
Ph: (480) 355-0900

Phoenix (EPA Lab Code: AZ00901): Arizona (AZ0757)
Xenco-Houston (EPA Lab code: TX00122): Arizona (AZ0765)
Xenco-Dallas (EPA Lab code: TX01468): Arizona (AZ0809)

31-AUG-18

Project Manager: **Samantha Sargent**
AMEC Foster Wheeler
4600 E. Washington Suite 600
Phoenix, AZ 85034

Reference: TWA Report No(s): **595904**
Cave Creek Landfill
Project Address:

Samantha Sargent :

We are reporting to you the results of the analyses performed on the samples received under the project name referenced above and identified with the TWA Report Number(s) 595904. All results being reported under this Report Number apply to the samples analyzed and properly identified with a Laboratory ID number. Subcontracted analyses are identified in this report with either the ADHS certification number of the subcontract lab in the analyst ID field, or the complete subcontracted report attached to this report.

Unless otherwise noted in a Case Narrative, all data reported in this Analytical Report are in compliance with ADHS standards. The uncertainty of measurement associated with the results of analysis reported is available upon request. Should insufficient sample be provided to the laboratory to meet the method and ADHS Matrix Duplicate and Matrix Spike requirements, then the data will be analyzed, evaluated and reported using all other available quality control measures.

The validity and integrity of this report will remain intact as long as it is accompanied by this letter and reproduced in full, unless written approval is granted by TransWest Analytical. This report will be filed for at least 5 years in our archives after which time it will be destroyed without further notice, unless otherwise arranged with you. The samples received, and described as recorded in Report No. 595904 will be filed for 45 days, and after that time they will be properly disposed without further notice, unless otherwise arranged with you. We reserve the right to return to you any unused samples, extracts or solutions related to them if we consider so necessary (e.g., samples identified as hazardous waste, sample sizes exceeding analytical standard practices, controlled substances under regulated protocols, etc).

We thank you for selecting TransWest Analytical to serve your analytical needs. If you have any questions concerning this report, please feel free to contact us at any time.

Respectfully,

Skip Harden
Project Manager

Recipient of the Prestigious Small Business Administration Award of Excellence in 1994.
Certified and approved by numerous States and Agencies.
A Small Business and Minority Status Company that delivers SERVICE and QUALITY

Houston - Dallas - Midland - San Antonio - Phoenix - Oklahoma - Latin America

Sample receipt non conformances and comments:

None

Sample receipt non conformances and comments per sample:

None

Analytical non conformances and comments:

Batch: LBA-3061308 VOCs by SW 8260B
L2:
The RPD for 2-Hexanone was outside of acceptance criteria in the LCS/LCSD pair, but within criteria in the MS/MSD pair.

Batch: LBA-3061683 VOCs by SW-846 8260B
N1:
The RPD for Chloroethane was outside of acceptance criteria in the LCS/LCSD and MS/MSD pairs.

R2:
The RPD for the target analyte was outside of acceptance criteria in the MS/MSD but within criteria in the LCS/LCSD.

H1:
Due to instrument issues the VOC for TSSV-07-742-081418 was analyzed outside of holding time.

Flagging Criteria

Arizona Flags

All method blanks, laboratory spikes, and/or matrix spikes met quality control objectives for the parameters associated with this Work Order except as detailed below or on the Data Qualifier page of this report. Data Qualifiers used in this report are in accordance with ADHS Data Qualifiers, Revision 4.0 9/05/2012.
Data qualifiers (flags) contained within this analytical report have been issued to explain a quality control deficiency, and do not affect the quality (validity) of the data unless noted otherwise in the case narrative.

B1 Target analyte detected in method blank at or above the method reporting limit.

D2 Sample required dilution due to high concentration of target analyte.

E4 Concentration estimated. Analyte was detected below laboratory minimum reporting limit (MRL).

E8 Analyte reported to MDL per project specification. Target analyte was not detected in sample.

H1 Sample analysis performed past holding time.

L1 The associated blank spike recovery was above laboratory acceptance limits.

M1 Matrix spike recovery was high; the associated blank spike recovery was acceptable.

N1 See case narrative.

R2 RPD/RSD exceeded the laboratory acceptance limit. See case narrative.

R5 MS/MSD RPD exceeded the laboratory acceptance limit. Recovery met acceptance criteria.

R7 LFB/LFBD RPD exceeded the laboratory acceptance limit. Recovery met acceptance criteria.

S6 Surrogate recovery was below laboratory and method acceptance limits. Re-extraction and/or reanalysis confirms low recovery caused by matrix effect.

T4 Tentatively identified compound. Concentration is estimated and based on the closest internal standard.

Sample Cross Reference 595904

AMEC Foster Wheeler, Phoenix, AZ

Cave Creek Landfill

Sample Id	Matrix	Date Collected	Sample Depth	Lab Sample Id
TSSV-02-733-081518	W	08-15-18 13:30		595904-001
TSSV-03-760-081518	W	08-15-18 11:10		595904-002
TSSV-04-760-081518	W	08-15-18 13:00		595904-003
TSSV-05-760-081518	W	08-15-18 12:10		595904-004
TSSV-06-729-081418	W	08-14-18 08:10		595904-005
TSSV-07-742-081418	W	08-14-18 07:10		595904-006
EW01-740-081518	W	08-15-18 10:10		595904-007
MW09-718-081418	W	08-14-18 09:00		595904-008
MW10-704-081418	W	08-14-18 09:50		595904-009
DUP02-081518	W	08-15-18 11:10		595904-010
MW2-714-081518	W	08-15-18 09:00		595904-011
MW3-714-081318	W	08-13-18 12:30		595904-012
MW4-708-081318	W	08-13-18 09:00		595904-013
MW5-704-081418	W	08-14-18 10:45		595904-014
MW6-720-081318	W	08-13-18 11:00		595904-015
MW7-718-081318	W	08-13-18 10:00		595904-016
MW8-742-081418	W	08-14-18 13:00		595904-017
PW-734-081518	W	08-15-18 14:30		595904-018
DUP01-081418	W	08-14-18 14:30		595904-019
Trip Blank-081518	W	08-15-18 14:30		595904-020
PDB Blank-081518	W	08-15-18 14:30		595904-021

Certificate of Analytical Results 595904

AMEC Foster Wheeler, Phoenix, AZ

Cave Creek Landfill

Sample Id: **TSSV-02-733-081518** Matrix: Water Date Received:08.15.18 17.25
Lab Sample Id: 595904-001 Date Collected: 08.15.18 13.30

Analytical Method: VOCs by SW 8260B Prep Method: SW5030C
Tech: SAD % Solids:
Analyst: SAD Date Prep: 08.29.18 10.30
Seq Number: 3061633 SUB: AZ0765

Parameter	Cas Number	Result	RL	MDL	Units	Analysis Date	Flag	Dil
1,1,1,2-Tetrachloroethane	630-20-6	<0.195	5.00	0.195	ug/L	08.29.18 11.35	E8	1
1,1,1-Trichloroethane	71-55-6	<0.130	5.00	0.130	ug/L	08.29.18 11.35	E8	1
1,1,2,2-Tetrachloroethane	79-34-5	<0.365	5.00	0.365	ug/L	08.29.18 11.35	E8	1
1,1,2-Trichloroethane	79-00-5	<0.272	5.00	0.272	ug/L	08.29.18 11.35	E8	1
1,1-Dichloroethane	75-34-3	<0.182	5.00	0.182	ug/L	08.29.18 11.35	E8	1
1,1-Dichloroethene	75-35-4	<0.178	5.00	0.178	ug/L	08.29.18 11.35	E8	1
1,1-Dichloropropene	563-58-6	<0.257	5.00	0.257	ug/L	08.29.18 11.35	E8	1
1,2,3-Trichlorobenzene	87-61-6	<2.00	5.00	2.00	ug/L	08.29.18 11.35	E8	1
1,2,3-Trichloropropane	96-18-4	<0.214	5.00	0.214	ug/L	08.29.18 11.35	E8	1
1,2,4-Trichlorobenzene	120-82-1	<2.00	5.00	2.00	ug/L	08.29.18 11.35	E8	1
1,2,4-Trimethylbenzene	95-63-6	<0.113	5.00	0.113	ug/L	08.29.18 11.35	E8	1
1,2-Dibromo-3-Chloropropane	96-12-8	<0.707	5.00	0.707	ug/L	08.29.18 11.35	E8	1
1,2-Dibromoethane	106-93-4	<0.380	5.00	0.380	ug/L	08.29.18 11.35	E8	1
1,2-Dichlorobenzene	95-50-1	<0.175	5.00	0.175	ug/L	08.29.18 11.35	E8	1
1,2-Dichloroethane	107-06-2	<0.283	5.00	0.283	ug/L	08.29.18 11.35	E8	1
1,2-Dichloropropane	78-87-5	<0.170	5.00	0.170	ug/L	08.29.18 11.35	E8	1
1,3,5-Trimethylbenzene	108-67-8	<0.178	5.00	0.178	ug/L	08.29.18 11.35	E8	1
1,3-Dichlorobenzene	541-73-1	<0.169	5.00	0.169	ug/L	08.29.18 11.35	E8	1
1,3-Dichloropropane	142-28-9	<0.199	5.00	0.199	ug/L	08.29.18 11.35	E8	1
1,4-Dichlorobenzene	106-46-7	<0.222	5.00	0.222	ug/L	08.29.18 11.35	E8	1
2,2-Dichloropropane	594-20-7	<0.154	5.00	0.154	ug/L	08.29.18 11.35	E8	1
2-Butanone	78-93-3	<1.32	50.0	1.32	ug/L	08.29.18 11.35	E8	1
2-Chlorotoluene	95-49-8	<0.293	5.00	0.293	ug/L	08.29.18 11.35	E8	1
2-Hexanone	591-78-6	<1.05	50.0	1.05	ug/L	08.29.18 11.35	E8	1
4-Chlorotoluene	106-43-4	<0.114	5.00	0.114	ug/L	08.29.18 11.35	E8	1
4-Methyl-2-Pentanone	108-10-1	<0.874	50.0	0.874	ug/L	08.29.18 11.35	E8	1
Acetone	67-64-1	<20.0	100	20.0	ug/L	08.29.18 11.35	E8	1
Benzene	71-43-2	<0.185	5.00	0.185	ug/L	08.29.18 11.35	E8	1
Bromobenzene	108-86-1	<0.258	5.00	0.258	ug/L	08.29.18 11.35	E8	1
Bromochloromethane	74-97-5	<0.328	5.00	0.328	ug/L	08.29.18 11.35	E8	1
Bromodichloromethane	75-27-4	<0.164	5.00	0.164	ug/L	08.29.18 11.35	E8	1
Bromoform	75-25-2	<0.348	5.00	0.348	ug/L	08.29.18 11.35	E8	1
Bromomethane	74-83-9	<0.127	5.00	0.127	ug/L	08.29.18 11.35	E8	1
Carbon Disulfide	75-15-0	<0.173	5.00	0.173	ug/L	08.29.18 11.35	E8	1
Carbon Tetrachloride	56-23-5	<0.243	5.00	0.243	ug/L	08.29.18 11.35	E8	1
Chlorobenzene	108-90-7	<0.110	5.00	0.110	ug/L	08.29.18 11.35	E8	1
Chloroethane	75-00-3	<0.190	10.0	0.190	ug/L	08.29.18 11.35	E8	1
Chloroform	67-66-3	<0.107	5.00	0.107	ug/L	08.29.18 11.35	E8	1

Certificate of Analytical Results 595904

AMEC Foster Wheeler, Phoenix, AZ

Cave Creek Landfill

Sample Id: **TSSV-02-733-081518**
Lab Sample Id: 595904-001

Matrix: Water
Date Collected: 08.15.18 13.30

Date Received:08.15.18 17.25

Analytical Method: VOCs by SW 8260B
Tech: SAD
Analyst: SAD
Seq Number: 3061633

Date Prep: 08.29.18 10.30

Prep Method: SW5030C
% Solids:

SUB: AZ0765

Parameter	Cas Number	Result	RL	MDL	Units	Analysis Date	Flag	Dil
Chloromethane	74-87-3	<5.00	10.0	5.00	ug/L	08.29.18 11.35	E8	1
cis-1,2-Dichloroethene	156-59-2	<0.162	5.00	0.162	ug/L	08.29.18 11.35	E8	1
cis-1,3-Dichloropropene	10061-01-5	<0.126	5.00	0.126	ug/L	08.29.18 11.35	E8	1
Dibromochloromethane	124-48-1	<0.212	5.00	0.212	ug/L	08.29.18 11.35	E8	1
Dibromomethane	74-95-3	<0.186	5.00	0.186	ug/L	08.29.18 11.35	E8	1
Dichlorodifluoromethane	75-71-8	<0.148	5.00	0.148	ug/L	08.29.18 11.35	E8	1
Ethylbenzene	100-41-4	<0.190	5.00	0.190	ug/L	08.29.18 11.35	E8	1
Hexachlorobutadiene	87-68-3	<2.00	5.00	2.00	ug/L	08.29.18 11.35	E8	1
Iodomethane (Methyl Iodide)	74-88-4	<0.170	20.0	0.170	ug/L	08.29.18 11.35	E8	1
isopropylbenzene	98-82-8	<0.218	5.00	0.218	ug/L	08.29.18 11.35	E8	1
m,p-Xylenes	179601-23-1	<1.00	10.0	1.00	ug/L	08.29.18 11.35	E8	1
Methylene Chloride	75-09-2	<2.00	5.00	2.00	ug/L	08.29.18 11.35	E8	1
MTBE	1634-04-4	<0.500	5.00	0.500	ug/L	08.29.18 11.35	E8	1
Naphthalene	91-20-3	<2.00	10.0	2.00	ug/L	08.29.18 11.35	E8	1
n-Butylbenzene	104-51-8	<2.00	5.00	2.00	ug/L	08.29.18 11.35	E8	1
n-Propylbenzene	103-65-1	<0.173	5.00	0.173	ug/L	08.29.18 11.35	E8	1
o-Xylene	95-47-6	<0.500	5.00	0.500	ug/L	08.29.18 11.35	E8	1
p-Cymene (p-Isopropyltoluene)	99-87-6	<0.150	5.00	0.150	ug/L	08.29.18 11.35	E8	1
Sec-Butylbenzene	135-98-8	<0.124	5.00	0.124	ug/L	08.29.18 11.35	E8	1
Styrene	100-42-5	<0.197	5.00	0.197	ug/L	08.29.18 11.35	E8	1
tert-Butylbenzene	98-06-6	<0.177	5.00	0.177	ug/L	08.29.18 11.35	E8	1
Tetrachloroethylene	127-18-4	<0.347	5.00	0.347	ug/L	08.29.18 11.35	E8	1
Toluene	108-88-3	<0.500	5.00	0.500	ug/L	08.29.18 11.35	E8	1
Total Trihalomethane		<0.107	5.00	0.107	ug/L	08.29.18 11.35	E8	1
Total Xylenes	1330-20-7	<0.500	5.00	0.500	ug/L	08.29.18 11.35	E8	1
trans-1,2-dichloroethene	156-60-5	<0.167	5.00	0.167	ug/L	08.29.18 11.35	E8	1
Trichloroethene	79-01-6	<0.218	5.00	0.218	ug/L	08.29.18 11.35	E8	1
Trichlorofluoromethane	75-69-4	<0.191	5.00	0.191	ug/L	08.29.18 11.35	E8	1
Vinyl Acetate	108-05-4	<0.583	50.0	0.583	ug/L	08.29.18 11.35	E8	1
Vinyl Chloride	75-01-4	<0.232	2.00	0.232	ug/L	08.29.18 11.35	E8	1
trans-1,3-dichloropropene	10061-02-6	<0.198	5.00	0.198	ug/L	08.29.18 11.35	E8	1
1,1,2-Trichloro-1,2,2-Trifluoroethane	76-13-1	<0.175	10.0	0.175	ug/L	08.29.18 11.35	E8	1
1,3-Butadiene	106-99-0	<2.52	5.00	2.52	ug/L	08.29.18 11.35	E8	1
Cyclohexane *	110-82-7	<0.309	5.00	0.309	ug/L	08.29.18 11.35	E8	1
Dicyclopentadiene	77-73-6	<0.0540	5.00	0.0540	ug/L	08.29.18 11.35	E8	1
Methylcyclohexane	108-87-2	<0.228	10.0	0.228	ug/L	08.29.18 11.35	E8	1
n-Hexane	110-54-3	<5.00	10.0	5.00	ug/L	08.29.18 11.35	E8	1
4-Ethyltoluene	622-96-8	Not Present			ug/L	08.29.18 11.35	T4E8	1

Final 1.000

Certificate of Analytical Results 595904

AMEC Foster Wheeler, Phoenix, AZ

Cave Creek Landfill

Sample Id: **TSSV-02-733-081518**
Lab Sample Id: 595904-001

Matrix: Water
Date Collected: 08.15.18 13.30

Date Received:08.15.18 17.25

Analytical Method: VOCs by SW 8260B
Tech: SAD
Analyst: SAD
Seq Number: 3061633

Date Prep: 08.29.18 10.30

Prep Method: SW5030C
% Solids:

SUB: AZ0765

Parameter	Cas Number	Result	RL	MDL	Units	Analysis Date	Flag	Dil
Propene	115-07-1	Not Present			ug/L	08.29.18 11.35	T4E8	1

Surrogate	% Recovery	Units	Limits	Analysis Date	Flag
Dibromofluoromethane	95	%	75-131	08.29.18 11.35	
1,2-Dichloroethane-D4	96	%	63-144	08.29.18 11.35	
Toluene-D8	106	%	80-117	08.29.18 11.35	
4-Bromofluorobenzene	99	%	74-124	08.29.18 11.35	

Certificate of Analytical Results 595904

AMEC Foster Wheeler, Phoenix, AZ

Cave Creek Landfill

Sample Id: **TSSV-03-760-081518** Matrix: Water Date Received:08.15.18 17.25
Lab Sample Id: 595904-002 Date Collected: 08.15.18 11.10

Analytical Method: VOCs by SW 8260B Prep Method: SW5030C
Tech: SAD % Solids:
Analyst: SAD Date Prep: 08.29.18 10.44
Seq Number: 3061633 SUB: AZ0765

Dilution Analysis:
Seq#: 3061633 Date Analyzed: 08/29/18 13:54 Date Prep: 08/29/18 10:42

Parameter	Cas Number	Result	RL	MDL	Units	Analysis Date	Flag	Dil
1,1,1,2-Tetrachloroethane	630-20-6	<0.195	5.00	0.195	ug/L	08.29.18 14.19	E8	1
1,1,1-Trichloroethane	71-55-6	<0.130	5.00	0.130	ug/L	08.29.18 14.19	E8	1
1,1,2,2-Tetrachloroethane	79-34-5	<0.365	5.00	0.365	ug/L	08.29.18 14.19	E8	1
1,1,2-Trichloroethane	79-00-5	<0.272	5.00	0.272	ug/L	08.29.18 14.19	E8	1
1,1-Dichloroethane	75-34-3	<0.182	5.00	0.182	ug/L	08.29.18 14.19	E8	1
1,1-Dichloroethene	75-35-4	<0.178	5.00	0.178	ug/L	08.29.18 14.19	E8	1
1,1-Dichloropropene	563-58-6	<0.257	5.00	0.257	ug/L	08.29.18 14.19	E8	1
1,2,3-Trichlorobenzene	87-61-6	<2.00	5.00	2.00	ug/L	08.29.18 14.19	E8	1
1,2,3-Trichloropropane	96-18-4	<0.214	5.00	0.214	ug/L	08.29.18 14.19	E8	1
1,2,4-Trichlorobenzene	120-82-1	<2.00	5.00	2.00	ug/L	08.29.18 14.19	E8	1
1,2,4-Trimethylbenzene	95-63-6	<0.113	5.00	0.113	ug/L	08.29.18 14.19	E8	1
1,2-Dibromo-3-Chloropropane	96-12-8	<0.707	5.00	0.707	ug/L	08.29.18 14.19	E8	1
1,2-Dibromoethane	106-93-4	<0.380	5.00	0.380	ug/L	08.29.18 14.19	E8	1
1,2-Dichlorobenzene	95-50-1	<0.175	5.00	0.175	ug/L	08.29.18 14.19	E8	1
1,2-Dichloroethane	107-06-2	<0.283	5.00	0.283	ug/L	08.29.18 14.19	E8	1
1,2-Dichloropropane	78-87-5	<0.170	5.00	0.170	ug/L	08.29.18 14.19	E8	1
1,3,5-Trimethylbenzene	108-67-8	<0.178	5.00	0.178	ug/L	08.29.18 14.19	E8	1
1,3-Dichlorobenzene	541-73-1	<0.169	5.00	0.169	ug/L	08.29.18 14.19	E8	1
1,3-Dichloropropane	142-28-9	<0.199	5.00	0.199	ug/L	08.29.18 14.19	E8	1
1,4-Dichlorobenzene	106-46-7	<0.222	5.00	0.222	ug/L	08.29.18 14.19	E8	1
2,2-Dichloropropane	594-20-7	<0.154	5.00	0.154	ug/L	08.29.18 14.19	E8	1
2-Butanone	78-93-3	<1.32	50.0	1.32	ug/L	08.29.18 14.19	E8	1
2-Chlorotoluene	95-49-8	<0.293	5.00	0.293	ug/L	08.29.18 14.19	E8	1
2-Hexanone	591-78-6	<1.05	50.0	1.05	ug/L	08.29.18 14.19	E8	1
4-Chlorotoluene	106-43-4	<0.114	5.00	0.114	ug/L	08.29.18 14.19	E8	1
4-Methyl-2-Pentanone	108-10-1	<0.874	50.0	0.874	ug/L	08.29.18 14.19	E8	1
Acetone	67-64-1	<20.0	100	20.0	ug/L	08.29.18 14.19	E8	1
Benzene	71-43-2	<0.185	5.00	0.185	ug/L	08.29.18 14.19	E8	1
Bromobenzene	108-86-1	<0.258	5.00	0.258	ug/L	08.29.18 14.19	E8	1
Bromochloromethane	74-97-5	<0.328	5.00	0.328	ug/L	08.29.18 14.19	E8	1
Bromodichloromethane	75-27-4	<0.164	5.00	0.164	ug/L	08.29.18 14.19	E8	1
Bromoform	75-25-2	<0.348	5.00	0.348	ug/L	08.29.18 14.19	E8	1
Bromomethane	74-83-9	<0.127	5.00	0.127	ug/L	08.29.18 14.19	E8	1
Carbon Disulfide	75-15-0	<0.173	5.00	0.173	ug/L	08.29.18 14.19	E8	1
Carbon Tetrachloride	56-23-5	<0.243	5.00	0.243	ug/L	08.29.18 14.19	E8	1

Certificate of Analytical Results 595904

AMEC Foster Wheeler, Phoenix, AZ

Cave Creek Landfill

Sample Id: **TSSV-03-760-081518** Matrix: Water Date Received:08.15.18 17.25
Lab Sample Id: 595904-002 Date Collected: 08.15.18 11.10

Analytical Method: VOCs by SW 8260B Prep Method: SW5030C
Tech: SAD % Solids:
Analyst: SAD Date Prep: 08.29.18 10.44
Seq Number: 3061633 SUB: AZ0765

Dilution Analysis:
Seq#: 3061633 Date Analyzed: 08/29/18 13:54 Date Prep: 08/29/18 10:42

Parameter	Cas Number	Result	RL	MDL	Units	Analysis Date	Flag	Dil
Chlorobenzene	108-90-7	<0.110	5.00	0.110	ug/L	08.29.18 14.19	E8	1
Chloroethane	75-00-3	<0.190	10.0	0.190	ug/L	08.29.18 14.19	E8	1
Chloroform	67-66-3	**0.580**	5.00	0.107	ug/L	08.29.18 14.19	E4	1
Chloromethane	74-87-3	**0.730**	10.0	5.00	ug/L	08.29.18 14.19	E4	1
cis-1,2-Dichloroethene	156-59-2	**12.0**	5.00	0.162	ug/L	08.29.18 14.19		1
cis-1,3-Dichloropropene	10061-01-5	<0.126	5.00	0.126	ug/L	08.29.18 14.19	E8	1
Dibromochloromethane	124-48-1	<0.212	5.00	0.212	ug/L	08.29.18 14.19	E8	1
Dibromomethane	74-95-3	<0.186	5.00	0.186	ug/L	08.29.18 14.19	E8	1
Dichlorodifluoromethane	75-71-8	<0.148	5.00	0.148	ug/L	08.29.18 14.19	E8	1
Ethylbenzene	100-41-4	<0.190	5.00	0.190	ug/L	08.29.18 14.19	E8	1
Hexachlorobutadiene	87-68-3	<2.00	5.00	2.00	ug/L	08.29.18 14.19	E8	1
Iodomethane (Methyl Iodide)	74-88-4	<0.170	20.0	0.170	ug/L	08.29.18 14.19	E8	1
isopropylbenzene	98-82-8	<0.218	5.00	0.218	ug/L	08.29.18 14.19	E8	1
m,p-Xylenes	179601-23-1	<1.00	10.0	1.00	ug/L	08.29.18 14.19	E8	1
Methylene Chloride	75-09-2	<2.00	5.00	2.00	ug/L	08.29.18 14.19	E8	1
MTBE	1634-04-4	<0.500	5.00	0.500	ug/L	08.29.18 14.19	E8	1
Naphthalene	91-20-3	<2.00	10.0	2.00	ug/L	08.29.18 14.19	E8	1
n-Butylbenzene	104-51-8	<2.00	5.00	2.00	ug/L	08.29.18 14.19	E8	1
n-Propylbenzene	103-65-1	<0.173	5.00	0.173	ug/L	08.29.18 14.19	E8	1
o-Xylene	95-47-6	<0.500	5.00	0.500	ug/L	08.29.18 14.19	E8	1
p-Cymene (p-Isopropyltoluene)	99-87-6	<0.150	5.00	0.150	ug/L	08.29.18 14.19	E8	1
Sec-Butylbenzene	135-98-8	<0.124	5.00	0.124	ug/L	08.29.18 14.19	E8	1
Styrene	100-42-5	<0.197	5.00	0.197	ug/L	08.29.18 14.19	E8	1
tert-Butylbenzene	98-06-6	<0.177	5.00	0.177	ug/L	08.29.18 14.19	E8	1
Tetrachloroethylene	127-18-4	**5.71**	5.00	0.347	ug/L	08.29.18 14.19		1
Toluene	108-88-3	<0.500	5.00	0.500	ug/L	08.29.18 14.19	E8	1
Total Trihalomethane		**0.580**	5.00	0.107	ug/L	08.29.18 14.19	E4	1
Total Xylenes	1330-20-7	<0.500	5.00	0.500	ug/L	08.29.18 14.19	E8	1
trans-1,2-dichloroethene	156-60-5	<0.167	5.00	0.167	ug/L	08.29.18 14.19	E8	1
Trichloroethene	79-01-6	**305**	25.0	1.09	ug/L	08.29.18 13.54	D2	5
Trichlorofluoromethane	75-69-4	<0.191	5.00	0.191	ug/L	08.29.18 14.19	E8	1
Vinyl Acetate	108-05-4	<0.583	50.0	0.583	ug/L	08.29.18 14.19	E8	1
Vinyl Chloride	75-01-4	<0.232	2.00	0.232	ug/L	08.29.18 14.19	E8	1
trans-1,3-dichloropropene	10061-02-6	<0.198	5.00	0.198	ug/L	08.29.18 14.19	E8	1
1,1,2-Trichloro-1,2,2-Trifluoroethane	76-13-1	<0.175	10.0	0.175	ug/L	08.29.18 14.19	E8	1

Certificate of Analytical Results 595904

AMEC Foster Wheeler, Phoenix, AZ

Cave Creek Landfill

Sample Id: **TSSV-03-760-081518** Matrix: Water Date Received:08.15.18 17.25
Lab Sample Id: 595904-002 Date Collected: 08.15.18 11.10

Analytical Method: VOCs by SW 8260B Prep Method: SW5030C
Tech: SAD % Solids:
Analyst: SAD Date Prep: 08.29.18 10.44
Seq Number: 3061633 SUB: AZ0765

Dilution Analysis:
Seq#: 3061633 Date Analyzed: 08/29/18 13:54 Date Prep: 08/29/18 10:42

Parameter	Cas Number	Result	RL	MDL	Units	Analysis Date	Flag	Dil
1,3-Butadiene	106-99-0	<2.52	5.00	2.52	ug/L	08.29.18 14.19	E8	1
Cyclohexane *	110-82-7	<0.309	5.00	0.309	ug/L	08.29.18 14.19	E8	1
Dicyclopentadiene	77-73-6	<0.0540	5.00	0.0540	ug/L	08.29.18 14.19	E8	1
Methylcyclohexane	108-87-2	<0.228	10.0	0.228	ug/L	08.29.18 14.19	E8	1
n-Hexane	110-54-3	<5.00	10.0	5.00	ug/L	08.29.18 14.19	E8	1
4-Ethyltoluene	622-96-8	Not Present			ug/L	08.29.18 14.19	T4E8	1
Propene	115-07-1	Not Present			ug/L	08.29.18 14.19	T4E8	1

Surrogate	% Recovery	Units	Limits	Analysis Date	Flag
Dibromofluoromethane	97	%	75-131	08.29.18 14.19	
1,2-Dichloroethane-D4	93	%	63-144	08.29.18 14.19	
Toluene-D8	101	%	80-117	08.29.18 14.19	
4-Bromofluorobenzene	101	%	74-124	08.29.18 14.19	

Certificate of Analytical Results 595904

AMEC Foster Wheeler, Phoenix, AZ

Cave Creek Landfill

Sample Id: **TSSV-04-760-081518** Matrix: Water Date Received:08.15.18 17.25
Lab Sample Id: 595904-003 Date Collected: 08.15.18 13.00

Analytical Method: VOCs by SW 8260B Prep Method: SW5030C
Tech: SAD % Solids:
Analyst: SAD Date Prep: 08.29.18 10.32
Seq Number: 3061633 SUB: AZ0765

Parameter	Cas Number	Result	RL	MDL	Units	Analysis Date	Flag	Dil
1,1,1,2-Tetrachloroethane	630-20-6	<0.195	5.00	0.195	ug/L	08.29.18 11.59	E8	1
1,1,1-Trichloroethane	71-55-6	<0.130	5.00	0.130	ug/L	08.29.18 11.59	E8	1
1,1,2,2-Tetrachloroethane	79-34-5	<0.365	5.00	0.365	ug/L	08.29.18 11.59	E8	1
1,1,2-Trichloroethane	79-00-5	<0.272	5.00	0.272	ug/L	08.29.18 11.59	E8	1
1,1-Dichloroethane	75-34-3	<0.182	5.00	0.182	ug/L	08.29.18 11.59	E8	1
1,1-Dichloroethene	75-35-4	<0.178	5.00	0.178	ug/L	08.29.18 11.59	E8	1
1,1-Dichloropropene	563-58-6	<0.257	5.00	0.257	ug/L	08.29.18 11.59	E8	1
1,2,3-Trichlorobenzene	87-61-6	<2.00	5.00	2.00	ug/L	08.29.18 11.59	E8	1
1,2,3-Trichloropropane	96-18-4	<0.214	5.00	0.214	ug/L	08.29.18 11.59	E8	1
1,2,4-Trichlorobenzene	120-82-1	<2.00	5.00	2.00	ug/L	08.29.18 11.59	E8	1
1,2,4-Trimethylbenzene	95-63-6	<0.113	5.00	0.113	ug/L	08.29.18 11.59	E8	1
1,2-Dibromo-3-Chloropropane	96-12-8	<0.707	5.00	0.707	ug/L	08.29.18 11.59	E8	1
1,2-Dibromoethane	106-93-4	<0.380	5.00	0.380	ug/L	08.29.18 11.59	E8	1
1,2-Dichlorobenzene	95-50-1	<0.175	5.00	0.175	ug/L	08.29.18 11.59	E8	1
1,2-Dichloroethane	107-06-2	<0.283	5.00	0.283	ug/L	08.29.18 11.59	E8	1
1,2-Dichloropropane	78-87-5	<0.170	5.00	0.170	ug/L	08.29.18 11.59	E8	1
1,3,5-Trimethylbenzene	108-67-8	<0.178	5.00	0.178	ug/L	08.29.18 11.59	E8	1
1,3-Dichlorobenzene	541-73-1	<0.169	5.00	0.169	ug/L	08.29.18 11.59	E8	1
1,3-Dichloropropane	142-28-9	<0.199	5.00	0.199	ug/L	08.29.18 11.59	E8	1
1,4-Dichlorobenzene	106-46-7	<0.222	5.00	0.222	ug/L	08.29.18 11.59	E8	1
2,2-Dichloropropane	594-20-7	<0.154	5.00	0.154	ug/L	08.29.18 11.59	E8	1
2-Butanone	78-93-3	<1.32	50.0	1.32	ug/L	08.29.18 11.59	E8	1
2-Chlorotoluene	95-49-8	<0.293	5.00	0.293	ug/L	08.29.18 11.59	E8	1
2-Hexanone	591-78-6	<1.05	50.0	1.05	ug/L	08.29.18 11.59	E8	1
4-Chlorotoluene	106-43-4	<0.114	5.00	0.114	ug/L	08.29.18 11.59	E8	1
4-Methyl-2-Pentanone	108-10-1	<0.874	50.0	0.874	ug/L	08.29.18 11.59	E8	1
Acetone	67-64-1	<20.0	100	20.0	ug/L	08.29.18 11.59	E8	1
Benzene	71-43-2	<0.185	5.00	0.185	ug/L	08.29.18 11.59	E8	1
Bromobenzene	108-86-1	<0.258	5.00	0.258	ug/L	08.29.18 11.59	E8	1
Bromochloromethane	74-97-5	<0.328	5.00	0.328	ug/L	08.29.18 11.59	E8	1
Bromodichloromethane	75-27-4	<0.164	5.00	0.164	ug/L	08.29.18 11.59	E8	1
Bromoform	75-25-2	<0.348	5.00	0.348	ug/L	08.29.18 11.59	E8	1
Bromomethane	74-83-9	<0.127	5.00	0.127	ug/L	08.29.18 11.59	E8	1
Carbon Disulfide	75-15-0	<0.173	5.00	0.173	ug/L	08.29.18 11.59	E8	1
Carbon Tetrachloride	56-23-5	<0.243	5.00	0.243	ug/L	08.29.18 11.59	E8	1
Chlorobenzene	108-90-7	<0.110	5.00	0.110	ug/L	08.29.18 11.59	E8	1
Chloroethane	75-00-3	<0.190	10.0	0.190	ug/L	08.29.18 11.59	E8	1
Chloroform	67-66-3	**0.350**	5.00	0.107	ug/L	08.29.18 11.59	E4	1

Certificate of Analytical Results 595904

AMEC Foster Wheeler, Phoenix, AZ

Cave Creek Landfill

Sample Id: **TSSV-04-760-081518** Matrix: Water Date Received:08.15.18 17.25
Lab Sample Id: 595904-003 Date Collected: 08.15.18 13.00

Analytical Method: VOCs by SW 8260B Prep Method: SW5030C
Tech: SAD % Solids:
Analyst: SAD Date Prep: 08.29.18 10.32
Seq Number: 3061633 SUB: AZ0765

Parameter	Cas Number	Result	RL	MDL	Units	Analysis Date	Flag	Dil
Chloromethane	74-87-3	<5.00	10.0	5.00	ug/L	08.29.18 11.59	E8	1
cis-1,2-Dichloroethene	156-59-2	<0.162	5.00	0.162	ug/L	08.29.18 11.59	E8	1
cis-1,3-Dichloropropene	10061-01-5	<0.126	5.00	0.126	ug/L	08.29.18 11.59	E8	1
Dibromochloromethane	124-48-1	<0.212	5.00	0.212	ug/L	08.29.18 11.59	E8	1
Dibromomethane	74-95-3	<0.186	5.00	0.186	ug/L	08.29.18 11.59	E8	1
Dichlorodifluoromethane	75-71-8	<0.148	5.00	0.148	ug/L	08.29.18 11.59	E8	1
Ethylbenzene	100-41-4	<0.190	5.00	0.190	ug/L	08.29.18 11.59	E8	1
Hexachlorobutadiene	87-68-3	<2.00	5.00	2.00	ug/L	08.29.18 11.59	E8	1
Iodomethane (Methyl Iodide)	74-88-4	<0.170	20.0	0.170	ug/L	08.29.18 11.59	E8	1
isopropylbenzene	98-82-8	<0.218	5.00	0.218	ug/L	08.29.18 11.59	E8	1
m,p-Xylenes	179601-23-1	<1.00	10.0	1.00	ug/L	08.29.18 11.59	E8	1
Methylene Chloride	75-09-2	<2.00	5.00	2.00	ug/L	08.29.18 11.59	E8	1
MTBE	1634-04-4	<0.500	5.00	0.500	ug/L	08.29.18 11.59	E8	1
Naphthalene	91-20-3	<2.00	10.0	2.00	ug/L	08.29.18 11.59	E8	1
n-Butylbenzene	104-51-8	<2.00	5.00	2.00	ug/L	08.29.18 11.59	E8	1
n-Propylbenzene	103-65-1	<0.173	5.00	0.173	ug/L	08.29.18 11.59	E8	1
o-Xylene	95-47-6	<0.500	5.00	0.500	ug/L	08.29.18 11.59	E8	1
p-Cymene (p-Isopropyltoluene)	99-87-6	<0.150	5.00	0.150	ug/L	08.29.18 11.59	E8	1
Sec-Butylbenzene	135-98-8	<0.124	5.00	0.124	ug/L	08.29.18 11.59	E8	1
Styrene	100-42-5	<0.197	5.00	0.197	ug/L	08.29.18 11.59	E8	1
tert-Butylbenzene	98-06-6	<0.177	5.00	0.177	ug/L	08.29.18 11.59	E8	1
Tetrachloroethylene	127-18-4	<0.347	5.00	0.347	ug/L	08.29.18 11.59	E8	1
Toluene	108-88-3	<0.500	5.00	0.500	ug/L	08.29.18 11.59	E8	1
Total Trihalomethane		**0.350**	5.00	0.107	ug/L	08.29.18 11.59	E4	1
Total Xylenes	1330-20-7	<0.500	5.00	0.500	ug/L	08.29.18 11.59	E8	1
trans-1,2-dichloroethene	156-60-5	<0.167	5.00	0.167	ug/L	08.29.18 11.59	E8	1
Trichloroethene	79-01-6	**61.7**	5.00	0.218	ug/L	08.29.18 11.59		1
Trichlorofluoromethane	75-69-4	<0.191	5.00	0.191	ug/L	08.29.18 11.59	E8	1
Vinyl Acetate	108-05-4	<0.583	50.0	0.583	ug/L	08.29.18 11.59	E8	1
Vinyl Chloride	75-01-4	<0.232	2.00	0.232	ug/L	08.29.18 11.59	E8	1
trans-1,3-dichloropropene	10061-02-6	<0.198	5.00	0.198	ug/L	08.29.18 11.59	E8	1
1,1,2-Trichloro-1,2,2-Trifluoroetha	76-13-1	**0.960**	10.0	0.175	ug/L	08.29.18 11.59	E4	1
1,3-Butadiene	106-99-0	<2.52	5.00	2.52	ug/L	08.29.18 11.59	E8	1
Cyclohexane *	110-82-7	<0.309	5.00	0.309	ug/L	08.29.18 11.59	E8	1
Dicyclopentadiene	77-73-6	<0.0540	5.00	0.0540	ug/L	08.29.18 11.59	E8	1
Methylcyclohexane	108-87-2	<0.228	10.0	0.228	ug/L	08.29.18 11.59	E8	1
n-Hexane	110-54-3	<5.00	10.0	5.00	ug/L	08.29.18 11.59	E8	1
4-Ethyltoluene	622-96-8	Not Present			ug/L	08.29.18 11.59	T4E8	1

Certificate of Analytical Results 595904

AMEC Foster Wheeler, Phoenix, AZ

Cave Creek Landfill

Sample Id: **TSSV-04-760-081518**
Lab Sample Id: 595904-003

Matrix: Water
Date Collected: 08.15.18 13.00

Date Received: 08.15.18 17.25

Analytical Method: VOCs by SW 8260B
Tech: SAD
Analyst: SAD
Seq Number: 3061633

Date Prep: 08.29.18 10.32

Prep Method: SW5030C
% Solids:

SUB: AZ0765

Parameter	Cas Number	Result	RL	MDL	Units	Analysis Date	Flag	Dil
Propene	115-07-1	Not Present			ug/L	08.29.18 11.59	T4E8	1

Surrogate	% Recovery	Units	Limits	Analysis Date	Flag
Dibromofluoromethane	96	%	75-131	08.29.18 11.59	
1,2-Dichloroethane-D4	102	%	63-144	08.29.18 11.59	
Toluene-D8	104	%	80-117	08.29.18 11.59	
4-Bromofluorobenzene	101	%	74-124	08.29.18 11.59	

Certificate of Analytical Results 595904

AMEC Foster Wheeler, Phoenix, AZ

Cave Creek Landfill

Sample Id: **TSSV-05-760-081518** Matrix: Water Date Received:08.15.18 17.25
Lab Sample Id: 595904-004 Date Collected: 08.15.18 12.10

Analytical Method: VOCs by SW 8260B Prep Method: SW5030C
Tech: SAD % Solids:
Analyst: SAD Date Prep: 08.29.18 10.34
Seq Number: 3061633 SUB: AZ0765

Parameter	Cas Number	Result	RL	MDL	Units	Analysis Date	Flag	Dil
1,1,1,2-Tetrachloroethane	630-20-6	<0.195	5.00	0.195	ug/L	08.29.18 12.22	E8	1
1,1,1-Trichloroethane	71-55-6	<0.130	5.00	0.130	ug/L	08.29.18 12.22	E8	1
1,1,2,2-Tetrachloroethane	79-34-5	<0.365	5.00	0.365	ug/L	08.29.18 12.22	E8	1
1,1,2-Trichloroethane	79-00-5	<0.272	5.00	0.272	ug/L	08.29.18 12.22	E8	1
1,1-Dichloroethane	75-34-3	<0.182	5.00	0.182	ug/L	08.29.18 12.22	E8	1
1,1-Dichloroethene	75-35-4	<0.178	5.00	0.178	ug/L	08.29.18 12.22	E8	1
1,1-Dichloropropene	563-58-6	<0.257	5.00	0.257	ug/L	08.29.18 12.22	E8	1
1,2,3-Trichlorobenzene	87-61-6	<2.00	5.00	2.00	ug/L	08.29.18 12.22	E8	1
1,2,3-Trichloropropane	96-18-4	<0.214	5.00	0.214	ug/L	08.29.18 12.22	E8	1
1,2,4-Trichlorobenzene	120-82-1	<2.00	5.00	2.00	ug/L	08.29.18 12.22	E8	1
1,2,4-Trimethylbenzene	95-63-6	<0.113	5.00	0.113	ug/L	08.29.18 12.22	E8	1
1,2-Dibromo-3-Chloropropane	96-12-8	<0.707	5.00	0.707	ug/L	08.29.18 12.22	E8	1
1,2-Dibromoethane	106-93-4	<0.380	5.00	0.380	ug/L	08.29.18 12.22	E8	1
1,2-Dichlorobenzene	95-50-1	<0.175	5.00	0.175	ug/L	08.29.18 12.22	E8	1
1,2-Dichloroethane	107-06-2	<0.283	5.00	0.283	ug/L	08.29.18 12.22	E8	1
1,2-Dichloropropane	78-87-5	<0.170	5.00	0.170	ug/L	08.29.18 12.22	E8	1
1,3,5-Trimethylbenzene	108-67-8	<0.178	5.00	0.178	ug/L	08.29.18 12.22	E8	1
1,3-Dichlorobenzene	541-73-1	<0.169	5.00	0.169	ug/L	08.29.18 12.22	E8	1
1,3-Dichloropropane	142-28-9	<0.199	5.00	0.199	ug/L	08.29.18 12.22	E8	1
1,4-Dichlorobenzene	106-46-7	<0.222	5.00	0.222	ug/L	08.29.18 12.22	E8	1
2,2-Dichloropropane	594-20-7	<0.154	5.00	0.154	ug/L	08.29.18 12.22	E8	1
2-Butanone	78-93-3	<1.32	50.0	1.32	ug/L	08.29.18 12.22	E8	1
2-Chlorotoluene	95-49-8	<0.293	5.00	0.293	ug/L	08.29.18 12.22	E8	1
2-Hexanone	591-78-6	<1.05	50.0	1.05	ug/L	08.29.18 12.22	E8	1
4-Chlorotoluene	106-43-4	<0.114	5.00	0.114	ug/L	08.29.18 12.22	E8	1
4-Methyl-2-Pentanone	108-10-1	<0.874	50.0	0.874	ug/L	08.29.18 12.22	E8	1
Acetone	67-64-1	<20.0	100	20.0	ug/L	08.29.18 12.22	E8	1
Benzene	71-43-2	<0.185	5.00	0.185	ug/L	08.29.18 12.22	E8	1
Bromobenzene	108-86-1	<0.258	5.00	0.258	ug/L	08.29.18 12.22	E8	1
Bromochloromethane	74-97-5	<0.328	5.00	0.328	ug/L	08.29.18 12.22	E8	1
Bromodichloromethane	75-27-4	<0.164	5.00	0.164	ug/L	08.29.18 12.22	E8	1
Bromoform	75-25-2	<0.348	5.00	0.348	ug/L	08.29.18 12.22	E8	1
Bromomethane	74-83-9	<0.127	5.00	0.127	ug/L	08.29.18 12.22	E8	1
Carbon Disulfide	75-15-0	<0.173	5.00	0.173	ug/L	08.29.18 12.22	E8	1
Carbon Tetrachloride	56-23-5	<0.243	5.00	0.243	ug/L	08.29.18 12.22	E8	1
Chlorobenzene	108-90-7	<0.110	5.00	0.110	ug/L	08.29.18 12.22	E8	1
Chloroethane	75-00-3	<0.190	10.0	0.190	ug/L	08.29.18 12.22	E8	1
Chloroform	67-66-3	<0.107	5.00	0.107	ug/L	08.29.18 12.22	E8	1

Certificate of Analytical Results 595904

AMEC Foster Wheeler, Phoenix, AZ

Cave Creek Landfill

Sample Id: **TSSV-05-760-081518** Matrix: Water Date Received:08.15.18 17.25
Lab Sample Id: 595904-004 Date Collected: 08.15.18 12.10

Analytical Method: VOCs by SW 8260B Prep Method: SW5030C
Tech: SAD % Solids:
Analyst: SAD Date Prep: 08.29.18 10.34
Seq Number: 3061633 SUB: AZ0765

Parameter	Cas Number	Result	RL	MDL	Units	Analysis Date	Flag	Dil
Chloromethane	74-87-3	<5.00	10.0	5.00	ug/L	08.29.18 12.22	E8	1
cis-1,2-Dichloroethene	156-59-2	**0.780**	5.00	0.162	ug/L	08.29.18 12.22	E4	1
cis-1,3-Dichloropropene	10061-01-5	<0.126	5.00	0.126	ug/L	08.29.18 12.22	E8	1
Dibromochloromethane	124-48-1	<0.212	5.00	0.212	ug/L	08.29.18 12.22	E8	1
Dibromomethane	74-95-3	<0.186	5.00	0.186	ug/L	08.29.18 12.22	E8	1
Dichlorodifluoromethane	75-71-8	<0.148	5.00	0.148	ug/L	08.29.18 12.22	E8	1
Ethylbenzene	100-41-4	<0.190	5.00	0.190	ug/L	08.29.18 12.22	E8	1
Hexachlorobutadiene	87-68-3	<2.00	5.00	2.00	ug/L	08.29.18 12.22	E8	1
Iodomethane (Methyl Iodide)	74-88-4	<0.170	20.0	0.170	ug/L	08.29.18 12.22	E8	1
isopropylbenzene	98-82-8	<0.218	5.00	0.218	ug/L	08.29.18 12.22	E8	1
m,p-Xylenes	179601-23-1	<1.00	10.0	1.00	ug/L	08.29.18 12.22	E8	1
Methylene Chloride	75-09-2	<2.00	5.00	2.00	ug/L	08.29.18 12.22	E8	1
MTBE	1634-04-4	<0.500	5.00	0.500	ug/L	08.29.18 12.22	E8	1
Naphthalene	91-20-3	<2.00	10.0	2.00	ug/L	08.29.18 12.22	E8	1
n-Butylbenzene	104-51-8	<2.00	5.00	2.00	ug/L	08.29.18 12.22	E8	1
n-Propylbenzene	103-65-1	<0.173	5.00	0.173	ug/L	08.29.18 12.22	E8	1
o-Xylene	95-47-6	<0.500	5.00	0.500	ug/L	08.29.18 12.22	E8	1
p-Cymene (p-Isopropyltoluene)	99-87-6	<0.150	5.00	0.150	ug/L	08.29.18 12.22	E8	1
Sec-Butylbenzene	135-98-8	<0.124	5.00	0.124	ug/L	08.29.18 12.22	E8	1
Styrene	100-42-5	<0.197	5.00	0.197	ug/L	08.29.18 12.22	E8	1
tert-Butylbenzene	98-06-6	<0.177	5.00	0.177	ug/L	08.29.18 12.22	E8	1
Tetrachloroethylene	127-18-4	<0.347	5.00	0.347	ug/L	08.29.18 12.22	E8	1
Toluene	108-88-3	<0.500	5.00	0.500	ug/L	08.29.18 12.22	E8	1
Total Trihalomethane		<0.107	5.00	0.107	ug/L	08.29.18 12.22	E8	1
Total Xylenes	1330-20-7	<0.500	5.00	0.500	ug/L	08.29.18 12.22	E8	1
trans-1,2-dichloroethene	156-60-5	<0.167	5.00	0.167	ug/L	08.29.18 12.22	E8	1
Trichloroethene	79-01-6	<0.218	5.00	0.218	ug/L	08.29.18 12.22	E8	1
Trichlorofluoromethane	75-69-4	<0.191	5.00	0.191	ug/L	08.29.18 12.22	E8	1
Vinyl Acetate	108-05-4	<0.583	50.0	0.583	ug/L	08.29.18 12.22	E8	1
Vinyl Chloride	75-01-4	<0.232	2.00	0.232	ug/L	08.29.18 12.22	E8	1
trans-1,3-dichloropropene	10061-02-6	<0.198	5.00	0.198	ug/L	08.29.18 12.22	E8	1
1,1,2-Trichloro-1,2,2-Trifluoroethane	76-13-1	<0.175	10.0	0.175	ug/L	08.29.18 12.22	E8	1
1,3-Butadiene	106-99-0	<2.52	5.00	2.52	ug/L	08.29.18 12.22	E8	1
Cyclohexane *	110-82-7	<0.309	5.00	0.309	ug/L	08.29.18 12.22	E8	1
Dicyclopentadiene	77-73-6	<0.0540	5.00	0.0540	ug/L	08.29.18 12.22	E8	1
Methylcyclohexane	108-87-2	<0.228	10.0	0.228	ug/L	08.29.18 12.22	E8	1
n-Hexane	110-54-3	<5.00	10.0	5.00	ug/L	08.29.18 12.22	E8	1
4-Ethyltoluene	622-96-8	Not Present			ug/L	08.29.18 12.22	T4E8	1

Certificate of Analytical Results 595904

AMEC Foster Wheeler, Phoenix, AZ

Cave Creek Landfill

Sample Id: **TSSV-05-760-081518**
Lab Sample Id: 595904-004

Matrix: Water
Date Collected: 08.15.18 12.10

Date Received: 08.15.18 17.25

Analytical Method: VOCs by SW 8260B
Tech: SAD
Analyst: SAD
Seq Number: 3061633

Date Prep: 08.29.18 10.34

Prep Method: SW5030C
% Solids:

SUB: AZ0765

Parameter	Cas Number	Result	RL	MDL	Units	Analysis Date	Flag	Dil
Propene	115-07-1	Not Present			ug/L	08.29.18 12.22	T4E8	1

Surrogate	% Recovery	Units	Limits	Analysis Date	Flag
Dibromofluoromethane	97	%	75-131	08.29.18 12.22	
1,2-Dichloroethane-D4	98	%	63-144	08.29.18 12.22	
Toluene-D8	103	%	80-117	08.29.18 12.22	
4-Bromofluorobenzene	101	%	74-124	08.29.18 12.22	

Certificate of Analytical Results 595904

AMEC Foster Wheeler, Phoenix, AZ

Cave Creek Landfill

Sample Id: **TSSV-06-729-081418** Matrix: Water Date Received:08.15.18 17.25
Lab Sample Id: 595904-005 Date Collected: 08.14.18 08.10

Analytical Method: VOCs by SW 8260B Prep Method: SW5030C
Tech: MNI % Solids:
Analyst: MNI Date Prep: 08.27.18 10.50
Seq Number: 3061308

Parameter	Cas Number	Result	RL	MDL	Units	Analysis Date	Flag	Dil
1,1,1,2-Tetrachloroethane	630-20-6	<0.100	0.500	0.100	ug/L	08.27.18 21.35	E8	1
1,1,1-Trichloroethane	71-55-6	<0.200	0.500	0.200	ug/L	08.27.18 21.35	E8	1
1,1,2,2-Tetrachloroethane	79-34-5	<0.100	0.500	0.100	ug/L	08.27.18 21.35	E8	1
1,1,2-Trichloroethane	79-00-5	<0.0900	0.500	0.0900	ug/L	08.27.18 21.35	E8	1
1,1-Dichloroethane	75-34-3	<0.0700	0.500	0.0700	ug/L	08.27.18 21.35	E8	1
1,1-Dichloroethene	75-35-4	<0.200	0.500	0.200	ug/L	08.27.18 21.35	E8	1
1,1-Dichloropropene	563-58-6	<0.200	1.00	0.200	ug/L	08.27.18 21.35	E8	1
1,2,3-Trichlorobenzene	87-61-6	<0.200	5.00	0.200	ug/L	08.27.18 21.35	E8	1
1,2,3-Trichloropropane	96-18-4	<0.200	1.00	0.200	ug/L	08.27.18 21.35	E8	1
1,2,4-Trichlorobenzene	120-82-1	<0.0700	5.00	0.0700	ug/L	08.27.18 21.35	E8	1
1,2,4-Trimethylbenzene	95-63-6	<0.0700	2.00	0.0700	ug/L	08.27.18 21.35	E8	1
1,2-Dibromo-3-Chloropropane	96-12-8	<0.300	2.00	0.300	ug/L	08.27.18 21.35	E8	1
1,2-Dibromoethane	106-93-4	<0.200	0.500	0.200	ug/L	08.27.18 21.35	E8	1
1,2-Dichlorobenzene	95-50-1	<0.0800	1.50	0.0800	ug/L	08.27.18 21.35	E8	1
1,2-Dichloroethane	107-06-2	<0.100	0.500	0.100	ug/L	08.27.18 21.35	E8	1
1,2-Dichloropropane	78-87-5	<0.0900	0.500	0.0900	ug/L	08.27.18 21.35	E8	1
1,3,5-Trimethylbenzene	108-67-8	<0.0700	1.50	0.0700	ug/L	08.27.18 21.35	E8	1
1,3-Dichlorobenzene	541-73-1	<0.0600	1.50	0.0600	ug/L	08.27.18 21.35	E8	1
1,3-Dichloropropane	142-28-9	<0.0700	1.00	0.0700	ug/L	08.27.18 21.35	E8	1
1,4-Dichlorobenzene	106-46-7	<0.200	1.50	0.200	ug/L	08.27.18 21.35	E8	1
2,2-Dichloropropane	594-20-7	<0.200	0.500	0.200	ug/L	08.27.18 21.35	E8	1
2-Butanone	78-93-3	<0.300	5.00	0.300	ug/L	08.27.18 21.35	E8	1
2-Chlorotoluene	95-49-8	<0.0800	1.50	0.0800	ug/L	08.27.18 21.35	E8	1
2-Hexanone	591-78-6	<0.200	5.00	0.200	ug/L	08.27.18 21.35	E8L1	1
4-Chlorotoluene	106-43-4	<0.0700	2.00	0.0700	ug/L	08.27.18 21.35	E8	1
4-Methyl-2-Pentanone	108-10-1	<0.200	5.00	0.200	ug/L	08.27.18 21.35	E8L1	1
Acetone	67-64-1	**7.06**	20.0	0.600	ug/L	08.27.18 21.35	E4	1
Benzene	71-43-2	<0.100	0.500	0.100	ug/L	08.27.18 21.35	E8	1
Bromobenzene	108-86-1	<0.0900	1.50	0.0900	ug/L	08.27.18 21.35	E8	1
Bromochloromethane	74-97-5	<0.200	0.500	0.200	ug/L	08.27.18 21.35	E8	1
Bromodichloromethane	75-27-4	<0.0800	0.500	0.0800	ug/L	08.27.18 21.35	E8	1
Bromoform	75-25-2	<0.100	1.00	0.100	ug/L	08.27.18 21.35	E8	1
Bromomethane	74-83-9	<0.300	5.00	0.300	ug/L	08.27.18 21.35	E8	1
Carbon Disulfide	75-15-0	<0.0900	0.500	0.0900	ug/L	08.27.18 21.35	E8	1
Carbon Tetrachloride	56-23-5	<0.200	0.500	0.200	ug/L	08.27.18 21.35	E8	1
Chlorobenzene	108-90-7	<0.0700	0.500	0.0700	ug/L	08.27.18 21.35	E8	1
Chloroethane	75-00-3	<0.600	4.00	0.600	ug/L	08.27.18 21.35	E8	1
Chloroform	67-66-3	<0.0700	0.500	0.0700	ug/L	08.27.18 21.35	E8	1

Certificate of Analytical Results 595904

AMEC Foster Wheeler, Phoenix, AZ

Cave Creek Landfill

Sample Id: **TSSV-06-729-081418** Matrix: Water Date Received:08.15.18 17.25
Lab Sample Id: 595904-005 Date Collected: 08.14.18 08.10

Analytical Method: VOCs by SW 8260B Prep Method: SW5030C
Tech: MNI % Solids:
Analyst: MNI Date Prep: 08.27.18 10.50
Seq Number: 3061308

Parameter	Cas Number	Result	RL	MDL	Units	Analysis Date	Flag	Dil
Chloromethane	74-87-3	**1.34**	5.00	0.200	ug/L	08.27.18 21.35	E4	1
cis-1,2-Dichloroethene	156-59-2	<0.200	0.500	0.200	ug/L	08.27.18 21.35	E8	1
cis-1,3-Dichloropropene	10061-01-5	<0.0800	1.00	0.0800	ug/L	08.27.18 21.35	E8	1
Dibromochloromethane	124-48-1	<0.0700	0.500	0.0700	ug/L	08.27.18 21.35	E8	1
Dibromomethane	74-95-3	<0.200	0.500	0.200	ug/L	08.27.18 21.35	E8	1
Dichlorodifluoromethane	75-71-8	<0.200	2.00	0.200	ug/L	08.27.18 21.35	E8	1
Ethylbenzene	100-41-4	<0.0900	2.00	0.0900	ug/L	08.27.18 21.35	E8	1
Hexachlorobutadiene	87-68-3	<0.200	5.00	0.200	ug/L	08.27.18 21.35	E8	1
Iodomethane (Methyl Iodide)	74-88-4	<0.300	2.00	0.300	ug/L	08.27.18 21.35	E8	1
isopropylbenzene	98-82-8	<0.0800	2.50	0.0800	ug/L	08.27.18 21.35	E8	1
m,p-Xylenes	179601-23-1	<0.0900	2.00	0.0900	ug/L	08.27.18 21.35	E8	1
Methylene Chloride	75-09-2	<0.200	3.00	0.200	ug/L	08.27.18 21.35	E8	1
MTBE	1634-04-4	<0.100	2.00	0.100	ug/L	08.27.18 21.35	E8	1
Naphthalene	91-20-3	<0.200	5.00	0.200	ug/L	08.27.18 21.35	E8	1
n-Butylbenzene	104-51-8	<0.200	2.50	0.200	ug/L	08.27.18 21.35	E8	1
n-Propylbenzene	103-65-1	<0.0800	2.00	0.0800	ug/L	08.27.18 21.35	E8	1
o-Xylene	95-47-6	<0.0900	1.00	0.0900	ug/L	08.27.18 21.35	E8	1
p-Cymene (p-Isopropyltoluene)	99-87-6	<0.100	1.50	0.100	ug/L	08.27.18 21.35	E8	1
Sec-Butylbenzene	135-98-8	<0.100	1.50	0.100	ug/L	08.27.18 21.35	E8	1
Styrene	100-42-5	<0.0800	1.00	0.0800	ug/L	08.27.18 21.35	E8	1
tert-Butylbenzene	98-06-6	<0.200	2.50	0.200	ug/L	08.27.18 21.35	E8	1
Tetrachloroethylene	127-18-4	**1.57**	0.500	0.0800	ug/L	08.27.18 21.35		1
Toluene	108-88-3	<0.0700	2.00	0.0700	ug/L	08.27.18 21.35	E8	1
Total Trihalomethane		<0.0700	0.500	0.0700	ug/L	08.27.18 21.35	E8	1
Total Xylenes	1330-20-7	<0.0900	1.00	0.0900	ug/L	08.27.18 21.35	E8	1
trans-1,2-dichloroethene	156-60-5	<0.0900	0.500	0.0900	ug/L	08.27.18 21.35	E8	1
Trichloroethene	79-01-6	**7.02**	0.500	0.200	ug/L	08.27.18 21.35		1
Trichlorofluoromethane	75-69-4	<0.400	2.00	0.400	ug/L	08.27.18 21.35	E8	1
Vinyl Acetate	108-05-4	<0.200	5.00	0.200	ug/L	08.27.18 21.35	E8	1
Vinyl Chloride	75-01-4	<0.100	0.500	0.100	ug/L	08.27.18 21.35	E8	1
trans-1,3-dichloropropene	10061-02-6	<0.0600	0.500	0.0600	ug/L	08.27.18 21.35	E8	1
1,1,2-Trichloro-1,2,2-Trifluoroethane	76-13-1	<0.300	5.00	0.300	ug/L	08.27.18 21.35	E8	1
1,3-Butadiene	106-99-0	<0.276	5.00	0.276	ug/L	08.27.18 21.35	E8	1
Cyclohexane	110-82-7	<0.115	5.00	0.115	ug/L	08.27.18 21.35	E8	1
Dicyclopentadiene	77-73-6	<0.0540	5.00	0.0540	ug/L	08.27.18 21.35	E8	1
Methylcyclohexane	108-87-2	<0.117	5.00	0.117	ug/L	08.27.18 21.35	E8	1
n-Hexane	110-54-3	<0.0920	5.00	0.0920	ug/L	08.27.18 21.35	E8	1
4-Ethyltoluene	622-96-8	Not Present			ug/L	08.27.18 21.35	T4E8	1

Certificate of Analytical Results 595904

AMEC Foster Wheeler, Phoenix, AZ

Cave Creek Landfill

Sample Id: **TSSV-06-729-081418**
Lab Sample Id: 595904-005

Matrix: Water
Date Collected: 08.14.18 08.10

Date Received:08.15.18 17.25

Analytical Method: VOCs by SW 8260B
Tech: MNI
Analyst: MNI
Seq Number: 3061308

Date Prep: 08.27.18 10.50

Prep Method: SW5030C
% Solids:

Parameter	Cas Number	Result	RL	MDL	Units	Analysis Date	Flag	Dil
Propene	115-07-1	Not Present			ug/L	08.27.18 21.35	T4E8	1

Surrogate	% Recovery	Units	Limits	Analysis Date	Flag
4-Bromofluorobenzene	87	%	74-124	08.27.18 21.35	
Dibromofluoromethane	88	%	75-131	08.27.18 21.35	
1,2-Dichloroethane-D4	92	%	63-144	08.27.18 21.35	
Toluene-D8	49	%	80-117	08.27.18 21.35	S6

Certificate of Analytical Results 595904

AMEC Foster Wheeler, Phoenix, AZ

Cave Creek Landfill

Sample Id: **TSSV-07-742-081418** Matrix: Water Date Received:08.15.18 17.25
Lab Sample Id: 595904-006 Date Collected: 08.14.18 07.10

Analytical Method: VOCs by SW 8260B Prep Method: SW5030C
Tech: MNI % Solids:
Analyst: MNI Date Prep: 08.29.18 19.56
Seq Number: 3061683

Parameter	Cas Number	Result	RL	MDL	Units	Analysis Date	Flag	Dil
1,1,1,2-Tetrachloroethane	630-20-6	<0.100	0.500	0.100	ug/L	08.30.18 01.58	H1E8	1
1,1,1-Trichloroethane	71-55-6	<0.200	0.500	0.200	ug/L	08.30.18 01.58	H1E8	1
1,1,2,2-Tetrachloroethane	79-34-5	<0.100	0.500	0.100	ug/L	08.30.18 01.58	H1E8	1
1,1,2-Trichloroethane	79-00-5	<0.0900	0.500	0.0900	ug/L	08.30.18 01.58	H1E8	1
1,1-Dichloroethane	75-34-3	<0.0700	0.500	0.0700	ug/L	08.30.18 01.58	H1E8	1
1,1-Dichloroethene	75-35-4	<0.200	0.500	0.200	ug/L	08.30.18 01.58	H1E8	1
1,1-Dichloropropene	563-58-6	<0.200	1.00	0.200	ug/L	08.30.18 01.58	H1E8	1
1,2,3-Trichlorobenzene	87-61-6	<0.200	5.00	0.200	ug/L	08.30.18 01.58	H1E8	1
1,2,3-Trichloropropane	96-18-4	<0.200	1.00	0.200	ug/L	08.30.18 01.58	H1E8	1
1,2,4-Trichlorobenzene	120-82-1	<0.0700	5.00	0.0700	ug/L	08.30.18 01.58	H1E8	1
1,2,4-Trimethylbenzene	95-63-6	<0.0700	2.00	0.0700	ug/L	08.30.18 01.58	H1E8	1
1,2-Dibromo-3-Chloropropane	96-12-8	<0.300	2.00	0.300	ug/L	08.30.18 01.58	H1E8	1
1,2-Dibromoethane	106-93-4	<0.200	0.500	0.200	ug/L	08.30.18 01.58	H1E8	1
1,2-Dichlorobenzene	95-50-1	<0.0800	1.50	0.0800	ug/L	08.30.18 01.58	H1E8	1
1,2-Dichloroethane	107-06-2	<0.100	0.500	0.100	ug/L	08.30.18 01.58	H1E8	1
1,2-Dichloropropane	78-87-5	<0.0900	0.500	0.0900	ug/L	08.30.18 01.58	H1E8	1
1,3,5-Trimethylbenzene	108-67-8	<0.0700	1.50	0.0700	ug/L	08.30.18 01.58	H1E8	1
1,3-Dichlorobenzene	541-73-1	<0.0600	1.50	0.0600	ug/L	08.30.18 01.58	H1E8	1
1,3-Dichloropropane	142-28-9	<0.0700	1.00	0.0700	ug/L	08.30.18 01.58	H1E8	1
1,4-Dichlorobenzene	106-46-7	<0.200	1.50	0.200	ug/L	08.30.18 01.58	H1E8	1
2,2-Dichloropropane	594-20-7	<0.200	0.500	0.200	ug/L	08.30.18 01.58	H1E8	1
2-Butanone	78-93-3	<0.300	5.00	0.300	ug/L	08.30.18 01.58	H1L1E8	1
2-Chlorotoluene	95-49-8	<0.0800	1.50	0.0800	ug/L	08.30.18 01.58	H1E8	1
2-Hexanone	591-78-6	<0.200	5.00	0.200	ug/L	08.30.18 01.58	H1L1E8	1
4-Chlorotoluene	106-43-4	<0.0700	2.00	0.0700	ug/L	08.30.18 01.58	H1E8	1
4-Methyl-2-Pentanone	108-10-1	<0.200	5.00	0.200	ug/L	08.30.18 01.58	H1L1E8	1
Acetone	67-64-1	**45.6**	20.0	0.600	ug/L	08.30.18 01.58	H1	1
Benzene	71-43-2	<0.100	0.500	0.100	ug/L	08.30.18 01.58	H1E8	1
Bromobenzene	108-86-1	<0.0900	1.50	0.0900	ug/L	08.30.18 01.58	H1E8	1
Bromochloromethane	74-97-5	<0.200	0.500	0.200	ug/L	08.30.18 01.58	H1E8	1
Bromodichloromethane	75-27-4	<0.0800	0.500	0.0800	ug/L	08.30.18 01.58	H1E8	1
Bromoform	75-25-2	<0.100	1.00	0.100	ug/L	08.30.18 01.58	H1E8	1
Bromomethane	74-83-9	<0.300	5.00	0.300	ug/L	08.30.18 01.58	H1E8	1
Carbon Disulfide	75-15-0	<0.0900	0.500	0.0900	ug/L	08.30.18 01.58	H1E8	1
Carbon Tetrachloride	56-23-5	<0.200	0.500	0.200	ug/L	08.30.18 01.58	H1E8	1
Chlorobenzene	108-90-7	<0.0700	0.500	0.0700	ug/L	08.30.18 01.58	H1E8	1
Chloroethane	75-00-3	<0.600	4.00	0.600	ug/L	08.30.18 01.58	H1E8	1
Chloroform	67-66-3	<0.0700	0.500	0.0700	ug/L	08.30.18 01.58	H1E8	1

Certificate of Analytical Results 595904

AMEC Foster Wheeler, Phoenix, AZ

Cave Creek Landfill

Sample Id: **TSSV-07-742-081418**
Lab Sample Id: 595904-006

Matrix: Water
Date Collected: 08.14.18 07.10

Date Received:08.15.18 17.25

Analytical Method: VOCs by SW 8260B
Tech: MNI
Analyst: MNI
Seq Number: 3061683

Date Prep: 08.29.18 19.56

Prep Method: SW5030C
% Solids:

Parameter	Cas Number	Result	RL	MDL	Units	Analysis Date	Flag	Dil
Chloromethane	74-87-3	**7.06**	5.00	0.200	ug/L	08.30.18 01.58	H1	1
cis-1,2-Dichloroethene	156-59-2	<0.200	0.500	0.200	ug/L	08.30.18 01.58	H1E8	1
cis-1,3-Dichloropropene	10061-01-5	<0.0800	1.00	0.0800	ug/L	08.30.18 01.58	H1E8	1
Dibromochloromethane	124-48-1	<0.0700	0.500	0.0700	ug/L	08.30.18 01.58	H1E8	1
Dibromomethane	74-95-3	<0.200	0.500	0.200	ug/L	08.30.18 01.58	H1E8	1
Dichlorodifluoromethane	75-71-8	<0.200	2.00	0.200	ug/L	08.30.18 01.58	H1E8	1
Ethylbenzene	100-41-4	<0.0900	2.00	0.0900	ug/L	08.30.18 01.58	H1E8	1
Hexachlorobutadiene	87-68-3	<0.200	5.00	0.200	ug/L	08.30.18 01.58	H1E8	1
Iodomethane (Methyl Iodide)	74-88-4	<0.300	2.00	0.300	ug/L	08.30.18 01.58	H1E8	1
isopropylbenzene	98-82-8	<0.0800	2.50	0.0800	ug/L	08.30.18 01.58	H1E8	1
m,p-Xylenes	179601-23-1	<0.0900	2.00	0.0900	ug/L	08.30.18 01.58	H1E8	1
Methylene Chloride	75-09-2	<0.200	3.00	0.200	ug/L	08.30.18 01.58	H1E8	1
MTBE	1634-04-4	<0.100	2.00	0.100	ug/L	08.30.18 01.58	H1E8	1
Naphthalene	91-20-3	<0.200	5.00	0.200	ug/L	08.30.18 01.58	H1E8	1
n-Butylbenzene	104-51-8	<0.200	2.50	0.200	ug/L	08.30.18 01.58	H1E8	1
n-Propylbenzene	103-65-1	<0.0800	2.00	0.0800	ug/L	08.30.18 01.58	H1E8	1
o-Xylene	95-47-6	<0.0900	1.00	0.0900	ug/L	08.30.18 01.58	H1E8	1
p-Cymene (p-Isopropyltoluene)	99-87-6	<0.100	1.50	0.100	ug/L	08.30.18 01.58	H1E8	1
Sec-Butylbenzene	135-98-8	<0.100	1.50	0.100	ug/L	08.30.18 01.58	H1E8	1
Styrene	100-42-5	<0.0800	1.00	0.0800	ug/L	08.30.18 01.58	H1E8	1
tert-Butylbenzene	98-06-6	<0.200	2.50	0.200	ug/L	08.30.18 01.58	H1E8	1
Tetrachloroethylene	127-18-4	<0.0800	0.500	0.0800	ug/L	08.30.18 01.58	H1E8	1
Toluene	108-88-3	<0.0700	2.00	0.0700	ug/L	08.30.18 01.58	H1E8	1
Total Trihalomethane		<0.0700	0.500	0.0700	ug/L	08.30.18 01.58	H1E8	1
Total Xylenes	1330-20-7	<0.0900	1.00	0.0900	ug/L	08.30.18 01.58	H1E8	1
trans-1,2-dichloroethene	156-60-5	<0.0900	0.500	0.0900	ug/L	08.30.18 01.58	H1E8	1
Trichloroethene	79-01-6	**0.790**	0.500	0.200	ug/L	08.30.18 01.58	H1	1
Trichlorofluoromethane	75-69-4	<0.400	2.00	0.400	ug/L	08.30.18 01.58	H1E8	1
Vinyl Acetate	108-05-4	<0.200	5.00	0.200	ug/L	08.30.18 01.58	H1E8	1
Vinyl Chloride	75-01-4	<0.100	0.500	0.100	ug/L	08.30.18 01.58	H1E8	1
trans-1,3-dichloropropene	10061-02-6	<0.0600	0.500	0.0600	ug/L	08.30.18 01.58	H1E8	1
1,1,2-Trichloro-1,2,2-Trifluoroethane	76-13-1	<0.300	5.00	0.300	ug/L	08.30.18 01.58	H1E8	1
1,3-Butadiene	106-99-0	<0.276	5.00	0.276	ug/L	08.30.18 01.58	H1E8	1
Cyclohexane	110-82-7	<0.115	5.00	0.115	ug/L	08.30.18 01.58	H1E8	1
Dicyclopentadiene	77-73-6	<0.0540	5.00	0.0540	ug/L	08.30.18 01.58	H1E8	1
Methylcyclohexane	108-87-2	<0.117	5.00	0.117	ug/L	08.30.18 01.58	H1E8	1
n-Hexane	110-54-3	<0.0920	5.00	0.0920	ug/L	08.30.18 01.58	H1E8	1
4-Ethyltoluene	622-96-8	Not Present			ug/L	08.30.18 01.58	T4	1

Final 1.000

Certificate of Analytical Results 595904

AMEC Foster Wheeler, Phoenix, AZ

Cave Creek Landfill

Sample Id: **TSSV-07-742-081418**
Lab Sample Id: 595904-006

Matrix: Water
Date Collected: 08.14.18 07.10

Date Received:08.15.18 17.25

Analytical Method: VOCs by SW 8260B
Tech: MNI
Analyst: MNI
Seq Number: 3061683

Date Prep: 08.29.18 19.56

Prep Method: SW5030C
% Solids:

Parameter	Cas Number	Result	RL	MDL	Units	Analysis Date	Flag	Dil
Propene	115-07-1	Not Present			ug/L	08.30.18 01.58	T4	1

Surrogate	% Recovery	Units	Limits	Analysis Date	Flag
4-Bromofluorobenzene	94	%	74-124	08.30.18 01.58	
Dibromofluoromethane	105	%	75-131	08.30.18 01.58	
1,2-Dichloroethane-D4	104	%	63-144	08.30.18 01.58	
Toluene-D8	102	%	80-117	08.30.18 01.58	

Certificate of Analytical Results 595904

AMEC Foster Wheeler, Phoenix, AZ

Cave Creek Landfill

Sample Id: **EW01-740-081518** Matrix: Water Date Received:08.15.18 17.25
Lab Sample Id: 595904-007 Date Collected: 08.15.18 10.10

Analytical Method: VOCs by SW 8260B Prep Method: SW5030C
Tech: SAD % Solids:
Analyst: SAD Date Prep: 08.29.18 10.36
Seq Number: 3061633 SUB: AZ0765

Parameter	Cas Number	Result	RL	MDL	Units	Analysis Date	Flag	Dil
1,1,1,2-Tetrachloroethane	630-20-6	<0.195	5.00	0.195	ug/L	08.29.18 12.45	E8	1
1,1,1-Trichloroethane	71-55-6	<0.130	5.00	0.130	ug/L	08.29.18 12.45	E8	1
1,1,2,2-Tetrachloroethane	79-34-5	<0.365	5.00	0.365	ug/L	08.29.18 12.45	E8	1
1,1,2-Trichloroethane	79-00-5	<0.272	5.00	0.272	ug/L	08.29.18 12.45	E8	1
1,1-Dichloroethane	75-34-3	**0.270**	5.00	0.182	ug/L	08.29.18 12.45	E4	1
1,1-Dichloroethene	75-35-4	**0.630**	5.00	0.178	ug/L	08.29.18 12.45	E4	1
1,1-Dichloropropene	563-58-6	<0.257	5.00	0.257	ug/L	08.29.18 12.45	E8	1
1,2,3-Trichlorobenzene	87-61-6	<2.00	5.00	2.00	ug/L	08.29.18 12.45	E8	1
1,2,3-Trichloropropane	96-18-4	<0.214	5.00	0.214	ug/L	08.29.18 12.45	E8	1
1,2,4-Trichlorobenzene	120-82-1	<2.00	5.00	2.00	ug/L	08.29.18 12.45	E8	1
1,2,4-Trimethylbenzene	95-63-6	<0.113	5.00	0.113	ug/L	08.29.18 12.45	E8	1
1,2-Dibromo-3-Chloropropane	96-12-8	<0.707	5.00	0.707	ug/L	08.29.18 12.45	E8	1
1,2-Dibromoethane	106-93-4	<0.380	5.00	0.380	ug/L	08.29.18 12.45	E8	1
1,2-Dichlorobenzene	95-50-1	<0.175	5.00	0.175	ug/L	08.29.18 12.45	E8	1
1,2-Dichloroethane	107-06-2	<0.283	5.00	0.283	ug/L	08.29.18 12.45	E8	1
1,2-Dichloropropane	78-87-5	<0.170	5.00	0.170	ug/L	08.29.18 12.45	E8	1
1,3,5-Trimethylbenzene	108-67-8	<0.178	5.00	0.178	ug/L	08.29.18 12.45	E8	1
1,3-Dichlorobenzene	541-73-1	<0.169	5.00	0.169	ug/L	08.29.18 12.45	E8	1
1,3-Dichloropropane	142-28-9	<0.199	5.00	0.199	ug/L	08.29.18 12.45	E8	1
1,4-Dichlorobenzene	106-46-7	<0.222	5.00	0.222	ug/L	08.29.18 12.45	E8	1
2,2-Dichloropropane	594-20-7	<0.154	5.00	0.154	ug/L	08.29.18 12.45	E8	1
2-Butanone	78-93-3	<1.32	50.0	1.32	ug/L	08.29.18 12.45	E8	1
2-Chlorotoluene	95-49-8	<0.293	5.00	0.293	ug/L	08.29.18 12.45	E8	1
2-Hexanone	591-78-6	<1.05	50.0	1.05	ug/L	08.29.18 12.45	E8	1
4-Chlorotoluene	106-43-4	<0.114	5.00	0.114	ug/L	08.29.18 12.45	E8	1
4-Methyl-2-Pentanone	108-10-1	<0.874	50.0	0.874	ug/L	08.29.18 12.45	E8	1
Acetone	67-64-1	<20.0	100	20.0	ug/L	08.29.18 12.45	E8	1
Benzene	71-43-2	<0.185	5.00	0.185	ug/L	08.29.18 12.45	E8	1
Bromobenzene	108-86-1	<0.258	5.00	0.258	ug/L	08.29.18 12.45	E8	1
Bromochloromethane	74-97-5	<0.328	5.00	0.328	ug/L	08.29.18 12.45	E8	1
Bromodichloromethane	75-27-4	<0.164	5.00	0.164	ug/L	08.29.18 12.45	E8	1
Bromoform	75-25-2	<0.348	5.00	0.348	ug/L	08.29.18 12.45	E8	1
Bromomethane	74-83-9	<0.127	5.00	0.127	ug/L	08.29.18 12.45	E8	1
Carbon Disulfide	75-15-0	<0.173	5.00	0.173	ug/L	08.29.18 12.45	E8	1
Carbon Tetrachloride	56-23-5	<0.243	5.00	0.243	ug/L	08.29.18 12.45	E8	1
Chlorobenzene	108-90-7	<0.110	5.00	0.110	ug/L	08.29.18 12.45	E8	1
Chloroethane	75-00-3	<0.190	10.0	0.190	ug/L	08.29.18 12.45	E8	1
Chloroform	67-66-3	<0.107	5.00	0.107	ug/L	08.29.18 12.45	E8	1

Certificate of Analytical Results 595904

AMEC Foster Wheeler, Phoenix, AZ

Cave Creek Landfill

Sample Id: **EW01-740-081518** Matrix: Water Date Received:08.15.18 17.25
Lab Sample Id: 595904-007 Date Collected: 08.15.18 10.10

Analytical Method: VOCs by SW 8260B Prep Method: SW5030C
Tech: SAD % Solids:
Analyst: SAD Date Prep: 08.29.18 10.36
Seq Number: 3061633 SUB: AZ0765

Parameter	Cas Number	Result	RL	MDL	Units	Analysis Date	Flag	Dil
Chloromethane	74-87-3	<5.00	10.0	5.00	ug/L	08.29.18 12.45	E8	1
cis-1,2-Dichloroethene	156-59-2	<0.162	5.00	0.162	ug/L	08.29.18 12.45	E8	1
cis-1,3-Dichloropropene	10061-01-5	<0.126	5.00	0.126	ug/L	08.29.18 12.45	E8	1
Dibromochloromethane	124-48-1	<0.212	5.00	0.212	ug/L	08.29.18 12.45	E8	1
Dibromomethane	74-95-3	<0.186	5.00	0.186	ug/L	08.29.18 12.45	E8	1
Dichlorodifluoromethane	75-71-8	<0.148	5.00	0.148	ug/L	08.29.18 12.45	E8	1
Ethylbenzene	100-41-4	<0.190	5.00	0.190	ug/L	08.29.18 12.45	E8	1
Hexachlorobutadiene	87-68-3	<2.00	5.00	2.00	ug/L	08.29.18 12.45	E8	1
Iodomethane (Methyl Iodide)	74-88-4	<0.170	20.0	0.170	ug/L	08.29.18 12.45	E8	1
isopropylbenzene	98-82-8	<0.218	5.00	0.218	ug/L	08.29.18 12.45	E8	1
m,p-Xylenes	179601-23-1	<1.00	10.0	1.00	ug/L	08.29.18 12.45	E8	1
Methylene Chloride	75-09-2	<2.00	5.00	2.00	ug/L	08.29.18 12.45	E8	1
MTBE	1634-04-4	<0.500	5.00	0.500	ug/L	08.29.18 12.45	E8	1
Naphthalene	91-20-3	<2.00	10.0	2.00	ug/L	08.29.18 12.45	E8	1
n-Butylbenzene	104-51-8	<2.00	5.00	2.00	ug/L	08.29.18 12.45	E8	1
n-Propylbenzene	103-65-1	<0.173	5.00	0.173	ug/L	08.29.18 12.45	E8	1
o-Xylene	95-47-6	<0.500	5.00	0.500	ug/L	08.29.18 12.45	E8	1
p-Cymene (p-Isopropyltoluene)	99-87-6	<0.150	5.00	0.150	ug/L	08.29.18 12.45	E8	1
Sec-Butylbenzene	135-98-8	<0.124	5.00	0.124	ug/L	08.29.18 12.45	E8	1
Styrene	100-42-5	<0.197	5.00	0.197	ug/L	08.29.18 12.45	E8	1
tert-Butylbenzene	98-06-6	<0.177	5.00	0.177	ug/L	08.29.18 12.45	E8	1
Tetrachloroethylene	127-18-4	**0.670**	5.00	0.347	ug/L	08.29.18 12.45	E4	1
Toluene	108-88-3	<0.500	5.00	0.500	ug/L	08.29.18 12.45	E8	1
Total Trihalomethane		<0.107	5.00	0.107	ug/L	08.29.18 12.45	E8	1
Total Xylenes	1330-20-7	<0.500	5.00	0.500	ug/L	08.29.18 12.45	E8	1
trans-1,2-dichloroethene	156-60-5	<0.167	5.00	0.167	ug/L	08.29.18 12.45	E8	1
Trichloroethene	79-01-6	**19.0**	5.00	0.218	ug/L	08.29.18 12.45		1
Trichlorofluoromethane	75-69-4	<0.191	5.00	0.191	ug/L	08.29.18 12.45	E8	1
Vinyl Acetate	108-05-4	<0.583	50.0	0.583	ug/L	08.29.18 12.45	E8	1
Vinyl Chloride	75-01-4	<0.232	2.00	0.232	ug/L	08.29.18 12.45	E8	1
trans-1,3-dichloropropene	10061-02-6	<0.198	5.00	0.198	ug/L	08.29.18 12.45	E8	1
1,1,2-Trichloro-1,2,2-Trifluoroethane	76-13-1	<0.175	10.0	0.175	ug/L	08.29.18 12.45	E8	1
1,3-Butadiene	106-99-0	<2.52	5.00	2.52	ug/L	08.29.18 12.45	E8	1
Cyclohexane *	110-82-7	<0.309	5.00	0.309	ug/L	08.29.18 12.45	E8	1
Dicyclopentadiene	77-73-6	<0.0540	5.00	0.0540	ug/L	08.29.18 12.45	E8	1
Methylcyclohexane	108-87-2	<0.228	10.0	0.228	ug/L	08.29.18 12.45	E8	1
n-Hexane	110-54-3	<5.00	10.0	5.00	ug/L	08.29.18 12.45	E8	1
4-Ethyltoluene	622-96-8	Not Present			ug/L	08.29.18 12.45	T4E8	1

Certificate of Analytical Results 595904

AMEC Foster Wheeler, Phoenix, AZ

Cave Creek Landfill

Sample Id: **EW01-740-081518**
Lab Sample Id: 595904-007

Matrix: Water
Date Collected: 08.15.18 10.10

Date Received:08.15.18 17.25

Analytical Method: VOCs by SW 8260B
Tech: SAD
Analyst: SAD
Seq Number: 3061633

Date Prep: 08.29.18 10.36

Prep Method: SW5030C
% Solids:

SUB: AZ0765

Parameter	Cas Number	Result	RL	MDL	Units	Analysis Date	Flag	Dil
Propene	115-07-1	Not Present			ug/L	08.29.18 12.45	T4E8	1

Surrogate	% Recovery	Units	Limits	Analysis Date	Flag
Dibromofluoromethane	97	%	75-131	08.29.18 12.45	
1,2-Dichloroethane-D4	96	%	63-144	08.29.18 12.45	
Toluene-D8	105	%	80-117	08.29.18 12.45	
4-Bromofluorobenzene	99	%	74-124	08.29.18 12.45	

Certificate of Analytical Results 595904

AMEC Foster Wheeler, Phoenix, AZ

Cave Creek Landfill

Sample Id: **MW09-718-081418** Matrix: Water Date Received:08.15.18 17.25
Lab Sample Id: 595904-008 Date Collected: 08.14.18 09.00

Analytical Method: VOCs by SW 8260B Prep Method: SW5030C
Tech: MNI % Solids:
Analyst: MNI Date Prep: 08.27.18 10.50
Seq Number: 3061308

Parameter	Cas Number	Result	RL	MDL	Units	Analysis Date	Flag	Dil
1,1,1,2-Tetrachloroethane	630-20-6	<0.100	0.500	0.100	ug/L	08.27.18 22.01	E8	1
1,1,1-Trichloroethane	71-55-6	<0.200	0.500	0.200	ug/L	08.27.18 22.01	E8	1
1,1,2,2-Tetrachloroethane	79-34-5	<0.100	0.500	0.100	ug/L	08.27.18 22.01	E8	1
1,1,2-Trichloroethane	79-00-5	<0.0900	0.500	0.0900	ug/L	08.27.18 22.01	E8	1
1,1-Dichloroethane	75-34-3	<0.0700	0.500	0.0700	ug/L	08.27.18 22.01	E8	1
1,1-Dichloroethene	75-35-4	<0.200	0.500	0.200	ug/L	08.27.18 22.01	E8	1
1,1-Dichloropropene	563-58-6	<0.200	1.00	0.200	ug/L	08.27.18 22.01	E8	1
1,2,3-Trichlorobenzene	87-61-6	<0.200	5.00	0.200	ug/L	08.27.18 22.01	E8	1
1,2,3-Trichloropropane	96-18-4	<0.200	1.00	0.200	ug/L	08.27.18 22.01	E8	1
1,2,4-Trichlorobenzene	120-82-1	<0.0700	5.00	0.0700	ug/L	08.27.18 22.01	E8	1
1,2,4-Trimethylbenzene	95-63-6	<0.0700	2.00	0.0700	ug/L	08.27.18 22.01	E8	1
1,2-Dibromo-3-Chloropropane	96-12-8	<0.300	2.00	0.300	ug/L	08.27.18 22.01	E8	1
1,2-Dibromoethane	106-93-4	<0.200	0.500	0.200	ug/L	08.27.18 22.01	E8	1
1,2-Dichlorobenzene	95-50-1	<0.0800	1.50	0.0800	ug/L	08.27.18 22.01	E8	1
1,2-Dichloroethane	107-06-2	<0.100	0.500	0.100	ug/L	08.27.18 22.01	E8	1
1,2-Dichloropropane	78-87-5	<0.0900	0.500	0.0900	ug/L	08.27.18 22.01	E8	1
1,3,5-Trimethylbenzene	108-67-8	<0.0700	1.50	0.0700	ug/L	08.27.18 22.01	E8	1
1,3-Dichlorobenzene	541-73-1	<0.0600	1.50	0.0600	ug/L	08.27.18 22.01	E8	1
1,3-Dichloropropane	142-28-9	<0.0700	1.00	0.0700	ug/L	08.27.18 22.01	E8	1
1,4-Dichlorobenzene	106-46-7	<0.200	1.50	0.200	ug/L	08.27.18 22.01	E8	1
2,2-Dichloropropane	594-20-7	<0.200	0.500	0.200	ug/L	08.27.18 22.01	E8	1
2-Butanone	78-93-3	<0.300	5.00	0.300	ug/L	08.27.18 22.01	E8	1
2-Chlorotoluene	95-49-8	<0.0800	1.50	0.0800	ug/L	08.27.18 22.01	E8	1
2-Hexanone	591-78-6	<0.200	5.00	0.200	ug/L	08.27.18 22.01	E8L1	1
4-Chlorotoluene	106-43-4	<0.0700	2.00	0.0700	ug/L	08.27.18 22.01	E8	1
4-Methyl-2-Pentanone	108-10-1	<0.200	5.00	0.200	ug/L	08.27.18 22.01	E8L1	1
Acetone	67-64-1	**61.0**	20.0	0.600	ug/L	08.27.18 22.01		1
Benzene	71-43-2	<0.100	0.500	0.100	ug/L	08.27.18 22.01	E8	1
Bromobenzene	108-86-1	<0.0900	1.50	0.0900	ug/L	08.27.18 22.01	E8	1
Bromochloromethane	74-97-5	<0.200	0.500	0.200	ug/L	08.27.18 22.01	E8	1
Bromodichloromethane	75-27-4	<0.0800	0.500	0.0800	ug/L	08.27.18 22.01	E8	1
Bromoform	75-25-2	<0.100	1.00	0.100	ug/L	08.27.18 22.01	E8	1
Bromomethane	74-83-9	<0.300	5.00	0.300	ug/L	08.27.18 22.01	E8	1
Carbon Disulfide	75-15-0	<0.0900	0.500	0.0900	ug/L	08.27.18 22.01	E8	1
Carbon Tetrachloride	56-23-5	<0.200	0.500	0.200	ug/L	08.27.18 22.01	E8	1
Chlorobenzene	108-90-7	<0.0700	0.500	0.0700	ug/L	08.27.18 22.01	E8	1
Chloroethane	75-00-3	<0.600	4.00	0.600	ug/L	08.27.18 22.01	E8	1
Chloroform	67-66-3	**1.62**	0.500	0.0700	ug/L	08.27.18 22.01	B1	1

Certificate of Analytical Results 595904

AMEC Foster Wheeler, Phoenix, AZ

Cave Creek Landfill

Sample Id: **MW09-718-081418** Matrix: Water Date Received:08.15.18 17.25
Lab Sample Id: 595904-008 Date Collected: 08.14.18 09.00

Analytical Method: VOCs by SW 8260B Prep Method: SW5030C
Tech: MNI % Solids:
Analyst: MNI Date Prep: 08.27.18 10.50
Seq Number: 3061308

Parameter	Cas Number	Result	RL	MDL	Units	Analysis Date	Flag	Dil
Chloromethane	74-87-3	**1.41**	5.00	0.200	ug/L	08.27.18 22.01	E4	1
cis-1,2-Dichloroethene	156-59-2	**2.84**	0.500	0.200	ug/L	08.27.18 22.01		1
cis-1,3-Dichloropropene	10061-01-5	<0.0800	1.00	0.0800	ug/L	08.27.18 22.01	E8	1
Dibromochloromethane	124-48-1	<0.0700	0.500	0.0700	ug/L	08.27.18 22.01	E8	1
Dibromomethane	74-95-3	<0.200	0.500	0.200	ug/L	08.27.18 22.01	E8	1
Dichlorodifluoromethane	75-71-8	<0.200	2.00	0.200	ug/L	08.27.18 22.01	E8	1
Ethylbenzene	100-41-4	<0.0900	2.00	0.0900	ug/L	08.27.18 22.01	E8	1
Hexachlorobutadiene	87-68-3	<0.200	5.00	0.200	ug/L	08.27.18 22.01	E8	1
Iodomethane (Methyl Iodide)	74-88-4	<0.300	2.00	0.300	ug/L	08.27.18 22.01	E8	1
isopropylbenzene	98-82-8	<0.0800	2.50	0.0800	ug/L	08.27.18 22.01	E8	1
m,p-Xylenes	179601-23-1	<0.0900	2.00	0.0900	ug/L	08.27.18 22.01	E8	1
Methylene Chloride	75-09-2	<0.200	3.00	0.200	ug/L	08.27.18 22.01	E8	1
MTBE	1634-04-4	<0.100	2.00	0.100	ug/L	08.27.18 22.01	E8	1
Naphthalene	91-20-3	<0.200	5.00	0.200	ug/L	08.27.18 22.01	E8	1
n-Butylbenzene	104-51-8	<0.200	2.50	0.200	ug/L	08.27.18 22.01	E8	1
n-Propylbenzene	103-65-1	<0.0800	2.00	0.0800	ug/L	08.27.18 22.01	E8	1
o-Xylene	95-47-6	<0.0900	1.00	0.0900	ug/L	08.27.18 22.01	E8	1
p-Cymene (p-Isopropyltoluene)	99-87-6	<0.100	1.50	0.100	ug/L	08.27.18 22.01	E8	1
Sec-Butylbenzene	135-98-8	<0.100	1.50	0.100	ug/L	08.27.18 22.01	E8	1
Styrene	100-42-5	<0.0800	1.00	0.0800	ug/L	08.27.18 22.01	E8	1
tert-Butylbenzene	98-06-6	<0.200	2.50	0.200	ug/L	08.27.18 22.01	E8	1
Tetrachloroethylene	127-18-4	**0.650**	0.500	0.0800	ug/L	08.27.18 22.01		1
Toluene	108-88-3	<0.0700	2.00	0.0700	ug/L	08.27.18 22.01	E8	1
Total Trihalomethane		**1.62**	0.500	0.0700	ug/L	08.27.18 22.01		1
Total Xylenes	1330-20-7	<0.0900	1.00	0.0900	ug/L	08.27.18 22.01	E8	1
trans-1,2-dichloroethene	156-60-5	<0.0900	0.500	0.0900	ug/L	08.27.18 22.01	E8	1
Trichloroethene	79-01-6	**18.4**	0.500	0.200	ug/L	08.27.18 22.01		1
Trichlorofluoromethane	75-69-4	<0.400	2.00	0.400	ug/L	08.27.18 22.01	E8	1
Vinyl Acetate	108-05-4	<0.200	5.00	0.200	ug/L	08.27.18 22.01	E8	1
Vinyl Chloride	75-01-4	<0.100	0.500	0.100	ug/L	08.27.18 22.01	E8	1
trans-1,3-dichloropropene	10061-02-6	<0.0600	0.500	0.0600	ug/L	08.27.18 22.01	E8	1
1,1,2-Trichloro-1,2,2-Trifluoroethane	76-13-1	<0.300	5.00	0.300	ug/L	08.27.18 22.01	E8	1
1,3-Butadiene	106-99-0	<0.276	5.00	0.276	ug/L	08.27.18 22.01	E8	1
Cyclohexane	110-82-7	<0.115	5.00	0.115	ug/L	08.27.18 22.01	E8	1
Dicyclopentadiene	77-73-6	<0.0540	5.00	0.0540	ug/L	08.27.18 22.01	E8	1
Methylcyclohexane	108-87-2	<0.117	5.00	0.117	ug/L	08.27.18 22.01	E8	1
n-Hexane	110-54-3	<0.0920	5.00	0.0920	ug/L	08.27.18 22.01	E8	1
4-Ethyltoluene	622-96-8	Not Present			ug/L	08.27.18 22.01	T4E8	1

Certificate of Analytical Results 595904

AMEC Foster Wheeler, Phoenix, AZ

Cave Creek Landfill

Sample Id: **MW09-718-081418**
Lab Sample Id: 595904-008

Matrix: Water
Date Collected: 08.14.18 09.00

Date Received:08.15.18 17.25

Analytical Method: VOCs by SW 8260B
Tech: MNI
Analyst: MNI
Seq Number: 3061308

Date Prep: 08.27.18 10.50

Prep Method: SW5030C
% Solids:

Parameter	Cas Number	Result	RL	MDL	Units	Analysis Date	Flag	Dil
Propene	115-07-1	Not Present			ug/L	08.27.18 22.01	T4E8	1

Surrogate	% Recovery	Units	Limits	Analysis Date	Flag
4-Bromofluorobenzene	92	%	74-124	08.27.18 22.01	
Dibromofluoromethane	87	%	75-131	08.27.18 22.01	
1,2-Dichloroethane-D4	117	%	63-144	08.27.18 22.01	
Toluene-D8	88	%	80-117	08.27.18 22.01	

Certificate of Analytical Results 595904

AMEC Foster Wheeler, Phoenix, AZ

Cave Creek Landfill

Sample Id: **MW10-704-081418** Matrix: Water Date Received:08.15.18 17.25
Lab Sample Id: 595904-009 Date Collected: 08.14.18 09.50

Analytical Method: VOCs by SW 8260B Prep Method: SW5030C
Tech: MNI % Solids:
Analyst: MNI Date Prep: 08.27.18 10.50
Seq Number: 3061308

Dilution Analysis:
Seq#: 3061683 Date Analyzed: 08/30/18 01:32 Date Prep: 08/29/18 19:56

Parameter	Cas Number	Result	RL	MDL	Units	Analysis Date	Flag	Dil
1,1,1,2-Tetrachloroethane	630-20-6	<0.100	0.500	0.100	ug/L	08.27.18 22.27	E8	1
1,1,1-Trichloroethane	71-55-6	<0.200	0.500	0.200	ug/L	08.27.18 22.27	E8	1
1,1,2,2-Tetrachloroethane	79-34-5	<0.100	0.500	0.100	ug/L	08.27.18 22.27	E8	1
1,1,2-Trichloroethane	79-00-5	<0.0900	0.500	0.0900	ug/L	08.27.18 22.27	E8	1
1,1-Dichloroethane	75-34-3	**1.80**	0.500	0.0700	ug/L	08.27.18 22.27		1
1,1-Dichloroethene	75-35-4	<0.200	0.500	0.200	ug/L	08.27.18 22.27	E8	1
1,1-Dichloropropene	563-58-6	<0.200	1.00	0.200	ug/L	08.27.18 22.27	E8	1
1,2,3-Trichlorobenzene	87-61-6	<0.200	5.00	0.200	ug/L	08.27.18 22.27	E8	1
1,2,3-Trichloropropane	96-18-4	<0.200	1.00	0.200	ug/L	08.27.18 22.27	E8	1
1,2,4-Trichlorobenzene	120-82-1	<0.0700	5.00	0.0700	ug/L	08.27.18 22.27	E8	1
1,2,4-Trimethylbenzene	95-63-6	<0.0700	2.00	0.0700	ug/L	08.27.18 22.27	E8	1
1,2-Dibromo-3-Chloropropane	96-12-8	<0.300	2.00	0.300	ug/L	08.27.18 22.27	E8	1
1,2-Dibromoethane	106-93-4	<0.200	0.500	0.200	ug/L	08.27.18 22.27	E8	1
1,2-Dichlorobenzene	95-50-1	<0.0800	1.50	0.0800	ug/L	08.27.18 22.27	E8	1
1,2-Dichloroethane	107-06-2	<0.100	0.500	0.100	ug/L	08.27.18 22.27	E8	1
1,2-Dichloropropane	78-87-5	<0.0900	0.500	0.0900	ug/L	08.27.18 22.27	E8	1
1,3,5-Trimethylbenzene	108-67-8	<0.0700	1.50	0.0700	ug/L	08.27.18 22.27	E8	1
1,3-Dichlorobenzene	541-73-1	<0.0600	1.50	0.0600	ug/L	08.27.18 22.27	E8	1
1,3-Dichloropropane	142-28-9	<0.0700	1.00	0.0700	ug/L	08.27.18 22.27	E8	1
1,4-Dichlorobenzene	106-46-7	<0.200	1.50	0.200	ug/L	08.27.18 22.27	E8	1
2,2-Dichloropropane	594-20-7	<0.200	0.500	0.200	ug/L	08.27.18 22.27	E8	1
2-Butanone	78-93-3	<0.300	5.00	0.300	ug/L	08.27.18 22.27	E8	1
2-Chlorotoluene	95-49-8	<0.0800	1.50	0.0800	ug/L	08.27.18 22.27	E8	1
2-Hexanone	591-78-6	<0.200	5.00	0.200	ug/L	08.27.18 22.27	E8L1	1
4-Chlorotoluene	106-43-4	<0.0700	2.00	0.0700	ug/L	08.27.18 22.27	E8	1
4-Methyl-2-Pentanone	108-10-1	<0.200	5.00	0.200	ug/L	08.27.18 22.27	E8L1	1
Acetone	67-64-1	**60.4**	20.0	0.600	ug/L	08.27.18 22.27		1
Benzene	71-43-2	<0.100	0.500	0.100	ug/L	08.27.18 22.27	E8	1
Bromobenzene	108-86-1	<0.0900	1.50	0.0900	ug/L	08.27.18 22.27	E8	1
Bromochloromethane	74-97-5	<0.200	0.500	0.200	ug/L	08.27.18 22.27	E8	1
Bromodichloromethane	75-27-4	<0.0800	0.500	0.0800	ug/L	08.27.18 22.27	E8	1
Bromoform	75-25-2	<0.100	1.00	0.100	ug/L	08.27.18 22.27	E8	1
Bromomethane	74-83-9	<0.300	5.00	0.300	ug/L	08.27.18 22.27	E8	1
Carbon Disulfide	75-15-0	<0.0900	0.500	0.0900	ug/L	08.27.18 22.27	E8	1
Carbon Tetrachloride	56-23-5	<0.200	0.500	0.200	ug/L	08.27.18 22.27	E8	1

Certificate of Analytical Results 595904

AMEC Foster Wheeler, Phoenix, AZ

Cave Creek Landfill

Sample Id: **MW10-704-081418** Matrix: Water Date Received:08.15.18 17.25
Lab Sample Id: 595904-009 Date Collected: 08.14.18 09.50

Analytical Method: VOCs by SW 8260B Prep Method: SW5030C
Tech: MNI % Solids:
Analyst: MNI Date Prep: 08.27.18 10.50
Seq Number: 3061308

Dilution Analysis:
Seq#: 3061683 Date Analyzed: 08/30/18 01:32 Date Prep: 08/29/18 19:56

Parameter	Cas Number	Result	RL	MDL	Units	Analysis Date	Flag	Dil
Chlorobenzene	108-90-7	<0.0700	0.500	0.0700	ug/L	08.27.18 22.27	E8	1
Chloroethane	75-00-3	<0.600	4.00	0.600	ug/L	08.27.18 22.27	E8	1
Chloroform	67-66-3	**3.16**	0.500	0.0700	ug/L	08.27.18 22.27	B1	1
Chloromethane	74-87-3	**1.00**	5.00	0.200	ug/L	08.27.18 22.27	E4	1
cis-1,2-Dichloroethene	156-59-2	**26.5**	0.500	0.200	ug/L	08.27.18 22.27		1
cis-1,3-Dichloropropene	10061-01-5	<0.0800	1.00	0.0800	ug/L	08.27.18 22.27	E8	1
Dibromochloromethane	124-48-1	<0.0700	0.500	0.0700	ug/L	08.27.18 22.27	E8	1
Dibromomethane	74-95-3	<0.200	0.500	0.200	ug/L	08.27.18 22.27	E8	1
Dichlorodifluoromethane	75-71-8	<0.200	2.00	0.200	ug/L	08.27.18 22.27	E8	1
Ethylbenzene	100-41-4	<0.0900	2.00	0.0900	ug/L	08.27.18 22.27	E8	1
Hexachlorobutadiene	87-68-3	<0.200	5.00	0.200	ug/L	08.27.18 22.27	E8	1
Iodomethane (Methyl Iodide)	74-88-4	<0.300	2.00	0.300	ug/L	08.27.18 22.27	E8	1
isopropylbenzene	98-82-8	<0.0800	2.50	0.0800	ug/L	08.27.18 22.27	E8	1
m,p-Xylenes	179601-23-1	<0.0900	2.00	0.0900	ug/L	08.27.18 22.27	E8	1
Methylene Chloride	75-09-2	<0.200	3.00	0.200	ug/L	08.27.18 22.27	E8	1
MTBE	1634-04-4	<0.100	2.00	0.100	ug/L	08.27.18 22.27	E8	1
Naphthalene	91-20-3	<0.200	5.00	0.200	ug/L	08.27.18 22.27	E8	1
n-Butylbenzene	104-51-8	<0.200	2.50	0.200	ug/L	08.27.18 22.27	E8	1
n-Propylbenzene	103-65-1	<0.0800	2.00	0.0800	ug/L	08.27.18 22.27	E8	1
o-Xylene	95-47-6	<0.0900	1.00	0.0900	ug/L	08.27.18 22.27	E8	1
p-Cymene (p-Isopropyltoluene)	99-87-6	<0.100	1.50	0.100	ug/L	08.27.18 22.27	E8	1
Sec-Butylbenzene	135-98-8	<0.100	1.50	0.100	ug/L	08.27.18 22.27	E8	1
Styrene	100-42-5	<0.0800	1.00	0.0800	ug/L	08.27.18 22.27	E8	1
tert-Butylbenzene	98-06-6	<0.200	2.50	0.200	ug/L	08.27.18 22.27	E8	1
Tetrachloroethylene	127-18-4	**9.21**	0.500	0.0800	ug/L	08.27.18 22.27		1
Toluene	108-88-3	<0.0700	2.00	0.0700	ug/L	08.27.18 22.27	E8	1
Total Trihalomethane		**3.16**	0.500	0.0700	ug/L	08.27.18 22.27		1
Total Xylenes	1330-20-7	<0.0900	1.00	0.0900	ug/L	08.27.18 22.27	E8	1
trans-1,2-dichloroethene	156-60-5	<0.0900	0.500	0.0900	ug/L	08.27.18 22.27	E8	1
Trichloroethene	79-01-6	**354**	5.00	2.00	ug/L	08.30.18 01.32	D2	10
Trichlorofluoromethane	75-69-4	<0.400	2.00	0.400	ug/L	08.27.18 22.27	E8	1
Vinyl Acetate	108-05-4	<0.200	5.00	0.200	ug/L	08.27.18 22.27	E8	1
Vinyl Chloride	75-01-4	**0.650**	0.500	0.100	ug/L	08.27.18 22.27		1
trans-1,3-dichloropropene	10061-02-6	<0.0600	0.500	0.0600	ug/L	08.27.18 22.27	E8	1
1,1,2-Trichloro-1,2,2-Trifluoroetha	76-13-1	**2.54**	5.00	0.300	ug/L	08.27.18 22.27	E4	1

Certificate of Analytical Results 595904

AMEC Foster Wheeler, Phoenix, AZ

Cave Creek Landfill

Sample Id: **MW10-704-081418**
Matrix: Water
Date Received:08.15.18 17.25
Lab Sample Id: 595904-009
Date Collected: 08.14.18 09.50

Analytical Method: VOCs by SW 8260B
Prep Method: SW5030C
Tech: MNI
% Solids:
Analyst: MNI
Date Prep: 08.27.18 10.50
Seq Number: 3061308

Dilution Analysis:
Seq#: 3061683 Date Analyzed: 08/30/18 01:32 Date Prep: 08/29/18 19:56

Parameter	Cas Number	Result	RL	MDL	Units	Analysis Date	Flag	Dil
1,3-Butadiene	106-99-0	<0.276	5.00	0.276	ug/L	08.27.18 22.27	E8	1
Cyclohexane	110-82-7	**0.530**	5.00	0.115	ug/L	08.27.18 22.27	E4	1
Dicyclopentadiene	77-73-6	<0.0540	5.00	0.0540	ug/L	08.27.18 22.27	E8	1
Methylcyclohexane	108-87-2	<0.117	5.00	0.117	ug/L	08.27.18 22.27	E8	1
n-Hexane	110-54-3	<0.0920	5.00	0.0920	ug/L	08.27.18 22.27	E8	1
4-Ethyltoluene	622-96-8	Not Present			ug/L	08.27.18 22.27	T4E8	1
Propene	115-07-1	Not Present			ug/L	08.27.18 22.27	T4E8	1

Surrogate	% Recovery	Units	Limits	Analysis Date	Flag
4-Bromofluorobenzene	92	%	74-124	08.27.18 22.27	
Dibromofluoromethane	101	%	75-131	08.27.18 22.27	
1,2-Dichloroethane-D4	87	%	63-144	08.27.18 22.27	
Toluene-D8	96	%	80-117	08.27.18 22.27	

Certificate of Analytical Results 595904

AMEC Foster Wheeler, Phoenix, AZ

Cave Creek Landfill

Sample Id: **DUP02-081518** Matrix: Water Date Received:08.15.18 17.25
Lab Sample Id: 595904-010 Date Collected: 08.15.18 11.10

Analytical Method: VOCs by SW 8260B Prep Method: SW5030C
Tech: SAD % Solids:
Analyst: SAD Date Prep: 08.29.18 10.38
Seq Number: 3061633 SUB: AZ0765

Dilution Analysis:
Seq#: 3061633 Date Analyzed: 08/29/18 14:42 Date Prep: 08/29/18 10:42

Parameter	Cas Number	Result	RL	MDL	Units	Analysis Date	Flag	Dil
1,1,1,2-Tetrachloroethane	630-20-6	<0.195	5.00	0.195	ug/L	08.29.18 13.08	E8	1
1,1,1-Trichloroethane	71-55-6	<0.130	5.00	0.130	ug/L	08.29.18 13.08	E8	1
1,1,2,2-Tetrachloroethane	79-34-5	<0.365	5.00	0.365	ug/L	08.29.18 13.08	E8	1
1,1,2-Trichloroethane	79-00-5	<0.272	5.00	0.272	ug/L	08.29.18 13.08	E8	1
1,1-Dichloroethane	75-34-3	<0.182	5.00	0.182	ug/L	08.29.18 13.08	E8	1
1,1-Dichloroethene	75-35-4	<0.178	5.00	0.178	ug/L	08.29.18 13.08	E8	1
1,1-Dichloropropene	563-58-6	<0.257	5.00	0.257	ug/L	08.29.18 13.08	E8	1
1,2,3-Trichlorobenzene	87-61-6	<2.00	5.00	2.00	ug/L	08.29.18 13.08	E8	1
1,2,3-Trichloropropane	96-18-4	<0.214	5.00	0.214	ug/L	08.29.18 13.08	E8	1
1,2,4-Trichlorobenzene	120-82-1	<2.00	5.00	2.00	ug/L	08.29.18 13.08	E8	1
1,2,4-Trimethylbenzene	95-63-6	<0.113	5.00	0.113	ug/L	08.29.18 13.08	E8	1
1,2-Dibromo-3-Chloropropane	96-12-8	<0.707	5.00	0.707	ug/L	08.29.18 13.08	E8	1
1,2-Dibromoethane	106-93-4	<0.380	5.00	0.380	ug/L	08.29.18 13.08	E8	1
1,2-Dichlorobenzene	95-50-1	<0.175	5.00	0.175	ug/L	08.29.18 13.08	E8	1
1,2-Dichloroethane	107-06-2	<0.283	5.00	0.283	ug/L	08.29.18 13.08	E8	1
1,2-Dichloropropane	78-87-5	<0.170	5.00	0.170	ug/L	08.29.18 13.08	E8	1
1,3,5-Trimethylbenzene	108-67-8	<0.178	5.00	0.178	ug/L	08.29.18 13.08	E8	1
1,3-Dichlorobenzene	541-73-1	<0.169	5.00	0.169	ug/L	08.29.18 13.08	E8	1
1,3-Dichloropropane	142-28-9	<0.199	5.00	0.199	ug/L	08.29.18 13.08	E8	1
1,4-Dichlorobenzene	106-46-7	<0.222	5.00	0.222	ug/L	08.29.18 13.08	E8	1
2,2-Dichloropropane	594-20-7	<0.154	5.00	0.154	ug/L	08.29.18 13.08	E8	1
2-Butanone	78-93-3	<1.32	50.0	1.32	ug/L	08.29.18 13.08	E8	1
2-Chlorotoluene	95-49-8	<0.293	5.00	0.293	ug/L	08.29.18 13.08	E8	1
2-Hexanone	591-78-6	<1.05	50.0	1.05	ug/L	08.29.18 13.08	E8	1
4-Chlorotoluene	106-43-4	<0.114	5.00	0.114	ug/L	08.29.18 13.08	E8	1
4-Methyl-2-Pentanone	108-10-1	<0.874	50.0	0.874	ug/L	08.29.18 13.08	E8	1
Acetone	67-64-1	<20.0	100	20.0	ug/L	08.29.18 13.08	E8	1
Benzene	71-43-2	<0.185	5.00	0.185	ug/L	08.29.18 13.08	E8	1
Bromobenzene	108-86-1	<0.258	5.00	0.258	ug/L	08.29.18 13.08	E8	1
Bromochloromethane	74-97-5	<0.328	5.00	0.328	ug/L	08.29.18 13.08	E8	1
Bromodichloromethane	75-27-4	<0.164	5.00	0.164	ug/L	08.29.18 13.08	E8	1
Bromoform	75-25-2	<0.348	5.00	0.348	ug/L	08.29.18 13.08	E8	1
Bromomethane	74-83-9	<0.127	5.00	0.127	ug/L	08.29.18 13.08	E8	1
Carbon Disulfide	75-15-0	<0.173	5.00	0.173	ug/L	08.29.18 13.08	E8	1
Carbon Tetrachloride	56-23-5	<0.243	5.00	0.243	ug/L	08.29.18 13.08	E8	1

Certificate of Analytical Results 595904

AMEC Foster Wheeler, Phoenix, AZ

Cave Creek Landfill

Sample Id: **DUP02-081518** Matrix: Water Date Received:08.15.18 17.25
Lab Sample Id: 595904-010 Date Collected: 08.15.18 11.10

Analytical Method: VOCs by SW 8260B Prep Method: SW5030C
Tech: SAD % Solids:
Analyst: SAD Date Prep: 08.29.18 10.38
Seq Number: 3061633 SUB: AZ0765

Dilution Analysis:
Seq#: 3061633 Date Analyzed: 08/29/18 14:42 Date Prep: 08/29/18 10:42

Parameter	Cas Number	Result	RL	MDL	Units	Analysis Date	Flag	Dil
Chlorobenzene	108-90-7	<0.110	5.00	0.110	ug/L	08.29.18 13.08	E8	1
Chloroethane	75-00-3	<0.190	10.0	0.190	ug/L	08.29.18 13.08	E8	1
Chloroform	67-66-3	**0.490**	5.00	0.107	ug/L	08.29.18 13.08	E4	1
Chloromethane	74-87-3	<5.00	10.0	5.00	ug/L	08.29.18 13.08	E8	1
cis-1,2-Dichloroethene	156-59-2	**10.7**	5.00	0.162	ug/L	08.29.18 13.08		1
cis-1,3-Dichloropropene	10061-01-5	<0.126	5.00	0.126	ug/L	08.29.18 13.08	E8	1
Dibromochloromethane	124-48-1	<0.212	5.00	0.212	ug/L	08.29.18 13.08	E8	1
Dibromomethane	74-95-3	<0.186	5.00	0.186	ug/L	08.29.18 13.08	E8	1
Dichlorodifluoromethane	75-71-8	<0.148	5.00	0.148	ug/L	08.29.18 13.08	E8	1
Ethylbenzene	100-41-4	<0.190	5.00	0.190	ug/L	08.29.18 13.08	E8	1
Hexachlorobutadiene	87-68-3	<2.00	5.00	2.00	ug/L	08.29.18 13.08	E8	1
Iodomethane (Methyl Iodide)	74-88-4	<0.170	20.0	0.170	ug/L	08.29.18 13.08	E8	1
isopropylbenzene	98-82-8	<0.218	5.00	0.218	ug/L	08.29.18 13.08	E8	1
m,p-Xylenes	179601-23-1	<1.00	10.0	1.00	ug/L	08.29.18 13.08	E8	1
Methylene Chloride	75-09-2	<2.00	5.00	2.00	ug/L	08.29.18 13.08	E8	1
MTBE	1634-04-4	<0.500	5.00	0.500	ug/L	08.29.18 13.08	E8	1
Naphthalene	91-20-3	<2.00	10.0	2.00	ug/L	08.29.18 13.08	E8	1
n-Butylbenzene	104-51-8	<2.00	5.00	2.00	ug/L	08.29.18 13.08	E8	1
n-Propylbenzene	103-65-1	<0.173	5.00	0.173	ug/L	08.29.18 13.08	E8	1
o-Xylene	95-47-6	<0.500	5.00	0.500	ug/L	08.29.18 13.08	E8	1
p-Cymene (p-Isopropyltoluene)	99-87-6	<0.150	5.00	0.150	ug/L	08.29.18 13.08	E8	1
Sec-Butylbenzene	135-98-8	<0.124	5.00	0.124	ug/L	08.29.18 13.08	E8	1
Styrene	100-42-5	<0.197	5.00	0.197	ug/L	08.29.18 13.08	E8	1
tert-Butylbenzene	98-06-6	<0.177	5.00	0.177	ug/L	08.29.18 13.08	E8	1
Tetrachloroethylene	127-18-4	**5.76**	5.00	0.347	ug/L	08.29.18 13.08		1
Toluene	108-88-3	<0.500	5.00	0.500	ug/L	08.29.18 13.08	E8	1
Total Trihalomethane		**0.490**	5.00	0.107	ug/L	08.29.18 13.08	E4	1
Total Xylenes	1330-20-7	<0.500	5.00	0.500	ug/L	08.29.18 13.08	E8	1
trans-1,2-dichloroethene	156-60-5	<0.167	5.00	0.167	ug/L	08.29.18 13.08	E8	1
Trichloroethene	79-01-6	**263**	50.0	2.18	ug/L	08.29.18 14.42	D2	10
Trichlorofluoromethane	75-69-4	<0.191	5.00	0.191	ug/L	08.29.18 13.08	E8	1
Vinyl Acetate	108-05-4	<0.583	50.0	0.583	ug/L	08.29.18 13.08	E8	1
Vinyl Chloride	75-01-4	<0.232	2.00	0.232	ug/L	08.29.18 13.08	E8	1
trans-1,3-dichloropropene	10061-02-6	<0.198	5.00	0.198	ug/L	08.29.18 13.08	E8	1
1,1,2-Trichloro-1,2,2-Trifluoroethane	76-13-1	<0.175	10.0	0.175	ug/L	08.29.18 13.08	E8	1

Certificate of Analytical Results 595904

AMEC Foster Wheeler, Phoenix, AZ

Cave Creek Landfill

Sample Id: **DUP02-081518** Matrix: Water Date Received:08.15.18 17.25
Lab Sample Id: 595904-010 Date Collected: 08.15.18 11.10

Analytical Method: VOCs by SW 8260B Prep Method: SW5030C
Tech: SAD % Solids:
Analyst: SAD Date Prep: 08.29.18 10.38
Seq Number: 3061633 SUB: AZ0765

Dilution Analysis:
Seq#: 3061633 Date Analyzed: 08/29/18 14:42 Date Prep: 08/29/18 10:42

Parameter	Cas Number	Result	RL	MDL	Units	Analysis Date	Flag	Dil
1,3-Butadiene	106-99-0	<2.52	5.00	2.52	ug/L	08.29.18 13.08	E8	1
Cyclohexane *	110-82-7	<0.309	5.00	0.309	ug/L	08.29.18 13.08	E8	1
Dicyclopentadiene	77-73-6	<0.0540	5.00	0.0540	ug/L	08.29.18 13.08	E8	1
Methylcyclohexane	108-87-2	<0.228	10.0	0.228	ug/L	08.29.18 13.08	E8	1
n-Hexane	110-54-3	<5.00	10.0	5.00	ug/L	08.29.18 13.08	E8	1
4-Ethyltoluene	622-96-8	Not Present			ug/L	08.29.18 13.08	T4E8	1
Propene	115-07-1	Not Present			ug/L	08.29.18 13.08	T4E8	1

Surrogate	% Recovery	Units	Limits	Analysis Date	Flag
Dibromofluoromethane	96	%	75-131	08.29.18 13.08	
1,2-Dichloroethane-D4	93	%	63-144	08.29.18 13.08	
Toluene-D8	104	%	80-117	08.29.18 13.08	
4-Bromofluorobenzene	100	%	74-124	08.29.18 13.08	

Certificate of Analytical Results 595904

AMEC Foster Wheeler, Phoenix, AZ

Cave Creek Landfill

Sample Id: **MW2-714-081518**
Lab Sample Id: 595904-011

Matrix: Water
Date Collected: 08.15.18 09.00

Date Received: 08.15.18 17.25

Analytical Method: PAHs by 8270C SIM
Tech: MGP
Analyst: EKL
Seq Number: 3060769

Date Prep: 08.20.18 09.09

Prep Method: SW3510C
% Solids:

SUB: AZ0765

Parameter	Cas Number	Result	RL	MDL	Units	Analysis Date	Flag	Dil
Naphthalene	91-20-3	**0.0519**	0.500	0.00451	ug/L	08.20.18 19.09	E4	1

Surrogate	% Recovery	Units	Limits	Analysis Date	Flag
Nitrobenzene-d5	83	%	41-128	08.20.18 19.09	
2-Fluorobiphenyl	92	%	55-135	08.20.18 19.09	
Terphenyl-D14	115	%	54-131	08.20.18 19.09	

Certificate of Analytical Results 595904

AMEC Foster Wheeler, Phoenix, AZ

Cave Creek Landfill

Sample Id: **MW3-714-081318**
Lab Sample Id: 595904-012

Matrix: Water
Date Collected: 08.13.18 12.30

Date Received:08.15.18 17.25

Analytical Method: PAHs by 8270C SIM
Tech: MGP
Analyst: EKL
Seq Number: 3060769

Date Prep: 08.20.18 09.12

Prep Method: SW3510C
% Solids:

SUB: AZ0765

Parameter	Cas Number	Result	RL	MDL	Units	Analysis Date	Flag	Dil
Naphthalene	91-20-3	**0.0487**	0.500	0.00451	ug/L	08.20.18 19.28	E4	1

Surrogate	% Recovery	Units	Limits	Analysis Date	Flag
Nitrobenzene-d5	61	%	41-128	08.20.18 19.28	
2-Fluorobiphenyl	61	%	55-135	08.20.18 19.28	
Terphenyl-D14	88	%	54-131	08.20.18 19.28	

Certificate of Analytical Results 595904

AMEC Foster Wheeler, Phoenix, AZ

Cave Creek Landfill

Sample Id: **MW4-708-081318**
Lab Sample Id: 595904-013

Matrix: Water
Date Collected: 08.13.18 09.00

Date Received:08.15.18 17.25

Analytical Method: PAHs by 8270C SIM
Tech: MGP
Analyst: EKL
Seq Number: 3060769

Date Prep: 08.20.18 09.15

Prep Method: SW3510C
% Solids:

SUB: AZ0765

Parameter	Cas Number	Result	RL	MDL	Units	Analysis Date	Flag	Dil
Naphthalene	91-20-3	**0.0497**	0.500	0.00451	ug/L	08.20.18 19.46	E4	1

Surrogate	% Recovery	Units	Limits	Analysis Date	Flag
Nitrobenzene-d5	81	%	41-128	08.20.18 19.46	
2-Fluorobiphenyl	89	%	55-135	08.20.18 19.46	
Terphenyl-D14	112	%	54-131	08.20.18 19.46	

Certificate of Analytical Results 595904

AMEC Foster Wheeler, Phoenix, AZ

Cave Creek Landfill

Sample Id: **MW5-704-081418**
Lab Sample Id: 595904-014

Matrix: Water
Date Collected: 08.14.18 10.45

Date Received: 08.15.18 17.25

Analytical Method: PAHs by 8270C SIM
Tech: MGP
Analyst: EKL
Seq Number: 3060769

Date Prep: 08.20.18 09.18

Prep Method: SW3510C
% Solids:

SUB: AZ0765

Parameter	Cas Number	Result	RL	MDL	Units	Analysis Date	Flag	Dil
Naphthalene	91-20-3	**0.0340**	0.500	0.00451	ug/L	08.20.18 20.05	E4	1

Surrogate	% Recovery	Units	Limits	Analysis Date	Flag
Nitrobenzene-d5	91	%	41-128	08.20.18 20.05	
2-Fluorobiphenyl	101	%	55-135	08.20.18 20.05	
Terphenyl-D14	121	%	54-131	08.20.18 20.05	

Certificate of Analytical Results 595904

AMEC Foster Wheeler, Phoenix, AZ

Cave Creek Landfill

Sample Id: **MW6-720-081318**
Lab Sample Id: 595904-015

Matrix: Water
Date Collected: 08.13.18 11.00

Date Received:08.15.18 17.25

Analytical Method: PAHs by 8270C SIM
Tech: MGP
Analyst: EKL
Seq Number: 3060769

Date Prep: 08.20.18 09.21

Prep Method: SW3510C
% Solids:

SUB: AZ0765

Parameter	Cas Number	Result	RL	MDL	Units	Analysis Date	Flag	Dil
Naphthalene	91-20-3	**0.0353**	0.500	0.00451	ug/L	08.20.18 20.23	E4	1

Surrogate	% Recovery	Units	Limits	Analysis Date	Flag
Nitrobenzene-d5	86	%	41-128	08.20.18 20.23	
2-Fluorobiphenyl	95	%	55-135	08.20.18 20.23	
Terphenyl-D14	116	%	54-131	08.20.18 20.23	

Certificate of Analytical Results 595904

AMEC Foster Wheeler, Phoenix, AZ

Cave Creek Landfill

Sample Id: **MW7-718-081318**
Lab Sample Id: 595904-016

Matrix: Water
Date Collected: 08.13.18 10.00

Date Received:08.15.18 17.25

Analytical Method: PAHs by 8270C SIM
Tech: MGP
Analyst: EKL
Seq Number: 3060769

Date Prep: 08.20.18 09.24

Prep Method: SW3510C
% Solids:

SUB: AZ0765

Parameter	Cas Number	Result	RL	MDL	Units	Analysis Date	Flag	Dil
Naphthalene	91-20-3	**0.0257**	0.500	0.00451	ug/L	08.20.18 20.42	E4	1

Surrogate	% Recovery	Units	Limits	Analysis Date	Flag
Nitrobenzene-d5	85	%	41-128	08.20.18 20.42	
2-Fluorobiphenyl	94	%	55-135	08.20.18 20.42	
Terphenyl-D14	115	%	54-131	08.20.18 20.42	

Certificate of Analytical Results 595904

AMEC Foster Wheeler, Phoenix, AZ

Cave Creek Landfill

Sample Id: **MW8-742-081418**
Lab Sample Id: 595904-017

Matrix: Water
Date Collected: 08.14.18 13.00

Date Received:08.15.18 17.25

Analytical Method: PAHs by 8270C SIM
Tech: MGP
Analyst: EKL
Seq Number: 3060769

Date Prep: 08.20.18 09.27

Prep Method: SW3510C
% Solids:

SUB: AZ0765

Parameter	Cas Number	Result	RL	MDL	Units	Analysis Date	Flag	Dil
Naphthalene	91-20-3	**0.0326**	0.500	0.00451	ug/L	08.20.18 21.00	E4	1

Surrogate	% Recovery	Units	Limits	Analysis Date	Flag
Nitrobenzene-d5	56	%	41-128	08.20.18 21.00	
2-Fluorobiphenyl	76	%	55-135	08.20.18 21.00	
Terphenyl-D14	104	%	54-131	08.20.18 21.00	

Certificate of Analytical Results 595904

AMEC Foster Wheeler, Phoenix, AZ

Cave Creek Landfill

Sample Id: **PW-734-081518**
Lab Sample Id: 595904-018

Matrix: Water
Date Collected: 08.15.18 14.30

Date Received: 08.15.18 17.25

Analytical Method: PAHs by 8270C SIM
Tech: MGP
Analyst: EKL
Seq Number: 3060769

Date Prep: 08.20.18 09.30

Prep Method: SW3510C
% Solids:

SUB: AZ0765

Parameter	Cas Number	Result	RL	MDL	Units	Analysis Date	Flag	Dil
Naphthalene	91-20-3	**0.0342**	0.498	0.00449	ug/L	08.20.18 21.19	E4	1

Surrogate	% Recovery	Units	Limits	Analysis Date	Flag
Nitrobenzene-d5	84	%	41-128	08.20.18 21.19	
2-Fluorobiphenyl	94	%	55-135	08.20.18 21.19	
Terphenyl-D14	114	%	54-131	08.20.18 21.19	

Certificate of Analytical Results 595904

AMEC Foster Wheeler, Phoenix, AZ

Cave Creek Landfill

Sample Id: **DUP01-081418**
Lab Sample Id: 595904-019

Matrix: Water
Date Collected: 08.14.18 14.30

Date Received:08.15.18 17.25

Analytical Method: PAHs by 8270C SIM
Tech: MGP
Analyst: EKL
Seq Number: 3060769

Date Prep: 08.20.18 09.33

Prep Method: SW3510C
% Solids:

SUB: AZ0765

Parameter	Cas Number	Result	RL	MDL	Units	Analysis Date	Flag	Dil
Naphthalene	91-20-3	**0.0393**	0.500	0.00451	ug/L	08.20.18 21.37	E4	1

Surrogate	% Recovery	Units	Limits	Analysis Date	Flag
Nitrobenzene-d5	82	%	41-128	08.20.18 21.37	
2-Fluorobiphenyl	92	%	55-135	08.20.18 21.37	
Terphenyl-D14	107	%	54-131	08.20.18 21.37	

Certificate of Analytical Results 595904

AMEC Foster Wheeler, Phoenix, AZ

Cave Creek Landfill

Sample Id: **Trip Blank-081518** Matrix: Water Date Received:08.15.18 17.25
Lab Sample Id: 595904-020 Date Collected: 08.15.18 14.30

Analytical Method: VOCs by SW 8260B Prep Method: SW5030C
Tech: SAD % Solids:
Analyst: SAD Date Prep: 08.29.18 10.48
Seq Number: 3061633 SUB: AZ0765

Parameter	Cas Number	Result	RL	MDL	Units	Analysis Date	Flag	Dil
1,1,1,2-Tetrachloroethane	630-20-6	<0.195	5.00	0.195	ug/L	08.29.18 15.28	E8	1
1,1,1-Trichloroethane	71-55-6	<0.130	5.00	0.130	ug/L	08.29.18 15.28	E8	1
1,1,2,2-Tetrachloroethane	79-34-5	<0.365	5.00	0.365	ug/L	08.29.18 15.28	E8	1
1,1,2-Trichloroethane	79-00-5	<0.272	5.00	0.272	ug/L	08.29.18 15.28	E8	1
1,1-Dichloroethane	75-34-3	<0.182	5.00	0.182	ug/L	08.29.18 15.28	E8	1
1,1-Dichloroethene	75-35-4	<0.178	5.00	0.178	ug/L	08.29.18 15.28	E8	1
1,1-Dichloropropene	563-58-6	<0.257	5.00	0.257	ug/L	08.29.18 15.28	E8	1
1,2,3-Trichlorobenzene	87-61-6	<2.00	5.00	2.00	ug/L	08.29.18 15.28	E8	1
1,2,3-Trichloropropane	96-18-4	<0.214	5.00	0.214	ug/L	08.29.18 15.28	E8	1
1,2,4-Trichlorobenzene	120-82-1	<2.00	5.00	2.00	ug/L	08.29.18 15.28	E8	1
1,2,4-Trimethylbenzene	95-63-6	<0.113	5.00	0.113	ug/L	08.29.18 15.28	E8	1
1,2-Dibromo-3-Chloropropane	96-12-8	<0.707	5.00	0.707	ug/L	08.29.18 15.28	E8	1
1,2-Dibromoethane	106-93-4	<0.380	5.00	0.380	ug/L	08.29.18 15.28	E8	1
1,2-Dichlorobenzene	95-50-1	<0.175	5.00	0.175	ug/L	08.29.18 15.28	E8	1
1,2-Dichloroethane	107-06-2	<0.283	5.00	0.283	ug/L	08.29.18 15.28	E8	1
1,2-Dichloropropane	78-87-5	<0.170	5.00	0.170	ug/L	08.29.18 15.28	E8	1
1,3,5-Trimethylbenzene	108-67-8	<0.178	5.00	0.178	ug/L	08.29.18 15.28	E8	1
1,3-Dichlorobenzene	541-73-1	<0.169	5.00	0.169	ug/L	08.29.18 15.28	E8	1
1,3-Dichloropropane	142-28-9	<0.199	5.00	0.199	ug/L	08.29.18 15.28	E8	1
1,4-Dichlorobenzene	106-46-7	<0.222	5.00	0.222	ug/L	08.29.18 15.28	E8	1
2,2-Dichloropropane	594-20-7	<0.154	5.00	0.154	ug/L	08.29.18 15.28	E8	1
2-Butanone	78-93-3	<1.32	50.0	1.32	ug/L	08.29.18 15.28	E8	1
2-Chlorotoluene	95-49-8	<0.293	5.00	0.293	ug/L	08.29.18 15.28	E8	1
2-Hexanone	591-78-6	<1.05	50.0	1.05	ug/L	08.29.18 15.28	E8	1
4-Chlorotoluene	106-43-4	<0.114	5.00	0.114	ug/L	08.29.18 15.28	E8	1
4-Methyl-2-Pentanone	108-10-1	<0.874	50.0	0.874	ug/L	08.29.18 15.28	E8	1
Acetone	67-64-1	<20.0	100	20.0	ug/L	08.29.18 15.28	E8	1
Benzene	71-43-2	<0.185	5.00	0.185	ug/L	08.29.18 15.28	E8	1
Bromobenzene	108-86-1	<0.258	5.00	0.258	ug/L	08.29.18 15.28	E8	1
Bromochloromethane	74-97-5	<0.328	5.00	0.328	ug/L	08.29.18 15.28	E8	1
Bromodichloromethane	75-27-4	<0.164	5.00	0.164	ug/L	08.29.18 15.28	E8	1
Bromoform	75-25-2	<0.348	5.00	0.348	ug/L	08.29.18 15.28	E8	1
Bromomethane	74-83-9	<0.127	5.00	0.127	ug/L	08.29.18 15.28	E8	1
Carbon Disulfide	75-15-0	<0.173	5.00	0.173	ug/L	08.29.18 15.28	E8	1
Carbon Tetrachloride	56-23-5	<0.243	5.00	0.243	ug/L	08.29.18 15.28	E8	1
Chlorobenzene	108-90-7	<0.110	5.00	0.110	ug/L	08.29.18 15.28	E8	1
Chloroethane	75-00-3	<0.190	10.0	0.190	ug/L	08.29.18 15.28	E8	1
Chloroform	67-66-3	<0.107	5.00	0.107	ug/L	08.29.18 15.28	E8	1

Certificate of Analytical Results 595904

AMEC Foster Wheeler, Phoenix, AZ

Cave Creek Landfill

Sample Id: **Trip Blank-081518** Matrix: Water Date Received:08.15.18 17.25
Lab Sample Id: 595904-020 Date Collected: 08.15.18 14.30

Analytical Method: VOCs by SW 8260B Prep Method: SW5030C
Tech: SAD % Solids:
Analyst: SAD Date Prep: 08.29.18 10.48
Seq Number: 3061633 SUB: AZ0765

Parameter	Cas Number	Result	RL	MDL	Units	Analysis Date	Flag	Dil
Chloromethane	74-87-3	<5.00	10.0	5.00	ug/L	08.29.18 15.28	E8	1
cis-1,2-Dichloroethene	156-59-2	<0.162	5.00	0.162	ug/L	08.29.18 15.28	E8	1
cis-1,3-Dichloropropene	10061-01-5	<0.126	5.00	0.126	ug/L	08.29.18 15.28	E8	1
Dibromochloromethane	124-48-1	<0.212	5.00	0.212	ug/L	08.29.18 15.28	E8	1
Dibromomethane	74-95-3	<0.186	5.00	0.186	ug/L	08.29.18 15.28	E8	1
Dichlorodifluoromethane	75-71-8	<0.148	5.00	0.148	ug/L	08.29.18 15.28	E8	1
Ethylbenzene	100-41-4	<0.190	5.00	0.190	ug/L	08.29.18 15.28	E8	1
Hexachlorobutadiene	87-68-3	<2.00	5.00	2.00	ug/L	08.29.18 15.28	E8	1
Iodomethane (Methyl Iodide)	74-88-4	<0.170	20.0	0.170	ug/L	08.29.18 15.28	E8	1
isopropylbenzene	98-82-8	<0.218	5.00	0.218	ug/L	08.29.18 15.28	E8	1
m,p-Xylenes	179601-23-1	<1.00	10.0	1.00	ug/L	08.29.18 15.28	E8	1
Methylene Chloride	75-09-2	<2.00	5.00	2.00	ug/L	08.29.18 15.28	E8	1
MTBE	1634-04-4	<0.500	5.00	0.500	ug/L	08.29.18 15.28	E8	1
Naphthalene	91-20-3	<2.00	10.0	2.00	ug/L	08.29.18 15.28	E8	1
n-Butylbenzene	104-51-8	<2.00	5.00	2.00	ug/L	08.29.18 15.28	E8	1
n-Propylbenzene	103-65-1	<0.173	5.00	0.173	ug/L	08.29.18 15.28	E8	1
o-Xylene	95-47-6	<0.500	5.00	0.500	ug/L	08.29.18 15.28	E8	1
p-Cymene (p-Isopropyltoluene)	99-87-6	<0.150	5.00	0.150	ug/L	08.29.18 15.28	E8	1
Sec-Butylbenzene	135-98-8	<0.124	5.00	0.124	ug/L	08.29.18 15.28	E8	1
Styrene	100-42-5	<0.197	5.00	0.197	ug/L	08.29.18 15.28	E8	1
tert-Butylbenzene	98-06-6	<0.177	5.00	0.177	ug/L	08.29.18 15.28	E8	1
Tetrachloroethylene	127-18-4	<0.347	5.00	0.347	ug/L	08.29.18 15.28	E8	1
Toluene	108-88-3	<0.500	5.00	0.500	ug/L	08.29.18 15.28	E8	1
Total Trihalomethane		<0.107	5.00	0.107	ug/L	08.29.18 15.28	E8	1
Total Xylenes	1330-20-7	<0.500	5.00	0.500	ug/L	08.29.18 15.28	E8	1
trans-1,2-dichloroethene	156-60-5	<0.167	5.00	0.167	ug/L	08.29.18 15.28	E8	1
Trichloroethene	79-01-6	<0.218	5.00	0.218	ug/L	08.29.18 15.28	E8	1
Trichlorofluoromethane	75-69-4	<0.191	5.00	0.191	ug/L	08.29.18 15.28	E8	1
Vinyl Acetate	108-05-4	<0.583	50.0	0.583	ug/L	08.29.18 15.28	E8	1
Vinyl Chloride	75-01-4	<0.232	2.00	0.232	ug/L	08.29.18 15.28	E8	1
trans-1,3-dichloropropene	10061-02-6	<0.198	5.00	0.198	ug/L	08.29.18 15.28	E8	1
1,1,2-Trichloro-1,2,2-Trifluoroethane	76-13-1	<0.175	10.0	0.175	ug/L	08.29.18 15.28	E8	1
1,3-Butadiene	106-99-0	<2.52	5.00	2.52	ug/L	08.29.18 15.28	E8	1
Cyclohexane *	110-82-7	<0.309	5.00	0.309	ug/L	08.29.18 15.28	E8	1
Dicyclopentadiene	77-73-6	<0.0540	5.00	0.0540	ug/L	08.29.18 15.28	E8	1
Methylcyclohexane	108-87-2	<0.228	10.0	0.228	ug/L	08.29.18 15.28	E8	1
n-Hexane	110-54-3	<5.00	10.0	5.00	ug/L	08.29.18 15.28	E8	1
4-Ethyltoluene	622-96-8	Not Present			ug/L	08.29.18 15.28	T4E8	1

Certificate of Analytical Results 595904

AMEC Foster Wheeler, Phoenix, AZ

Cave Creek Landfill

Sample Id: **Trip Blank-081518**
Lab Sample Id: 595904-020

Matrix: Water
Date Collected: 08.15.18 14.30

Date Received: 08.15.18 17.25

Analytical Method: VOCs by SW 8260B
Tech: SAD
Analyst: SAD
Seq Number: 3061633

Date Prep: 08.29.18 10.48

Prep Method: SW5030C
% Solids:

SUB: AZ0765

Parameter	Cas Number	Result	RL	MDL	Units	Analysis Date	Flag	Dil
Propene	115-07-1	Not Present			ug/L	08.29.18 15.28	T4E8	1

Surrogate	% Recovery	Units	Limits	Analysis Date	Flag
Dibromofluoromethane	96	%	75-131	08.29.18 15.28	
1,2-Dichloroethane-D4	104	%	63-144	08.29.18 15.28	
Toluene-D8	105	%	80-117	08.29.18 15.28	
4-Bromofluorobenzene	100	%	74-124	08.29.18 15.28	

Certificate of Analytical Results 595904

AMEC Foster Wheeler, Phoenix, AZ

Cave Creek Landfill

Sample Id: **PDB Blank-081518** Matrix: Water Date Received:08.15.18 17.25
Lab Sample Id: 595904-021 Date Collected: 08.15.18 14.30

Analytical Method: VOCs by SW 8260B Prep Method: SW5030C
Tech: SAD % Solids:
Analyst: SAD Date Prep: 08.29.18 10.48
Seq Number: 3061633 SUB: AZ0765

Parameter	Cas Number	Result	RL	MDL	Units	Analysis Date	Flag	Dil
1,1,1,2-Tetrachloroethane	630-20-6	<0.195	5.00	0.195	ug/L	08.29.18 15.50	E8	1
1,1,1-Trichloroethane	71-55-6	<0.130	5.00	0.130	ug/L	08.29.18 15.50	E8	1
1,1,2,2-Tetrachloroethane	79-34-5	<0.365	5.00	0.365	ug/L	08.29.18 15.50	E8	1
1,1,2-Trichloroethane	79-00-5	<0.272	5.00	0.272	ug/L	08.29.18 15.50	E8	1
1,1-Dichloroethane	75-34-3	<0.182	5.00	0.182	ug/L	08.29.18 15.50	E8	1
1,1-Dichloroethene	75-35-4	<0.178	5.00	0.178	ug/L	08.29.18 15.50	E8	1
1,1-Dichloropropene	563-58-6	<0.257	5.00	0.257	ug/L	08.29.18 15.50	E8	1
1,2,3-Trichlorobenzene	87-61-6	<2.00	5.00	2.00	ug/L	08.29.18 15.50	E8	1
1,2,3-Trichloropropane	96-18-4	<0.214	5.00	0.214	ug/L	08.29.18 15.50	E8	1
1,2,4-Trichlorobenzene	120-82-1	<2.00	5.00	2.00	ug/L	08.29.18 15.50	E8	1
1,2,4-Trimethylbenzene	95-63-6	<0.113	5.00	0.113	ug/L	08.29.18 15.50	E8	1
1,2-Dibromo-3-Chloropropane	96-12-8	<0.707	5.00	0.707	ug/L	08.29.18 15.50	E8	1
1,2-Dibromoethane	106-93-4	<0.380	5.00	0.380	ug/L	08.29.18 15.50	E8	1
1,2-Dichlorobenzene	95-50-1	<0.175	5.00	0.175	ug/L	08.29.18 15.50	E8	1
1,2-Dichloroethane	107-06-2	<0.283	5.00	0.283	ug/L	08.29.18 15.50	E8	1
1,2-Dichloropropane	78-87-5	<0.170	5.00	0.170	ug/L	08.29.18 15.50	E8	1
1,3,5-Trimethylbenzene	108-67-8	<0.178	5.00	0.178	ug/L	08.29.18 15.50	E8	1
1,3-Dichlorobenzene	541-73-1	<0.169	5.00	0.169	ug/L	08.29.18 15.50	E8	1
1,3-Dichloropropane	142-28-9	<0.199	5.00	0.199	ug/L	08.29.18 15.50	E8	1
1,4-Dichlorobenzene	106-46-7	<0.222	5.00	0.222	ug/L	08.29.18 15.50	E8	1
2,2-Dichloropropane	594-20-7	<0.154	5.00	0.154	ug/L	08.29.18 15.50	E8	1
2-Butanone	78-93-3	<1.32	50.0	1.32	ug/L	08.29.18 15.50	E8	1
2-Chlorotoluene	95-49-8	<0.293	5.00	0.293	ug/L	08.29.18 15.50	E8	1
2-Hexanone	591-78-6	<1.05	50.0	1.05	ug/L	08.29.18 15.50	E8	1
4-Chlorotoluene	106-43-4	<0.114	5.00	0.114	ug/L	08.29.18 15.50	E8	1
4-Methyl-2-Pentanone	108-10-1	<0.874	50.0	0.874	ug/L	08.29.18 15.50	E8	1
Acetone	67-64-1	<20.0	100	20.0	ug/L	08.29.18 15.50	E8	1
Benzene	71-43-2	<0.185	5.00	0.185	ug/L	08.29.18 15.50	E8	1
Bromobenzene	108-86-1	<0.258	5.00	0.258	ug/L	08.29.18 15.50	E8	1
Bromochloromethane	74-97-5	<0.328	5.00	0.328	ug/L	08.29.18 15.50	E8	1
Bromodichloromethane	75-27-4	<0.164	5.00	0.164	ug/L	08.29.18 15.50	E8	1
Bromoform	75-25-2	<0.348	5.00	0.348	ug/L	08.29.18 15.50	E8	1
Bromomethane	74-83-9	<0.127	5.00	0.127	ug/L	08.29.18 15.50	E8	1
Carbon Disulfide	75-15-0	<0.173	5.00	0.173	ug/L	08.29.18 15.50	E8	1
Carbon Tetrachloride	56-23-5	<0.243	5.00	0.243	ug/L	08.29.18 15.50	E8	1
Chlorobenzene	108-90-7	<0.110	5.00	0.110	ug/L	08.29.18 15.50	E8	1
Chloroethane	75-00-3	<0.190	10.0	0.190	ug/L	08.29.18 15.50	E8	1
Chloroform	67-66-3	<0.107	5.00	0.107	ug/L	08.29.18 15.50	E8	1

Certificate of Analytical Results 595904

AMEC Foster Wheeler, Phoenix, AZ

Cave Creek Landfill

Sample Id: **PDB Blank-081518** Matrix: Water Date Received:08.15.18 17.25
Lab Sample Id: 595904-021 Date Collected: 08.15.18 14.30

Analytical Method: VOCs by SW 8260B Prep Method: SW5030C
Tech: SAD % Solids:
Analyst: SAD Date Prep: 08.29.18 10.48
Seq Number: 3061633 SUB: AZ0765

Parameter	Cas Number	Result	RL	MDL	Units	Analysis Date	Flag	Dil
Chloromethane	74-87-3	<5.00	10.0	5.00	ug/L	08.29.18 15.50	E8	1
cis-1,2-Dichloroethene	156-59-2	<0.162	5.00	0.162	ug/L	08.29.18 15.50	E8	1
cis-1,3-Dichloropropene	10061-01-5	<0.126	5.00	0.126	ug/L	08.29.18 15.50	E8	1
Dibromochloromethane	124-48-1	<0.212	5.00	0.212	ug/L	08.29.18 15.50	E8	1
Dibromomethane	74-95-3	<0.186	5.00	0.186	ug/L	08.29.18 15.50	E8	1
Dichlorodifluoromethane	75-71-8	<0.148	5.00	0.148	ug/L	08.29.18 15.50	E8	1
Ethylbenzene	100-41-4	<0.190	5.00	0.190	ug/L	08.29.18 15.50	E8	1
Hexachlorobutadiene	87-68-3	<2.00	5.00	2.00	ug/L	08.29.18 15.50	E8	1
Iodomethane (Methyl Iodide)	74-88-4	<0.170	20.0	0.170	ug/L	08.29.18 15.50	E8	1
isopropylbenzene	98-82-8	<0.218	5.00	0.218	ug/L	08.29.18 15.50	E8	1
m,p-Xylenes	179601-23-1	<1.00	10.0	1.00	ug/L	08.29.18 15.50	E8	1
Methylene Chloride	75-09-2	<2.00	5.00	2.00	ug/L	08.29.18 15.50	E8	1
MTBE	1634-04-4	<0.500	5.00	0.500	ug/L	08.29.18 15.50	E8	1
Naphthalene	91-20-3	<2.00	10.0	2.00	ug/L	08.29.18 15.50	E8	1
n-Butylbenzene	104-51-8	<2.00	5.00	2.00	ug/L	08.29.18 15.50	E8	1
n-Propylbenzene	103-65-1	<0.173	5.00	0.173	ug/L	08.29.18 15.50	E8	1
o-Xylene	95-47-6	<0.500	5.00	0.500	ug/L	08.29.18 15.50	E8	1
p-Cymene (p-Isopropyltoluene)	99-87-6	<0.150	5.00	0.150	ug/L	08.29.18 15.50	E8	1
Sec-Butylbenzene	135-98-8	<0.124	5.00	0.124	ug/L	08.29.18 15.50	E8	1
Styrene	100-42-5	<0.197	5.00	0.197	ug/L	08.29.18 15.50	E8	1
tert-Butylbenzene	98-06-6	<0.177	5.00	0.177	ug/L	08.29.18 15.50	E8	1
Tetrachloroethylene	127-18-4	<0.347	5.00	0.347	ug/L	08.29.18 15.50	E8	1
Toluene	108-88-3	<0.500	5.00	0.500	ug/L	08.29.18 15.50	E8	1
Total Trihalomethane		<0.107	5.00	0.107	ug/L	08.29.18 15.50	E8	1
Total Xylenes	1330-20-7	<0.500	5.00	0.500	ug/L	08.29.18 15.50	E8	1
trans-1,2-dichloroethene	156-60-5	<0.167	5.00	0.167	ug/L	08.29.18 15.50	E8	1
Trichloroethene	79-01-6	<0.218	5.00	0.218	ug/L	08.29.18 15.50	E8	1
Trichlorofluoromethane	75-69-4	<0.191	5.00	0.191	ug/L	08.29.18 15.50	E8	1
Vinyl Acetate	108-05-4	<0.583	50.0	0.583	ug/L	08.29.18 15.50	E8	1
Vinyl Chloride	75-01-4	<0.232	2.00	0.232	ug/L	08.29.18 15.50	E8	1
trans-1,3-dichloropropene	10061-02-6	<0.198	5.00	0.198	ug/L	08.29.18 15.50	E8	1
1,1,2-Trichloro-1,2,2-Trifluoroethane	76-13-1	<0.175	10.0	0.175	ug/L	08.29.18 15.50	E8	1
1,3-Butadiene	106-99-0	<2.52	5.00	2.52	ug/L	08.29.18 15.50	E8	1
Cyclohexane *	110-82-7	<0.309	5.00	0.309	ug/L	08.29.18 15.50	E8	1
Dicyclopentadiene	77-73-6	<0.0540	5.00	0.0540	ug/L	08.29.18 15.50	E8	1
Methylcyclohexane	108-87-2	<0.228	10.0	0.228	ug/L	08.29.18 15.50	E8	1
n-Hexane	110-54-3	<5.00	10.0	5.00	ug/L	08.29.18 15.50	E8	1
4-Ethyltoluene	622-96-8	Not Present			ug/L	08.29.18 15.50	T4E8	1

Certificate of Analytical Results 595904

AMEC Foster Wheeler, Phoenix, AZ

Cave Creek Landfill

Sample Id: **PDB Blank-081518**
Lab Sample Id: 595904-021

Matrix: Water
Date Collected: 08.15.18 14.30

Date Received:08.15.18 17.25

Analytical Method: VOCs by SW 8260B
Tech: SAD
Analyst: SAD
Seq Number: 3061633

Date Prep: 08.29.18 10.48

Prep Method: SW5030C
% Solids:

SUB: AZ0765

Parameter	Cas Number	Result	RL	MDL	Units	Analysis Date	Flag	Dil
Propene	115-07-1	Not Present			ug/L	08.29.18 15.50	T4E8	1

Surrogate	% Recovery	Units	Limits	Analysis Date	Flag
Dibromofluoromethane	97	%	75-131	08.29.18 15.50	
1,2-Dichloroethane-D4	103	%	63-144	08.29.18 15.50	
Toluene-D8	103	%	80-117	08.29.18 15.50	
4-Bromofluorobenzene	98	%	74-124	08.29.18 15.50	

QC Summary 595904

AMEC Foster Wheeler

Cave Creek Landfill

Analytical Method: VOCs by SW 8260B Prep Method: SW5030C

Seq Number: 3061308 Matrix: Water Date Prep: 08.27.18

MB Sample Id: 7661196-1-BLK LCS Sample Id: 7661196-1-BKS LCSD Sample Id: 7661196-1-BSD

Parameter	MB Result	Spike Amount	LCS Result	LCS %Rec	LCSD Result	LCSD %Rec	Limits	%RPD	RPD Limit	Units	Analysis Date	Flag
1,1,1,2-Tetrachloroethane	<0.500	20.0	20.4	102	19.2	96	70-130	6	20	ug/L	08.27.18 13:13	
1,1,1-Trichloroethane	<0.500	20.0	19.5	98	19.7	99	70-130	1	20	ug/L	08.27.18 13:13	
1,1,2,2-Tetrachloroethane	<0.500	20.0	19.4	97	22.2	111	70-130	13	20	ug/L	08.27.18 13:13	
1,1,2-Trichloroethane	<0.500	20.0	19.2	96	21.8	109	70-130	13	20	ug/L	08.27.18 13:13	
1,1-Dichloroethane	<0.500	20.0	21.4	107	19.4	97	70-130	10	20	ug/L	08.27.18 13:13	
1,1-Dichloroethene	<0.500	20.0	21.0	105	18.5	93	70-130	13	21	ug/L	08.27.18 13:13	
1,1-Dichloropropene	<1.00	20.0	18.9	95	18.9	95	70-130	0	20	ug/L	08.27.18 13:13	
1,2,3-Trichlorobenzene	<5.00	20.0	19.3	97	17.8	89	70-130	8	27	ug/L	08.27.18 13:13	
1,2,3-Trichloropropane	<1.00	20.0	19.6	98	20.3	102	70-130	4	20	ug/L	08.27.18 13:13	
1,2,4-Trichlorobenzene	<5.00	20.0	19.2	96	17.8	89	70-130	8	20	ug/L	08.27.18 13:13	
1,2,4-Trimethylbenzene	<2.00	20.0	19.5	98	21.1	106	70-130	8	20	ug/L	08.27.18 13:13	
1,2-Dibromo-3-Chloropropane	<2.00	20.0	16.3	82	18.3	92	70-130	12	21	ug/L	08.27.18 13:13	
1,2-Dibromoethane	<0.500	20.0	19.7	99	21.0	105	70-130	6	20	ug/L	08.27.18 13:13	
1,2-Dichlorobenzene	<1.50	20.0	19.5	98	19.4	97	70-130	1	20	ug/L	08.27.18 13:13	
1,2-Dichloroethane	<0.500	20.0	18.3	92	19.3	97	70-130	5	20	ug/L	08.27.18 13:13	
1,2-Dichloropropane	<0.500	20.0	22.7	114	24.3	122	70-130	7	20	ug/L	08.27.18 13:13	
1,3,5-Trimethylbenzene	<1.50	20.0	19.4	97	20.9	105	70-130	7	20	ug/L	08.27.18 13:13	
1,3-Dichlorobenzene	<1.50	20.0	19.3	97	19.0	95	70-130	2	20	ug/L	08.27.18 13:13	
1,3-Dichloropropane	<1.00	20.0	19.4	97	22.8	114	70-130	16	20	ug/L	08.27.18 13:13	
1,4-Dichlorobenzene	<1.50	20.0	19.4	97	19.7	99	70-130	2	20	ug/L	08.27.18 13:13	
2,2-Dichloropropane	<0.500	20.0	20.6	103	20.2	101	70-130	2	24	ug/L	08.27.18 13:13	
2-Butanone	<5.00	40.0	43.4	109	41.8	105	51-116	4	27	ug/L	08.27.18 13:13	
2-Chlorotoluene	<1.50	20.0	19.6	98	22.3	112	70-130	13	20	ug/L	08.27.18 13:13	
2-Hexanone	<5.00	40.0	31.8	80	43.3	108	59-101	31	20	ug/L	08.27.18 13:13	L1R2
4-Chlorotoluene	<2.00	20.0	20.0	100	22.4	112	70-130	11	28	ug/L	08.27.18 13:13	
4-Methyl-2-Pentanone	<5.00	40.0	44.6	112	53.5	134	57-106	18	21	ug/L	08.27.18 13:13	L1
Acetone	<20.0	40.0	37.9	95	39.1	98	47-128	3	28	ug/L	08.27.18 13:13	
Benzene	<0.500	20.0	20.1	101	20.5	103	70-130	2	20	ug/L	08.27.18 13:13	
Bromobenzene	<1.50	20.0	19.6	98	18.0	90	70-130	9	20	ug/L	08.27.18 13:13	
Bromochloromethane	<0.500	20.0	18.8	94	19.5	98	70-130	4	24	ug/L	08.27.18 13:13	
Bromodichloromethane	<0.500	20.0	21.3	107	23.2	116	70-130	9	20	ug/L	08.27.18 13:13	
Bromoform	<1.00	20.0	20.7	104	19.8	99	66-132	4	20	ug/L	08.27.18 13:13	
Bromomethane	<5.00	20.0	17.2	86	15.8	79	63-130	8	25	ug/L	08.27.18 13:13	
Carbon Disulfide	<0.500	20.0	19.9	100	18.4	92	70-130	8	22	ug/L	08.27.18 13:13	
Carbon Tetrachloride	<0.500	20.0	18.9	95	19.2	96	70-130	2	21	ug/L	08.27.18 13:13	
Chlorobenzene	<0.500	20.0	18.8	94	19.7	99	70-130	5	20	ug/L	08.27.18 13:13	
Chloroethane	<4.00	20.0	16.7	84	16.3	82	70-140	2	24	ug/L	08.27.18 13:13	
Chloroform	1.94	20.0	19.0	95	19.1	96	70-130	1	24	ug/L	08.27.18 13:13	
Chloromethane	<5.00	20.0	21.3	107	24.7	124	25-130	15	26	ug/L	08.27.18 13:13	
cis-1,2-Dichloroethene	<0.500	20.0	20.0	100	19.6	98	70-130	2	24	ug/L	08.27.18 13:13	
cis-1,3-Dichloropropene	<1.00	20.0	23.0	115	25.8	129	70-130	11	20	ug/L	08.27.18 13:13	
Dibromochloromethane	<0.500	20.0	17.6	88	17.3	87	70-130	2	20	ug/L	08.27.18 13:13	
Dibromomethane	<0.500	20.0	19.6	98	21.7	109	70-130	10	23	ug/L	08.27.18 13:13	
Dichlorodifluoromethane	<2.00	20.0	16.9	85	18.2	91	25-136	7	27	ug/L	08.27.18 13:13	
Ethylbenzene	<2.00	20.0	18.7	94	20.6	103	70-130	10	20	ug/L	08.27.18 13:13	
Hexachlorobutadiene	<5.00	20.0	20.1	101	17.0	85	63-139	17	22	ug/L	08.27.18 13:13	
Iodomethane (Methyl Iodide)	<2.00	20.0	14.4	72	14.7	74	70-130	2	22	ug/L	08.27.18 13:13	
isopropylbenzene	<2.50	20.0	19.9	100	21.1	106	70-130	6	20	ug/L	08.27.18 13:13	
m,p-Xylenes	<2.00	40.0	37.9	95	40.4	101	70-130	6	20	ug/L	08.27.18 13:13	

MS/MSD Percent Recovery	[D] = 100*(C-A) / B	LCS = Laboratory Control Sample	MS = Matrix Spike
Relative Percent Difference	RPD = 200* | (C-E) / (C+E) |	A = Parent Result	B = Spike Added
LCS/LCSD Recovery	[D] = 100 * (C) / [B]	C = MS/LCS Result	D = MSD/LCSD % Rec
Log Difference	Log Diff. = Log(Sample Duplicate) - Log(Original Sample)	E = MSD/LCSD Result	

QC Summary 595904

AMEC Foster Wheeler

Cave Creek Landfill

Analytical Method: VOCs by SW 8260B Prep Method: SW5030C

Seq Number: 3061308 Matrix: Water Date Prep: 08.27.18

MB Sample Id: 7661196-1-BLK LCS Sample Id: 7661196-1-BKS LCSD Sample Id: 7661196-1-BSD

Parameter	MB Result	Spike Amount	LCS Result	LCS %Rec	LCSD Result	LCSD %Rec	Limits	%RPD	RPD Limit	Units	Analysis Date	Flag
Methylene Chloride	0.890	20.0	20.2	101	18.8	94	70-130	7	20	ug/L	08.27.18 13:13	
MTBE	<2.00	20.0	20.7	104	19.1	96	70-130	8	21	ug/L	08.27.18 13:13	
Naphthalene	<5.00	20.0	18.5	93	19.3	97	70-130	4	27	ug/L	08.27.18 13:13	
n-Butylbenzene	<2.50	20.0	19.3	97	22.0	110	70-130	13	20	ug/L	08.27.18 13:13	
n-Propylbenzene	<2.00	20.0	19.6	98	23.2	116	70-130	17	20	ug/L	08.27.18 13:13	
o-Xylene	<1.00	20.0	18.7	94	20.2	101	70-130	8	20	ug/L	08.27.18 13:13	
p-Cymene (p-Isopropyltoluene)	<1.50	20.0	19.1	96	20.0	100	70-130	5	20	ug/L	08.27.18 13:13	
Sec-Butylbenzene	<1.50	20.0	19.1	96	21.6	108	70-130	12	20	ug/L	08.27.18 13:13	
Styrene	<1.00	20.0	18.7	94	20.2	101	70-130	8	20	ug/L	08.27.18 13:13	
tert-Butylbenzene	<2.50	20.0	20.3	102	21.0	105	70-130	3	20	ug/L	08.27.18 13:13	
Tetrachloroethylene	<0.500	20.0	18.5	93	16.6	83	70-130	11	20	ug/L	08.27.18 13:13	
Toluene	<2.00	20.0	24.3	122	19.2	96	70-130	23	20	ug/L	08.27.18 13:13	R7
trans-1,2-dichloroethene	<0.500	20.0	21.5	108	18.9	95	70-130	13	21	ug/L	08.27.18 13:13	
Trichloroethene	<0.500	20.0	19.7	99	20.9	105	70-130	6	20	ug/L	08.27.18 13:13	
Trichlorofluoromethane	<2.00	20.0	16.1	81	18.2	91	70-130	12	22	ug/L	08.27.18 13:13	
Vinyl Acetate	<5.00	20.0	22.8	114	21.2	106	46-172	7	22	ug/L	08.27.18 13:13	
Vinyl Chloride	<0.500	20.0	19.6	98	21.2	106	41-132	8	25	ug/L	08.27.18 13:13	
trans-1,3-dichloropropene	<0.500	20.0	20.8	104	18.0	90	70-130	14	20	ug/L	08.27.18 13:13	
1,1,2-Trichloro-1,2,2-Trifluoroethane	<5.00	20.0	16.6	83	16.6	83	64-125	0	22	ug/L	08.27.18 13:13	
1,3-Butadiene	<5.00	20.0	21.7	109	22.8	114	58-134	5	20	ug/L	08.27.18 13:13	
Cyclohexane	<5.00	20.0	20.1	101	19.7	99	70-130	2	21	ug/L	08.27.18 13:13	
Dicyclopentadiene	<5.00	20.0	18.9	95	23.8	119	70-130	23	20	ug/L	08.27.18 13:13	R7
Methylcyclohexane	<5.00	20.0	20.7	104	22.2	111	70-130	7	20	ug/L	08.27.18 13:13	
n-Hexane	<5.00	20.0	21.1	106	18.7	94	67-130	12	20	ug/L	08.27.18 13:13	

Surrogate	MB %Rec	MB Flag	LCS %Rec	LCS Flag	LCSD %Rec	LCSD Flag	Limits	Units	Analysis Date
4-Bromofluorobenzene	94		78		93		74-124	%	08.27.18 13:13
Dibromofluoromethane	94		83		95		75-131	%	08.27.18 13:13
1,2-Dichloroethane-D4	84		71		82		63-144	%	08.27.18 13:13
Toluene-D8	98		80		99		80-117	%	08.27.18 13:13

MS/MSD Percent Recovery [D] = 100*(C-A) / B
Relative Percent Difference RPD = 200* | (C-E) / (C+E) |
LCS/LCSD Recovery [D] = 100 * (C) / [B]
Log Difference Log Diff. = Log(Sample Duplicate) - Log(Original Sample)

LCS = Laboratory Control Sample
A = Parent Result
C = MS/LCS Result
E = MSD/LCSD Result

MS = Matrix Spike
B = Spike Added
D = MSD/LCSD % Rec

QC Summary 595904

AMEC Foster Wheeler

Cave Creek Landfill

Analytical Method: VOCs by SW 8260B Prep Method: SW5030B

Seq Number: 3061633 Matrix: Water Date Prep: 08.29.18

MB Sample Id: 7661375-1-BLK LCS Sample Id: 7661375-1-BKS LCSD Sample Id: 7661375-1-BSD

Parameter	MB Result	Spike Amount	LCS Result	LCS %Rec	LCSD Result	LCSD %Rec	Limits	%RPD	RPD Limit	Units	Analysis Date	Flag
1,1,1,2-Tetrachloroethane	<5.00	50.0	45.0	90	47.7	95	78-131	6	25	ug/L	08.29.18 08:22	
1,1,1-Trichloroethane	<5.00	50.0	47.6	95	49.2	98	72-124	3	25	ug/L	08.29.18 08:22	
1,1,2,2-Tetrachloroethane	<5.00	50.0	48.2	96	49.1	98	80-133	2	25	ug/L	08.29.18 08:22	
1,1,2-Trichloroethane	<5.00	50.0	45.8	92	46.7	93	71-135	2	25	ug/L	08.29.18 08:22	
1,1-Dichloroethane	<5.00	50.0	45.6	91	47.1	94	75-125	3	25	ug/L	08.29.18 08:22	
1,1-Dichloroethene	<0.178	50.0	44.6	89	46.6	93	68-116	4	25	ug/L	08.29.18 08:22	
1,1-Dichloropropene	<5.00	50.0	44.8	90	46.6	93	69-124	4	25	ug/L	08.29.18 08:22	
1,2,3-Trichlorobenzene	<5.00	50.0	53.5	107	56.4	113	76-126	5	25	ug/L	08.29.18 08:22	
1,2,3-Trichloropropane	<5.00	50.0	46.6	93	49.8	100	75-134	7	25	ug/L	08.29.18 08:22	
1,2,4-Trichlorobenzene	<5.00	50.0	49.4	99	51.6	103	77-127	4	25	ug/L	08.29.18 08:22	
1,2,4-Trimethylbenzene	<5.00	50.0	47.3	95	49.0	98	79-132	4	25	ug/L	08.29.18 08:22	
1,2-Dibromo-3-Chloropropane	<5.00	50.0	49.4	99	51.7	103	62-134	5	25	ug/L	08.29.18 08:22	
1,2-Dibromoethane	<5.00	50.0	45.9	92	48.3	97	77-129	5	25	ug/L	08.29.18 08:22	
1,2-Dichlorobenzene	<5.00	50.0	45.7	91	48.2	96	81-123	5	25	ug/L	08.29.18 08:22	
1,2-Dichloroethane	<5.00	50.0	45.3	91	47.9	96	64-130	6	25	ug/L	08.29.18 08:22	
1,2-Dichloropropane	<5.00	50.0	45.0	90	48.5	97	72-127	7	25	ug/L	08.29.18 08:22	
1,3,5-Trimethylbenzene	<5.00	50.0	46.3	93	47.1	94	72-139	2	25	ug/L	08.29.18 08:22	
1,3-Dichlorobenzene	<5.00	50.0	45.4	91	48.7	97	82-126	7	25	ug/L	08.29.18 08:22	
1,3-Dichloropropane	<5.00	50.0	44.2	88	45.7	91	79-133	3	25	ug/L	08.29.18 08:22	
1,4-Dichlorobenzene	<5.00	50.0	45.8	92	47.7	95	80-119	4	25	ug/L	08.29.18 08:22	
2,2-Dichloropropane	<5.00	50.0	48.5	97	50.4	101	71-134	4	25	ug/L	08.29.18 08:22	
2-Butanone	<50.0	250	226	90	230	92	49-135	2	25	ug/L	08.29.18 08:22	
2-Chlorotoluene	<5.00	50.0	43.7	87	46.3	93	83-128	6	25	ug/L	08.29.18 08:22	
2-Hexanone	<1.05	250	247	99	250	100	56-134	1	25	ug/L	08.29.18 08:22	
4-Chlorotoluene	<5.00	50.0	47.4	95	50.3	101	81-125	6	25	ug/L	08.29.18 08:22	
4-Methyl-2-Pentanone	<0.874	250	235	94	244	98	63-127	4	25	ug/L	08.29.18 08:22	
Acetone	<20.0	250	249	100	268	107	40-142	7	25	ug/L	08.29.18 08:22	
Benzene	<5.00	50.0	44.3	89	46.5	93	68-123	5	25	ug/L	08.29.18 08:22	
Bromobenzene	<5.00	50.0	45.7	91	47.9	96	83-124	5	25	ug/L	08.29.18 08:22	
Bromochloromethane	<5.00	50.0	45.3	91	47.2	94	68-119	4	25	ug/L	08.29.18 08:22	
Bromodichloromethane	<5.00	50.0	45.7	91	49.3	99	72-132	8	25	ug/L	08.29.18 08:22	
Bromoform	<5.00	50.0	48.9	98	49.7	99	65-136	2	25	ug/L	08.29.18 08:22	
Bromomethane	<0.127	50.0	55.5	111	57.0	114	48-120	3	25	ug/L	08.29.18 08:22	
Carbon Disulfide	<0.173	50.0	44.0	88	46.9	94	53-138	6	25	ug/L	08.29.18 08:22	
Carbon Tetrachloride	<5.00	50.0	46.3	93	48.4	97	68-135	4	25	ug/L	08.29.18 08:22	
Chlorobenzene	<5.00	50.0	44.5	89	46.0	92	78-124	3	25	ug/L	08.29.18 08:22	
Chloroethane	<0.190	50.0	49.5	99	49.6	99	55-120	0	25	ug/L	08.29.18 08:22	
Chloroform	<5.00	50.0	45.3	91	47.7	95	71-119	5	25	ug/L	08.29.18 08:22	
Chloromethane	<5.00	50.0	43.4	87	44.7	89	54-114	3	25	ug/L	08.29.18 08:22	
cis-1,2-Dichloroethene	<5.00	50.0	45.6	91	47.6	95	74-130	4	25	ug/L	08.29.18 08:22	
cis-1,3-Dichloropropene	<5.00	50.0	48.1	96	50.1	100	74-138	4	25	ug/L	08.29.18 08:22	
Dibromochloromethane	<5.00	50.0	46.4	93	49.7	99	74-135	7	25	ug/L	08.29.18 08:22	
Dibromomethane	<5.00	50.0	44.8	90	47.1	94	71-124	5	25	ug/L	08.29.18 08:22	
Dichlorodifluoromethane	<5.00	50.0	50.1	100	52.9	106	59-121	5	25	ug/L	08.29.18 08:22	
Ethylbenzene	<5.00	50.0	44.7	89	46.4	93	69-131	4	25	ug/L	08.29.18 08:22	
Hexachlorobutadiene	<5.00	50.0	52.4	105	54.7	109	74-130	4	25	ug/L	08.29.18 08:22	
Iodomethane (Methyl Iodide)	<0.170	50.0	46.2	92	49.2	98	66-115	6	25	ug/L	08.29.18 08:22	
isopropylbenzene	<5.00	50.0	45.7	91	47.7	95	66-133	4	25	ug/L	08.29.18 08:22	
m,p-Xylenes	<1.00	100	89.5	90	93.9	94	69-132	5	25	ug/L	08.29.18 08:22	

MS/MSD Percent Recovery	[D] = 100*(C-A) / B	LCS = Laboratory Control Sample	MS = Matrix Spike
Relative Percent Difference	RPD = 200* | (C-E) / (C+E) |	A = Parent Result	B = Spike Added
LCS/LCSD Recovery	[D] = 100 * (C) / [B]	C = MS/LCS Result	D = MSD/LCSD % Rec
Log Difference	Log Diff. = Log(Sample Duplicate) - Log(Original Sample)	E = MSD/LCSD Result	

QC Summary 595904

AMEC Foster Wheeler

Cave Creek Landfill

Analytical Method: VOCs by SW 8260B Prep Method: SW5030B

Seq Number: 3061633 Matrix: Water Date Prep: 08.29.18

MB Sample Id: 7661375-1-BLK LCS Sample Id: 7661375-1-BKS LCSD Sample Id: 7661375-1-BSD

Parameter	MB Result	Spike Amount	LCS Result	LCS %Rec	LCSD Result	LCSD %Rec	Limits	%RPD	RPD Limit	Units	Analysis Date	Flag
Methylene Chloride	<5.00	50.0	49.4	99	50.8	102	60-121	3	25	ug/L	08.29.18 08:22	
MTBE	<5.00	50.0	47.2	94	48.9	98	60-152	4	25	ug/L	08.29.18 08:22	
Naphthalene	<10.0	50.0	55.4	111	56.2	112	69-140	1	25	ug/L	08.29.18 08:22	
n-Butylbenzene	<5.00	50.0	48.5	97	50.6	101	82-128	4	25	ug/L	08.29.18 08:22	
n-Propylbenzene	<5.00	50.0	47.0	94	48.9	98	86-129	4	25	ug/L	08.29.18 08:22	
o-Xylene	<5.00	50.0	45.0	90	47.2	94	67-132	5	25	ug/L	08.29.18 08:22	
p-Cymene (p-Isopropyltoluene)	<5.00	50.0	48.4	97	50.0	100	85-129	3	25	ug/L	08.29.18 08:22	
Sec-Butylbenzene	<5.00	50.0	47.9	96	49.7	99	83-130	4	25	ug/L	08.29.18 08:22	
Styrene	<5.00	50.0	46.3	93	47.3	95	79-128	2	25	ug/L	08.29.18 08:22	
tert-Butylbenzene	<5.00	50.0	47.1	94	50.0	100	83-131	6	25	ug/L	08.29.18 08:22	
Tetrachloroethylene	<0.347	50.0	42.8	86	45.1	90	79-122	5	25	ug/L	08.29.18 08:22	
Toluene	<5.00	50.0	43.5	87	45.1	90	62-132	4	25	ug/L	08.29.18 08:22	
trans-1,2-dichloroethene	<5.00	50.0	43.3	87	45.3	91	64-109	5	25	ug/L	08.29.18 08:22	
Trichloroethene	<5.00	50.0	44.0	88	47.3	95	74-123	7	25	ug/L	08.29.18 08:22	
Trichlorofluoromethane	<0.191	50.0	49.4	99	50.3	101	70-143	2	25	ug/L	08.29.18 08:22	
Vinyl Acetate	<50.0	250	237	95	240	96	63-145	1	25	ug/L	08.29.18 08:22	
Vinyl Chloride	<2.00	50.0	48.2	96	50.3	101	59-124	4	25	ug/L	08.29.18 08:22	
trans-1,3-dichloropropene	<5.00	50.0	47.6	95	49.6	99	70-132	4	25	ug/L	08.29.18 08:22	
1,1,2-Trichloro-1,2,2-Trifluoroethane	<0.175	50.0	50.2	100	50.7	101	73-118	1	25	ug/L	08.29.18 08:22	
1,3-Butadiene	<5.00	50.0	48.2	96	47.7	95	70-150	1	25	ug/L	08.29.18 08:22	
Cyclohexane	<5.00	50.0	49.1	98	48.6	97	65-121	1	25	ug/L	08.29.18 08:22	
Dicyclopentadiene	<5.00	50.0	46.4	93	48.6	97	70-120	5	25	ug/L	08.29.18 08:22	
Methylcyclohexane	<10.0	50.0	48.9	98	49.4	99	67-118	1	25	ug/L	08.29.18 08:22	
n-Hexane	<5.00	50.0	52.3	105	51.1	102	72-125	2	25	ug/L	08.29.18 08:22	

Surrogate	MB %Rec	MB Flag	LCS %Rec	LCS Flag	LCSD %Rec	LCSD Flag	Limits	Units	Analysis Date
Dibromofluoromethane	95		104		101		75-131	%	08.29.18 08:22
1,2-Dichloroethane-D4	98		100		99		63-144	%	08.29.18 08:22
Toluene-D8	105		97		96		80-117	%	08.29.18 08:22
4-Bromofluorobenzene	100		103		102		74-124	%	08.29.18 08:22

MS/MSD Percent Recovery	[D] = 100*(C-A) / B	LCS = Laboratory Control Sample	MS = Matrix Spike
Relative Percent Difference	RPD = 200* | (C-E) / (C+E) |	A = Parent Result	B = Spike Added
LCS/LCSD Recovery	[D] = 100 * (C) / [B]	C = MS/LCS Result	D = MSD/LCSD % Rec
Log Difference	Log Diff. = Log(Sample Duplicate) - Log(Original Sample)	E = MSD/LCSD Result	

QC Summary 595904

AMEC Foster Wheeler

Cave Creek Landfill

Analytical Method: VOCs by SW 8260B Prep Method: SW5030C

Seq Number: 3061683 Matrix: Water Date Prep: 08.29.18

MB Sample Id: 7661413-1-BLK LCS Sample Id: 7661413-1-BKS LCSD Sample Id: 7661413-1-BSD

Parameter	MB Result	Spike Amount	LCS Result	LCS %Rec	LCSD Result	LCSD %Rec	Limits	%RPD	RPD Limit	Units	Analysis Date	Flag
1,1,1,2-Tetrachloroethane	<0.500	20.0	22.7	114	21.6	108	70-130	5	20	ug/L	08.29.18 22:22	
1,1,1-Trichloroethane	<0.500	20.0	21.8	109	21.2	106	70-130	3	20	ug/L	08.29.18 22:22	
1,1,2,2-Tetrachloroethane	<0.500	20.0	22.4	112	22.6	113	70-130	1	20	ug/L	08.29.18 22:22	
1,1,2-Trichloroethane	<0.500	20.0	22.8	114	23.0	115	70-130	1	20	ug/L	08.29.18 22:22	
1,1-Dichloroethane	<0.500	20.0	21.4	107	21.8	109	70-130	2	20	ug/L	08.29.18 22:22	
1,1-Dichloroethene	<0.500	20.0	21.5	108	21.5	108	70-130	0	21	ug/L	08.29.18 22:22	
1,1-Dichloropropene	<1.00	20.0	21.7	109	21.8	109	70-130	0	20	ug/L	08.29.18 22:22	
1,2,3-Trichlorobenzene	<5.00	20.0	23.4	117	23.3	117	70-130	0	27	ug/L	08.29.18 22:22	
1,2,3-Trichloropropane	<1.00	20.0	21.3	107	21.0	105	70-130	1	20	ug/L	08.29.18 22:22	
1,2,4-Trichlorobenzene	<5.00	20.0	23.7	119	23.0	115	70-130	3	20	ug/L	08.29.18 22:22	
1,2,4-Trimethylbenzene	<2.00	20.0	22.3	112	22.1	111	70-130	1	20	ug/L	08.29.18 22:22	
1,2-Dibromo-3-Chloropropane	<2.00	20.0	20.0	100	20.5	103	70-130	2	21	ug/L	08.29.18 22:22	
1,2-Dibromoethane	<0.500	20.0	23.1	116	22.3	112	70-130	4	20	ug/L	08.29.18 22:22	
1,2-Dichlorobenzene	<1.50	20.0	22.3	112	22.0	110	70-130	1	20	ug/L	08.29.18 22:22	
1,2-Dichloroethane	<0.500	20.0	22.9	115	22.8	114	70-130	0	20	ug/L	08.29.18 22:22	
1,2-Dichloropropane	<0.500	20.0	22.2	111	22.1	111	70-130	0	20	ug/L	08.29.18 22:22	
1,3,5-Trimethylbenzene	<1.50	20.0	22.5	113	21.9	110	70-130	3	20	ug/L	08.29.18 22:22	
1,3-Dichlorobenzene	<1.50	20.0	22.4	112	22.6	113	70-130	1	20	ug/L	08.29.18 22:22	
1,3-Dichloropropane	<1.00	20.0	23.1	116	22.6	113	70-130	2	20	ug/L	08.29.18 22:22	
1,4-Dichlorobenzene	<1.50	20.0	22.2	111	22.5	113	70-130	1	20	ug/L	08.29.18 22:22	
2,2-Dichloropropane	<0.500	20.0	22.7	114	22.2	111	70-130	2	24	ug/L	08.29.18 22:22	
2-Butanone	<5.00	40.0	48.2	121	46.5	116	51-116	4	27	ug/L	08.29.18 22:22	L1
2-Chlorotoluene	<1.50	20.0	21.9	110	21.9	110	70-130	0	20	ug/L	08.29.18 22:22	
2-Hexanone	<5.00	40.0	47.4	119	44.5	111	59-101	6	20	ug/L	08.29.18 22:22	L1
4-Chlorotoluene	<2.00	20.0	22.5	113	22.3	112	70-130	1	28	ug/L	08.29.18 22:22	
4-Methyl-2-Pentanone	<5.00	40.0	46.0	115	47.1	118	57-106	2	21	ug/L	08.29.18 22:22	L1
Acetone	<20.0	40.0	44.7	112	46.7	117	47-128	4	28	ug/L	08.29.18 22:22	
Benzene	<0.500	20.0	21.9	110	22.2	111	70-130	1	20	ug/L	08.29.18 22:22	
Bromobenzene	<1.50	20.0	22.9	115	22.3	112	70-130	3	20	ug/L	08.29.18 22:22	
Bromochloromethane	<0.500	20.0	20.0	100	20.7	104	70-130	3	24	ug/L	08.29.18 22:22	
Bromodichloromethane	<0.500	20.0	22.5	113	22.7	114	70-130	1	20	ug/L	08.29.18 22:22	
Bromoform	<1.00	20.0	22.3	112	22.7	114	66-132	2	20	ug/L	08.29.18 22:22	
Bromomethane	<5.00	20.0	20.2	101	20.8	104	63-130	3	25	ug/L	08.29.18 22:22	
Carbon Disulfide	<0.500	20.0	21.7	109	21.3	107	70-130	2	22	ug/L	08.29.18 22:22	
Carbon Tetrachloride	<0.500	20.0	21.9	110	22.0	110	70-130	0	21	ug/L	08.29.18 22:22	
Chlorobenzene	<0.500	20.0	22.0	110	21.5	108	70-130	2	20	ug/L	08.29.18 22:22	
Chloroethane	<4.00	20.0	24.9	125	18.6	93	70-140	29	24	ug/L	08.29.18 22:22	N1
Chloroform	<0.500	20.0	21.3	107	21.2	106	70-130	0	24	ug/L	08.29.18 22:22	
Chloromethane	<5.00	20.0	23.5	118	23.6	118	25-130	0	26	ug/L	08.29.18 22:22	
cis-1,2-Dichloroethene	<0.500	20.0	21.8	109	21.5	108	70-130	1	24	ug/L	08.29.18 22:22	
cis-1,3-Dichloropropene	<1.00	20.0	21.7	109	22.3	112	70-130	3	20	ug/L	08.29.18 22:22	
Dibromochloromethane	<0.500	20.0	22.1	111	22.1	111	70-130	0	20	ug/L	08.29.18 22:22	
Dibromomethane	<0.500	20.0	21.6	108	22.1	111	70-130	2	23	ug/L	08.29.18 22:22	
Dichlorodifluoromethane	<2.00	20.0	19.9	100	18.6	93	25-136	7	27	ug/L	08.29.18 22:22	
Ethylbenzene	<2.00	20.0	22.3	112	22.2	111	70-130	0	20	ug/L	08.29.18 22:22	
Hexachlorobutadiene	<5.00	20.0	22.0	110	22.0	110	63-139	0	22	ug/L	08.29.18 22:22	
Iodomethane (Methyl Iodide)	<2.00	20.0	16.8	84	15.6	78	70-130	7	22	ug/L	08.29.18 22:22	
isopropylbenzene	<2.50	20.0	22.6	113	22.5	113	70-130	0	20	ug/L	08.29.18 22:22	
m,p-Xylenes	<2.00	40.0	44.4	111	43.3	108	70-130	3	20	ug/L	08.29.18 22:22	

MS/MSD Percent Recovery	[D] = 100*(C-A) / B	LCS = Laboratory Control Sample	MS = Matrix Spike
Relative Percent Difference	RPD = 200* | (C-E) / (C+E) |	A = Parent Result	B = Spike Added
LCS/LCSD Recovery	[D] = 100 * (C) / [B]	C = MS/LCS Result	D = MSD/LCSD % Rec
Log Difference	Log Diff. = Log(Sample Duplicate) - Log(Original Sample)	E = MSD/LCSD Result	

QC Summary 595904

AMEC Foster Wheeler

Cave Creek Landfill

Analytical Method: VOCs by SW 8260B Prep Method: SW5030C

Seq Number: 3061683 Matrix: Water Date Prep: 08.29.18

MB Sample Id: 7661413-1-BLK LCS Sample Id: 7661413-1-BKS LCSD Sample Id: 7661413-1-BSD

Parameter	MB Result	Spike Amount	LCS Result	LCS %Rec	LCSD Result	LCSD %Rec	Limits	%RPD	RPD Limit	Units	Analysis Date	Flag
Methylene Chloride	<3.00	20.0	23.4	117	22.7	114	70-130	3	20	ug/L	08.29.18 22:22	
MTBE	<2.00	20.0	22.4	112	22.1	111	70-130	1	21	ug/L	08.29.18 22:22	
Naphthalene	<5.00	20.0	23.4	117	23.3	117	70-130	0	27	ug/L	08.29.18 22:22	
n-Butylbenzene	<2.50	20.0	23.3	117	22.6	113	70-130	3	20	ug/L	08.29.18 22:22	
n-Propylbenzene	<2.00	20.0	22.8	114	22.7	114	70-130	0	20	ug/L	08.29.18 22:22	
o-Xylene	<1.00	20.0	22.7	114	21.9	110	70-130	4	20	ug/L	08.29.18 22:22	
p-Cymene (p-Isopropyltoluene)	<1.50	20.0	22.0	110	22.3	112	70-130	1	20	ug/L	08.29.18 22:22	
Sec-Butylbenzene	<1.50	20.0	22.5	113	21.7	109	70-130	4	20	ug/L	08.29.18 22:22	
Styrene	<1.00	20.0	21.5	108	20.8	104	70-130	3	20	ug/L	08.29.18 22:22	
tert-Butylbenzene	<2.50	20.0	23.8	119	21.0	105	70-130	13	20	ug/L	08.29.18 22:22	
Tetrachloroethylene	<0.500	20.0	21.6	108	21.7	109	70-130	0	20	ug/L	08.29.18 22:22	
Toluene	<2.00	20.0	21.3	107	21.1	106	70-130	1	20	ug/L	08.29.18 22:22	
trans-1,2-dichloroethene	<0.500	20.0	21.2	106	21.2	106	70-130	0	21	ug/L	08.29.18 22:22	
Trichloroethene	<0.500	20.0	21.5	108	21.4	107	70-130	0	20	ug/L	08.29.18 22:22	
Trichlorofluoromethane	<2.00	20.0	20.7	104	20.1	101	70-130	3	22	ug/L	08.29.18 22:22	
Vinyl Acetate	<5.00	20.0	22.4	112	21.9	110	46-172	2	22	ug/L	08.29.18 22:22	
Vinyl Chloride	<0.500	20.0	21.9	110	20.1	101	41-132	9	25	ug/L	08.29.18 22:22	
trans-1,3-dichloropropene	<0.500	20.0	24.0	120	23.4	117	70-130	3	20	ug/L	08.29.18 22:22	
1,1,2-Trichloro-1,2,2-Trifluoroethane	<5.00	20.0	21.4	107	20.6	103	64-125	4	22	ug/L	08.29.18 22:22	
1,3-Butadiene	<5.00	20.0	21.6	108	22.3	112	58-134	3	20	ug/L	08.29.18 22:22	
Cyclohexane	<5.00	20.0	24.2	121	23.8	119	70-130	2	21	ug/L	08.29.18 22:22	
Dicyclopentadiene	<5.00	20.0	22.4	112	21.9	110	70-130	2	20	ug/L	08.29.18 22:22	
Methylcyclohexane	<5.00	20.0	21.0	105	21.2	106	70-130	1	20	ug/L	08.29.18 22:22	
n-Hexane	<5.00	20.0	23.7	119	23.7	119	67-130	0	20	ug/L	08.29.18 22:22	

Surrogate	MB %Rec	MB Flag	LCS %Rec	LCS Flag	LCSD %Rec	LCSD Flag	Limits	Units	Analysis Date
4-Bromofluorobenzene	94		95		98		74-124	%	08.29.18 22:22
Dibromofluoromethane	100		101		102		75-131	%	08.29.18 22:22
1,2-Dichloroethane-D4	102		99		101		63-144	%	08.29.18 22:22
Toluene-D8	100		99		102		80-117	%	08.29.18 22:22

MS/MSD Percent Recovery [D] = 100*(C-A) / B LCS = Laboratory Control Sample MS = Matrix Spike
Relative Percent Difference RPD = 200* | (C-E) / (C+E) | A = Parent Result B = Spike Added
LCS/LCSD Recovery [D] = 100 * (C) / [B] C = MS/LCS Result D = MSD/LCSD % Rec
Log Difference Log Diff. = Log(Sample Duplicate) - Log(Original Sample) E = MSD/LCSD Result

QC Summary 595904

AMEC Foster Wheeler

Cave Creek Landfill

Analytical Method: VOCs by SW 8260B Prep Method: SW5030C

Seq Number: 3061308 Matrix: Water Date Prep: 08.27.18

Parent Sample Id: 595905-002 MS Sample Id: 595905-002 S MSD Sample Id: 595905-002 SD

Parameter	Parent Result	Spike Amount	MS Result	MS %Rec	MSD Result	MSD %Rec	Limits	%RPD	RPD Limit	Units	Analysis Date	Flag
1,1,1,2-Tetrachloroethane	<0.500	20.0	17.4	87	18.2	91	70-130	4	20	ug/L	08.27.18 14:27	
1,1,1-Trichloroethane	<0.500	20.0	18.1	91	16.3	82	70-130	10	20	ug/L	08.27.18 14:27	
1,1,2,2-Tetrachloroethane	<0.500	20.0	21.0	105	18.2	91	70-130	14	20	ug/L	08.27.18 14:27	
1,1,2-Trichloroethane	<0.500	20.0	20.4	102	17.5	88	70-130	15	20	ug/L	08.27.18 14:27	
1,1-Dichloroethane	<0.500	20.0	19.0	95	16.9	85	70-130	12	20	ug/L	08.27.18 14:27	
1,1-Dichloroethene	<0.500	20.0	19.1	96	15.6	78	63-144	20	20	ug/L	08.27.18 14:27	
1,1-Dichloropropene	<1.00	20.0	17.8	89	16.3	82	70-130	9	20	ug/L	08.27.18 14:27	
1,2,3-Trichlorobenzene	<5.00	20.0	17.3	87	17.1	86	70-130	1	24	ug/L	08.27.18 14:27	
1,2,3-Trichloropropane	<1.00	20.0	19.8	99	18.4	92	70-130	7	20	ug/L	08.27.18 14:27	
1,2,4-Trichlorobenzene	<5.00	20.0	16.8	84	17.5	88	70-130	4	20	ug/L	08.27.18 14:27	
1,2,4-Trimethylbenzene	<2.00	20.0	18.8	94	17.0	85	70-130	10	22	ug/L	08.27.18 14:27	
1,2-Dibromo-3-Chloropropane	<2.00	20.0	16.0	80	16.2	81	70-130	1	22	ug/L	08.27.18 14:27	
1,2-Dibromoethane	<0.500	20.0	19.4	97	18.3	92	70-130	6	20	ug/L	08.27.18 14:27	
1,2-Dichlorobenzene	<1.50	20.0	17.9	90	16.9	85	70-130	6	20	ug/L	08.27.18 14:27	
1,2-Dichloroethane	<0.500	20.0	17.1	86	17.3	87	70-130	1	20	ug/L	08.27.18 14:27	
1,2-Dichloropropane	<0.500	20.0	20.8	104	18.2	91	70-130	13	20	ug/L	08.27.18 14:27	
1,3,5-Trimethylbenzene	<1.50	20.0	18.9	95	16.8	84	70-130	12	20	ug/L	08.27.18 14:27	
1,3-Dichlorobenzene	<1.50	20.0	17.3	87	16.6	83	70-130	4	20	ug/L	08.27.18 14:27	
1,3-Dichloropropane	<1.00	20.0	21.1	106	17.7	89	70-130	18	20	ug/L	08.27.18 14:27	
1,4-Dichlorobenzene	<1.50	20.0	17.8	89	17.1	86	70-130	4	20	ug/L	08.27.18 14:27	
2,2-Dichloropropane	<0.500	20.0	18.3	92	17.3	87	70-130	6	20	ug/L	08.27.18 14:27	
2-Butanone	<5.00	40.0	47.8	120	37.0	93	40-133	25	22	ug/L	08.27.18 14:27	R5
2-Chlorotoluene	<1.50	20.0	19.7	99	17.1	86	70-130	14	20	ug/L	08.27.18 14:27	
2-Hexanone	<5.00	40.0	40.6	102	31.9	80	61-106	24	33	ug/L	08.27.18 14:27	
4-Chlorotoluene	<2.00	20.0	19.9	100	17.8	89	70-130	11	20	ug/L	08.27.18 14:27	
4-Methyl-2-Pentanone	<5.00	40.0	46.8	117	44.1	110	70-130	6	20	ug/L	08.27.18 14:27	
Acetone	42.4	40.0	70.2	70	63.0	52	7-174	11	20	ug/L	08.27.18 14:27	
Benzene	<0.500	20.0	18.7	94	17.1	86	70-130	9	20	ug/L	08.27.18 14:27	
Bromobenzene	<1.50	20.0	17.3	87	17.2	86	70-130	1	20	ug/L	08.27.18 14:27	
Bromochloromethane	<0.500	20.0	17.0	85	16.8	84	70-130	1	22	ug/L	08.27.18 14:27	
Bromodichloromethane	<0.500	20.0	19.1	96	18.1	91	70-130	5	20	ug/L	08.27.18 14:27	
Bromoform	<1.00	20.0	18.0	90	19.4	97	70-130	7	20	ug/L	08.27.18 14:27	
Bromomethane	<5.00	20.0	18.7	94	17.1	86	43-147	9	22	ug/L	08.27.18 14:27	
Carbon Disulfide	<0.500	20.0	16.3	82	15.3	77	50-137	6	28	ug/L	08.27.18 14:27	
Carbon Tetrachloride	<0.500	20.0	17.0	85	17.0	85	67-136	0	20	ug/L	08.27.18 14:27	
Chlorobenzene	<0.500	20.0	17.6	88	17.0	85	70-130	3	20	ug/L	08.27.18 14:27	
Chloroethane	<4.00	20.0	16.2	81	15.9	80	57-156	2	20	ug/L	08.27.18 14:27	
Chloroform	<0.500	20.0	17.4	87	15.4	77	70-130	12	22	ug/L	08.27.18 14:27	
Chloromethane	1.93	20.0	23.4	107	19.7	89	24-129	17	22	ug/L	08.27.18 14:27	
cis-1,2-Dichloroethene	<0.500	20.0	18.6	93	17.0	85	70-130	9	20	ug/L	08.27.18 14:27	
cis-1,3-Dichloropropene	<1.00	20.0	22.0	110	20.3	102	70-130	8	20	ug/L	08.27.18 14:27	
Dibromochloromethane	<0.500	20.0	15.9	80	16.2	81	70-130	2	20	ug/L	08.27.18 14:27	
Dibromomethane	<0.500	20.0	18.7	94	17.8	89	70-130	5	20	ug/L	08.27.18 14:27	
Dichlorodifluoromethane	<2.00	20.0	16.2	81	15.3	77	21-138	6	33	ug/L	08.27.18 14:27	
Ethylbenzene	<2.00	20.0	18.3	92	16.7	84	70-130	9	20	ug/L	08.27.18 14:27	
Hexachlorobutadiene	<5.00	20.0	16.8	84	17.0	85	64-143	1	20	ug/L	08.27.18 14:27	
Iodomethane (Methyl Iodide)	<2.00	20.0	14.1	71	14.1	71	59-133	0	20	ug/L	08.27.18 14:27	
isopropylbenzene	<2.50	20.0	19.0	95	18.3	92	70-130	4	20	ug/L	08.27.18 14:27	
m,p-Xylenes	<2.00	40.0	36.5	91	34.0	85	70-130	7	20	ug/L	08.27.18 14:27	

MS/MSD Percent Recovery	[D] = 100*(C-A) / B	LCS = Laboratory Control Sample	MS = Matrix Spike
Relative Percent Difference	RPD = 200* | (C-E) / (C+E) |	A = Parent Result	B = Spike Added
LCS/LCSD Recovery	[D] = 100 * (C) / [B]	C = MS/LCS Result	D = MSD/LCSD % Rec
Log Difference	Log Diff. = Log(Sample Duplicate) - Log(Original Sample)	E = MSD/LCSD Result	

QC Summary 595904

AMEC Foster Wheeler

Cave Creek Landfill

Analytical Method: **VOCs by SW 8260B** Prep Method: SW5030C

Seq Number: 3061308 Matrix: Water Date Prep: 08.27.18

Parent Sample Id: 595905-002 MS Sample Id: 595905-002 S MSD Sample Id: 595905-002 SD

Parameter	Parent Result	Spike Amount	MS Result	MS %Rec	MSD Result	MSD %Rec	Limits	%RPD	RPD Limit	Units	Analysis Date	Flag
Methylene Chloride	<3.00	20.0	17.2	86	15.9	80	65-127	8	20	ug/L	08.27.18 14:27	
MTBE	<2.00	20.0	20.0	100	16.7	84	69-135	18	20	ug/L	08.27.18 14:27	
Naphthalene	<5.00	20.0	18.3	92	17.1	86	70-130	7	26	ug/L	08.27.18 14:27	
n-Butylbenzene	<2.50	20.0	19.8	99	16.5	83	70-130	18	20	ug/L	08.27.18 14:27	
n-Propylbenzene	<2.00	20.0	20.5	103	17.6	88	70-130	15	20	ug/L	08.27.18 14:27	
o-Xylene	<1.00	20.0	18.6	93	17.3	87	70-130	7	20	ug/L	08.27.18 14:27	
p-Cymene (p-Isopropyltoluene)	<1.50	20.0	18.0	90	17.0	85	70-130	6	20	ug/L	08.27.18 14:27	
Sec-Butylbenzene	<1.50	20.0	19.0	95	16.7	84	70-130	13	20	ug/L	08.27.18 14:27	
Styrene	<1.00	20.0	18.9	95	17.3	87	37-156	9	37	ug/L	08.27.18 14:27	
tert-Butylbenzene	<2.50	20.0	17.2	86	18.2	91	70-130	6	20	ug/L	08.27.18 14:27	
Tetrachloroethylene	<0.500	20.0	16.0	80	17.1	86	70-130	7	20	ug/L	08.27.18 14:27	
Toluene	<2.00	20.0	18.3	92	21.1	106	70-130	14	20	ug/L	08.27.18 14:27	
trans-1,2-dichloroethene	<0.500	20.0	19.6	98	15.9	80	69-131	21	20	ug/L	08.27.18 14:27	R5
Trichloroethene	2.17	20.0	20.3	91	18.7	83	70-130	8	20	ug/L	08.27.18 14:27	
Trichlorofluoromethane	<2.00	20.0	15.7	79	15.5	78	60-133	1	20	ug/L	08.27.18 14:27	
Vinyl Acetate	<5.00	20.0	19.8	99	17.6	88	32-156	12	23	ug/L	08.27.18 14:27	
Vinyl Chloride	<0.500	20.0	18.0	90	14.4	72	35-139	22	21	ug/L	08.27.18 14:27	R5
trans-1,3-dichloropropene	<0.500	20.0	17.4	87	16.1	81	70-130	8	20	ug/L	08.27.18 14:27	
1,1,2-Trichloro-1,2,2-Trifluoroethane	<5.00	20.0	15.5	78	15.4	77	51-131	1	20	ug/L	08.27.18 14:27	
1,3-Butadiene	<5.00	20.0	20.3	102	15.3	77	37-152	28	20	ug/L	08.27.18 14:27	R5
Cyclohexane	<5.00	20.0	18.4	92	16.0	80	64-138	14	20	ug/L	08.27.18 14:27	
Dicyclopentadiene	<5.00	20.0	20.9	105	16.3	82	13-182	25	20	ug/L	08.27.18 14:27	R5
Methylcyclohexane	<5.00	20.0	19.1	96	17.5	88	70-130	9	20	ug/L	08.27.18 14:27	
n-Hexane	<5.00	20.0	20.2	101	16.1	81	62-128	23	20	ug/L	08.27.18 14:27	R5

Surrogate	MS %Rec	MS Flag	MSD %Rec	MSD Flag	Limits	Units	Analysis Date
4-Bromofluorobenzene	85		80		74-124	%	08.27.18 14:27
Dibromofluoromethane	86		81		75-131	%	08.27.18 14:27
1,2-Dichloroethane-D4	78		80		63-144	%	08.27.18 14:27
Toluene-D8	88		94		80-117	%	08.27.18 14:27

MS/MSD Percent Recovery	[D] = 100*(C-A) / B	LCS = Laboratory Control Sample	MS = Matrix Spike
Relative Percent Difference	RPD = 200* | (C-E) / (C+E) |	A = Parent Result	B = Spike Added
LCS/LCSD Recovery	[D] = 100 * (C) / [B]	C = MS/LCS Result	D = MSD/LCSD % Rec
Log Difference	Log Diff. = Log(Sample Duplicate) - Log(Original Sample)	E = MSD/LCSD Result	

QC Summary 595904

AMEC Foster Wheeler

Cave Creek Landfill

Analytical Method: VOCs by SW 8260B Prep Method: SW5030C

Seq Number: 3061683 Matrix: Water Date Prep: 08.29.18

Parent Sample Id: 595904-006 MS Sample Id: 595904-006 S MSD Sample Id: 595904-006 SD

Parameter	Parent Result	Spike Amount	MS Result	MS %Rec	MSD Result	MSD %Rec	Limits	%RPD	RPD Limit	Units	Analysis Date	Flag
1,1,1,2-Tetrachloroethane	<0.500	20.0	26.3	132	17.3	87	70-130	41	20	ug/L	08.30.18 02:24	M1R2
1,1,1-Trichloroethane	<0.500	20.0	20.5	103	17.2	86	70-130	18	20	ug/L	08.30.18 02:24	
1,1,2,2-Tetrachloroethane	<0.500	20.0	18.5	93	17.1	86	70-130	8	20	ug/L	08.30.18 02:24	
1,1,2-Trichloroethane	<0.500	20.0	23.6	118	18.0	90	70-130	27	20	ug/L	08.30.18 02:24	R2
1,1-Dichloroethane	<0.500	20.0	26.2	131	17.6	88	70-130	39	20	ug/L	08.30.18 02:24	M1R2
1,1-Dichloroethene	<0.500	20.0	19.1	96	17.3	87	63-144	10	20	ug/L	08.30.18 02:24	
1,1-Dichloropropene	<1.00	20.0	19.8	99	17.7	89	70-130	11	20	ug/L	08.30.18 02:24	
1,2,3-Trichlorobenzene	<5.00	20.0	19.4	97	17.1	86	70-130	13	24	ug/L	08.30.18 02:24	
1,2,3-Trichloropropane	<1.00	20.0	22.7	114	16.5	83	70-130	32	20	ug/L	08.30.18 02:24	R2
1,2,4-Trichlorobenzene	<5.00	20.0	28.1	141	18.6	93	70-130	41	20	ug/L	08.30.18 02:24	M1R2
1,2,4-Trimethylbenzene	<2.00	20.0	25.9	130	18.1	91	70-130	35	22	ug/L	08.30.18 02:24	R2
1,2-Dibromo-3-Chloropropane	<2.00	20.0	22.9	115	16.9	85	70-130	30	22	ug/L	08.30.18 02:24	R2
1,2-Dibromoethane	<0.500	20.0	20.8	104	17.6	88	70-130	17	20	ug/L	08.30.18 02:24	
1,2-Dichlorobenzene	<1.50	20.0	19.6	98	17.7	89	70-130	10	20	ug/L	08.30.18 02:24	
1,2-Dichloroethane	<0.500	20.0	24.7	124	17.6	88	70-130	34	20	ug/L	08.30.18 02:24	R2
1,2-Dichloropropane	<0.500	20.0	19.7	99	17.3	87	70-130	13	20	ug/L	08.30.18 02:24	
1,3,5-Trimethylbenzene	<1.50	20.0	22.5	113	18.2	91	70-130	21	20	ug/L	08.30.18 02:24	R2
1,3-Dichlorobenzene	<1.50	20.0	19.8	99	17.9	90	70-130	10	20	ug/L	08.30.18 02:24	
1,3-Dichloropropane	<1.00	20.0	20.4	102	17.9	90	70-130	13	20	ug/L	08.30.18 02:24	
1,4-Dichlorobenzene	<1.50	20.0	29.0	145	18.5	93	70-130	44	20	ug/L	08.30.18 02:24	M1R2
2,2-Dichloropropane	<0.500	20.0	24.9	125	17.3	87	70-130	36	20	ug/L	08.30.18 02:24	R2
2-Butanone	<5.00	40.0	36.9	92	37.2	93	40-133	1	22	ug/L	08.30.18 02:24	
2-Chlorotoluene	<1.50	20.0	19.4	97	17.2	86	70-130	12	20	ug/L	08.30.18 02:24	
2-Hexanone	<5.00	40.0	34.2	86	30.9	77	61-106	10	33	ug/L	08.30.18 02:24	
4-Chlorotoluene	<2.00	20.0	20.0	100	17.6	88	70-130	13	20	ug/L	08.30.18 02:24	
4-Methyl-2-Pentanone	<5.00	40.0	36.5	91	32.4	81	70-130	12	20	ug/L	08.30.18 02:24	
Acetone	45.6	40.0	88.6	108	78.9	83	7-174	12	20	ug/L	08.30.18 02:24	
Benzene	<0.500	20.0	19.3	97	17.3	87	70-130	11	20	ug/L	08.30.18 02:24	
Bromobenzene	<1.50	20.0	19.4	97	17.9	90	70-130	8	20	ug/L	08.30.18 02:24	
Bromochloromethane	<0.500	20.0	18.4	92	15.5	78	70-130	17	22	ug/L	08.30.18 02:24	
Bromodichloromethane	<0.500	20.0	23.1	116	17.4	87	70-130	28	20	ug/L	08.30.18 02:24	R2
Bromoform	<1.00	20.0	24.0	120	16.7	84	70-130	36	20	ug/L	08.30.18 02:24	R2
Bromomethane	<5.00	20.0	18.0	90	17.6	88	43-147	2	22	ug/L	08.30.18 02:24	
Carbon Disulfide	<0.500	20.0	18.6	93	17.0	85	50-137	9	28	ug/L	08.30.18 02:24	
Carbon Tetrachloride	<0.500	20.0	22.3	112	17.4	87	67-136	25	20	ug/L	08.30.18 02:24	R2
Chlorobenzene	<0.500	20.0	24.8	124	17.7	89	70-130	33	20	ug/L	08.30.18 02:24	R2
Chloroethane	<4.00	20.0	27.3	137	17.7	89	57-156	43	20	ug/L	08.30.18 02:24	N1
Chloroform	<0.500	20.0	18.6	93	16.9	85	70-130	10	22	ug/L	08.30.18 02:24	
Chloromethane	7.06	20.0	25.6	93	24.8	89	24-129	3	22	ug/L	08.30.18 02:24	
cis-1,2-Dichloroethene	<0.500	20.0	24.9	125	18.2	91	70-130	31	20	ug/L	08.30.18 02:24	R2
cis-1,3-Dichloropropene	<1.00	20.0	18.6	93	16.5	83	70-130	12	20	ug/L	08.30.18 02:24	
Dibromochloromethane	<0.500	20.0	25.4	127	17.0	85	70-130	40	20	ug/L	08.30.18 02:24	R2
Dibromomethane	<0.500	20.0	21.6	108	17.1	86	70-130	23	20	ug/L	08.30.18 02:24	R2
Dichlorodifluoromethane	<2.00	20.0	17.2	86	15.8	79	21-138	8	33	ug/L	08.30.18 02:24	
Ethylbenzene	<2.00	20.0	18.9	95	17.4	87	70-130	8	20	ug/L	08.30.18 02:24	
Hexachlorobutadiene	<5.00	20.0	18.9	95	17.0	85	64-143	11	20	ug/L	08.30.18 02:24	
Iodomethane (Methyl Iodide)	<2.00	20.0	20.1	101	15.8	79	59-133	24	20	ug/L	08.30.18 02:24	R2
isopropylbenzene	<2.50	20.0	21.2	106	17.8	89	70-130	17	20	ug/L	08.30.18 02:24	
m,p-Xylenes	<2.00	40.0	46.7	117	35.0	88	70-130	29	20	ug/L	08.30.18 02:24	R2

MS/MSD Percent Recovery	[D] = 100*(C-A) / B	LCS = Laboratory Control Sample	MS = Matrix Spike
Relative Percent Difference	RPD = 200* | (C-E) / (C+E) |	A = Parent Result	B = Spike Added
LCS/LCSD Recovery	[D] = 100 * (C) / [B]	C = MS/LCS Result	D = MSD/LCSD % Rec
Log Difference	Log Diff. = Log(Sample Duplicate) - Log(Original Sample)	E = MSD/LCSD Result	

QC Summary 595904

AMEC Foster Wheeler

Cave Creek Landfill

Analytical Method: VOCs by SW 8260B Prep Method: SW5030C

Seq Number: 3061683 Matrix: Water Date Prep: 08.29.18

Parent Sample Id: 595904-006 MS Sample Id: 595904-006 S MSD Sample Id: 595904-006 SD

Parameter	Parent Result	Spike Amount	MS Result	MS %Rec	MSD Result	MSD %Rec	Limits	%RPD	RPD Limit	Units	Analysis Date	Flag
Methylene Chloride	<3.00	20.0	27.3	137	18.7	94	65-127	37	20	ug/L	08.30.18 02:24	M1R2
MTBE	<2.00	20.0	28.9	145	17.6	88	69-135	49	20	ug/L	08.30.18 02:24	M1R2
Naphthalene	<5.00	20.0	22.1	111	18.5	93	70-130	18	26	ug/L	08.30.18 02:24	
n-Butylbenzene	<2.50	20.0	21.8	109	18.4	92	70-130	17	20	ug/L	08.30.18 02:24	
n-Propylbenzene	<2.00	20.0	26.3	132	19.0	95	70-130	32	20	ug/L	08.30.18 02:24	M1R2
o-Xylene	<1.00	20.0	25.3	127	17.6	88	70-130	36	20	ug/L	08.30.18 02:24	R2
p-Cymene (p-Isopropyltoluene)	<1.50	20.0	19.5	98	18.0	90	70-130	8	20	ug/L	08.30.18 02:24	
Sec-Butylbenzene	<1.50	20.0	20.2	101	17.7	89	70-130	13	20	ug/L	08.30.18 02:24	
Styrene	<1.00	20.0	18.1	91	16.3	82	37-156	10	37	ug/L	08.30.18 02:24	
tert-Butylbenzene	<2.50	20.0	23.8	119	19.1	96	70-130	22	20	ug/L	08.30.18 02:24	R2
Tetrachloroethylene	<0.500	20.0	25.1	126	18.2	91	70-130	32	20	ug/L	08.30.18 02:24	R2
Toluene	<2.00	20.0	18.7	94	16.6	83	70-130	12	20	ug/L	08.30.18 02:24	
trans-1,2-dichloroethene	<0.500	20.0	18.9	95	17.2	86	69-131	9	20	ug/L	08.30.18 02:24	
Trichloroethene	0.790	20.0	21.9	106	18.1	87	70-130	19	20	ug/L	08.30.18 02:24	
Trichlorofluoromethane	<2.00	20.0	18.0	90	17.1	86	60-133	5	20	ug/L	08.30.18 02:24	
Vinyl Acetate	<5.00	20.0	15.1	76	15.0	75	32-156	1	23	ug/L	08.30.18 02:24	
Vinyl Chloride	<0.500	20.0	17.9	90	17.3	87	35-139	3	21	ug/L	08.30.18 02:24	
trans-1,3-dichloropropene	<0.500	20.0	22.8	114	17.6	88	70-130	26	20	ug/L	08.30.18 02:24	R2
1,1,2-Trichloro-1,2,2-Trifluoroethane	<5.00	20.0	18.1	91	16.5	83	51-131	9	20	ug/L	08.30.18 02:24	
1,3-Butadiene	<5.00	20.0	17.9	90	17.1	86	37-152	5	20	ug/L	08.30.18 02:24	
Cyclohexane	<5.00	20.0	20.5	103	19.6	98	64-138	4	20	ug/L	08.30.18 02:24	
Dicyclopentadiene	<5.00	20.0	19.6	98	17.4	87	13-182	12	20	ug/L	08.30.18 02:24	
Methylcyclohexane	<5.00	20.0	18.8	94	17.1	86	70-130	9	20	ug/L	08.30.18 02:24	
n-Hexane	<5.00	20.0	20.0	100	18.8	94	62-128	6	20	ug/L	08.30.18 02:24	

Surrogate	MS %Rec	MS Flag	MSD %Rec	MSD Flag	Limits	Units	Analysis Date
4-Bromofluorobenzene	95		85		74-124	%	08.30.18 02:24
Dibromofluoromethane	102		89		75-131	%	08.30.18 02:24
1,2-Dichloroethane-D4	106		92		63-144	%	08.30.18 02:24
Toluene-D8	103		92		80-117	%	08.30.18 02:24

MS/MSD Percent Recovery	[D] = 100*(C-A) / B	LCS = Laboratory Control Sample	MS = Matrix Spike
Relative Percent Difference	RPD = 200* | (C-E) / (C+E) |	A = Parent Result	B = Spike Added
LCS/LCSD Recovery	[D] = 100 * (C) / [B]	C = MS/LCS Result	D = MSD/LCSD % Rec
Log Difference	Log Diff. = Log(Sample Duplicate) - Log(Original Sample)	E = MSD/LCSD Result	

QC Summary 595904

AMEC Foster Wheeler

Cave Creek Landfill

Analytical Method: VOCs by SW 8260B Prep Method: SW5030B

Seq Number: 3061633 Matrix: Water Date Prep: 08.29.18

Parent Sample Id: 596899-016 MS Sample Id: 596899-016 S

Parameter	Parent Result	Spike Amount	MS Result	MS %Rec	Limits	Units	Analysis Date	Flag
1,1,1,2-Tetrachloroethane	<5.00	50.0	44.8	90	75-114	ug/L	08.29.18 09:15	
1,1,1-Trichloroethane	<5.00	50.0	47.3	95	75-118	ug/L	08.29.18 09:15	
1,1,2,2-Tetrachloroethane	<5.00	50.0	44.1	88	75-113	ug/L	08.29.18 09:15	
1,1,2-Trichloroethane	<5.00	50.0	45.1	90	75-114	ug/L	08.29.18 09:15	
1,1-Dichloroethane	<5.00	50.0	43.8	88	71-121	ug/L	08.29.18 09:15	
1,1-Dichloroethene	0.680	50.0	45.2	89	74-124	ug/L	08.29.18 09:15	
1,1-Dichloropropene	<5.00	50.0	44.8	90	77-116	ug/L	08.29.18 09:15	
1,2,3-Trichlorobenzene	<5.00	50.0	51.5	103	70-140	ug/L	08.29.18 09:15	
1,2,3-Trichloropropane	<5.00	50.0	43.5	87	73-115	ug/L	08.29.18 09:15	
1,2,4-Trichlorobenzene	<5.00	50.0	47.0	94	71-135	ug/L	08.29.18 09:15	
1,2,4-Trimethylbenzene	<5.00	50.0	45.4	91	74-118	ug/L	08.29.18 09:15	
1,2-Dibromo-3-Chloropropane	<5.00	50.0	42.7	85	70-124	ug/L	08.29.18 09:15	
1,2-Dibromoethane	<5.00	50.0	45.3	91	75-117	ug/L	08.29.18 09:15	
1,2-Dichlorobenzene	<5.00	50.0	44.1	88	77-115	ug/L	08.29.18 09:15	
1,2-Dichloroethane	<5.00	50.0	44.6	89	72-111	ug/L	08.29.18 09:15	
1,2-Dichloropropane	<5.00	50.0	45.6	91	75-113	ug/L	08.29.18 09:15	
1,3,5-Trimethylbenzene	<5.00	50.0	45.6	91	77-119	ug/L	08.29.18 09:15	
1,3-Dichlorobenzene	<5.00	50.0	44.6	89	79-112	ug/L	08.29.18 09:15	
1,3-Dichloropropane	<5.00	50.0	44.0	88	74-113	ug/L	08.29.18 09:15	
1,4-Dichlorobenzene	<5.00	50.0	43.1	86	76-112	ug/L	08.29.18 09:15	
2,2-Dichloropropane	<5.00	50.0	49.3	99	58-131	ug/L	08.29.18 09:15	
2-Butanone	<50.0	250	202	81	59-114	ug/L	08.29.18 09:15	
2-Chlorotoluene	<5.00	50.0	42.2	84	79-113	ug/L	08.29.18 09:15	
2-Hexanone	<50.0	250	238	95	66-129	ug/L	08.29.18 09:15	
4-Chlorotoluene	<5.00	50.0	45.7	91	76-114	ug/L	08.29.18 09:15	
4-Methyl-2-Pentanone	<50.0	250	227	91	73-126	ug/L	08.29.18 09:15	
Acetone	<100	250	221	88	33-121	ug/L	08.29.18 09:15	
Benzene	<5.00	50.0	44.4	89	76-110	ug/L	08.29.18 09:15	
Bromobenzene	<5.00	50.0	43.6	87	77-114	ug/L	08.29.18 09:15	
Bromochloromethane	<5.00	50.0	43.9	88	72-112	ug/L	08.29.18 09:15	
Bromodichloromethane	<5.00	50.0	45.9	92	75-116	ug/L	08.29.18 09:15	
Bromoform	<5.00	50.0	47.5	95	66-119	ug/L	08.29.18 09:15	
Bromomethane	<5.00	50.0	55.6	111	60-110	ug/L	08.29.18 09:15	M1
Carbon Disulfide	<5.00	50.0	45.3	91	71-128	ug/L	08.29.18 09:15	
Carbon Tetrachloride	<5.00	50.0	46.2	92	77-119	ug/L	08.29.18 09:15	
Chlorobenzene	<5.00	50.0	44.6	89	78-110	ug/L	08.29.18 09:15	
Chloroethane	<10.0	50.0	63.4	127	62-113	ug/L	08.29.18 09:15	M1
Chloroform	<5.00	50.0	44.7	89	79-111	ug/L	08.29.18 09:15	
Chloromethane	<5.00	50.0	42.6	85	64-115	ug/L	08.29.18 09:15	
cis-1,2-Dichloroethene	<5.00	50.0	44.5	89	72-121	ug/L	08.29.18 09:15	
cis-1,3-Dichloropropene	<5.00	50.0	47.5	95	75-119	ug/L	08.29.18 09:15	
Dibromochloromethane	<5.00	50.0	45.8	92	74-117	ug/L	08.29.18 09:15	
Dibromomethane	<5.00	50.0	42.7	85	72-114	ug/L	08.29.18 09:15	
Dichlorodifluoromethane	<5.00	50.0	53.0	106	64-138	ug/L	08.29.18 09:15	
Ethylbenzene	<5.00	50.0	45.3	91	80-116	ug/L	08.29.18 09:15	
Hexachlorobutadiene	<5.00	50.0	56.3	113	79-123	ug/L	08.29.18 09:15	
Iodomethane (Methyl Iodide)	<20.0	50.0	45.9	92	74-108	ug/L	08.29.18 09:15	
isopropylbenzene	<5.00	50.0	45.7	91	79-117	ug/L	08.29.18 09:15	
m,p-Xylenes	<10.0	100	89.9	90	79-118	ug/L	08.29.18 09:15	

MS/MSD Percent Recovery	[D] = 100*(C-A) / B	LCS = Laboratory Control Sample	MS = Matrix Spike
Relative Percent Difference	RPD = 200* | (C-E) / (C+E) |	A = Parent Result	B = Spike Added
LCS/LCSD Recovery	[D] = 100 * (C) / [B]	C = MS/LCS Result	D = MSD/LCSD % Rec
Log Difference	Log Diff. = Log(Sample Duplicate) - Log(Original Sample)	E = MSD/LCSD Result	

QC Summary 595904

AMEC Foster Wheeler

Cave Creek Landfill

Analytical Method: **VOCs by SW 8260B** Prep Method: SW5030B
Seq Number: 3061633 Matrix: Water Date Prep: 08.29.18
Parent Sample Id: 596899-016 MS Sample Id: 596899-016 S

Parameter	Parent Result	Spike Amount	MS Result	MS %Rec	Limits	Units	Analysis Date	Flag
Methylene Chloride	<5.00	50.0	48.7	97	67-116	ug/L	08.29.18 09:15	
MTBE	<5.00	50.0	45.6	91	70-125	ug/L	08.29.18 09:15	
Naphthalene	<10.0	50.0	52.4	105	72-157	ug/L	08.29.18 09:15	
n-Butylbenzene	<5.00	50.0	48.2	96	74-128	ug/L	08.29.18 09:15	
n-Propylbenzene	<5.00	50.0	45.5	91	75-121	ug/L	08.29.18 09:15	
o-Xylene	<5.00	50.0	46.0	92	78-122	ug/L	08.29.18 09:15	
p-Cymene (p-Isopropyltoluene)	<5.00	50.0	48.1	96	71-123	ug/L	08.29.18 09:15	
Sec-Butylbenzene	<5.00	50.0	46.8	94	76-126	ug/L	08.29.18 09:15	
Styrene	<5.00	50.0	45.3	91	74-124	ug/L	08.29.18 09:15	
tert-Butylbenzene	<5.00	50.0	46.4	93	77-124	ug/L	08.29.18 09:15	
Tetrachloroethylene	<5.00	50.0	44.1	88	78-117	ug/L	08.29.18 09:15	
Toluene	<0.500	50.0	44.0	88	77-112	ug/L	08.29.18 09:15	
trans-1,2-dichloroethene	<5.00	50.0	43.4	87	72-117	ug/L	08.29.18 09:15	
Trichloroethene	<5.00	50.0	44.4	89	70-123	ug/L	08.29.18 09:15	
Trichlorofluoromethane	<5.00	50.0	50.3	101	69-118	ug/L	08.29.18 09:15	
Vinyl Acetate	<50.0	250	220	88	68-114	ug/L	08.29.18 09:15	
Vinyl Chloride	<2.00	50.0	50.8	102	65-114	ug/L	08.29.18 09:15	
trans-1,3-dichloropropene	<5.00	50.0	46.5	93	75-123	ug/L	08.29.18 09:15	
1,1,2-Trichloro-1,2,2-Trifluoroethane	<10.0	50.0	50.6	101	75-125	ug/L	08.29.18 09:15	
1,3-Butadiene	<5.00	50.0	47.8	96	77-104	ug/L	08.29.18 09:15	
Cyclohexane	<5.00	50.0	48.2	96	74-123	ug/L	08.29.18 09:15	
Dicyclopentadiene	<0.0540	50.0	44.8	90	73-108	ug/L	08.29.18 09:15	
Methylcyclohexane	<10.0	50.0	49.9	100	76-125	ug/L	08.29.18 09:15	
n-Hexane	<5.00	50.0	51.7	103	66-132	ug/L	08.29.18 09:15	

Surrogate	MS %Rec	MS Flag	Limits	Units	Analysis Date
Dibromofluoromethane	102		75-131	%	08.29.18 09:15
1,2-Dichloroethane-D4	97		63-144	%	08.29.18 09:15
Toluene-D8	100		80-117	%	08.29.18 09:15
4-Bromofluorobenzene	102		74-124	%	08.29.18 09:15

Analytical Method: **PAHs by 8270C SIM** Prep Method: SW3510C
Seq Number: 3060769 Matrix: Water Date Prep: 08.20.18
MB Sample Id: 7660688-1-BLK LCS Sample Id: 7660688-1-BKS LCSD Sample Id: 7660688-1-BSD

Parameter	MB Result	Spike Amount	LCS Result	LCS %Rec	LCSD Result	LCSD %Rec	Limits	%RPD	RPD Limit	Units	Analysis Date	Flag
Naphthalene	<0.500	1.00	0.828	83	0.825	83	35-116	0	25	ug/L	08.20.18 18:32	

Surrogate	MB %Rec	MB Flag	LCS %Rec	LCS Flag	LCSD %Rec	LCSD Flag	Limits	Units	Analysis Date
Nitrobenzene-d5	80		86		89		41-128	%	08.20.18 18:32
2-Fluorobiphenyl	81		88		86		55-135	%	08.20.18 18:32
Terphenyl-D14	103		115		113		54-131	%	08.20.18 18:32

MS/MSD Percent Recovery	[D] = 100*(C-A) / B	LCS = Laboratory Control Sample	MS = Matrix Spike
Relative Percent Difference	RPD = 200* | (C-E) / (C+E) |	A = Parent Result	B = Spike Added
LCS/LCSD Recovery	[D] = 100 * (C) / [B]	C = MS/LCS Result	D = MSD/LCSD % Rec
Log Difference	Log Diff. = Log(Sample Duplicate) - Log(Original Sample)	E = MSD/LCSD Result	

CHAIN OF CUSTODY

595904

Page 1 Of 73

XENCO LABORATORIES

Setting the Standard since 1990

Stafford,Texas (281-240-4200)
Dallas Texas (214-902-0300)
San Antonio, Texas (210-509-3334)
Midland, Texas (432-704-5251)
Phoenix, Arizona (480-355-0900)

www.xenco.com

Xenco Quote #080717RK-AMECFW | Xenco Job #

Client / Reporting Information

Company Name / Branch: Amec Foster Wheeler
Company Address: 4600 E Washington St. Suite 600 Phoenix, AZ 85034
Email: SAMANTHA.SARGENT@WOODPLC.COM, EMILY .LODOLCE@WOODPLC.COM
Phone No: 602.733.6030, 602.733.6081
Project Contact: Emily LoDolce - (602) 733-6081
Samplers's Name

Project Information

Project Name/Number: Cave Creek Landfill 14-2017-2034.****.021
Project Location: Phoenix. AZ
Invoice To: Amec Foster Wheeler - ATTN: Emily LoDolce, 4600 E Washington St. Suite 600, Phoenix, AZ 85034
PO Number: C014101574

Analytical Information

Matrix Codes

W = Water
S = Soil/Sed/Solid
GW =Ground Water
DW = Drinking Water
P = Product
SW = Surface water
SL = Sludge
OW =Ocean/Sea Water
WI = Wipe
O = Oil
WW= Waste Water
A = Air

No.	Field ID / Point of Collection	Sample Depth	Date	Time	Matrix	# of bottles	HCl	NaOH/Zn Acetate	HNO3	H2SO4	NaOH	NaHSO4	MEOH	NONE	8260B VOCs	Field Comments
1	TSSV02-733-081518	733	8/15/18	1330	W	3	X								X	
2	TSSV03-760-081518	760	8/15/18	1110	W	3	X								X	
3	TSSV04-760-081518	760	8/15/18	1300	W	3	X								X	
4	TSSV05-760-081518	760	8/15/18	1210	W	3	X								X	
5	TSSV06-729-081418	729	8/14/18	8:10	W	3	X								X	
6	TSSV07-742-081418	742	8/14/18	7:10	W	3	X								X	MS/MSD taken
7	~~EW-740~~ EW01-740-081518	740	~~8/14/18~~	~~8:00~~	W	3	X								X	
8	MW09-718-081418	718	8/14/18	9:00	W	3	X								X	
9	MW10-704-081418	704	8/14/18	9:50	W	3	X								X	
10	DUP02-081518	NA	8/15/18	11:10	W	3	X								X	

Turnaround Time (Business days)

- [ ] Same Day TAT
- [ ] 5 Day TAT
- [ ] Next Day EMERGENCY
- [x] 7 Day TAT
- [ ] 2 Day EMERGENCY
- [ ] Contract TAT
- [ ] 3 Day EMERGENCY

TAT Starts Day received by Lab, if received by 5:00 pm

Data Deliverable Information

- [ ] Level II Std QC
- [ ] Level IV (Full Data Pkg /raw data)
- [ ] Level III Std QC+ Forms
- [ ] TRRP Level IV
- [ ] Level 3 (CLP Forms)
- [ ] UST / RG -411
- [ ] TRRP Checklist

Notes:

FED-EX / UPS: Tracking #

SAMPLE CUSTODY MUST BE DOCUMENTED BELOW EACH TIME SAMPLES CHANGE POSSESSION, INCLUDING COURIER DELIVERY

	Date Time			Date Time		
Relinquished by Sampler: 1	8/15/18 15:30	Received By: 1	Relinquished By: 2	8.15.18 1725	Received By: 2	
Relinquished by: 3		Received By: 3	Relinquished By: 4		Received By: 4	
Relinquished by: 5		Received By: 5	Custody Seal #	Preserved where applicable	On Ice: X	Cooler Temp. 20°

Thermo. Corr. Factor N/A

Notice: Notice: Signature of this document and relinquishment of samples constitutes a valid purchase order from client company to Xenco, its affiliates and subcontractors. It assigns standard terms and conditions of service. Xenco will be liable only for the cost of samples and shall not assume any responsibility for any losses or expenses incurred by the Client if such loses are due to circumstances beyond the control of Xenco. A minimum charge of $75 will be applied to each project. Xenco's liability will be limited to the cost of samples. Any samples received by Xenco but not analyzed will be invoiced at $5 per sample. These terms will be enforced unless previously negotiated under a fully executed client contract.

CHAIN OF CUSTODY

595904

Page 2 Of 23

XENCO LABORATORIES

Setting the Standard since 1990

Stafford,Texas (281-240-4200)
Dallas Texas (214-902-0300)
San Antonio, Texas (210-509-3334)
Midland, Texas (432-704-5251)
Phoenix, Arizona (480-355-0900)

www.xenco.com

Xenco Quote #080717RK-AMECFW | Xenco Job #

Client / Reporting Information

Company Name / Branch: Amec Foster Wheeler
Company Address: 4600 E Washington St. Suite 600 Phoenix, AZ 85034
Email: SAMANTHA.SARGENT@WOODPLC.COM, EMILY .LODOLCE@WOODPLC.COM
Phone No: 602.733.6030, 602.733.6081
Project Contact: Emily LoDolce - (602) 733-6081
Samplers's Name

Project Information

Project Name/Number: Cave Creek Landfill 14-2017-2034.****.021
Project Location: Phoenix. AZ
Invoice To: Amec Foster Wheeler - ATTN: Emily LoDolce, 4600 E Washington St. Suite 600, Phoenix, AZ 85034
PO Number: C014101574

Analytical Information

Matrix Codes

W = Water
S = Soil/Sed/Solid
GW =Ground Water
DW = Drinking Water
P = Product
SW = Surface water
SL = Sludge
OW =Ocean/Sea Water
WI = Wipe
O = Oil
WW= Waste Water
A = Air

No.	Field ID / Point of Collection	Sample Depth	Date	Time	Matrix	# of bottles	HCl	NaOH/Zn Acetate	HNO3	H2SO4	NaOH	NaHSO4	MEOH	NONE	8270 SVOCs (Naphthalene only)	Field Comments
1	MW02-714- 081518	714	8/15/18	0900	W	1								X	X	
2	MW03-724- 081318	724	8/13/18	1230	W	1								X	X	
3	MW04-~~709~~ 708- 081318	~~709~~ 708	8/13/18	0900	W	1								X	X	
4	MW05-704- 081418	704	8/14/18	1025	W	1								X	X	
5	MW06-720-081318	720	8/13/18	1100	W	1								X	X	
6	MW07-718- 081318	718	8/13/18	1000	W	1								X	X	
7	MW08-742- 081418	742	8/14/18	1300	W	1								X	X	
8	PW-734- 081518	734	8/15/18	1430	W	1								X	X	
9	DUP 01-081418	NA	8/14/18	1430	W	1								X	X	

Turnaround Time (Business days)

- [ ] Same Day TAT
- [ ] 5 Day TAT
- [ ] Next Day EMERGENCY
- [x] 7 Day TAT
- [ ] 2 Day EMERGENCY
- [ ] Contract TAT
- [ ] 3 Day EMERGENCY

TAT Starts Day received by Lab, if received by 5:00 pm

Data Deliverable Information

- [ ] Level II Std QC
- [ ] Level IV (Full Data Pkg /raw data)
- [ ] Level III Std QC+ Forms
- [ ] TRRP Level IV
- [ ] Level 3 (CLP Forms)
- [ ] UST / RG -411
- [ ] TRRP Checklist

Notes:

FED-EX / UPS: Tracking #

SAMPLE CUSTODY MUST BE DOCUMENTED BELOW EACH TIME SAMPLES CHANGE POSSESSION, INCLUDING COURIER DELIVERY

Relinquished by Sampler:	Date Time:	Received By:	Relinquished By:	Date Time:	Received By:
1	8/15/18 15:30	1 E. Mills	2 E. Mills	8.15.18 1725	2
Relinquished by: 3	Date Time:	Received By: 3	Relinquished By: 4	Date Time:	Received By: 4
Relinquished by: 5	Date Time:	Received By: 5	Custody Seal #	Preserved where applicable	On Ice [X] Cooler Temp. 2.0° Thermo. Corr. Factor

Notice: Notice: Signature of this document and relinquishment of samples constitutes a valid purchase order from client company to Xenco, its affiliates and subcontractors. It assigns standard terms and conditions of service. Xenco will be liable only for the cost of samples and shall not assume any responsibility for any losses or expenses incurred by the Client if such loses are due to circumstances beyond the control of Xenco. A minimum charge of $75 will be applied to each project. Xenco's liability will be limited to the cost of samples. Any samples received by Xenco but not analyzed will be invoiced at $5 per sample. These terms will be enforced unless previously negotiated under a fully executed client contract.

CHAIN OF CUSTODY

Page 23 Of 23

595904

XENCO LABORATORIES

Setting the Standard since 1990

Stafford,Texas (281-240-4200)
Dallas Texas (214-902-0300)
San Antonio, Texas (210-509-3334)
Midland, Texas (432-704-5251)
Phoenix, Arizona (480-355-0900)

www.xenco.com

Xenco Quote #080717RK-AMECFW
Xenco Job #

Client / Reporting Information

Company Name / Branch: Amec Foster Wheeler
Company Address: 4600 E Washington St. Suite 600 Phoenix, AZ 85034
Email: SAMANTHA.SARGENT@WOODPLC.COM, EMILY.LODOLCE@WOODPLC.COM
Phone No: 602.733.6030, 602.733.6081
Project Contact: Emily LoDolce - (602) 733-6081
Samplers's Name

Project Information

Project Name/Number: Cave Creek Landfill 14-2017-2034.****.021
Project Location: Phoenix, AZ
Invoice To: Amec Foster Wheeler - ATTN: Emily LoDolce, 4600 E Washington St. Suite 600, Phoenix, AZ 85034
PO Number: C014101574

Analytical Information

Matrix Codes

W = Water
S = Soil/Sed/Solid
GW =Ground Water
DW = Drinking Water
P = Product
SW = Surface water
SL = Sludge
OW =Ocean/Sea Water
WI = Wipe
O = Oil
WW= Waste Water
A = Air

No.	Field ID / Point of Collection	Sample Depth	Date	Time	Matrix	# of bottles	HCl	NaOH/Zn Acetate	HNO3	H2SO4	NaOH	NaHSO4	MEOH	NONE	8260B VOCs	Field Comments
1	TRIP BLANK-081518	NA	8/15/18	NA	W	3	X								X	
2	PDB BLANK-081518	NA	8/15/18	1430	W	3	X								X	
3																
4																
5																
6																
7																
8																
9																

Turnaround Time (Business days)

- [ ] Same Day TAT
- [ ] 5 Day TAT
- [ ] Next Day EMERGENCY
- [x] 7 Day TAT
- [ ] 2 Day EMERGENCY
- [ ] Contract TAT
- [ ] 3 Day EMERGENCY

TAT Starts Day received by Lab, if received by 5:00 pm

Data Deliverable Information

- [ ] Level II Std QC
- [ ] Level IV (Full Data Pkg /raw data)
- [ ] Level III Std QC+ Forms
- [ ] TRRP Level IV
- [ ] Level 3 (CLP Forms)
- [ ] UST / RG -411
- [ ] TRRP Checklist

Notes:

FED-EX / UPS: Tracking #

SAMPLE CUSTODY MUST BE DOCUMENTED BELOW EACH TIME SAMPLES CHANGE POSSESSION, INCLUDING COURIER DELIVERY

	Relinquished by Sampler:	Date Time:	Received By:	Relinquished By:	Date Time:	Received By:
1	[signature]	8/15/18 15:30	1 [signature]	2 [signature]	8.15.18 1725	2
3	Relinquished by:	Date Time:	Received By: 3	Relinquished By: 4	Date Time:	Received By: 4
5	Relinquished by:	Date Time:	Received By: 5	Custody Seal #	Preserved where applicable	On Ice / Cooler Temp. / Thermo. Corr. Factor

Notice: Notice: Signature of this document and relinquishment of samples constitutes a valid purchase order from client company to Xenco, its affiliates and subcontractors. It assigns standard terms and conditions of service. Xenco will be liable only for the cost of samples and shall not assume any responsibility for any losses or expenses incurred by the Client if such loses are due to circumstances beyond the control of Xenco. A minimum charge of $75 will be applied to each project. Xenco's liability will be limited to the cost of samples. Any samples received by Xenco but not analyzed will be invoiced at $5 per sample. These terms will be enforced unless previously negotiated under a fully executed client contract.

Sample Receipt Checklist

Client Name: AMEC F.W

Date and Time Received: 8.15.18@17:25

Work Order Number: 595904

Checked by: SH

Checklist completed by: RW

Logged In by: RW Date: 8.16.18

Matrix: W Courier Name: Client TWA _____

Shipping container/cooler in good condition?	Yes ☑	No ☐	Not Present ☐	
Custody seals intact on shipping container/cooler?	Yes ☐	No ☐	Not Present ☑	
Custody seals intact on sample bottles?	Yes ☐	No ☐	Not Present ☑	
Chain of custody signed when relinquished and received?	Yes ☑	No ☐	Not Present ☐	
Chain of custody agrees with sample labels?	Yes ☑	No ☐		
Samples in proper container/bottle?	Yes ☑	No ☐		
Sample containers intact?	Yes ☑	No ☐		
Sufficient sample volume for indicated test?	Yes ☑	No ☐		
All samples received within holding time?	Yes ☑	No ☐		
All samples received same day of collection?	Yes ☐	No ☑	Temp: 2.0	Wet Ice Present ☑
Where was the temperature reading taken at?	Sample ☐	Temp Blank ☑	Other:	
VOA Water – VOA vials have zero headspace?	Yes ☑	No ☐	N/A ☐	
Water – Microbiological bottles have ≤ 2.5 cm headspace?	Yes ☐	No ☐	N/A ☑	
Water – All sample pH's acceptable upon receipt?	Yes ☐	No ☐	N/A ☑	Checked by: N/A

If No, list all samples and bottle types that are not acceptable in Additional Comments section. Also state any correction actions.

Dissolved Metals – Field Filtered?	Yes ☐	No ☐	N/A ☑

Additional Comments: _____

SRChecklist 2016.1

Inter-Office Shipment

IOS Number **112385**

Date/Time: 08/16/18 17:43
Lab# From: **Phoenix**
Lab# To: **Houston**

Created by: Ruriko Konuma
Delivery Priority:
Air Bill No.: 772997615049

Please send report to: Skip Harden
Address: 2525 West Huntington Drive, Suite 102
Phone: Tempe, AZ 85282
E-Mail: skip.harden@xenco.com

Sample Id	Matrix	Client Sample Id	Sample Collection	Method	Method Name	Lab Due	HT Due	PM	Analytes	Sign
595904-011	W	MW2-714-081518	08/15/18 09:00	SIM_PAH	PAHs by 8270C SIM	08/24/18	08/22/18	WWH	NAPH	
595904-012	W	MW3-714-081318	08/13/18 12:30	SIM_PAH	PAHs by 8270C SIM	08/24/18	08/20/18	WWH	NAPH	
595904-013	W	MW4-708-081318	08/13/18 09:00	SIM_PAH	PAHs by 8270C SIM	08/24/18	08/20/18	WWH	NAPH	
595904-014	W	MW5-704-081418	08/14/18 10:45	SIM_PAH	PAHs by 8270C SIM	08/24/18	08/21/18	WWH	NAPH	
595904-015	W	MW6-720-081318	08/13/18 11:00	SIM_PAH	PAHs by 8270C SIM	08/24/18	08/20/18	WWH	NAPH	
595904-016	W	MW7-718-081318	08/13/18 10:00	SIM_PAH	PAHs by 8270C SIM	08/24/18	08/20/18	WWH	NAPH	
595904-017	W	MW8-742-081418	08/14/18 13:00	SIM_PAH	PAHs by 8270C SIM	08/24/18	08/21/18	WWH	NAPH	
595904-018	W	PW-734-081518	08/15/18 14:30	SIM_PAH	PAHs by 8270C SIM	08/24/18	08/22/18	WWH	NAPH	
595904-019	W	DUP01-081418	08/14/18 14:30	SIM_PAH	PAHs by 8270C SIM	08/24/18	08/21/18	WWH	NAPH	

Inter Office Shipment or Sample Comments:

Relinquished By: Ruriko Konuma

Date Relinquished: 08/16/2018

Received By: Monica Shakhshir

Date Received: 08/17/2018 09:10

Cooler Temperature: 1.2

Inter-Office Shipment

IOS Number **112999**

Date/Time: 08/28/18 16:15
Lab# From: **Phoenix**
Lab# To: **Houston**

Created by: Skip Harden
Delivery Priority:
Air Bill No.: 773086580468

Please send report to: Skip Harden
Address: 2525 West Huntington Drive, Suite 102
Phone: Tempe, AZ 85282
E-Mail: skip.harden@xenco.com

Sample Id	Matrix	Client Sample Id	Sample Collection	Method	Method Name	Lab Due	HT Due	PM	Analytes	Sign
595904-001	W	TSSV-02-733-081518	08/15/18 13:30	SW8260B_AZ	VOCs by SW 8260B	08/29/18	08/29/18	WWH	ACE BDCME BRBZ BRCI	
595904-002	W	TSSV-03-760-081518	08/15/18 11:10	SW8260B_AZ	VOCs by SW 8260B	08/29/18	08/29/18	WWH	ACE BDCME BRBZ BRCI	
595904-003	W	TSSV-04-760-081518	08/15/18 13:00	SW8260B_AZ	VOCs by SW 8260B	08/29/18	08/29/18	WWH	ACE BDCME BRBZ BRCI	
595904-004	W	TSSV-05-760-081518	08/15/18 12:10	SW8260B_AZ	VOCs by SW 8260B	08/29/18	08/29/18	WWH	ACE BDCME BRBZ BRCI	
595904-007	W	EW01-740-081518	08/15/18 10:10	SW8260B_AZ	VOCs by SW 8260B	08/29/18	08/29/18	WWH	ACE BDCME BRBZ BRCI	
595904-010	W	DUP02-081518	08/15/18 11:10	SW8260B_AZ	VOCs by SW 8260B	08/29/18	08/29/18	WWH	ACE BDCME BRBZ BRCI	
595904-020	W	Trip Blank-081518	08/15/18 14:30	SW8260B_AZ	VOCs by SW 8260B	08/29/18	08/29/18	WWH	ACE BDCME BRBZ BRCI	
595904-021	W	PDB Blank-081518	08/15/18 14:30	SW8260B_AZ	VOCs by SW 8260B	08/29/18	08/29/18	WWH	ACE BDCME BRBZ BRCI	

Inter Office Shipment or Sample Comments:

Relinquished By: Skip Harden

Date Relinquished: 08/28/2018

Received By: Monica Shakhshir

Date Received: 08/29/2018 09:10

Cooler Temperature: 1.9

XENCO Laboratories

Inter Office Report- Sample Receipt Checklist

Sent To: Houston

IOS #: 112385

Acceptable Temperature Range: 0 - 6 degC
Air and Metal samples Acceptable Range: Ambient
Temperature Measuring device used : hou-068

Sent By: Ruriko Konuma **Date Sent:** 08/16/2018 05:43 PM

Received By: Monica Shakhshir **Date Received:** 08/17/2018 09:10 AM

Sample Receipt Checklist		Comments
#1 *Temperature of cooler(s)?	1.2	
#2 *Shipping container in good condition?	**Yes**	
#3 *Samples received with appropriate temperature?	**Yes**	
#4 *Custody Seals intact on shipping container/ cooler?	**Yes**	
#5 *Custody Seals Signed and dated for Containers/coolers	**Yes**	
#6 *IOS present?	**Yes**	
#7 Any missing/extra samples?	**No**	
#8 IOS agrees with sample label(s)/matrix?	**Yes**	
#9 Sample matrix/ properties agree with IOS?	**Yes**	
#10 Samples in proper container/ bottle?	**Yes**	
#11 Samples properly preserved?	**Yes**	
#12 Sample container(s) intact?	**Yes**	
#13 Sufficient sample amount for indicated test(s)?	**Yes**	
#14 All samples received within hold time?	**Yes**	

*** Must be completed for after-hours delivery of samples prior to placing in the refrigerator**

NonConformance:

Corrective Action Taken:

Nonconformance Documentation

Contact: _____ **Contacted by :** _____ **Date:** _____

Checklist reviewed by: _____ Date: 08/17/2018
Monica Shakhshir

XENCO Laboratories

Inter Office Report- Sample Receipt Checklist

Sent To: Houston

IOS #: 112999

Acceptable Temperature Range: 0 - 6 degC
Air and Metal samples Acceptable Range: Ambient
Temperature Measuring device used : hou-068

Sent By: Skip Harden **Date Sent:** 08/28/2018 04:15 PM

Received By: Monica Shakhshir **Date Received:** 08/29/2018 09:10 AM

Sample Receipt Checklist		Comments
#1 *Temperature of cooler(s)?	1.9	
#2 *Shipping container in good condition?	**Yes**	
#3 *Samples received with appropriate temperature?	**Yes**	
#4 *Custody Seals intact on shipping container/ cooler?	**Yes**	
#5 *Custody Seals Signed and dated for Containers/coolers	**Yes**	
#6 *IOS present?	**Yes**	
#7 Any missing/extra samples?	**No**	
#8 IOS agrees with sample label(s)/matrix?	**Yes**	
#9 Sample matrix/ properties agree with IOS?	**Yes**	
#10 Samples in proper container/ bottle?	**Yes**	
#11 Samples properly preserved?	**Yes**	
#12 Sample container(s) intact?	**Yes**	
#13 Sufficient sample amount for indicated test(s)?	**Yes**	
#14 All samples received within hold time?	**Yes**	

*** Must be completed for after-hours delivery of samples prior to placing in the refrigerator**

NonConformance:

Corrective Action Taken:

Nonconformance Documentation

Contact: _____ **Contacted by :** _____ **Date:** _____

Checklist reviewed by: _____ Date: 08/29/2018
Monica Shakhshir

Analytical Report 595905

for

AMEC Foster Wheeler

Project Manager: Emily Lodolce

Cave Creek Landfill - Maricopa

1420172034.**.021**

05-SEP-18

Collected By: Client

2525 West Huntington Drive, Suite 102
Tempe, AZ 85282
Ph: (480) 355-0900

Phoenix (EPA Lab Code: AZ00901): Arizona (AZ0757)
Xenco-Houston (EPA Lab code: TX00122): Arizona (AZ0765)
Xenco-Dallas (EPA Lab code: TX01468): Arizona (AZ0809)

05-SEP-18

Project Manager: **Emily Lodolce**
AMEC Foster Wheeler
4600 E. Washington Suite 600
Phoenix, AZ 85034

Reference: TWA Report No(s): **595905**
Cave Creek Landfill - Maricopa
Project Address:

Emily Lodolce :

We are reporting to you the results of the analyses performed on the samples received under the project name referenced above and identified with the TWA Report Number(s) 595905. All results being reported under this Report Number apply to the samples analyzed and properly identified with a Laboratory ID number. Subcontracted analyses are identified in this report with either the ADHS certification number of the subcontract lab in the analyst ID field, or the complete subcontracted report attached to this report.

Unless otherwise noted in a Case Narrative, all data reported in this Analytical Report are in compliance with ADHS standards. The uncertainty of measurement associated with the results of analysis reported is available upon request. Should insufficient sample be provided to the laboratory to meet the method and ADHS Matrix Duplicate and Matrix Spike requirements, then the data will be analyzed, evaluated and reported using all other available quality control measures.

The validity and integrity of this report will remain intact as long as it is accompanied by this letter and reproduced in full, unless written approval is granted by TransWest Analytical. This report will be filed for at least 5 years in our archives after which time it will be destroyed without further notice, unless otherwise arranged with you. The samples received, and described as recorded in Report No. 595905 will be filed for 45 days, and after that time they will be properly disposed without further notice, unless otherwise arranged with you. We reserve the right to return to you any unused samples, extracts or solutions related to them if we consider so necessary (e.g., samples identified as hazardous waste, sample sizes exceeding analytical standard practices, controlled substances under regulated protocols, etc).

We thank you for selecting TransWest Analytical to serve your analytical needs. If you have any questions concerning this report, please feel free to contact us at any time.

Respectfully,

Skip Harden
Project Manager

Recipient of the Prestigious Small Business Administration Award of Excellence in 1994.
Certified and approved by numerous States and Agencies.
A Small Business and Minority Status Company that delivers SERVICE and QUALITY

Houston - Dallas - Midland - San Antonio - Phoenix - Oklahoma - Latin America

CASE NARRATIVE

Client Name: AMEC Foster Wheeler

Project Name: Cave Creek Landfill - Maricopa

Project ID:	*1420172034.****.021*	Report Date:	*05-SEP-18*
Work Order Number(s):	*595905*	Date Received:	*08/15/2018*

Sample receipt non conformances and comments:

None

Sample receipt non conformances and comments per sample:

None

Analytical non conformances and comments:

Batch: LBA-3061308 VOCs by SW 8260B
R2:
The RPD for 2-Hexanone was outside of acceptance criteria in the LCS/LCSD pair, but within criteria in the MS/MSD pair.

Batch: LBA-3061683 VOCs by SW 8260B
R2:
The RPD for the target analyte was outside of acceptance criteria in the MS/MSD but within criteria in the LCS/LCSD.

Flagging Criteria

Arizona Flags

All method blanks, laboratory spikes, and/or matrix spikes met quality control objectives for the parameters associated with this Work Order except as detailed below or on the Data Qualifier page of this report. Data Qualifiers used in this report are in accordance with ADHS Data Qualifiers, Revision 4.0 9/05/2012.
Data qualifiers (flags) contained within this analytical report have been issued to explain a quality control deficiency, and do not affect the quality (validity) of the data unless noted otherwise in the case narrative.

B1 Target analyte detected in method blank at or above the method reporting limit.

D2 Sample required dilution due to high concentration of target analyte.

E4 Concentration estimated. Analyte was detected below laboratory minimum reporting limit (MRL).

E8 Analyte reported to MDL per project specification. Target analyte was not detected in sample.

H3 Sample was received and analyzed past holding time.

H5 This test is specified to be performed in the field within 15 minutes of sampling; Sample was received and analyzed past the regulatory holding time.

L1 The associated blank spike recovery was above laboratory acceptance limits.

M1 Matrix spike recovery was high; the associated blank spike recovery was acceptable.

R2 RPD/RSD exceeded the laboratory acceptance limit. See case narrative.

R5 MS/MSD RPD exceeded the laboratory acceptance limit. Recovery met acceptance criteria.

R7 LFB/LFBD RPD exceeded the laboratory acceptance limit. Recovery met acceptance criteria.

S6 Surrogate recovery was below laboratory and method acceptance limits. Re-extraction and/or reanalysis confirms low recovery caused by matrix effect.

T4 Tentatively identified compound. Concentration is estimated and based on the closest internal standard.

Sample Cross Reference 595905

AMEC Foster Wheeler, Phoenix, AZ

Cave Creek Landfill - Maricopa

Sample Id	Matrix	Date Collected	Sample Depth	Lab Sample Id
MW02-714-081518	W	08-15-18 09:00		595905-001
MW03-724-081318	W	08-13-18 12:30		595905-002
MW04-708-081318	W	08-13-18 09:00		595905-003
MW05-704-081418	W	08-14-18 10:45		595905-004
MW06-720-081318	W	08-13-18 11:00		595905-005
MW07-718-081318	W	08-13-18 10:00		595905-006
MW08-742-081418	W	08-14-18 13:00		595905-007
PW-734-081518	W	08-15-18 14:30		595905-008
DUP01-081418	W	08-14-18 14:30		595905-009

Certificate of Analytical Results 595905

AMEC Foster Wheeler, Phoenix, AZ

Cave Creek Landfill - Maricopa

Sample Id: **MW02-714-081518** Matrix: Water Date Received:08.15.18 17.25
Lab Sample Id: 595905-001 Date Collected: 08.15.18 09.00

Analytical Method: VOCs by SW 8260B Prep Method: SW5030C
Tech: MNI % Solids:
Analyst: MNI Date Prep: 08.27.18 10.50
Seq Number: 3061308 SUB: AZ0765

Parameter	Cas Number	Result	RL	MDL	Units	Analysis Date	Flag	Dil
1,1,1,2-Tetrachloroethane	630-20-6	<0.100	0.500	0.100	ug/L	08.27.18 22.53	E8	1
1,1,1-Trichloroethane	71-55-6	<0.200	0.500	0.200	ug/L	08.27.18 22.53	E8	1
1,1,2,2-Tetrachloroethane	79-34-5	<0.100	0.500	0.100	ug/L	08.27.18 22.53	E8	1
1,1,2-Trichloroethane	79-00-5	<0.0900	0.500	0.0900	ug/L	08.27.18 22.53	E8	1
1,1-Dichloroethane	75-34-3	**3.63**	0.500	0.0700	ug/L	08.27.18 22.53		1
1,1-Dichloroethene	75-35-4	<0.200	0.500	0.200	ug/L	08.27.18 22.53	E8	1
1,1-Dichloropropene	563-58-6	<0.200	1.00	0.200	ug/L	08.27.18 22.53	E8	1
1,2,3-Trichlorobenzene	87-61-6	<0.200	5.00	0.200	ug/L	08.27.18 22.53	E8	1
1,2,3-Trichloropropane	96-18-4	<0.200	1.00	0.200	ug/L	08.27.18 22.53	E8	1
1,2,4-Trichlorobenzene	120-82-1	<0.0700	5.00	0.0700	ug/L	08.27.18 22.53	E8	1
1,2,4-Trimethylbenzene	95-63-6	<0.0700	2.00	0.0700	ug/L	08.27.18 22.53	E8	1
1,2-Dibromo-3-Chloropropane	96-12-8	<0.300	2.00	0.300	ug/L	08.27.18 22.53	E8	1
1,2-Dibromoethane	106-93-4	<0.200	0.500	0.200	ug/L	08.27.18 22.53	E8	1
1,2-Dichlorobenzene	95-50-1	<0.0800	1.50	0.0800	ug/L	08.27.18 22.53	E8	1
1,2-Dichloroethane	107-06-2	<0.100	0.500	0.100	ug/L	08.27.18 22.53	E8	1
1,2-Dichloropropane	78-87-5	<0.0900	0.500	0.0900	ug/L	08.27.18 22.53	E8	1
1,3,5-Trimethylbenzene	108-67-8	<0.0700	1.50	0.0700	ug/L	08.27.18 22.53	E8	1
1,3-Dichlorobenzene	541-73-1	<0.0600	1.50	0.0600	ug/L	08.27.18 22.53	E8	1
1,3-Dichloropropane	142-28-9	<0.0700	1.00	0.0700	ug/L	08.27.18 22.53	E8	1
1,4-Dichlorobenzene	106-46-7	<0.200	1.50	0.200	ug/L	08.27.18 22.53	E8	1
2,2-Dichloropropane	594-20-7	<0.200	0.500	0.200	ug/L	08.27.18 22.53	E8	1
2-Butanone	78-93-3	<0.300	5.00	0.300	ug/L	08.27.18 22.53	E8	1
2-Chlorotoluene	95-49-8	<0.0800	1.50	0.0800	ug/L	08.27.18 22.53	E8	1
2-Hexanone	591-78-6	<0.200	5.00	0.200	ug/L	08.27.18 22.53	L1E8	1
4-Chlorotoluene	106-43-4	<0.0700	2.00	0.0700	ug/L	08.27.18 22.53	E8	1
4-Methyl-2-Pentanone	108-10-1	<0.200	5.00	0.200	ug/L	08.27.18 22.53	L1E8	1
Acetone	67-64-1	**63.3**	20.0	0.600	ug/L	08.27.18 22.53		1
Benzene	71-43-2	**0.530**	0.500	0.100	ug/L	08.27.18 22.53		1
Bromobenzene	108-86-1	<0.0900	1.50	0.0900	ug/L	08.27.18 22.53	E8	1
Bromochloromethane	74-97-5	<0.200	0.500	0.200	ug/L	08.27.18 22.53	E8	1
Bromodichloromethane	75-27-4	<0.0800	0.500	0.0800	ug/L	08.27.18 22.53	E8	1
Bromoform	75-25-2	<0.100	1.00	0.100	ug/L	08.27.18 22.53	E8	1
Bromomethane	74-83-9	<0.300	5.00	0.300	ug/L	08.27.18 22.53	E8	1
Carbon Disulfide	75-15-0	<0.0900	0.500	0.0900	ug/L	08.27.18 22.53	E8	1
Carbon Tetrachloride	56-23-5	<0.200	0.500	0.200	ug/L	08.27.18 22.53	E8	1
Chlorobenzene	108-90-7	<0.0700	0.500	0.0700	ug/L	08.27.18 22.53	E8	1
Chloroethane	75-00-3	<0.600	4.00	0.600	ug/L	08.27.18 22.53	E8	1
Chloroform	67-66-3	**1.66**	0.500	0.0700	ug/L	08.27.18 22.53	B1	1

Certificate of Analytical Results 595905

AMEC Foster Wheeler, Phoenix, AZ

Cave Creek Landfill - Maricopa

Sample Id: **MW02-714-081518** Matrix: Water Date Received:08.15.18 17.25
Lab Sample Id: 595905-001 Date Collected: 08.15.18 09.00

Analytical Method: VOCs by SW 8260B Prep Method: SW5030C
Tech: MNI % Solids:
Analyst: MNI Date Prep: 08.27.18 10.50
Seq Number: 3061308 SUB: AZ0765

Parameter	Cas Number	Result	RL	MDL	Units	Analysis Date	Flag	Dil
Chloromethane	74-87-3	**7.27**	5.00	0.200	ug/L	08.27.18 22.53		1
cis-1,2-Dichloroethene	156-59-2	**6.42**	0.500	0.200	ug/L	08.27.18 22.53		1
cis-1,3-Dichloropropene	10061-01-5	<0.0800	1.00	0.0800	ug/L	08.27.18 22.53	E8	1
Dibromochloromethane	124-48-1	<0.0700	0.500	0.0700	ug/L	08.27.18 22.53	E8	1
Dibromomethane	74-95-3	<0.200	0.500	0.200	ug/L	08.27.18 22.53	E8	1
Dichlorodifluoromethane	75-71-8	**2.74**	2.00	0.200	ug/L	08.27.18 22.53		1
Ethylbenzene	100-41-4	<0.0900	2.00	0.0900	ug/L	08.27.18 22.53	E8	1
Hexachlorobutadiene	87-68-3	<0.200	5.00	0.200	ug/L	08.27.18 22.53	E8	1
Iodomethane (Methyl Iodide)	74-88-4	<0.300	2.00	0.300	ug/L	08.27.18 22.53	E8	1
isopropylbenzene	98-82-8	<0.0800	2.50	0.0800	ug/L	08.27.18 22.53	E8	1
m,p-Xylenes	179601-23-1	<0.0900	2.00	0.0900	ug/L	08.27.18 22.53	E8	1
Methylene Chloride	75-09-2	<0.200	3.00	0.200	ug/L	08.27.18 22.53	E8	1
MTBE	1634-04-4	<0.100	2.00	0.100	ug/L	08.27.18 22.53	E8	1
Naphthalene	91-20-3	<0.200	5.00	0.200	ug/L	08.27.18 22.53	E8	1
n-Butylbenzene	104-51-8	<0.200	2.50	0.200	ug/L	08.27.18 22.53	E8	1
n-Propylbenzene	103-65-1	<0.0800	2.00	0.0800	ug/L	08.27.18 22.53	E8	1
o-Xylene	95-47-6	<0.0900	1.00	0.0900	ug/L	08.27.18 22.53	E8	1
p-Cymene (p-Isopropyltoluene)	99-87-6	<0.100	1.50	0.100	ug/L	08.27.18 22.53	E8	1
Sec-Butylbenzene	135-98-8	<0.100	1.50	0.100	ug/L	08.27.18 22.53	E8	1
Styrene	100-42-5	<0.0800	1.00	0.0800	ug/L	08.27.18 22.53	E8	1
tert-Butylbenzene	98-06-6	<0.200	2.50	0.200	ug/L	08.27.18 22.53	E8	1
Tetrachloroethylene	127-18-4	**4.87**	0.500	0.0800	ug/L	08.27.18 22.53		1
Toluene	108-88-3	<0.0700	2.00	0.0700	ug/L	08.27.18 22.53	E8	1
Total Trihalomethane		**1.66**	0.500	0.0700	ug/L	08.27.18 22.53		1
Total Xylenes	1330-20-7	<0.0900	1.00	0.0900	ug/L	08.27.18 22.53	E8	1
trans-1,2-dichloroethene	156-60-5	<0.0900	0.500	0.0900	ug/L	08.27.18 22.53	E8	1
Trichloroethene	79-01-6	**83.4**	0.500	0.200	ug/L	08.27.18 22.53		1
Trichlorofluoromethane	75-69-4	<0.400	2.00	0.400	ug/L	08.27.18 22.53	E8	1
Vinyl Acetate	108-05-4	<0.200	5.00	0.200	ug/L	08.27.18 22.53	E8	1
Vinyl Chloride	75-01-4	<0.100	0.500	0.100	ug/L	08.27.18 22.53	E8	1
trans-1,3-dichloropropene	10061-02-6	<0.0600	0.500	0.0600	ug/L	08.27.18 22.53	E8	1
1,1,2-Trichloro-1,2,2-Trifluoroetha	76-13-1	**1.16**	5.00	0.300	ug/L	08.27.18 22.53	E4	1
1,3-Butadiene	106-99-0	<0.276	5.00	0.276	ug/L	08.27.18 22.53	E8	1
Cyclohexane	110-82-7	**0.680**	5.00	0.115	ug/L	08.27.18 22.53	E4	1
Dicyclopentadiene	77-73-6	<0.0540	5.00	0.0540	ug/L	08.27.18 22.53	E8	1
Methylcyclohexane	108-87-2	<0.117	5.00	0.117	ug/L	08.27.18 22.53	E8	1
n-Hexane	110-54-3	<0.0920	5.00	0.0920	ug/L	08.27.18 22.53	E8	1
4-Ethyltoluene	622-96-8	Not Present			ug/L	08.27.18 22.53	T4E8	1

Certificate of Analytical Results 595905

AMEC Foster Wheeler, Phoenix, AZ

Cave Creek Landfill - Maricopa

Sample Id: **MW02-714-081518** Matrix: Water Date Received:08.15.18 17.25
Lab Sample Id: 595905-001 Date Collected: 08.15.18 09.00

Analytical Method: VOCs by SW 8260B Prep Method: SW5030C
Tech: MNI % Solids:
Analyst: MNI Date Prep: 08.27.18 10.50
Seq Number: 3061308 SUB: AZ0765

Parameter	Cas Number	Result	RL	MDL	Units	Analysis Date	Flag	Dil
Propene	115-07-1	Not Present			ug/L	08.27.18 22.53	T4E8	1

Surrogate	% Recovery	Units	Limits	Analysis Date	Flag
4-Bromofluorobenzene	92	%	74-124	08.27.18 22.53	
Dibromofluoromethane	96	%	75-131	08.27.18 22.53	
1,2-Dichloroethane-D4	90	%	63-144	08.27.18 22.53	
Toluene-D8	38	%	80-117	08.27.18 22.53	S6

Analytical Method: Total Metals by SW 6010C Prep Method: SW3010A
Tech: MLI % Solids:
Analyst: DEP Date Prep: 08.23.18 09.30
Seq Number: 3061039 SUB: AZ0765

Parameter	Cas Number	Result	RL	MDL	Units	Analysis Date	Flag	Dil
Antimony	7440-36-0	<0.00589	0.0200	0.00589	mg/L	08.23.18 22.32	E8	1
Arsenic	7440-38-2	<0.00550	0.0200	0.00550	mg/L	08.23.18 22.32	E8	1
Barium	7440-39-3	**0.0269**	0.0100	0.00135	mg/L	08.23.18 22.32		1
Cadmium	7440-43-9	<0.00243	0.0100	0.00243	mg/L	08.23.18 22.32	E8	1
Chromium	7440-47-3	<0.000811	0.0100	0.000811	mg/L	08.23.18 22.32	E8	1
Cobalt	7440-48-4	<0.000673	0.0100	0.000673	mg/L	08.23.18 22.32	E8	1
Copper	7440-50-8	<0.00544	0.0200	0.00544	mg/L	08.23.18 22.32	E8	1
Lead	7439-92-1	<0.00237	0.0150	0.00237	mg/L	08.23.18 22.32	E8	1
Nickel	7440-02-0	<0.00307	0.0100	0.00307	mg/L	08.23.18 22.32	E8	1
Selenium	7782-49-2	<0.00439	0.0300	0.00439	mg/L	08.23.18 22.32	E8	1
Silver	7440-22-4	<0.00559	0.0300	0.00559	mg/L	08.23.18 22.32	E8	1
Thallium	7440-28-0	<0.00621	0.0200	0.00621	mg/L	08.23.18 22.32	E8	1
Titanium	7440-32-6	<0.00156	0.180	0.00156	mg/L	08.23.18 22.32	E8	1
Vanadium	7440-62-2	<0.00518	0.0900	0.00518	mg/L	08.23.18 22.32	E8	1
Zinc	7440-66-6	**0.200**	0.0300	0.00391	mg/L	08.23.18 22.32		1

Certificate of Analytical Results 595905

AMEC Foster Wheeler, Phoenix, AZ

Cave Creek Landfill - Maricopa

Sample Id: **MW02-714-081518** Matrix: Water Date Received:08.15.18 17.25

Lab Sample Id: 595905-001 Date Collected: 08.15.18 09.00

Analytical Method: Alkalinity by SM 2320B

Tech: MON % Solids:

Analyst: TNL

Seq Number: 3060957

Parameter	Cas Number	Result	RL	MDL	Units	Analysis Date	Flag	Dil
Alkalinity, Total (CaCO3)	1640192	**350**	20.0	4.00	mg/L	08.22.18 15.00		1
Alkalinity, Bicarbonate (as CaCO3	471-34-1	**350**	20.0	4.00	mg/L	08.22.18 15.00		1
Alkalinity, Carbonate (as CaCO3	3812-32-6	<4.00	20.0	4.00	mg/L	08.22.18 15.00	E8	1
Alkalinity, Hydroxide (as CaCO3	14280-30-9	<4.00	20.0	4.00	mg/L	08.22.18 15.00	E8	1

Analytical Method: Specific Conductance by SM 2510B

Tech: MON % Solids:

Analyst: TNL

Seq Number: 3060443

Parameter	Cas Number	Result	RL	MDL	Units	Analysis Date	Flag	Dil
Conductivity	COND	**672**	1.00	1.00	uS/cm	08.17.18 14.30		1

Analytical Method: TDS by SM 2540C

Tech: MON % Solids:

Analyst: TNL

Seq Number: 3060722

Parameter	Cas Number	Result	RL	MDL	Units	Analysis Date	Flag	Dil
Total Dissolved Solids	1642222	**412**	10.0	10.0	mg/L	08.17.18 10.00		1

Analytical Method: pH by SM 4500-H

Tech: MON % Solids:

Analyst: TNL

Seq Number: 3060445

Parameter	Cas Number	Result	RL	MDL	Units	Analysis Date	Flag	Dil
pH	12408-02-5	**7.86**	1.00	1.00	SU	08.17.18 11.15	H5	1
Temperature	TEMP	**23.3**	1.0	1.0	Deg C	08.17.18 11.15	H5	1

Certificate of Analytical Results 595905

AMEC Foster Wheeler, Phoenix, AZ

Cave Creek Landfill - Maricopa

Sample Id: **MW02-714-081518** Matrix: Water Date Received:08.15.18 17.25
Lab Sample Id: 595905-001 Date Collected: 08.15.18 09.00

Analytical Method: Inorganic Anions by EPA 300 Prep Method: E300P
Tech: MAB % Solids:
Analyst: MAB Date Prep: 08.24.18 15.40
Seq Number: 3061196 SUB: AZ0765

Parameter	Cas Number	Result	RL	MDL	Units	Analysis Date	Flag	Dil
Chloride	16887-00-6	**18.9**	0.500	0.0280	mg/L	08.24.18 22.27		1
Fluoride	16984-48-8	<0.0360	0.500	0.0360	mg/L	08.24.18 22.27		1
Sulfate	14808-79-8	**2.63**	0.500	0.0460	mg/L	08.24.18 22.27		1

Analytical Method: Nitrite by SM 4500-NO2B
Tech: MON % Solids:
Analyst: TNL
Seq Number: 3060350

Parameter	Cas Number	Result	RL	MDL	Units	Analysis Date	Flag	Dil
Nitrite as N	14797-65-0	<0.0100	0.0200	0.0100	mg/L	08.16.18 14.46	E8	1

Analytical Method: Nitrogen, Nitrate-Nitrite by EPA 353.2 Prep Method: E353.2P
Tech: KCS % Solids:
Analyst: KCS Date Prep: 08.21.18 09.30
Seq Number: 3060750 SUB: AZ0765

Parameter	Cas Number	Result	RL	MDL	Units	Analysis Date	Flag	Dil
Nitrate as N	14797-55-8	**0.302**	0.100	0.0283	mg/L	08.21.18 12.16		1
Nitrogen, Nitrate-Nitrite	7727-37-9	**0.302**	0.100	0.0283	mg/L	08.21.18 12.16		1

Certificate of Analytical Results 595905

AMEC Foster Wheeler, Phoenix, AZ

Cave Creek Landfill - Maricopa

Sample Id: **MW03-724-081318** Matrix: Water Date Received:08.15.18 17.25
Lab Sample Id: 595905-002 Date Collected: 08.13.18 12.30

Analytical Method: VOCs by SW 8260B Prep Method: SW5030C
Tech: MNI % Solids:
Analyst: MNI Date Prep: 08.27.18 10.50
Seq Number: 3061308 SUB: AZ0765

Parameter	Cas Number	Result	RL	MDL	Units	Analysis Date	Flag	Dil
1,1,1,2-Tetrachloroethane	630-20-6	<0.100	0.500	0.100	ug/L	08.27.18 18.32	E8	1
1,1,1-Trichloroethane	71-55-6	<0.200	0.500	0.200	ug/L	08.27.18 18.32	E8	1
1,1,2,2-Tetrachloroethane	79-34-5	<0.100	0.500	0.100	ug/L	08.27.18 18.32	E8	1
1,1,2-Trichloroethane	79-00-5	<0.0900	0.500	0.0900	ug/L	08.27.18 18.32	E8	1
1,1-Dichloroethane	75-34-3	<0.0700	0.500	0.0700	ug/L	08.27.18 18.32	E8	1
1,1-Dichloroethene	75-35-4	<0.200	0.500	0.200	ug/L	08.27.18 18.32	E8	1
1,1-Dichloropropene	563-58-6	<0.200	1.00	0.200	ug/L	08.27.18 18.32	E8	1
1,2,3-Trichlorobenzene	87-61-6	<0.200	5.00	0.200	ug/L	08.27.18 18.32	E8	1
1,2,3-Trichloropropane	96-18-4	<0.200	1.00	0.200	ug/L	08.27.18 18.32	E8	1
1,2,4-Trichlorobenzene	120-82-1	<0.0700	5.00	0.0700	ug/L	08.27.18 18.32	E8	1
1,2,4-Trimethylbenzene	95-63-6	<0.0700	2.00	0.0700	ug/L	08.27.18 18.32	E8	1
1,2-Dibromo-3-Chloropropane	96-12-8	<0.300	2.00	0.300	ug/L	08.27.18 18.32	E8	1
1,2-Dibromoethane	106-93-4	<0.200	0.500	0.200	ug/L	08.27.18 18.32	E8	1
1,2-Dichlorobenzene	95-50-1	<0.0800	1.50	0.0800	ug/L	08.27.18 18.32	E8	1
1,2-Dichloroethane	107-06-2	<0.100	0.500	0.100	ug/L	08.27.18 18.32	E8	1
1,2-Dichloropropane	78-87-5	<0.0900	0.500	0.0900	ug/L	08.27.18 18.32	E8	1
1,3,5-Trimethylbenzene	108-67-8	<0.0700	1.50	0.0700	ug/L	08.27.18 18.32	E8	1
1,3-Dichlorobenzene	541-73-1	<0.0600	1.50	0.0600	ug/L	08.27.18 18.32	E8	1
1,3-Dichloropropane	142-28-9	<0.0700	1.00	0.0700	ug/L	08.27.18 18.32	E8	1
1,4-Dichlorobenzene	106-46-7	<0.200	1.50	0.200	ug/L	08.27.18 18.32	E8	1
2,2-Dichloropropane	594-20-7	<0.200	0.500	0.200	ug/L	08.27.18 18.32	E8	1
2-Butanone	78-93-3	<0.300	5.00	0.300	ug/L	08.27.18 18.32	E8	1
2-Chlorotoluene	95-49-8	<0.0800	1.50	0.0800	ug/L	08.27.18 18.32	E8	1
2-Hexanone	591-78-6	<0.200	5.00	0.200	ug/L	08.27.18 18.32	L1E8	1
4-Chlorotoluene	106-43-4	<0.0700	2.00	0.0700	ug/L	08.27.18 18.32	E8	1
4-Methyl-2-Pentanone	108-10-1	<0.200	5.00	0.200	ug/L	08.27.18 18.32	L1E8	1
Acetone	67-64-1	**42.4**	20.0	0.600	ug/L	08.27.18 18.32		1
Benzene	71-43-2	<0.100	0.500	0.100	ug/L	08.27.18 18.32	E8	1
Bromobenzene	108-86-1	<0.0900	1.50	0.0900	ug/L	08.27.18 18.32	E8	1
Bromochloromethane	74-97-5	<0.200	0.500	0.200	ug/L	08.27.18 18.32	E8	1
Bromodichloromethane	75-27-4	<0.0800	0.500	0.0800	ug/L	08.27.18 18.32	E8	1
Bromoform	75-25-2	<0.100	1.00	0.100	ug/L	08.27.18 18.32	E8	1
Bromomethane	74-83-9	<0.300	5.00	0.300	ug/L	08.27.18 18.32	E8	1
Carbon Disulfide	75-15-0	<0.0900	0.500	0.0900	ug/L	08.27.18 18.32	E8	1
Carbon Tetrachloride	56-23-5	<0.200	0.500	0.200	ug/L	08.27.18 18.32	E8	1
Chlorobenzene	108-90-7	<0.0700	0.500	0.0700	ug/L	08.27.18 18.32	E8	1
Chloroethane	75-00-3	<0.600	4.00	0.600	ug/L	08.27.18 18.32	E8	1
Chloroform	67-66-3	<0.0700	0.500	0.0700	ug/L	08.27.18 18.32	E8	1

Certificate of Analytical Results 595905

AMEC Foster Wheeler, Phoenix, AZ

Cave Creek Landfill - Maricopa

Sample Id: **MW03-724-081318** Matrix: Water Date Received:08.15.18 17.25
Lab Sample Id: 595905-002 Date Collected: 08.13.18 12.30

Analytical Method: VOCs by SW 8260B Prep Method: SW5030C
Tech: MNI % Solids:
Analyst: MNI Date Prep: 08.27.18 10.50
Seq Number: 3061308 SUB: AZ0765

Parameter	Cas Number	Result	RL	MDL	Units	Analysis Date	Flag	Dil
Chloromethane	74-87-3	**1.93**	5.00	0.200	ug/L	08.27.18 18.32	E4	1
cis-1,2-Dichloroethene	156-59-2	<0.200	0.500	0.200	ug/L	08.27.18 18.32	E8	1
cis-1,3-Dichloropropene	10061-01-5	<0.0800	1.00	0.0800	ug/L	08.27.18 18.32	E8	1
Dibromochloromethane	124-48-1	<0.0700	0.500	0.0700	ug/L	08.27.18 18.32	E8	1
Dibromomethane	74-95-3	<0.200	0.500	0.200	ug/L	08.27.18 18.32	E8	1
Dichlorodifluoromethane	75-71-8	<0.200	2.00	0.200	ug/L	08.27.18 18.32	E8	1
Ethylbenzene	100-41-4	<0.0900	2.00	0.0900	ug/L	08.27.18 18.32	E8	1
Hexachlorobutadiene	87-68-3	<0.200	5.00	0.200	ug/L	08.27.18 18.32	E8	1
Iodomethane (Methyl Iodide)	74-88-4	<0.300	2.00	0.300	ug/L	08.27.18 18.32	E8	1
isopropylbenzene	98-82-8	<0.0800	2.50	0.0800	ug/L	08.27.18 18.32	E8	1
m,p-Xylenes	179601-23-1	<0.0900	2.00	0.0900	ug/L	08.27.18 18.32	E8	1
Methylene Chloride	75-09-2	<0.200	3.00	0.200	ug/L	08.27.18 18.32	E8	1
MTBE	1634-04-4	<0.100	2.00	0.100	ug/L	08.27.18 18.32	E8	1
Naphthalene	91-20-3	<0.200	5.00	0.200	ug/L	08.27.18 18.32	E8	1
n-Butylbenzene	104-51-8	<0.200	2.50	0.200	ug/L	08.27.18 18.32	E8	1
n-Propylbenzene	103-65-1	<0.0800	2.00	0.0800	ug/L	08.27.18 18.32	E8	1
o-Xylene	95-47-6	<0.0900	1.00	0.0900	ug/L	08.27.18 18.32	E8	1
p-Cymene (p-Isopropyltoluene)	99-87-6	<0.100	1.50	0.100	ug/L	08.27.18 18.32	E8	1
Sec-Butylbenzene	135-98-8	<0.100	1.50	0.100	ug/L	08.27.18 18.32	E8	1
Styrene	100-42-5	<0.0800	1.00	0.0800	ug/L	08.27.18 18.32	E8	1
tert-Butylbenzene	98-06-6	<0.200	2.50	0.200	ug/L	08.27.18 18.32	E8	1
Tetrachloroethylene	127-18-4	<0.0800	0.500	0.0800	ug/L	08.27.18 18.32	E8	1
Toluene	108-88-3	<0.0700	2.00	0.0700	ug/L	08.27.18 18.32	E8	1
Total Trihalomethane		<0.0700	0.500	0.0700	ug/L	08.27.18 18.32	E8	1
Total Xylenes	1330-20-7	<0.0900	1.00	0.0900	ug/L	08.27.18 18.32	E8	1
trans-1,2-dichloroethene	156-60-5	<0.0900	0.500	0.0900	ug/L	08.27.18 18.32	E8	1
Trichloroethene	79-01-6	**2.17**	0.500	0.200	ug/L	08.27.18 18.32		1
Trichlorofluoromethane	75-69-4	<0.400	2.00	0.400	ug/L	08.27.18 18.32	E8	1
Vinyl Acetate	108-05-4	<0.200	5.00	0.200	ug/L	08.27.18 18.32	E8	1
Vinyl Chloride	75-01-4	<0.100	0.500	0.100	ug/L	08.27.18 18.32	E8	1
trans-1,3-dichloropropene	10061-02-6	<0.0600	0.500	0.0600	ug/L	08.27.18 18.32	E8	1
1,1,2-Trichloro-1,2,2-Trifluoroethane	76-13-1	<0.300	5.00	0.300	ug/L	08.27.18 18.32	E8	1
1,3-Butadiene	106-99-0	<0.276	5.00	0.276	ug/L	08.27.18 18.32	E8	1
Cyclohexane	110-82-7	<0.115	5.00	0.115	ug/L	08.27.18 18.32	E8	1
Dicyclopentadiene	77-73-6	<0.0540	5.00	0.0540	ug/L	08.27.18 18.32	E8	1
Methylcyclohexane	108-87-2	<0.117	5.00	0.117	ug/L	08.27.18 18.32	E8	1
n-Hexane	110-54-3	<0.0920	5.00	0.0920	ug/L	08.27.18 18.32	E8	1
4-Ethyltoluene	622-96-8	Not Present			ug/L	08.27.18 18.32	T4E8	1

Certificate of Analytical Results 595905

AMEC Foster Wheeler, Phoenix, AZ

Cave Creek Landfill - Maricopa

Sample Id: **MW03-724-081318** Matrix: Water Date Received:08.15.18 17.25
Lab Sample Id: 595905-002 Date Collected: 08.13.18 12.30

Analytical Method: VOCs by SW 8260B Prep Method: SW5030C
Tech: MNI % Solids:
Analyst: MNI Date Prep: 08.27.18 10.50
Seq Number: 3061308 SUB: AZ0765

Parameter	Cas Number	Result	RL	MDL	Units	Analysis Date	Flag	Dil
Propene	115-07-1	Not Present			ug/L	08.27.18 18.32	T4E8	1

Surrogate	% Recovery	Units	Limits	Analysis Date	Flag
4-Bromofluorobenzene	95	%	74-124	08.27.18 18.32	
Dibromofluoromethane	97	%	75-131	08.27.18 18.32	
1,2-Dichloroethane-D4	84	%	63-144	08.27.18 18.32	
Toluene-D8	93	%	80-117	08.27.18 18.32	

Analytical Method: Total Metals by SW 6010C Prep Method: SW3010A
Tech: MLI % Solids:
Analyst: DEP Date Prep: 08.23.18 09.30
Seq Number: 3061039 SUB: AZ0765

Parameter	Cas Number	Result	RL	MDL	Units	Analysis Date	Flag	Dil
Antimony	7440-36-0	**0.00593**	0.0200	0.00589	mg/L	08.23.18 22.36	E4	1
Arsenic	7440-38-2	<0.00550	0.0200	0.00550	mg/L	08.23.18 22.36	E8	1
Barium	7440-39-3	**0.0152**	0.0100	0.00135	mg/L	08.23.18 22.36		1
Cadmium	7440-43-9	<0.00243	0.0100	0.00243	mg/L	08.23.18 22.36	E8	1
Chromium	7440-47-3	<0.000811	0.0100	0.000811	mg/L	08.23.18 22.36	E8	1
Cobalt	7440-48-4	<0.000673	0.0100	0.000673	mg/L	08.23.18 22.36	E8	1
Copper	7440-50-8	<0.00544	0.0200	0.00544	mg/L	08.23.18 22.36	E8	1
Lead	7439-92-1	<0.00237	0.0150	0.00237	mg/L	08.23.18 22.36	E8	1
Nickel	7440-02-0	<0.00307	0.0100	0.00307	mg/L	08.23.18 22.36	E8	1
Selenium	7782-49-2	<0.00439	0.0300	0.00439	mg/L	08.23.18 22.36	E8	1
Silver	7440-22-4	<0.00559	0.0300	0.00559	mg/L	08.23.18 22.36	E8	1
Thallium	7440-28-0	<0.00621	0.0200	0.00621	mg/L	08.23.18 22.36	E8	1
Titanium	7440-32-6	<0.00156	0.180	0.00156	mg/L	08.23.18 22.36	E8	1
Vanadium	7440-62-2	<0.00518	0.0900	0.00518	mg/L	08.23.18 22.36	E8	1
Zinc	7440-66-6	**0.316**	0.0300	0.00391	mg/L	08.23.18 22.36		1

Certificate of Analytical Results 595905

AMEC Foster Wheeler, Phoenix, AZ

Cave Creek Landfill - Maricopa

Sample Id: **MW03-724-081318** Matrix: Water Date Received:08.15.18 17.25

Lab Sample Id: 595905-002 Date Collected: 08.13.18 12.30

Analytical Method: Alkalinity by SM 2320B

Tech: MON % Solids:

Analyst: TNL

Seq Number: 3060957

Parameter	Cas Number	Result	RL	MDL	Units	Analysis Date	Flag	Dil
Alkalinity, Total (CaCO3)	1640192	**156**	20.0	4.00	mg/L	08.22.18 15.00		1
Alkalinity, Bicarbonate (as CaCO3	471-34-1	**128**	20.0	4.00	mg/L	08.22.18 15.00		1
Alkalinity, Carbonate (as CaC	3812-32-6	**28.0**	20.0	4.00	mg/L	08.22.18 15.00		1
Alkalinity, Hydroxide (as CaCO	14280-30-9	<4.00	20.0	4.00	mg/L	08.22.18 15.00	E8	1

Analytical Method: Specific Conductance by SM 2510B

Tech: MON % Solids:

Analyst: TNL

Seq Number: 3060443

Parameter	Cas Number	Result	RL	MDL	Units	Analysis Date	Flag	Dil
Conductivity	COND	**310**	1.00	1.00	uS/cm	08.17.18 14.30		1

Analytical Method: TDS by SM 2540C

Tech: MON % Solids:

Analyst: TNL

Seq Number: 3060722

Parameter	Cas Number	Result	RL	MDL	Units	Analysis Date	Flag	Dil
Total Dissolved Solids	1642222	**180**	10.0	10.0	mg/L	08.17.18 10.00		1

Analytical Method: pH by SM 4500-H

Tech: MON % Solids:

Analyst: TNL

Seq Number: 3060445

Parameter	Cas Number	Result	RL	MDL	Units	Analysis Date	Flag	Dil
pH	12408-02-5	**8.96**	1.00	1.00	SU	08.17.18 11.15	H5	1
Temperature	TEMP	**23.0**	1.0	1.0	Deg C	08.17.18 11.15	H5	1

Certificate of Analytical Results 595905

AMEC Foster Wheeler, Phoenix, AZ

Cave Creek Landfill - Maricopa

Sample Id: **MW03-724-081318** Matrix: Water Date Received:08.15.18 17.25
Lab Sample Id: 595905-002 Date Collected: 08.13.18 12.30

Analytical Method: Inorganic Anions by EPA 300 Prep Method: E300P
Tech: MAB % Solids:
Analyst: MAB Date Prep: 08.24.18 15.40
Seq Number: 3061196 SUB: AZ0765

Parameter	Cas Number	Result	RL	MDL	Units	Analysis Date	Flag	Dil
Chloride	16887-00-6	**18.7**	0.500	0.0280	mg/L	08.24.18 22.39		1
Fluoride	16984-48-8	<0.0360	0.500	0.0360	mg/L	08.24.18 22.39		1
Sulfate	14808-79-8	**0.741**	0.500	0.0460	mg/L	08.24.18 22.39		1

Analytical Method: Nitrite by SM 4500-NO2B
Tech: MON % Solids:
Analyst: TNL
Seq Number: 3060350

Parameter	Cas Number	Result	RL	MDL	Units	Analysis Date	Flag	Dil
Nitrite as N	14797-65-0	<0.0100	0.0200	0.0100	mg/L	08.16.18 14.46	H3E8	1

Analytical Method: Nitrogen, Nitrate-Nitrite by EPA 353.2 Prep Method: E353.2P
Tech: KCS % Solids:
Analyst: KCS Date Prep: 08.21.18 09.30
Seq Number: 3060750 SUB: AZ0765

Parameter	Cas Number	Result	RL	MDL	Units	Analysis Date	Flag	Dil
Nitrate as N	14797-55-8	**0.0400**	0.100	0.0283	mg/L	08.21.18 12.18	E4	1
Nitrogen, Nitrate-Nitrite	7727-37-9	**0.0400**	0.100	0.0283	mg/L	08.21.18 12.18	E4	1

Certificate of Analytical Results 595905

AMEC Foster Wheeler, Phoenix, AZ

Cave Creek Landfill - Maricopa

Sample Id: **MW04-708-081318** Matrix: Water Date Received:08.15.18 17.25
Lab Sample Id: 595905-003 Date Collected: 08.13.18 09.00

Analytical Method: VOCs by SW 8260B Prep Method: SW5030C
Tech: MNI % Solids:
Analyst: MNI Date Prep: 08.27.18 10.50
Seq Number: 3061308 SUB: AZ0765

Parameter	Cas Number	Result	RL	MDL	Units	Analysis Date	Flag	Dil
1,1,1,2-Tetrachloroethane	630-20-6	<0.100	0.500	0.100	ug/L	08.27.18 18.59	E8	1
1,1,1-Trichloroethane	71-55-6	<0.200	0.500	0.200	ug/L	08.27.18 18.59	E8	1
1,1,2,2-Tetrachloroethane	79-34-5	<0.100	0.500	0.100	ug/L	08.27.18 18.59	E8	1
1,1,2-Trichloroethane	79-00-5	<0.0900	0.500	0.0900	ug/L	08.27.18 18.59	E8	1
1,1-Dichloroethane	75-34-3	<0.0700	0.500	0.0700	ug/L	08.27.18 18.59	E8	1
1,1-Dichloroethene	75-35-4	<0.200	0.500	0.200	ug/L	08.27.18 18.59	E8	1
1,1-Dichloropropene	563-58-6	<0.200	1.00	0.200	ug/L	08.27.18 18.59	E8	1
1,2,3-Trichlorobenzene	87-61-6	<0.200	5.00	0.200	ug/L	08.27.18 18.59	E8	1
1,2,3-Trichloropropane	96-18-4	<0.200	1.00	0.200	ug/L	08.27.18 18.59	E8	1
1,2,4-Trichlorobenzene	120-82-1	<0.0700	5.00	0.0700	ug/L	08.27.18 18.59	E8	1
1,2,4-Trimethylbenzene	95-63-6	<0.0700	2.00	0.0700	ug/L	08.27.18 18.59	E8	1
1,2-Dibromo-3-Chloropropane	96-12-8	<0.300	2.00	0.300	ug/L	08.27.18 18.59	E8	1
1,2-Dibromoethane	106-93-4	<0.200	0.500	0.200	ug/L	08.27.18 18.59	E8	1
1,2-Dichlorobenzene	95-50-1	<0.0800	1.50	0.0800	ug/L	08.27.18 18.59	E8	1
1,2-Dichloroethane	107-06-2	<0.100	0.500	0.100	ug/L	08.27.18 18.59	E8	1
1,2-Dichloropropane	78-87-5	<0.0900	0.500	0.0900	ug/L	08.27.18 18.59	E8	1
1,3,5-Trimethylbenzene	108-67-8	<0.0700	1.50	0.0700	ug/L	08.27.18 18.59	E8	1
1,3-Dichlorobenzene	541-73-1	<0.0600	1.50	0.0600	ug/L	08.27.18 18.59	E8	1
1,3-Dichloropropane	142-28-9	<0.0700	1.00	0.0700	ug/L	08.27.18 18.59	E8	1
1,4-Dichlorobenzene	106-46-7	<0.200	1.50	0.200	ug/L	08.27.18 18.59	E8	1
2,2-Dichloropropane	594-20-7	<0.200	0.500	0.200	ug/L	08.27.18 18.59	E8	1
2-Butanone	78-93-3	<0.300	5.00	0.300	ug/L	08.27.18 18.59	E8	1
2-Chlorotoluene	95-49-8	<0.0800	1.50	0.0800	ug/L	08.27.18 18.59	E8	1
2-Hexanone	591-78-6	<0.200	5.00	0.200	ug/L	08.27.18 18.59	L1E8	1
4-Chlorotoluene	106-43-4	<0.0700	2.00	0.0700	ug/L	08.27.18 18.59	E8	1
4-Methyl-2-Pentanone	108-10-1	<0.200	5.00	0.200	ug/L	08.27.18 18.59	L1E8	1
Acetone	67-64-1	**29.8**	20.0	0.600	ug/L	08.27.18 18.59		1
Benzene	71-43-2	<0.100	0.500	0.100	ug/L	08.27.18 18.59	E8	1
Bromobenzene	108-86-1	<0.0900	1.50	0.0900	ug/L	08.27.18 18.59	E8	1
Bromochloromethane	74-97-5	<0.200	0.500	0.200	ug/L	08.27.18 18.59	E8	1
Bromodichloromethane	75-27-4	<0.0800	0.500	0.0800	ug/L	08.27.18 18.59	E8	1
Bromoform	75-25-2	<0.100	1.00	0.100	ug/L	08.27.18 18.59	E8	1
Bromomethane	74-83-9	<0.300	5.00	0.300	ug/L	08.27.18 18.59	E8	1
Carbon Disulfide	75-15-0	<0.0900	0.500	0.0900	ug/L	08.27.18 18.59	E8	1
Carbon Tetrachloride	56-23-5	<0.200	0.500	0.200	ug/L	08.27.18 18.59	E8	1
Chlorobenzene	108-90-7	<0.0700	0.500	0.0700	ug/L	08.27.18 18.59	E8	1
Chloroethane	75-00-3	<0.600	4.00	0.600	ug/L	08.27.18 18.59	E8	1
Chloroform	67-66-3	<0.0700	0.500	0.0700	ug/L	08.27.18 18.59	E8	1

Certificate of Analytical Results 595905

AMEC Foster Wheeler, Phoenix, AZ

Cave Creek Landfill - Maricopa

Sample Id: **MW04-708-081318** Matrix: Water Date Received:08.15.18 17.25
Lab Sample Id: 595905-003 Date Collected: 08.13.18 09.00

Analytical Method: VOCs by SW 8260B Prep Method: SW5030C
Tech: MNI % Solids:
Analyst: MNI Date Prep: 08.27.18 10.50
Seq Number: 3061308 SUB: AZ0765

Parameter	Cas Number	Result	RL	MDL	Units	Analysis Date	Flag	Dil
Chloromethane	74-87-3	**8.55**	5.00	0.200	ug/L	08.27.18 18.59		1
cis-1,2-Dichloroethene	156-59-2	<0.200	0.500	0.200	ug/L	08.27.18 18.59	E8	1
cis-1,3-Dichloropropene	10061-01-5	<0.0800	1.00	0.0800	ug/L	08.27.18 18.59	E8	1
Dibromochloromethane	124-48-1	<0.0700	0.500	0.0700	ug/L	08.27.18 18.59	E8	1
Dibromomethane	74-95-3	<0.200	0.500	0.200	ug/L	08.27.18 18.59	E8	1
Dichlorodifluoromethane	75-71-8	<0.200	2.00	0.200	ug/L	08.27.18 18.59	E8	1
Ethylbenzene	100-41-4	<0.0900	2.00	0.0900	ug/L	08.27.18 18.59	E8	1
Hexachlorobutadiene	87-68-3	<0.200	5.00	0.200	ug/L	08.27.18 18.59	E8	1
Iodomethane (Methyl Iodide)	74-88-4	<0.300	2.00	0.300	ug/L	08.27.18 18.59	E8	1
isopropylbenzene	98-82-8	<0.0800	2.50	0.0800	ug/L	08.27.18 18.59	E8	1
m,p-Xylenes	179601-23-1	<0.0900	2.00	0.0900	ug/L	08.27.18 18.59	E8	1
Methylene Chloride	75-09-2	<0.200	3.00	0.200	ug/L	08.27.18 18.59	E8	1
MTBE	1634-04-4	<0.100	2.00	0.100	ug/L	08.27.18 18.59	E8	1
Naphthalene	91-20-3	<0.200	5.00	0.200	ug/L	08.27.18 18.59	E8	1
n-Butylbenzene	104-51-8	<0.200	2.50	0.200	ug/L	08.27.18 18.59	E8	1
n-Propylbenzene	103-65-1	<0.0800	2.00	0.0800	ug/L	08.27.18 18.59	E8	1
o-Xylene	95-47-6	<0.0900	1.00	0.0900	ug/L	08.27.18 18.59	E8	1
p-Cymene (p-Isopropyltoluene)	99-87-6	<0.100	1.50	0.100	ug/L	08.27.18 18.59	E8	1
Sec-Butylbenzene	135-98-8	<0.100	1.50	0.100	ug/L	08.27.18 18.59	E8	1
Styrene	100-42-5	<0.0800	1.00	0.0800	ug/L	08.27.18 18.59	E8	1
tert-Butylbenzene	98-06-6	<0.200	2.50	0.200	ug/L	08.27.18 18.59	E8	1
Tetrachloroethylene	127-18-4	<0.0800	0.500	0.0800	ug/L	08.27.18 18.59	E8	1
Toluene	108-88-3	<0.0700	2.00	0.0700	ug/L	08.27.18 18.59	E8	1
Total Trihalomethane		<0.0700	0.500	0.0700	ug/L	08.27.18 18.59	E8	1
Total Xylenes	1330-20-7	<0.0900	1.00	0.0900	ug/L	08.27.18 18.59	E8	1
trans-1,2-dichloroethene	156-60-5	<0.0900	0.500	0.0900	ug/L	08.27.18 18.59	E8	1
Trichloroethene	79-01-6	**0.440**	0.500	0.200	ug/L	08.27.18 18.59	E4	1
Trichlorofluoromethane	75-69-4	<0.400	2.00	0.400	ug/L	08.27.18 18.59	E8	1
Vinyl Acetate	108-05-4	<0.200	5.00	0.200	ug/L	08.27.18 18.59	E8	1
Vinyl Chloride	75-01-4	<0.100	0.500	0.100	ug/L	08.27.18 18.59	E8	1
trans-1,3-dichloropropene	10061-02-6	<0.0600	0.500	0.0600	ug/L	08.27.18 18.59	E8	1
1,1,2-Trichloro-1,2,2-Trifluoroethane	76-13-1	<0.300	5.00	0.300	ug/L	08.27.18 18.59	E8	1
1,3-Butadiene	106-99-0	<0.276	5.00	0.276	ug/L	08.27.18 18.59	E8	1
Cyclohexane	110-82-7	<0.115	5.00	0.115	ug/L	08.27.18 18.59	E8	1
Dicyclopentadiene	77-73-6	<0.0540	5.00	0.0540	ug/L	08.27.18 18.59	E8	1
Methylcyclohexane	108-87-2	<0.117	5.00	0.117	ug/L	08.27.18 18.59	E8	1
n-Hexane	110-54-3	<0.0920	5.00	0.0920	ug/L	08.27.18 18.59	E8	1
4-Ethyltoluene	622-96-8	Not Present			ug/L	08.27.18 18.59	T4E8	1

Certificate of Analytical Results 595905

AMEC Foster Wheeler, Phoenix, AZ

Cave Creek Landfill - Maricopa

Sample Id: **MW04-708-081318** Matrix: Water Date Received:08.15.18 17.25
Lab Sample Id: 595905-003 Date Collected: 08.13.18 09.00

Analytical Method: VOCs by SW 8260B Prep Method: SW5030C
Tech: MNI % Solids:
Analyst: MNI Date Prep: 08.27.18 10.50
Seq Number: 3061308 SUB: AZ0765

Parameter	Cas Number	Result	RL	MDL	Units	Analysis Date	Flag	Dil
Propene	115-07-1	Not Present			ug/L	08.27.18 18.59	T4E8	1

Surrogate	% Recovery	Units	Limits	Analysis Date	Flag
4-Bromofluorobenzene	93	%	74-124	08.27.18 18.59	
Dibromofluoromethane	86	%	75-131	08.27.18 18.59	
1,2-Dichloroethane-D4	83	%	63-144	08.27.18 18.59	
Toluene-D8	51	%	80-117	08.27.18 18.59	S6

Analytical Method: Total Metals by SW 6010C Prep Method: SW3010A
Tech: MLI % Solids:
Analyst: DEP Date Prep: 08.23.18 09.30
Seq Number: 3061039 SUB: AZ0765

Parameter	Cas Number	Result	RL	MDL	Units	Analysis Date	Flag	Dil
Antimony	7440-36-0	<0.00589	0.0200	0.00589	mg/L	08.23.18 22.49	E8	1
Arsenic	7440-38-2	<0.00550	0.0200	0.00550	mg/L	08.23.18 22.49	E8	1
Barium	7440-39-3	**0.00967**	0.0100	0.00135	mg/L	08.23.18 22.49	E4	1
Cadmium	7440-43-9	<0.00243	0.0100	0.00243	mg/L	08.23.18 22.49	E8	1
Chromium	7440-47-3	<0.000811	0.0100	0.000811	mg/L	08.23.18 22.49	E8	1
Cobalt	7440-48-4	<0.000673	0.0100	0.000673	mg/L	08.23.18 22.49	E8	1
Copper	7440-50-8	<0.00544	0.0200	0.00544	mg/L	08.23.18 22.49	E8	1
Lead	7439-92-1	<0.00237	0.0150	0.00237	mg/L	08.23.18 22.49	E8	1
Nickel	7440-02-0	<0.00307	0.0100	0.00307	mg/L	08.23.18 22.49	E8	1
Selenium	7782-49-2	**0.00736**	0.0300	0.00439	mg/L	08.23.18 22.49	E4	1
Silver	7440-22-4	<0.00559	0.0300	0.00559	mg/L	08.23.18 22.49	E8	1
Thallium	7440-28-0	<0.00621	0.0200	0.00621	mg/L	08.23.18 22.49	E8	1
Titanium	7440-32-6	<0.00156	0.180	0.00156	mg/L	08.23.18 22.49	E8	1
Vanadium	7440-62-2	**0.0106**	0.0900	0.00518	mg/L	08.23.18 22.49	E4	1
Zinc	7440-66-6	**0.296**	0.0300	0.00391	mg/L	08.23.18 22.49		1

Certificate of Analytical Results 595905

AMEC Foster Wheeler, Phoenix, AZ

Cave Creek Landfill - Maricopa

Sample Id: **MW04-708-081318** Matrix: Water Date Received:08.15.18 17.25
Lab Sample Id: 595905-003 Date Collected: 08.13.18 09.00

Analytical Method: Alkalinity by SM 2320B
Tech: MON % Solids:
Analyst: TNL
Seq Number: 3060957

Parameter	Cas Number	Result	RL	MDL	Units	Analysis Date	Flag	Dil
Alkalinity, Total (CaCO3)	1640192	**226**	20.0	4.00	mg/L	08.22.18 15.00		1
Alkalinity, Bicarbonate (as CaCO3	471-34-1	**226**	20.0	4.00	mg/L	08.22.18 15.00		1
Alkalinity, Carbonate (as CaCO3	3812-32-6	<4.00	20.0	4.00	mg/L	08.22.18 15.00	E8	1
Alkalinity, Hydroxide (as CaCO3	14280-30-9	<4.00	20.0	4.00	mg/L	08.22.18 15.00	E8	1

Analytical Method: Specific Conductance by SM 2510B
Tech: MON % Solids:
Analyst: TNL
Seq Number: 3060443

Parameter	Cas Number	Result	RL	MDL	Units	Analysis Date	Flag	Dil
Conductivity	COND	**496**	1.00	1.00	uS/cm	08.17.18 14.30		1

Analytical Method: TDS by SM 2540C
Tech: MON % Solids:
Analyst: TNL
Seq Number: 3060722

Parameter	Cas Number	Result	RL	MDL	Units	Analysis Date	Flag	Dil
Total Dissolved Solids	1642222	**294**	10.0	10.0	mg/L	08.17.18 10.00		1

Analytical Method: pH by SM 4500-H
Tech: MON % Solids:
Analyst: TNL
Seq Number: 3060445

Parameter	Cas Number	Result	RL	MDL	Units	Analysis Date	Flag	Dil
pH	12408-02-5	**7.41**	1.00	1.00	SU	08.17.18 11.15	H5	1
Temperature	TEMP	**23.7**	1.0	1.0	Deg C	08.17.18 11.15	H5	1

Certificate of Analytical Results 595905

AMEC Foster Wheeler, Phoenix, AZ

Cave Creek Landfill - Maricopa

Sample Id: **MW04-708-081318** Matrix: Water Date Received:08.15.18 17.25
Lab Sample Id: 595905-003 Date Collected: 08.13.18 09.00

Analytical Method: Inorganic Anions by EPA 300 Prep Method: E300P
Tech: MAB % Solids:
Analyst: MAB Date Prep: 08.24.18 15.40
Seq Number: 3061196 SUB: AZ0765

Parameter	Cas Number	Result	RL	MDL	Units	Analysis Date	Flag	Dil
Chloride	16887-00-6	**22.2**	0.500	0.0280	mg/L	08.24.18 22.50		1
Fluoride	16984-48-8	<0.0360	0.500	0.0360	mg/L	08.24.18 22.50		1
Sulfate	14808-79-8	**9.04**	0.500	0.0460	mg/L	08.24.18 22.50		1

Analytical Method: Nitrite by SM 4500-NO2B
Tech: MON % Solids:
Analyst: TNL
Seq Number: 3060350

Parameter	Cas Number	Result	RL	MDL	Units	Analysis Date	Flag	Dil
Nitrite as N	14797-65-0	**0.0241**	0.0200	0.0100	mg/L	08.16.18 14.46	H3	1

Analytical Method: Nitrogen, Nitrate-Nitrite by EPA 353.2 Prep Method: E353.2P
Tech: KCS % Solids:
Analyst: KCS Date Prep: 08.21.18 09.30
Seq Number: 3060750 SUB: AZ0765

Parameter	Cas Number	Result	RL	MDL	Units	Analysis Date	Flag	Dil
Nitrate as N	14797-55-8	**0.119**	0.100	0.0283	mg/L	08.21.18 12.20		1
Nitrogen, Nitrate-Nitrite	7727-37-9	**0.143**	0.100	0.0283	mg/L	08.21.18 12.20		1

Certificate of Analytical Results 595905

AMEC Foster Wheeler, Phoenix, AZ

Cave Creek Landfill - Maricopa

Sample Id: **MW05-704-081418** Matrix: Water Date Received:08.15.18 17.25
Lab Sample Id: 595905-004 Date Collected: 08.14.18 10.45

Analytical Method: VOCs by SW 8260B Prep Method: SW5030C
Tech: MNI % Solids:
Analyst: MNI Date Prep: 08.27.18 10.50
Seq Number: 3061308 SUB: AZ0765

Parameter	Cas Number	Result	RL	MDL	Units	Analysis Date	Flag	Dil
1,1,1,2-Tetrachloroethane	630-20-6	<0.100	0.500	0.100	ug/L	08.27.18 20.17	E8	1
1,1,1-Trichloroethane	71-55-6	<0.200	0.500	0.200	ug/L	08.27.18 20.17	E8	1
1,1,2,2-Tetrachloroethane	79-34-5	<0.100	0.500	0.100	ug/L	08.27.18 20.17	E8	1
1,1,2-Trichloroethane	79-00-5	<0.0900	0.500	0.0900	ug/L	08.27.18 20.17	E8	1
1,1-Dichloroethane	75-34-3	<0.0700	0.500	0.0700	ug/L	08.27.18 20.17	E8	1
1,1-Dichloroethene	75-35-4	<0.200	0.500	0.200	ug/L	08.27.18 20.17	E8	1
1,1-Dichloropropene	563-58-6	<0.200	1.00	0.200	ug/L	08.27.18 20.17	E8	1
1,2,3-Trichlorobenzene	87-61-6	<0.200	5.00	0.200	ug/L	08.27.18 20.17	E8	1
1,2,3-Trichloropropane	96-18-4	<0.200	1.00	0.200	ug/L	08.27.18 20.17	E8	1
1,2,4-Trichlorobenzene	120-82-1	<0.0700	5.00	0.0700	ug/L	08.27.18 20.17	E8	1
1,2,4-Trimethylbenzene	95-63-6	<0.0700	2.00	0.0700	ug/L	08.27.18 20.17	E8	1
1,2-Dibromo-3-Chloropropane	96-12-8	<0.300	2.00	0.300	ug/L	08.27.18 20.17	E8	1
1,2-Dibromoethane	106-93-4	<0.200	0.500	0.200	ug/L	08.27.18 20.17	E8	1
1,2-Dichlorobenzene	95-50-1	<0.0800	1.50	0.0800	ug/L	08.27.18 20.17	E8	1
1,2-Dichloroethane	107-06-2	<0.100	0.500	0.100	ug/L	08.27.18 20.17	E8	1
1,2-Dichloropropane	78-87-5	<0.0900	0.500	0.0900	ug/L	08.27.18 20.17	E8	1
1,3,5-Trimethylbenzene	108-67-8	<0.0700	1.50	0.0700	ug/L	08.27.18 20.17	E8	1
1,3-Dichlorobenzene	541-73-1	<0.0600	1.50	0.0600	ug/L	08.27.18 20.17	E8	1
1,3-Dichloropropane	142-28-9	<0.0700	1.00	0.0700	ug/L	08.27.18 20.17	E8	1
1,4-Dichlorobenzene	106-46-7	<0.200	1.50	0.200	ug/L	08.27.18 20.17	E8	1
2,2-Dichloropropane	594-20-7	<0.200	0.500	0.200	ug/L	08.27.18 20.17	E8	1
2-Butanone	78-93-3	<0.300	5.00	0.300	ug/L	08.27.18 20.17	E8	1
2-Chlorotoluene	95-49-8	<0.0800	1.50	0.0800	ug/L	08.27.18 20.17	E8	1
2-Hexanone	591-78-6	<0.200	5.00	0.200	ug/L	08.27.18 20.17	L1E8	1
4-Chlorotoluene	106-43-4	<0.0700	2.00	0.0700	ug/L	08.27.18 20.17	E8	1
4-Methyl-2-Pentanone	108-10-1	<0.200	5.00	0.200	ug/L	08.27.18 20.17	L1E8	1
Acetone	67-64-1	**67.8**	20.0	0.600	ug/L	08.27.18 20.17		1
Benzene	71-43-2	<0.100	0.500	0.100	ug/L	08.27.18 20.17	E8	1
Bromobenzene	108-86-1	<0.0900	1.50	0.0900	ug/L	08.27.18 20.17	E8	1
Bromochloromethane	74-97-5	<0.200	0.500	0.200	ug/L	08.27.18 20.17	E8	1
Bromodichloromethane	75-27-4	<0.0800	0.500	0.0800	ug/L	08.27.18 20.17	E8	1
Bromoform	75-25-2	<0.100	1.00	0.100	ug/L	08.27.18 20.17	E8	1
Bromomethane	74-83-9	<0.300	5.00	0.300	ug/L	08.27.18 20.17	E8	1
Carbon Disulfide	75-15-0	<0.0900	0.500	0.0900	ug/L	08.27.18 20.17	E8	1
Carbon Tetrachloride	56-23-5	<0.200	0.500	0.200	ug/L	08.27.18 20.17	E8	1
Chlorobenzene	108-90-7	<0.0700	0.500	0.0700	ug/L	08.27.18 20.17	E8	1
Chloroethane	75-00-3	<0.600	4.00	0.600	ug/L	08.27.18 20.17	E8	1
Chloroform	67-66-3	<0.0700	0.500	0.0700	ug/L	08.27.18 20.17	E8	1

Certificate of Analytical Results 595905

AMEC Foster Wheeler, Phoenix, AZ

Cave Creek Landfill - Maricopa

Sample Id: **MW05-704-081418** Matrix: Water Date Received:08.15.18 17.25

Lab Sample Id: 595905-004 Date Collected: 08.14.18 10.45

Analytical Method: VOCs by SW 8260B Prep Method: SW5030C

Tech: MNI % Solids:

Analyst: MNI Date Prep: 08.27.18 10.50

Seq Number: 3061308 SUB: AZ0765

Parameter	Cas Number	Result	RL	MDL	Units	Analysis Date	Flag	Dil
Chloromethane	74-87-3	**2.79**	5.00	0.200	ug/L	08.27.18 20.17	E4	1
cis-1,2-Dichloroethene	156-59-2	<0.200	0.500	0.200	ug/L	08.27.18 20.17	E8	1
cis-1,3-Dichloropropene	10061-01-5	<0.0800	1.00	0.0800	ug/L	08.27.18 20.17	E8	1
Dibromochloromethane	124-48-1	<0.0700	0.500	0.0700	ug/L	08.27.18 20.17	E8	1
Dibromomethane	74-95-3	<0.200	0.500	0.200	ug/L	08.27.18 20.17	E8	1
Dichlorodifluoromethane	75-71-8	<0.200	2.00	0.200	ug/L	08.27.18 20.17	E8	1
Ethylbenzene	100-41-4	<0.0900	2.00	0.0900	ug/L	08.27.18 20.17	E8	1
Hexachlorobutadiene	87-68-3	<0.200	5.00	0.200	ug/L	08.27.18 20.17	E8	1
Iodomethane (Methyl Iodide)	74-88-4	<0.300	2.00	0.300	ug/L	08.27.18 20.17	E8	1
isopropylbenzene	98-82-8	<0.0800	2.50	0.0800	ug/L	08.27.18 20.17	E8	1
m,p-Xylenes	179601-23-1	<0.0900	2.00	0.0900	ug/L	08.27.18 20.17	E8	1
Methylene Chloride	75-09-2	<0.200	3.00	0.200	ug/L	08.27.18 20.17	E8	1
MTBE	1634-04-4	<0.100	2.00	0.100	ug/L	08.27.18 20.17	E8	1
Naphthalene	91-20-3	<0.200	5.00	0.200	ug/L	08.27.18 20.17	E8	1
n-Butylbenzene	104-51-8	<0.200	2.50	0.200	ug/L	08.27.18 20.17	E8	1
n-Propylbenzene	103-65-1	<0.0800	2.00	0.0800	ug/L	08.27.18 20.17	E8	1
o-Xylene	95-47-6	<0.0900	1.00	0.0900	ug/L	08.27.18 20.17	E8	1
p-Cymene (p-Isopropyltoluene)	99-87-6	<0.100	1.50	0.100	ug/L	08.27.18 20.17	E8	1
Sec-Butylbenzene	135-98-8	<0.100	1.50	0.100	ug/L	08.27.18 20.17	E8	1
Styrene	100-42-5	<0.0800	1.00	0.0800	ug/L	08.27.18 20.17	E8	1
tert-Butylbenzene	98-06-6	<0.200	2.50	0.200	ug/L	08.27.18 20.17	E8	1
Tetrachloroethylene	127-18-4	**0.400**	0.500	0.0800	ug/L	08.27.18 20.17	E4	1
Toluene	108-88-3	<0.0700	2.00	0.0700	ug/L	08.27.18 20.17	E8	1
Total Trihalomethane		<0.0700	0.500	0.0700	ug/L	08.27.18 20.17	E8	1
Total Xylenes	1330-20-7	<0.0900	1.00	0.0900	ug/L	08.27.18 20.17	E8	1
trans-1,2-dichloroethene	156-60-5	<0.0900	0.500	0.0900	ug/L	08.27.18 20.17	E8	1
Trichloroethene	79-01-6	**42.4**	0.500	0.200	ug/L	08.27.18 20.17		1
Trichlorofluoromethane	75-69-4	<0.400	2.00	0.400	ug/L	08.27.18 20.17	E8	1
Vinyl Acetate	108-05-4	<0.200	5.00	0.200	ug/L	08.27.18 20.17	E8	1
Vinyl Chloride	75-01-4	<0.100	0.500	0.100	ug/L	08.27.18 20.17	E8	1
trans-1,3-dichloropropene	10061-02-6	<0.0600	0.500	0.0600	ug/L	08.27.18 20.17	E8	1
1,1,2-Trichloro-1,2,2-Trifluoroethane	76-13-1	<0.300	5.00	0.300	ug/L	08.27.18 20.17	E8	1
1,3-Butadiene	106-99-0	<0.276	5.00	0.276	ug/L	08.27.18 20.17	E8	1
Cyclohexane	110-82-7	<0.115	5.00	0.115	ug/L	08.27.18 20.17	E8	1
Dicyclopentadiene	77-73-6	<0.0540	5.00	0.0540	ug/L	08.27.18 20.17	E8	1
Methylcyclohexane	108-87-2	<0.117	5.00	0.117	ug/L	08.27.18 20.17	E8	1
n-Hexane	110-54-3	<0.0920	5.00	0.0920	ug/L	08.27.18 20.17	E8	1
4-Ethyltoluene	622-96-8	Not Present			ug/L	08.27.18 20.17	T4E8	1

Certificate of Analytical Results 595905

AMEC Foster Wheeler, Phoenix, AZ

Cave Creek Landfill - Maricopa

Sample Id: **MW05-704-081418** Matrix: Water Date Received:08.15.18 17.25
Lab Sample Id: 595905-004 Date Collected: 08.14.18 10.45

Analytical Method: VOCs by SW 8260B Prep Method: SW5030C
Tech: MNI % Solids:
Analyst: MNI Date Prep: 08.27.18 10.50
Seq Number: 3061308 SUB: AZ0765

Parameter	Cas Number	Result	RL	MDL	Units	Analysis Date	Flag	Dil
Propene	115-07-1	Not Present			ug/L	08.27.18 20.17	T4E8	1

Surrogate	% Recovery	Units	Limits	Analysis Date	Flag
4-Bromofluorobenzene	93	%	74-124	08.27.18 20.17	
Dibromofluoromethane	87	%	75-131	08.27.18 20.17	
1,2-Dichloroethane-D4	121	%	63-144	08.27.18 20.17	
Toluene-D8	85	%	80-117	08.27.18 20.17	

Analytical Method: Total Metals by SW 6010C Prep Method: SW3010A
Tech: MLI % Solids:
Analyst: DEP Date Prep: 08.23.18 09.30
Seq Number: 3061039 SUB: AZ0765

Parameter	Cas Number	Result	RL	MDL	Units	Analysis Date	Flag	Dil
Antimony	7440-36-0	<0.00589	0.0200	0.00589	mg/L	08.23.18 22.53	E8	1
Arsenic	7440-38-2	<0.00550	0.0200	0.00550	mg/L	08.23.18 22.53	E8	1
Barium	7440-39-3	**0.0133**	0.0100	0.00135	mg/L	08.23.18 22.53		1
Cadmium	7440-43-9	<0.00243	0.0100	0.00243	mg/L	08.23.18 22.53	E8	1
Chromium	7440-47-3	<0.000811	0.0100	0.000811	mg/L	08.23.18 22.53	E8	1
Cobalt	7440-48-4	<0.000673	0.0100	0.000673	mg/L	08.23.18 22.53	E8	1
Copper	7440-50-8	**0.00647**	0.0200	0.00544	mg/L	08.23.18 22.53	E4	1
Lead	7439-92-1	<0.00237	0.0150	0.00237	mg/L	08.23.18 22.53	E8	1
Nickel	7440-02-0	<0.00307	0.0100	0.00307	mg/L	08.23.18 22.53	E8	1
Selenium	7782-49-2	<0.00439	0.0300	0.00439	mg/L	08.23.18 22.53	E8	1
Silver	7440-22-4	<0.00559	0.0300	0.00559	mg/L	08.23.18 22.53	E8	1
Thallium	7440-28-0	<0.00621	0.0200	0.00621	mg/L	08.23.18 22.53	E8	1
Titanium	7440-32-6	<0.00156	0.180	0.00156	mg/L	08.23.18 22.53	E8	1
Vanadium	7440-62-2	**0.00600**	0.0900	0.00518	mg/L	08.23.18 22.53	E4	1
Zinc	7440-66-6	**0.426**	0.0300	0.00391	mg/L	08.23.18 22.53		1

Certificate of Analytical Results 595905

AMEC Foster Wheeler, Phoenix, AZ

Cave Creek Landfill - Maricopa

Sample Id: **MW05-704-081418** Matrix: Water Date Received:08.15.18 17.25

Lab Sample Id: 595905-004 Date Collected: 08.14.18 10.45

Analytical Method: Alkalinity by SM 2320B

Tech: MON % Solids:

Analyst: TNL

Seq Number: 3060957

Parameter	Cas Number	Result	RL	MDL	Units	Analysis Date	Flag	Dil
Alkalinity, Total (CaCO3)	1640192	**226**	20.0	4.00	mg/L	08.22.18 15.00		1
Alkalinity, Bicarbonate (as CaCO3	471-34-1	**226**	20.0	4.00	mg/L	08.22.18 15.00		1
Alkalinity, Carbonate (as CaCO3	3812-32-6	<4.00	20.0	4.00	mg/L	08.22.18 15.00	E8	1
Alkalinity, Hydroxide (as CaCO3	14280-30-9	<4.00	20.0	4.00	mg/L	08.22.18 15.00	E8	1

Analytical Method: Specific Conductance by SM 2510B

Tech: MON % Solids:

Analyst: TNL

Seq Number: 3060443

Parameter	Cas Number	Result	RL	MDL	Units	Analysis Date	Flag	Dil
Conductivity	COND	**474**	1.00	1.00	uS/cm	08.17.18 14.30		1

Analytical Method: TDS by SM 2540C

Tech: MON % Solids:

Analyst: TNL

Seq Number: 3060722

Parameter	Cas Number	Result	RL	MDL	Units	Analysis Date	Flag	Dil
Total Dissolved Solids	1642222	**298**	10.0	10.0	mg/L	08.17.18 10.00		1

Analytical Method: pH by SM 4500-H

Tech: MON % Solids:

Analyst: TNL

Seq Number: 3060445

Parameter	Cas Number	Result	RL	MDL	Units	Analysis Date	Flag	Dil
pH	12408-02-5	**7.83**	1.00	1.00	SU	08.17.18 11.15	H5	1
Temperature	TEMP	**22.8**	1.0	1.0	Deg C	08.17.18 11.15	H5	1

Certificate of Analytical Results 595905

AMEC Foster Wheeler, Phoenix, AZ

Cave Creek Landfill - Maricopa

Sample Id: **MW05-704-081418** Matrix: Water Date Received:08.15.18 17.25
Lab Sample Id: 595905-004 Date Collected: 08.14.18 10.45

Analytical Method: Inorganic Anions by EPA 300 Prep Method: E300P
Tech: MAB % Solids:
Analyst: MAB Date Prep: 08.24.18 15.40
Seq Number: 3061196 SUB: AZ0765

Parameter	Cas Number	Result	RL	MDL	Units	Analysis Date	Flag	Dil
Chloride	16887-00-6	**19.4**	0.500	0.0280	mg/L	08.24.18 23.01		1
Fluoride	16984-48-8	<0.0360	0.500	0.0360	mg/L	08.24.18 23.01		1
Sulfate	14808-79-8	**8.87**	0.500	0.0460	mg/L	08.24.18 23.01		1

Analytical Method: Nitrite by SM 4500-NO2B
Tech: MON % Solids:
Analyst: TNL
Seq Number: 3060350

Parameter	Cas Number	Result	RL	MDL	Units	Analysis Date	Flag	Dil
Nitrite as N	14797-65-0	<0.0100	0.0200	0.0100	mg/L	08.16.18 14.46	H3E8	1

Analytical Method: Nitrogen, Nitrate-Nitrite by EPA 353.2 Prep Method: E353.2P
Tech: KCS % Solids:
Analyst: KCS Date Prep: 08.21.18 09.30
Seq Number: 3060750 SUB: AZ0765

Parameter	Cas Number	Result	RL	MDL	Units	Analysis Date	Flag	Dil
Nitrate as N	14797-55-8	**0.0690**	0.100	0.0283	mg/L	08.21.18 12.21	E4	1
Nitrogen, Nitrate-Nitrite	7727-37-9	**0.0690**	0.100	0.0283	mg/L	08.21.18 12.21	E4	1

Certificate of Analytical Results 595905

AMEC Foster Wheeler, Phoenix, AZ

Cave Creek Landfill - Maricopa

Sample Id: **MW06-720-081318** Matrix: Water Date Received:08.15.18 17.25
Lab Sample Id: 595905-005 Date Collected: 08.13.18 11.00

Analytical Method: VOCs by SW 8260B Prep Method: SW5030C
Tech: MNI % Solids:
Analyst: MNI Date Prep: 08.27.18 10.50
Seq Number: 3061308 SUB: AZ0765

Parameter	Cas Number	Result	RL	MDL	Units	Analysis Date	Flag	Dil
1,1,1,2-Tetrachloroethane	630-20-6	<0.100	0.500	0.100	ug/L	08.27.18 19.25	E8	1
1,1,1-Trichloroethane	71-55-6	<0.200	0.500	0.200	ug/L	08.27.18 19.25	E8	1
1,1,2,2-Tetrachloroethane	79-34-5	<0.100	0.500	0.100	ug/L	08.27.18 19.25	E8	1
1,1,2-Trichloroethane	79-00-5	<0.0900	0.500	0.0900	ug/L	08.27.18 19.25	E8	1
1,1-Dichloroethane	75-34-3	<0.0700	0.500	0.0700	ug/L	08.27.18 19.25	E8	1
1,1-Dichloroethene	75-35-4	<0.200	0.500	0.200	ug/L	08.27.18 19.25	E8	1
1,1-Dichloropropene	563-58-6	<0.200	1.00	0.200	ug/L	08.27.18 19.25	E8	1
1,2,3-Trichlorobenzene	87-61-6	<0.200	5.00	0.200	ug/L	08.27.18 19.25	E8	1
1,2,3-Trichloropropane	96-18-4	<0.200	1.00	0.200	ug/L	08.27.18 19.25	E8	1
1,2,4-Trichlorobenzene	120-82-1	<0.0700	5.00	0.0700	ug/L	08.27.18 19.25	E8	1
1,2,4-Trimethylbenzene	95-63-6	<0.0700	2.00	0.0700	ug/L	08.27.18 19.25	E8	1
1,2-Dibromo-3-Chloropropane	96-12-8	<0.300	2.00	0.300	ug/L	08.27.18 19.25	E8	1
1,2-Dibromoethane	106-93-4	<0.200	0.500	0.200	ug/L	08.27.18 19.25	E8	1
1,2-Dichlorobenzene	95-50-1	<0.0800	1.50	0.0800	ug/L	08.27.18 19.25	E8	1
1,2-Dichloroethane	107-06-2	<0.100	0.500	0.100	ug/L	08.27.18 19.25	E8	1
1,2-Dichloropropane	78-87-5	<0.0900	0.500	0.0900	ug/L	08.27.18 19.25	E8	1
1,3,5-Trimethylbenzene	108-67-8	<0.0700	1.50	0.0700	ug/L	08.27.18 19.25	E8	1
1,3-Dichlorobenzene	541-73-1	<0.0600	1.50	0.0600	ug/L	08.27.18 19.25	E8	1
1,3-Dichloropropane	142-28-9	<0.0700	1.00	0.0700	ug/L	08.27.18 19.25	E8	1
1,4-Dichlorobenzene	106-46-7	<0.200	1.50	0.200	ug/L	08.27.18 19.25	E8	1
2,2-Dichloropropane	594-20-7	<0.200	0.500	0.200	ug/L	08.27.18 19.25	E8	1
2-Butanone	78-93-3	<0.300	5.00	0.300	ug/L	08.27.18 19.25	E8	1
2-Chlorotoluene	95-49-8	<0.0800	1.50	0.0800	ug/L	08.27.18 19.25	E8	1
2-Hexanone	591-78-6	<0.200	5.00	0.200	ug/L	08.27.18 19.25	L1E8	1
4-Chlorotoluene	106-43-4	<0.0700	2.00	0.0700	ug/L	08.27.18 19.25	E8	1
4-Methyl-2-Pentanone	108-10-1	<0.200	5.00	0.200	ug/L	08.27.18 19.25	L1E8	1
Acetone	67-64-1	**4.24**	20.0	0.600	ug/L	08.27.18 19.25	E4	1
Benzene	71-43-2	<0.100	0.500	0.100	ug/L	08.27.18 19.25	E8	1
Bromobenzene	108-86-1	<0.0900	1.50	0.0900	ug/L	08.27.18 19.25	E8	1
Bromochloromethane	74-97-5	<0.200	0.500	0.200	ug/L	08.27.18 19.25	E8	1
Bromodichloromethane	75-27-4	<0.0800	0.500	0.0800	ug/L	08.27.18 19.25	E8	1
Bromoform	75-25-2	<0.100	1.00	0.100	ug/L	08.27.18 19.25	E8	1
Bromomethane	74-83-9	<0.300	5.00	0.300	ug/L	08.27.18 19.25	E8	1
Carbon Disulfide	75-15-0	<0.0900	0.500	0.0900	ug/L	08.27.18 19.25	E8	1
Carbon Tetrachloride	56-23-5	<0.200	0.500	0.200	ug/L	08.27.18 19.25	E8	1
Chlorobenzene	108-90-7	<0.0700	0.500	0.0700	ug/L	08.27.18 19.25	E8	1
Chloroethane	75-00-3	<0.600	4.00	0.600	ug/L	08.27.18 19.25	E8	1
Chloroform	67-66-3	<0.0700	0.500	0.0700	ug/L	08.27.18 19.25	E8	1

Certificate of Analytical Results 595905

AMEC Foster Wheeler, Phoenix, AZ

Cave Creek Landfill - Maricopa

Sample Id: **MW06-720-081318** Matrix: Water Date Received:08.15.18 17.25
Lab Sample Id: 595905-005 Date Collected: 08.13.18 11.00

Analytical Method: VOCs by SW 8260B Prep Method: SW5030C
Tech: MNI % Solids:
Analyst: MNI Date Prep: 08.27.18 10.50
Seq Number: 3061308 SUB: AZ0765

Parameter	Cas Number	Result	RL	MDL	Units	Analysis Date	Flag	Dil
Chloromethane	74-87-3	<0.200	5.00	0.200	ug/L	08.27.18 19.25	E8	1
cis-1,2-Dichloroethene	156-59-2	<0.200	0.500	0.200	ug/L	08.27.18 19.25	E8	1
cis-1,3-Dichloropropene	10061-01-5	<0.0800	1.00	0.0800	ug/L	08.27.18 19.25	E8	1
Dibromochloromethane	124-48-1	<0.0700	0.500	0.0700	ug/L	08.27.18 19.25	E8	1
Dibromomethane	74-95-3	<0.200	0.500	0.200	ug/L	08.27.18 19.25	E8	1
Dichlorodifluoromethane	75-71-8	<0.200	2.00	0.200	ug/L	08.27.18 19.25	E8	1
Ethylbenzene	100-41-4	<0.0900	2.00	0.0900	ug/L	08.27.18 19.25	E8	1
Hexachlorobutadiene	87-68-3	<0.200	5.00	0.200	ug/L	08.27.18 19.25	E8	1
Iodomethane (Methyl Iodide)	74-88-4	<0.300	2.00	0.300	ug/L	08.27.18 19.25	E8	1
isopropylbenzene	98-82-8	<0.0800	2.50	0.0800	ug/L	08.27.18 19.25	E8	1
m,p-Xylenes	179601-23-1	<0.0900	2.00	0.0900	ug/L	08.27.18 19.25	E8	1
Methylene Chloride	75-09-2	<0.200	3.00	0.200	ug/L	08.27.18 19.25	E8	1
MTBE	1634-04-4	<0.100	2.00	0.100	ug/L	08.27.18 19.25	E8	1
Naphthalene	91-20-3	<0.200	5.00	0.200	ug/L	08.27.18 19.25	E8	1
n-Butylbenzene	104-51-8	<0.200	2.50	0.200	ug/L	08.27.18 19.25	E8	1
n-Propylbenzene	103-65-1	<0.0800	2.00	0.0800	ug/L	08.27.18 19.25	E8	1
o-Xylene	95-47-6	<0.0900	1.00	0.0900	ug/L	08.27.18 19.25	E8	1
p-Cymene (p-Isopropyltoluene)	99-87-6	<0.100	1.50	0.100	ug/L	08.27.18 19.25	E8	1
Sec-Butylbenzene	135-98-8	<0.100	1.50	0.100	ug/L	08.27.18 19.25	E8	1
Styrene	100-42-5	<0.0800	1.00	0.0800	ug/L	08.27.18 19.25	E8	1
tert-Butylbenzene	98-06-6	<0.200	2.50	0.200	ug/L	08.27.18 19.25	E8	1
Tetrachloroethylene	127-18-4	<0.0800	0.500	0.0800	ug/L	08.27.18 19.25	E8	1
Toluene	108-88-3	<0.0700	2.00	0.0700	ug/L	08.27.18 19.25	E8	1
Total Trihalomethane		<0.0700	0.500	0.0700	ug/L	08.27.18 19.25	E8	1
Total Xylenes	1330-20-7	<0.0900	1.00	0.0900	ug/L	08.27.18 19.25	E8	1
trans-1,2-dichloroethene	156-60-5	<0.0900	0.500	0.0900	ug/L	08.27.18 19.25	E8	1
Trichloroethene	79-01-6	**1.08**	0.500	0.200	ug/L	08.27.18 19.25		1
Trichlorofluoromethane	75-69-4	<0.400	2.00	0.400	ug/L	08.27.18 19.25	E8	1
Vinyl Acetate	108-05-4	<0.200	5.00	0.200	ug/L	08.27.18 19.25	E8	1
Vinyl Chloride	75-01-4	<0.100	0.500	0.100	ug/L	08.27.18 19.25	E8	1
trans-1,3-dichloropropene	10061-02-6	<0.0600	0.500	0.0600	ug/L	08.27.18 19.25	E8	1
1,1,2-Trichloro-1,2,2-Trifluoroethane	76-13-1	<0.300	5.00	0.300	ug/L	08.27.18 19.25	E8	1
1,3-Butadiene	106-99-0	<0.276	5.00	0.276	ug/L	08.27.18 19.25	E8	1
Cyclohexane	110-82-7	<0.115	5.00	0.115	ug/L	08.27.18 19.25	E8	1
Dicyclopentadiene	77-73-6	<0.0540	5.00	0.0540	ug/L	08.27.18 19.25	E8	1
Methylcyclohexane	108-87-2	<0.117	5.00	0.117	ug/L	08.27.18 19.25	E8	1
n-Hexane	110-54-3	<0.0920	5.00	0.0920	ug/L	08.27.18 19.25	E8	1
4-Ethyltoluene	622-96-8	Not Present			ug/L	08.27.18 19.25	T4E8	1

Certificate of Analytical Results 595905

AMEC Foster Wheeler, Phoenix, AZ

Cave Creek Landfill - Maricopa

Sample Id: **MW06-720-081318** Matrix: Water Date Received:08.15.18 17.25
Lab Sample Id: 595905-005 Date Collected: 08.13.18 11.00

Analytical Method: VOCs by SW 8260B Prep Method: SW5030C
Tech: MNI % Solids:
Analyst: MNI Date Prep: 08.27.18 10.50
Seq Number: 3061308 SUB: AZ0765

Parameter	Cas Number	Result	RL	MDL	Units	Analysis Date	Flag	Dil
Propene	115-07-1	Not Present			ug/L	08.27.18 19.25	T4E8	1

Surrogate	% Recovery	Units	Limits	Analysis Date	Flag
4-Bromofluorobenzene	83	%	74-124	08.27.18 19.25	
Dibromofluoromethane	88	%	75-131	08.27.18 19.25	
1,2-Dichloroethane-D4	76	%	63-144	08.27.18 19.25	
Toluene-D8	86	%	80-117	08.27.18 19.25	

Analytical Method: Total Metals by SW 6010C Prep Method: SW3010A
Tech: MLI % Solids:
Analyst: DEP Date Prep: 08.23.18 09.30
Seq Number: 3061039 SUB: AZ0765

Parameter	Cas Number	Result	RL	MDL	Units	Analysis Date	Flag	Dil
Antimony	7440-36-0	<0.00589	0.0200	0.00589	mg/L	08.23.18 22.57	E8	1
Arsenic	7440-38-2	<0.00550	0.0200	0.00550	mg/L	08.23.18 22.57	E8	1
Barium	7440-39-3	**0.00691**	0.0100	0.00135	mg/L	08.23.18 22.57	E4	1
Cadmium	7440-43-9	<0.00243	0.0100	0.00243	mg/L	08.23.18 22.57	E8	1
Chromium	7440-47-3	<0.000811	0.0100	0.000811	mg/L	08.23.18 22.57	E8	1
Cobalt	7440-48-4	<0.000673	0.0100	0.000673	mg/L	08.23.18 22.57	E8	1
Copper	7440-50-8	<0.00544	0.0200	0.00544	mg/L	08.23.18 22.57	E8	1
Lead	7439-92-1	<0.00237	0.0150	0.00237	mg/L	08.23.18 22.57	E8	1
Nickel	7440-02-0	<0.00307	0.0100	0.00307	mg/L	08.23.18 22.57	E8	1
Selenium	7782-49-2	<0.00439	0.0300	0.00439	mg/L	08.23.18 22.57	E8	1
Silver	7440-22-4	<0.00559	0.0300	0.00559	mg/L	08.23.18 22.57	E8	1
Thallium	7440-28-0	<0.00621	0.0200	0.00621	mg/L	08.23.18 22.57	E8	1
Titanium	7440-32-6	<0.00156	0.180	0.00156	mg/L	08.23.18 22.57	E8	1
Vanadium	7440-62-2	<0.00518	0.0900	0.00518	mg/L	08.23.18 22.57	E8	1
Zinc	7440-66-6	**0.305**	0.0300	0.00391	mg/L	08.23.18 22.57		1

Certificate of Analytical Results 595905

AMEC Foster Wheeler, Phoenix, AZ

Cave Creek Landfill - Maricopa

Sample Id: **MW06-720-081318** Matrix: Water Date Received:08.15.18 17.25

Lab Sample Id: 595905-005 Date Collected: 08.13.18 11.00

Analytical Method: Alkalinity by SM 2320B

Tech: MON % Solids:

Analyst: TNL

Seq Number: 3060957

Parameter	Cas Number	Result	RL	MDL	Units	Analysis Date	Flag	Dil
Alkalinity, Total (CaCO3)	1640192	**236**	20.0	4.00	mg/L	08.22.18 15.00		1
Alkalinity, Bicarbonate (as CaCO3	471-34-1	**236**	20.0	4.00	mg/L	08.22.18 15.00		1
Alkalinity, Carbonate (as CaCO3	3812-32-6	<4.00	20.0	4.00	mg/L	08.22.18 15.00	E8	1
Alkalinity, Hydroxide (as CaCO3	14280-30-9	<4.00	20.0	4.00	mg/L	08.22.18 15.00	E8	1

Analytical Method: Specific Conductance by SM 2510B

Tech: MON % Solids:

Analyst: TNL

Seq Number: 3060443

Parameter	Cas Number	Result	RL	MDL	Units	Analysis Date	Flag	Dil
Conductivity	COND	**450**	1.00	1.00	uS/cm	08.17.18 14.30		1

Analytical Method: TDS by SM 2540C

Tech: MON % Solids:

Analyst: TNL

Seq Number: 3060722

Parameter	Cas Number	Result	RL	MDL	Units	Analysis Date	Flag	Dil
Total Dissolved Solids	1642222	**271**	10.0	10.0	mg/L	08.17.18 10.00		1

Analytical Method: pH by SM 4500-H

Tech: MON % Solids:

Analyst: TNL

Seq Number: 3060445

Parameter	Cas Number	Result	RL	MDL	Units	Analysis Date	Flag	Dil
pH	12408-02-5	**8.29**	1.00	1.00	SU	08.17.18 11.15	H5	1
Temperature	TEMP	**22.8**	1.0	1.0	Deg C	08.17.18 11.15	H5	1

Certificate of Analytical Results 595905

AMEC Foster Wheeler, Phoenix, AZ

Cave Creek Landfill - Maricopa

Sample Id: **MW06-720-081318** Matrix: Water Date Received:08.15.18 17.25
Lab Sample Id: 595905-005 Date Collected: 08.13.18 11.00

Analytical Method: Inorganic Anions by EPA 300 Prep Method: E300P
Tech: MAB % Solids:
Analyst: MAB Date Prep: 08.24.18 15.40
Seq Number: 3061196 SUB: AZ0765

Parameter	Cas Number	Result	RL	MDL	Units	Analysis Date	Flag	Dil
Chloride	16887-00-6	**17.3**	0.500	0.0280	mg/L	08.24.18 23.13		1
Fluoride	16984-48-8	<0.0360	0.500	0.0360	mg/L	08.24.18 23.13		1
Sulfate	14808-79-8	**20.4**	0.500	0.0460	mg/L	08.24.18 23.13		1

Analytical Method: Nitrite by SM 4500-NO2B
Tech: MON % Solids:
Analyst: TNL
Seq Number: 3060350

Parameter	Cas Number	Result	RL	MDL	Units	Analysis Date	Flag	Dil
Nitrite as N	14797-65-0	**0.0100**	0.0200	0.0100	mg/L	08.16.18 14.46	H3E4	1

Analytical Method: Nitrogen, Nitrate-Nitrite by EPA 353.2 Prep Method: E353.2P
Tech: KCS % Solids:
Analyst: KCS Date Prep: 08.21.18 09.30
Seq Number: 3060750 SUB: AZ0765

Parameter	Cas Number	Result	RL	MDL	Units	Analysis Date	Flag	Dil
Nitrate as N	14797-55-8	**0.0920**	0.100	0.0283	mg/L	08.21.18 12.23		1
Nitrogen, Nitrate-Nitrite	7727-37-9	**0.102**	0.100	0.0283	mg/L	08.21.18 12.23		1

Certificate of Analytical Results 595905

AMEC Foster Wheeler, Phoenix, AZ

Cave Creek Landfill - Maricopa

Sample Id: **MW07-718-081318** Matrix: Water Date Received:08.15.18 17.25
Lab Sample Id: 595905-006 Date Collected: 08.13.18 10.00

Analytical Method: VOCs by SW 8260B Prep Method: SW5030C
Tech: MNI % Solids:
Analyst: MNI Date Prep: 08.27.18 10.50
Seq Number: 3061308 SUB: AZ0765

Parameter	Cas Number	Result	RL	MDL	Units	Analysis Date	Flag	Dil
1,1,1,2-Tetrachloroethane	630-20-6	<0.100	0.500	0.100	ug/L	08.27.18 19.51	E8	1
1,1,1-Trichloroethane	71-55-6	<0.200	0.500	0.200	ug/L	08.27.18 19.51	E8	1
1,1,2,2-Tetrachloroethane	79-34-5	<0.100	0.500	0.100	ug/L	08.27.18 19.51	E8	1
1,1,2-Trichloroethane	79-00-5	<0.0900	0.500	0.0900	ug/L	08.27.18 19.51	E8	1
1,1-Dichloroethane	75-34-3	<0.0700	0.500	0.0700	ug/L	08.27.18 19.51	E8	1
1,1-Dichloroethene	75-35-4	<0.200	0.500	0.200	ug/L	08.27.18 19.51	E8	1
1,1-Dichloropropene	563-58-6	<0.200	1.00	0.200	ug/L	08.27.18 19.51	E8	1
1,2,3-Trichlorobenzene	87-61-6	<0.200	5.00	0.200	ug/L	08.27.18 19.51	E8	1
1,2,3-Trichloropropane	96-18-4	<0.200	1.00	0.200	ug/L	08.27.18 19.51	E8	1
1,2,4-Trichlorobenzene	120-82-1	<0.0700	5.00	0.0700	ug/L	08.27.18 19.51	E8	1
1,2,4-Trimethylbenzene	95-63-6	<0.0700	2.00	0.0700	ug/L	08.27.18 19.51	E8	1
1,2-Dibromo-3-Chloropropane	96-12-8	<0.300	2.00	0.300	ug/L	08.27.18 19.51	E8	1
1,2-Dibromoethane	106-93-4	<0.200	0.500	0.200	ug/L	08.27.18 19.51	E8	1
1,2-Dichlorobenzene	95-50-1	<0.0800	1.50	0.0800	ug/L	08.27.18 19.51	E8	1
1,2-Dichloroethane	107-06-2	<0.100	0.500	0.100	ug/L	08.27.18 19.51	E8	1
1,2-Dichloropropane	78-87-5	<0.0900	0.500	0.0900	ug/L	08.27.18 19.51	E8	1
1,3,5-Trimethylbenzene	108-67-8	<0.0700	1.50	0.0700	ug/L	08.27.18 19.51	E8	1
1,3-Dichlorobenzene	541-73-1	<0.0600	1.50	0.0600	ug/L	08.27.18 19.51	E8	1
1,3-Dichloropropane	142-28-9	<0.0700	1.00	0.0700	ug/L	08.27.18 19.51	E8	1
1,4-Dichlorobenzene	106-46-7	<0.200	1.50	0.200	ug/L	08.27.18 19.51	E8	1
2,2-Dichloropropane	594-20-7	<0.200	0.500	0.200	ug/L	08.27.18 19.51	E8	1
2-Butanone	78-93-3	<0.300	5.00	0.300	ug/L	08.27.18 19.51	E8	1
2-Chlorotoluene	95-49-8	<0.0800	1.50	0.0800	ug/L	08.27.18 19.51	E8	1
2-Hexanone	591-78-6	<0.200	5.00	0.200	ug/L	08.27.18 19.51	L1E8	1
4-Chlorotoluene	106-43-4	<0.0700	2.00	0.0700	ug/L	08.27.18 19.51	E8	1
4-Methyl-2-Pentanone	108-10-1	<0.200	5.00	0.200	ug/L	08.27.18 19.51	L1E8	1
Acetone	67-64-1	**58.3**	20.0	0.600	ug/L	08.27.18 19.51		1
Benzene	71-43-2	<0.100	0.500	0.100	ug/L	08.27.18 19.51	E8	1
Bromobenzene	108-86-1	<0.0900	1.50	0.0900	ug/L	08.27.18 19.51	E8	1
Bromochloromethane	74-97-5	<0.200	0.500	0.200	ug/L	08.27.18 19.51	E8	1
Bromodichloromethane	75-27-4	<0.0800	0.500	0.0800	ug/L	08.27.18 19.51	E8	1
Bromoform	75-25-2	<0.100	1.00	0.100	ug/L	08.27.18 19.51	E8	1
Bromomethane	74-83-9	<0.300	5.00	0.300	ug/L	08.27.18 19.51	E8	1
Carbon Disulfide	75-15-0	<0.0900	0.500	0.0900	ug/L	08.27.18 19.51	E8	1
Carbon Tetrachloride	56-23-5	<0.200	0.500	0.200	ug/L	08.27.18 19.51	E8	1
Chlorobenzene	108-90-7	<0.0700	0.500	0.0700	ug/L	08.27.18 19.51	E8	1
Chloroethane	75-00-3	<0.600	4.00	0.600	ug/L	08.27.18 19.51	E8	1
Chloroform	67-66-3	<0.0700	0.500	0.0700	ug/L	08.27.18 19.51	E8	1

Certificate of Analytical Results 595905

AMEC Foster Wheeler, Phoenix, AZ

Cave Creek Landfill - Maricopa

Sample Id: **MW07-718-081318** Matrix: Water Date Received:08.15.18 17.25
Lab Sample Id: 595905-006 Date Collected: 08.13.18 10.00

Analytical Method: VOCs by SW 8260B Prep Method: SW5030C
Tech: MNI % Solids:
Analyst: MNI Date Prep: 08.27.18 10.50
Seq Number: 3061308 SUB: AZ0765

Parameter	Cas Number	Result	RL	MDL	Units	Analysis Date	Flag	Dil
Chloromethane	74-87-3	**1.20**	5.00	0.200	ug/L	08.27.18 19.51	E4	1
cis-1,2-Dichloroethene	156-59-2	**2.54**	0.500	0.200	ug/L	08.27.18 19.51		1
cis-1,3-Dichloropropene	10061-01-5	<0.0800	1.00	0.0800	ug/L	08.27.18 19.51	E8	1
Dibromochloromethane	124-48-1	<0.0700	0.500	0.0700	ug/L	08.27.18 19.51	E8	1
Dibromomethane	74-95-3	<0.200	0.500	0.200	ug/L	08.27.18 19.51	E8	1
Dichlorodifluoromethane	75-71-8	<0.200	2.00	0.200	ug/L	08.27.18 19.51	E8	1
Ethylbenzene	100-41-4	<0.0900	2.00	0.0900	ug/L	08.27.18 19.51	E8	1
Hexachlorobutadiene	87-68-3	<0.200	5.00	0.200	ug/L	08.27.18 19.51	E8	1
Iodomethane (Methyl Iodide)	74-88-4	<0.300	2.00	0.300	ug/L	08.27.18 19.51	E8	1
isopropylbenzene	98-82-8	<0.0800	2.50	0.0800	ug/L	08.27.18 19.51	E8	1
m,p-Xylenes	179601-23-1	<0.0900	2.00	0.0900	ug/L	08.27.18 19.51	E8	1
Methylene Chloride	75-09-2	<0.200	3.00	0.200	ug/L	08.27.18 19.51	E8	1
MTBE	1634-04-4	<0.100	2.00	0.100	ug/L	08.27.18 19.51	E8	1
Naphthalene	91-20-3	<0.200	5.00	0.200	ug/L	08.27.18 19.51	E8	1
n-Butylbenzene	104-51-8	<0.200	2.50	0.200	ug/L	08.27.18 19.51	E8	1
n-Propylbenzene	103-65-1	<0.0800	2.00	0.0800	ug/L	08.27.18 19.51	E8	1
o-Xylene	95-47-6	<0.0900	1.00	0.0900	ug/L	08.27.18 19.51	E8	1
p-Cymene (p-Isopropyltoluene)	99-87-6	<0.100	1.50	0.100	ug/L	08.27.18 19.51	E8	1
Sec-Butylbenzene	135-98-8	<0.100	1.50	0.100	ug/L	08.27.18 19.51	E8	1
Styrene	100-42-5	<0.0800	1.00	0.0800	ug/L	08.27.18 19.51	E8	1
tert-Butylbenzene	98-06-6	<0.200	2.50	0.200	ug/L	08.27.18 19.51	E8	1
Tetrachloroethylene	127-18-4	**0.710**	0.500	0.0800	ug/L	08.27.18 19.51		1
Toluene	108-88-3	<0.0700	2.00	0.0700	ug/L	08.27.18 19.51	E8	1
Total Trihalomethane		<0.0700	0.500	0.0700	ug/L	08.27.18 19.51	E8	1
Total Xylenes	1330-20-7	<0.0900	1.00	0.0900	ug/L	08.27.18 19.51	E8	1
trans-1,2-dichloroethene	156-60-5	<0.0900	0.500	0.0900	ug/L	08.27.18 19.51	E8	1
Trichloroethene	79-01-6	**36.2**	0.500	0.200	ug/L	08.27.18 19.51		1
Trichlorofluoromethane	75-69-4	<0.400	2.00	0.400	ug/L	08.27.18 19.51	E8	1
Vinyl Acetate	108-05-4	<0.200	5.00	0.200	ug/L	08.27.18 19.51	E8	1
Vinyl Chloride	75-01-4	<0.100	0.500	0.100	ug/L	08.27.18 19.51	E8	1
trans-1,3-dichloropropene	10061-02-6	<0.0600	0.500	0.0600	ug/L	08.27.18 19.51	E8	1
1,1,2-Trichloro-1,2,2-Trifluoroethane	76-13-1	<0.300	5.00	0.300	ug/L	08.27.18 19.51	E8	1
1,3-Butadiene	106-99-0	<0.276	5.00	0.276	ug/L	08.27.18 19.51	E8	1
Cyclohexane	110-82-7	<0.115	5.00	0.115	ug/L	08.27.18 19.51	E8	1
Dicyclopentadiene	77-73-6	<0.0540	5.00	0.0540	ug/L	08.27.18 19.51	E8	1
Methylcyclohexane	108-87-2	<0.117	5.00	0.117	ug/L	08.27.18 19.51	E8	1
n-Hexane	110-54-3	<0.0920	5.00	0.0920	ug/L	08.27.18 19.51	E8	1
4-Ethyltoluene	622-96-8	Not Present			ug/L	08.27.18 19.51	T4E8	1

Certificate of Analytical Results 595905

AMEC Foster Wheeler, Phoenix, AZ

Cave Creek Landfill - Maricopa

Sample Id: **MW07-718-081318** Matrix: Water Date Received:08.15.18 17.25
Lab Sample Id: 595905-006 Date Collected: 08.13.18 10.00

Analytical Method: VOCs by SW 8260B Prep Method: SW5030C
Tech: MNI % Solids:
Analyst: MNI Date Prep: 08.27.18 10.50
Seq Number: 3061308 SUB: AZ0765

Parameter	Cas Number	Result	RL	MDL	Units	Analysis Date	Flag	Dil
Propene	115-07-1	Not Present			ug/L	08.27.18 19.51	T4E8	1

Surrogate	% Recovery	Units	Limits	Analysis Date	Flag
4-Bromofluorobenzene	88	%	74-124	08.27.18 19.51	
Dibromofluoromethane	95	%	75-131	08.27.18 19.51	
1,2-Dichloroethane-D4	84	%	63-144	08.27.18 19.51	
Toluene-D8	92	%	80-117	08.27.18 19.51	

Analytical Method: Total Metals by SW 6010C Prep Method: SW3010A
Tech: MLI % Solids:
Analyst: DEP Date Prep: 08.23.18 09.30
Seq Number: 3061039 SUB: AZ0765

Parameter	Cas Number	Result	RL	MDL	Units	Analysis Date	Flag	Dil
Antimony	7440-36-0	<0.00589	0.0200	0.00589	mg/L	08.23.18 23.01	E8	1
Arsenic	7440-38-2	<0.00550	0.0200	0.00550	mg/L	08.23.18 23.01	E8	1
Barium	7440-39-3	**0.0112**	0.0100	0.00135	mg/L	08.23.18 23.01		1
Cadmium	7440-43-9	<0.00243	0.0100	0.00243	mg/L	08.23.18 23.01	E8	1
Chromium	7440-47-3	<0.000811	0.0100	0.000811	mg/L	08.23.18 23.01	E8	1
Cobalt	7440-48-4	<0.000673	0.0100	0.000673	mg/L	08.23.18 23.01	E8	1
Copper	7440-50-8	<0.00544	0.0200	0.00544	mg/L	08.23.18 23.01	E8	1
Lead	7439-92-1	<0.00237	0.0150	0.00237	mg/L	08.23.18 23.01	E8	1
Nickel	7440-02-0	<0.00307	0.0100	0.00307	mg/L	08.23.18 23.01	E8	1
Selenium	7782-49-2	<0.00439	0.0300	0.00439	mg/L	08.23.18 23.01	E8	1
Silver	7440-22-4	<0.00559	0.0300	0.00559	mg/L	08.23.18 23.01	E8	1
Thallium	7440-28-0	<0.00621	0.0200	0.00621	mg/L	08.23.18 23.01	E8	1
Titanium	7440-32-6	<0.00156	0.180	0.00156	mg/L	08.23.18 23.01	E8	1
Vanadium	7440-62-2	<0.00518	0.0900	0.00518	mg/L	08.23.18 23.01	E8	1
Zinc	7440-66-6	**0.298**	0.0300	0.00391	mg/L	08.23.18 23.01		1

Certificate of Analytical Results 595905

AMEC Foster Wheeler, Phoenix, AZ

Cave Creek Landfill - Maricopa

Sample Id: **MW07-718-081318** Matrix: Water Date Received:08.15.18 17.25

Lab Sample Id: 595905-006 Date Collected: 08.13.18 10.00

Analytical Method: Alkalinity by SM 2320B

Tech: MON % Solids:

Analyst: TNL

Seq Number: 3060957

Parameter	Cas Number	Result	RL	MDL	Units	Analysis Date	Flag	Dil
Alkalinity, Total (CaCO3)	1640192	**162**	20.0	4.00	mg/L	08.22.18 15.00		1
Alkalinity, Bicarbonate (as CaCO3	471-34-1	**142**	20.0	4.00	mg/L	08.22.18 15.00		1
Alkalinity, Carbonate (as CaC	3812-32-6	**20.0**	20.0	4.00	mg/L	08.22.18 15.00		1
Alkalinity, Hydroxide (as CaCO	14280-30-9	<4.00	20.0	4.00	mg/L	08.22.18 15.00	E8	1

Analytical Method: Specific Conductance by SM 2510B

Tech: MON % Solids:

Analyst: TNL

Seq Number: 3060443

Parameter	Cas Number	Result	RL	MDL	Units	Analysis Date	Flag	Dil
Conductivity	COND	**370**	1.00	1.00	uS/cm	08.17.18 14.30		1

Analytical Method: TDS by SM 2540C

Tech: MON % Solids:

Analyst: TNL

Seq Number: 3060722

Parameter	Cas Number	Result	RL	MDL	Units	Analysis Date	Flag	Dil
Total Dissolved Solids	1642222	**214**	10.0	10.0	mg/L	08.17.18 10.00		1

Analytical Method: pH by SM 4500-H

Tech: MON % Solids:

Analyst: TNL

Seq Number: 3060445

Parameter	Cas Number	Result	RL	MDL	Units	Analysis Date	Flag	Dil
pH	12408-02-5	**8.59**	1.00	1.00	SU	08.17.18 11.15	H5	1
Temperature	TEMP	**22.8**	1.0	1.0	Deg C	08.17.18 11.15	H5	1

Certificate of Analytical Results 595905

AMEC Foster Wheeler, Phoenix, AZ

Cave Creek Landfill - Maricopa

Sample Id: **MW07-718-081318** Matrix: Water Date Received:08.15.18 17.25
Lab Sample Id: 595905-006 Date Collected: 08.13.18 10.00

Analytical Method: Inorganic Anions by EPA 300 Prep Method: E300P
Tech: MAB % Solids:
Analyst: MAB Date Prep: 08.24.18 15.40
Seq Number: 3061196 SUB: AZ0765

Parameter	Cas Number	Result	RL	MDL	Units	Analysis Date	Flag	Dil
Chloride	16887-00-6	**20.9**	0.500	0.0280	mg/L	08.24.18 23.24		1
Fluoride	16984-48-8	<0.0360	0.500	0.0360	mg/L	08.24.18 23.24		1
Sulfate	14808-79-8	**1.87**	0.500	0.0460	mg/L	08.24.18 23.24		1

Analytical Method: Nitrite by SM 4500-NO2B
Tech: MON % Solids:
Analyst: TNL
Seq Number: 3060350

Parameter	Cas Number	Result	RL	MDL	Units	Analysis Date	Flag	Dil
Nitrite as N	14797-65-0	<0.0100	0.0200	0.0100	mg/L	08.16.18 14.46	H3E8	1

Analytical Method: Nitrogen, Nitrate-Nitrite by EPA 353.2 Prep Method: E353.2P
Tech: KCS % Solids:
Analyst: KCS Date Prep: 08.21.18 09.30
Seq Number: 3060750 SUB: AZ0765

Parameter	Cas Number	Result	RL	MDL	Units	Analysis Date	Flag	Dil
Nitrate as N	14797-55-8	**0.0850**	0.100	0.0283	mg/L	08.21.18 12.25	E4	1
Nitrogen, Nitrate-Nitrite	7727-37-9	**0.0850**	0.100	0.0283	mg/L	08.21.18 12.25	E4	1

Certificate of Analytical Results 595905

AMEC Foster Wheeler, Phoenix, AZ

Cave Creek Landfill - Maricopa

Sample Id: **MW08-742-081418** Matrix: Water Date Received:08.15.18 17.25
Lab Sample Id: 595905-007 Date Collected: 08.14.18 13.00

Analytical Method: VOCs by SW 8260B Prep Method: SW5030C
Tech: MNI % Solids:
Analyst: MNI Date Prep: 08.27.18 10.50
Seq Number: 3061308 SUB: AZ0765

Dilution Analysis:
Seq#: 3061683 Date Analyzed: 08/30/18 00:40 Date Prep: 08/29/18 19:56

Parameter	Cas Number	Result	RL	MDL	Units	Analysis Date	Flag	Dil
1,1,1,2-Tetrachloroethane	630-20-6	<0.100	0.500	0.100	ug/L	08.27.18 20.43	E8	1
1,1,1-Trichloroethane	71-55-6	<0.200	0.500	0.200	ug/L	08.27.18 20.43	E8	1
1,1,2,2-Tetrachloroethane	79-34-5	<0.100	0.500	0.100	ug/L	08.27.18 20.43	E8	1
1,1,2-Trichloroethane	79-00-5	<0.0900	0.500	0.0900	ug/L	08.27.18 20.43	E8	1
1,1-Dichloroethane	75-34-3	**1.70**	0.500	0.0700	ug/L	08.27.18 20.43		1
1,1-Dichloroethene	75-35-4	<0.200	0.500	0.200	ug/L	08.27.18 20.43	E8	1
1,1-Dichloropropene	563-58-6	<0.200	1.00	0.200	ug/L	08.27.18 20.43	E8	1
1,2,3-Trichlorobenzene	87-61-6	<0.200	5.00	0.200	ug/L	08.27.18 20.43	E8	1
1,2,3-Trichloropropane	96-18-4	<0.200	1.00	0.200	ug/L	08.27.18 20.43	E8	1
1,2,4-Trichlorobenzene	120-82-1	<0.0700	5.00	0.0700	ug/L	08.27.18 20.43	E8	1
1,2,4-Trimethylbenzene	95-63-6	<0.0700	2.00	0.0700	ug/L	08.27.18 20.43	E8	1
1,2-Dibromo-3-Chloropropane	96-12-8	<0.300	2.00	0.300	ug/L	08.27.18 20.43	E8	1
1,2-Dibromoethane	106-93-4	<0.200	0.500	0.200	ug/L	08.27.18 20.43	E8	1
1,2-Dichlorobenzene	95-50-1	<0.0800	1.50	0.0800	ug/L	08.27.18 20.43	E8	1
1,2-Dichloroethane	107-06-2	<0.100	0.500	0.100	ug/L	08.27.18 20.43	E8	1
1,2-Dichloropropane	78-87-5	<0.0900	0.500	0.0900	ug/L	08.27.18 20.43	E8	1
1,3,5-Trimethylbenzene	108-67-8	<0.0700	1.50	0.0700	ug/L	08.27.18 20.43	E8	1
1,3-Dichlorobenzene	541-73-1	<0.0600	1.50	0.0600	ug/L	08.27.18 20.43	E8	1
1,3-Dichloropropane	142-28-9	<0.0700	1.00	0.0700	ug/L	08.27.18 20.43	E8	1
1,4-Dichlorobenzene	106-46-7	<0.200	1.50	0.200	ug/L	08.27.18 20.43	E8	1
2,2-Dichloropropane	594-20-7	<0.200	0.500	0.200	ug/L	08.27.18 20.43	E8	1
2-Butanone	78-93-3	<0.300	5.00	0.300	ug/L	08.27.18 20.43	E8	1
2-Chlorotoluene	95-49-8	<0.0800	1.50	0.0800	ug/L	08.27.18 20.43	E8	1
2-Hexanone	591-78-6	<0.200	5.00	0.200	ug/L	08.27.18 20.43	L1E8	1
4-Chlorotoluene	106-43-4	<0.0700	2.00	0.0700	ug/L	08.27.18 20.43	E8	1
4-Methyl-2-Pentanone	108-10-1	<0.200	5.00	0.200	ug/L	08.27.18 20.43	L1E8	1
Acetone	67-64-1	**80.1**	20.0	0.600	ug/L	08.27.18 20.43		1
Benzene	71-43-2	**0.690**	0.500	0.100	ug/L	08.27.18 20.43		1
Bromobenzene	108-86-1	<0.0900	1.50	0.0900	ug/L	08.27.18 20.43	E8	1
Bromochloromethane	74-97-5	<0.200	0.500	0.200	ug/L	08.27.18 20.43	E8	1
Bromodichloromethane	75-27-4	<0.0800	0.500	0.0800	ug/L	08.27.18 20.43	E8	1
Bromoform	75-25-2	<0.100	1.00	0.100	ug/L	08.27.18 20.43	E8	1
Bromomethane	74-83-9	<0.300	5.00	0.300	ug/L	08.27.18 20.43	E8	1
Carbon Disulfide	75-15-0	<0.0900	0.500	0.0900	ug/L	08.27.18 20.43	E8	1
Carbon Tetrachloride	56-23-5	<0.200	0.500	0.200	ug/L	08.27.18 20.43	E8	1

Certificate of Analytical Results 595905

AMEC Foster Wheeler, Phoenix, AZ

Cave Creek Landfill - Maricopa

Sample Id: **MW08-742-081418** Matrix: Water Date Received:08.15.18 17.25
Lab Sample Id: 595905-007 Date Collected: 08.14.18 13.00

Analytical Method: VOCs by SW 8260B Prep Method: SW5030C
Tech: MNI % Solids:
Analyst: MNI Date Prep: 08.27.18 10.50
Seq Number: 3061308 SUB: AZ0765

Dilution Analysis:
Seq#: 3061683 Date Analyzed: 08/30/18 00:40 Date Prep: 08/29/18 19:56

Parameter	Cas Number	Result	RL	MDL	Units	Analysis Date	Flag	Dil
Chlorobenzene	108-90-7	<0.0700	0.500	0.0700	ug/L	08.27.18 20.43	E8	1
Chloroethane	75-00-3	<0.600	4.00	0.600	ug/L	08.27.18 20.43	E8	1
Chloroform	67-66-3	<0.0700	0.500	0.0700	ug/L	08.27.18 20.43	E8	1
Chloromethane	74-87-3	<0.200	5.00	0.200	ug/L	08.27.18 20.43	E8	1
cis-1,2-Dichloroethene	156-59-2	**2.61**	0.500	0.200	ug/L	08.27.18 20.43		1
cis-1,3-Dichloropropene	10061-01-5	<0.0800	1.00	0.0800	ug/L	08.27.18 20.43	E8	1
Dibromochloromethane	124-48-1	<0.0700	0.500	0.0700	ug/L	08.27.18 20.43	E8	1
Dibromomethane	74-95-3	<0.200	0.500	0.200	ug/L	08.27.18 20.43	E8	1
Dichlorodifluoromethane	75-71-8	<0.200	2.00	0.200	ug/L	08.27.18 20.43	E8	1
Ethylbenzene	100-41-4	<0.0900	2.00	0.0900	ug/L	08.27.18 20.43	E8	1
Hexachlorobutadiene	87-68-3	<0.200	5.00	0.200	ug/L	08.27.18 20.43	E8	1
Iodomethane (Methyl Iodide)	74-88-4	<0.300	2.00	0.300	ug/L	08.27.18 20.43	E8	1
isopropylbenzene	98-82-8	<0.0800	2.50	0.0800	ug/L	08.27.18 20.43	E8	1
m,p-Xylenes	179601-23-1	<0.0900	2.00	0.0900	ug/L	08.27.18 20.43	E8	1
Methylene Chloride	75-09-2	<0.200	3.00	0.200	ug/L	08.27.18 20.43	E8	1
MTBE	1634-04-4	<0.100	2.00	0.100	ug/L	08.27.18 20.43	E8	1
Naphthalene	91-20-3	<0.200	5.00	0.200	ug/L	08.27.18 20.43	E8	1
n-Butylbenzene	104-51-8	<0.200	2.50	0.200	ug/L	08.27.18 20.43	E8	1
n-Propylbenzene	103-65-1	<0.0800	2.00	0.0800	ug/L	08.27.18 20.43	E8	1
o-Xylene	95-47-6	<0.0900	1.00	0.0900	ug/L	08.27.18 20.43	E8	1
p-Cymene (p-Isopropyltoluene)	99-87-6	<0.100	1.50	0.100	ug/L	08.27.18 20.43	E8	1
Sec-Butylbenzene	135-98-8	<0.100	1.50	0.100	ug/L	08.27.18 20.43	E8	1
Styrene	100-42-5	<0.0800	1.00	0.0800	ug/L	08.27.18 20.43	E8	1
tert-Butylbenzene	98-06-6	<0.200	2.50	0.200	ug/L	08.27.18 20.43	E8	1
Tetrachloroethylene	127-18-4	**1.45**	0.500	0.0800	ug/L	08.27.18 20.43		1
Toluene	108-88-3	<0.0700	2.00	0.0700	ug/L	08.27.18 20.43	E8	1
Total Trihalomethane		<0.0700	0.500	0.0700	ug/L	08.27.18 20.43	E8	1
Total Xylenes	1330-20-7	<0.0900	1.00	0.0900	ug/L	08.27.18 20.43	E8	1
trans-1,2-dichloroethene	156-60-5	<0.0900	0.500	0.0900	ug/L	08.27.18 20.43	E8	1
Trichloroethene	79-01-6	**134**	2.50	1.00	ug/L	08.30.18 00.40	D2	5
Trichlorofluoromethane	75-69-4	<0.400	2.00	0.400	ug/L	08.27.18 20.43	E8	1
Vinyl Acetate	108-05-4	<0.200	5.00	0.200	ug/L	08.27.18 20.43	E8	1
Vinyl Chloride	75-01-4	<0.100	0.500	0.100	ug/L	08.27.18 20.43	E8	1
trans-1,3-dichloropropene	10061-02-6	<0.0600	0.500	0.0600	ug/L	08.27.18 20.43	E8	1
1,1,2-Trichloro-1,2,2-Trifluoroethane	76-13-1	<0.300	5.00	0.300	ug/L	08.27.18 20.43	E8	1

Certificate of Analytical Results 595905

AMEC Foster Wheeler, Phoenix, AZ

Cave Creek Landfill - Maricopa

Sample Id: **MW08-742-081418** Matrix: Water Date Received:08.15.18 17.25
Lab Sample Id: 595905-007 Date Collected: 08.14.18 13.00

Analytical Method: VOCs by SW 8260B Prep Method: SW5030C
Tech: MNI % Solids:
Analyst: MNI Date Prep: 08.27.18 10.50
Seq Number: 3061308 SUB: AZ0765

Dilution Analysis:
Seq#: 3061683 Date Analyzed: 08/30/18 00:40 Date Prep: 08/29/18 19:56

Parameter	Cas Number	Result	RL	MDL	Units	Analysis Date	Flag	Dil
1,3-Butadiene	106-99-0	<0.276	5.00	0.276	ug/L	08.27.18 20.43	E8	1
Cyclohexane	110-82-7	<0.115	5.00	0.115	ug/L	08.27.18 20.43	E8	1
Dicyclopentadiene	77-73-6	<0.0540	5.00	0.0540	ug/L	08.27.18 20.43	E8	1
Methylcyclohexane	108-87-2	<0.117	5.00	0.117	ug/L	08.27.18 20.43	E8	1
n-Hexane	110-54-3	<0.0920	5.00	0.0920	ug/L	08.27.18 20.43	E8	1
4-Ethyltoluene	622-96-8	Not Present			ug/L	08.27.18 20.43	T4E8	1
Propene	115-07-1	Not Present			ug/L	08.27.18 20.43	T4E8	1

Surrogate	% Recovery	Units	Limits	Analysis Date	Flag
4-Bromofluorobenzene	87	%	74-124	08.27.18 20.43	
Dibromofluoromethane	99	%	75-131	08.27.18 20.43	
1,2-Dichloroethane-D4	86	%	63-144	08.27.18 20.43	
Toluene-D8	97	%	80-117	08.27.18 20.43	

Certificate of Analytical Results 595905

AMEC Foster Wheeler, Phoenix, AZ

Cave Creek Landfill - Maricopa

Sample Id: **MW08-742-081418** Matrix: Water Date Received:08.15.18 17.25
Lab Sample Id: 595905-007 Date Collected: 08.14.18 13.00

Analytical Method: Total Metals by SW 6010C Prep Method: SW3010A
Tech: MLI % Solids:
Analyst: DEP Date Prep: 08.23.18 09.30
Seq Number: 3061039 SUB: AZ0765

Parameter	Cas Number	Result	RL	MDL	Units	Analysis Date	Flag	Dil
Antimony	7440-36-0	<0.00589	0.0200	0.00589	mg/L	08.23.18 23.06	E8	1
Arsenic	7440-38-2	<0.00550	0.0200	0.00550	mg/L	08.23.18 23.06	E8	1
Barium	7440-39-3	**0.0125**	0.0100	0.00135	mg/L	08.23.18 23.06		1
Cadmium	7440-43-9	<0.00243	0.0100	0.00243	mg/L	08.23.18 23.06	E8	1
Chromium	7440-47-3	<0.000811	0.0100	0.000811	mg/L	08.23.18 23.06	E8	1
Cobalt	7440-48-4	<0.000673	0.0100	0.000673	mg/L	08.23.18 23.06	E8	1
Copper	7440-50-8	<0.00544	0.0200	0.00544	mg/L	08.23.18 23.06	E8	1
Lead	7439-92-1	<0.00237	0.0150	0.00237	mg/L	08.23.18 23.06	E8	1
Nickel	7440-02-0	<0.00307	0.0100	0.00307	mg/L	08.23.18 23.06	E8	1
Selenium	7782-49-2	<0.00439	0.0300	0.00439	mg/L	08.23.18 23.06	E8	1
Silver	7440-22-4	<0.00559	0.0300	0.00559	mg/L	08.23.18 23.06	E8	1
Thallium	7440-28-0	<0.00621	0.0200	0.00621	mg/L	08.23.18 23.06	E8	1
Titanium	7440-32-6	<0.00156	0.180	0.00156	mg/L	08.23.18 23.06	E8	1
Vanadium	7440-62-2	<0.00518	0.0900	0.00518	mg/L	08.23.18 23.06	E8	1
Zinc	7440-66-6	**0.283**	0.0300	0.00391	mg/L	08.23.18 23.06		1

Analytical Method: Alkalinity by SM 2320B
Tech: MON % Solids:
Analyst: TNL
Seq Number: 3060957

Parameter	Cas Number	Result	RL	MDL	Units	Analysis Date	Flag	Dil
Alkalinity, Total (CaCO3)	1640192	**132**	20.0	4.00	mg/L	08.22.18 15.00		1
Alkalinity, Bicarbonate (as CaCO3	471-34-1	**132**	20.0	4.00	mg/L	08.22.18 15.00		1
Alkalinity, Carbonate (as CaCO3	3812-32-6	<4.00	20.0	4.00	mg/L	08.22.18 15.00	E8	1
Alkalinity, Hydroxide (as CaCO3	14280-30-9	<4.00	20.0	4.00	mg/L	08.22.18 15.00	E8	1

Certificate of Analytical Results 595905

AMEC Foster Wheeler, Phoenix, AZ

Cave Creek Landfill - Maricopa

Sample Id: **MW08-742-081418** Matrix: Water Date Received:08.15.18 17.25
Lab Sample Id: 595905-007 Date Collected: 08.14.18 13.00

Analytical Method: Specific Conductance by SM 2510B
Tech: MON % Solids:
Analyst: TNL
Seq Number: 3060443

Parameter	Cas Number	Result	RL	MDL	Units	Analysis Date	Flag	Dil
Conductivity	COND	**305**	1.00	1.00	uS/cm	08.17.18 14.30		1

Analytical Method: TDS by SM 2540C
Tech: MON % Solids:
Analyst: TNL
Seq Number: 3060722

Parameter	Cas Number	Result	RL	MDL	Units	Analysis Date	Flag	Dil
Total Dissolved Solids	1642222	**157**	10.0	10.0	mg/L	08.17.18 10.00		1

Analytical Method: pH by SM 4500-H
Tech: MON % Solids:
Analyst: TNL
Seq Number: 3060445

Parameter	Cas Number	Result	RL	MDL	Units	Analysis Date	Flag	Dil
pH	12408-02-5	**8.82**	1.00	1.00	SU	08.17.18 11.15	H5	1
Temperature	TEMP	**23.8**	1.0	1.0	Deg C	08.17.18 11.15	H5	1

Analytical Method: Inorganic Anions by EPA 300 Prep Method: E300P
Tech: MAB % Solids:
Analyst: MAB Date Prep: 08.24.18 15.40
Seq Number: 3061196 SUB: AZ0765

Parameter	Cas Number	Result	RL	MDL	Units	Analysis Date	Flag	Dil
Chloride	16887-00-6	**20.9**	0.500	0.0280	mg/L	08.24.18 23.36		1
Fluoride	16984-48-8	**0.0393**	0.500	0.0360	mg/L	08.24.18 23.36	E4	1
Sulfate	14808-79-8	**0.594**	0.500	0.0460	mg/L	08.24.18 23.36		1

Certificate of Analytical Results 595905

AMEC Foster Wheeler, Phoenix, AZ

Cave Creek Landfill - Maricopa

Sample Id: **MW08-742-081418** Matrix: Water Date Received:08.15.18 17.25

Lab Sample Id: 595905-007 Date Collected: 08.14.18 13.00

Analytical Method: Nitrite by SM 4500-NO2B

Tech: MON % Solids:

Analyst: TNL

Seq Number: 3060350

Parameter	Cas Number	Result	RL	MDL	Units	Analysis Date	Flag	Dil
Nitrite as N	14797-65-0	<0.0100	0.0200	0.0100	mg/L	08.16.18 14.46	H3E8	1

Analytical Method: Nitrogen, Nitrate-Nitrite by EPA 353.2 Prep Method: E353.2P

Tech: KCS % Solids:

Analyst: KCS Date Prep: 08.21.18 09.30

Seq Number: 3060750 SUB: AZ0765

Parameter	Cas Number	Result	RL	MDL	Units	Analysis Date	Flag	Dil
Nitrate as N	14797-55-8	**0.202**	0.100	0.0283	mg/L	08.21.18 12.26		1
Nitrogen, Nitrate-Nitrite	7727-37-9	**0.202**	0.100	0.0283	mg/L	08.21.18 12.26		1

Certificate of Analytical Results 595905

AMEC Foster Wheeler, Phoenix, AZ

Cave Creek Landfill - Maricopa

Sample Id: **PW-734-081518** Matrix: Water Date Received:08.15.18 17.25
Lab Sample Id: 595905-008 Date Collected: 08.15.18 14.30

Analytical Method: VOCs by SW 8260B Prep Method: SW5030C
Tech: SAD % Solids:
Analyst: SAD Date Prep: 08.29.18 10.46
Seq Number: 3061633 SUB: AZ0765

Parameter	Cas Number	Result	RL	MDL	Units	Analysis Date	Flag	Dil
1,1,1,2-Tetrachloroethane	630-20-6	<0.195	5.00	0.195	ug/L	08.29.18 15.05	E8	1
1,1,1-Trichloroethane	71-55-6	<0.130	5.00	0.130	ug/L	08.29.18 15.05	E8	1
1,1,2,2-Tetrachloroethane	79-34-5	<0.365	5.00	0.365	ug/L	08.29.18 15.05	E8	1
1,1,2-Trichloroethane	79-00-5	<0.272	5.00	0.272	ug/L	08.29.18 15.05	E8	1
1,1-Dichloroethane	75-34-3	<0.182	5.00	0.182	ug/L	08.29.18 15.05	E8	1
1,1-Dichloroethene	75-35-4	<0.178	5.00	0.178	ug/L	08.29.18 15.05	E8	1
1,1-Dichloropropene	563-58-6	<0.257	5.00	0.257	ug/L	08.29.18 15.05	E8	1
1,2,3-Trichlorobenzene	87-61-6	<2.00	5.00	2.00	ug/L	08.29.18 15.05	E8	1
1,2,3-Trichloropropane	96-18-4	<0.214	5.00	0.214	ug/L	08.29.18 15.05	E8	1
1,2,4-Trichlorobenzene	120-82-1	<2.00	5.00	2.00	ug/L	08.29.18 15.05	E8	1
1,2,4-Trimethylbenzene	95-63-6	<0.113	5.00	0.113	ug/L	08.29.18 15.05	E8	1
1,2-Dibromo-3-Chloropropane	96-12-8	<0.707	5.00	0.707	ug/L	08.29.18 15.05	E8	1
1,2-Dibromoethane	106-93-4	<0.380	5.00	0.380	ug/L	08.29.18 15.05	E8	1
1,2-Dichlorobenzene	95-50-1	<0.175	5.00	0.175	ug/L	08.29.18 15.05	E8	1
1,2-Dichloroethane	107-06-2	<0.283	5.00	0.283	ug/L	08.29.18 15.05	E8	1
1,2-Dichloropropane	78-87-5	<0.170	5.00	0.170	ug/L	08.29.18 15.05	E8	1
1,3,5-Trimethylbenzene	108-67-8	<0.178	5.00	0.178	ug/L	08.29.18 15.05	E8	1
1,3-Dichlorobenzene	541-73-1	<0.169	5.00	0.169	ug/L	08.29.18 15.05	E8	1
1,3-Dichloropropane	142-28-9	<0.199	5.00	0.199	ug/L	08.29.18 15.05	E8	1
1,4-Dichlorobenzene	106-46-7	<0.222	5.00	0.222	ug/L	08.29.18 15.05	E8	1
2,2-Dichloropropane	594-20-7	<0.154	5.00	0.154	ug/L	08.29.18 15.05	E8	1
2-Butanone	78-93-3	<1.32	50.0	1.32	ug/L	08.29.18 15.05	E8	1
2-Chlorotoluene	95-49-8	<0.293	5.00	0.293	ug/L	08.29.18 15.05	E8	1
2-Hexanone	591-78-6	<1.05	50.0	1.05	ug/L	08.29.18 15.05	E8	1
4-Chlorotoluene	106-43-4	<0.114	5.00	0.114	ug/L	08.29.18 15.05	E8	1
4-Methyl-2-Pentanone	108-10-1	<0.874	50.0	0.874	ug/L	08.29.18 15.05	E8	1
Acetone	67-64-1	<20.0	100	20.0	ug/L	08.29.18 15.05	E8	1
Benzene	71-43-2	<0.185	5.00	0.185	ug/L	08.29.18 15.05	E8	1
Bromobenzene	108-86-1	<0.258	5.00	0.258	ug/L	08.29.18 15.05	E8	1
Bromochloromethane	74-97-5	<0.328	5.00	0.328	ug/L	08.29.18 15.05	E8	1
Bromodichloromethane	75-27-4	<0.164	5.00	0.164	ug/L	08.29.18 15.05	E8	1
Bromoform	75-25-2	<0.348	5.00	0.348	ug/L	08.29.18 15.05	E8	1
Bromomethane	74-83-9	<0.127	5.00	0.127	ug/L	08.29.18 15.05	E8	1
Carbon Disulfide	75-15-0	<0.173	5.00	0.173	ug/L	08.29.18 15.05	E8	1
Carbon Tetrachloride	56-23-5	<0.243	5.00	0.243	ug/L	08.29.18 15.05	E8	1
Chlorobenzene	108-90-7	<0.110	5.00	0.110	ug/L	08.29.18 15.05	E8	1
Chloroethane	75-00-3	<0.190	10.0	0.190	ug/L	08.29.18 15.05	E8	1
Chloroform	67-66-3	<0.107	5.00	0.107	ug/L	08.29.18 15.05	E8	1

Certificate of Analytical Results 595905

AMEC Foster Wheeler, Phoenix, AZ

Cave Creek Landfill - Maricopa

Sample Id: **PW-734-081518** Matrix: Water Date Received:08.15.18 17.25
Lab Sample Id: 595905-008 Date Collected: 08.15.18 14.30

Analytical Method: VOCs by SW 8260B Prep Method: SW5030C
Tech: SAD % Solids:
Analyst: SAD Date Prep: 08.29.18 10.46
Seq Number: 3061633 SUB: AZ0765

Parameter	Cas Number	Result	RL	MDL	Units	Analysis Date	Flag	Dil
Chloromethane	74-87-3	<5.00	10.0	5.00	ug/L	08.29.18 15.05	E8	1
cis-1,2-Dichloroethene	156-59-2	**0.790**	5.00	0.162	ug/L	08.29.18 15.05	E4	1
cis-1,3-Dichloropropene	10061-01-5	<0.126	5.00	0.126	ug/L	08.29.18 15.05	E8	1
Dibromochloromethane	124-48-1	<0.212	5.00	0.212	ug/L	08.29.18 15.05	E8	1
Dibromomethane	74-95-3	<0.186	5.00	0.186	ug/L	08.29.18 15.05	E8	1
Dichlorodifluoromethane	75-71-8	<0.148	5.00	0.148	ug/L	08.29.18 15.05	E8	1
Ethylbenzene	100-41-4	<0.190	5.00	0.190	ug/L	08.29.18 15.05	E8	1
Hexachlorobutadiene	87-68-3	<2.00	5.00	2.00	ug/L	08.29.18 15.05	E8	1
Iodomethane (Methyl Iodide)	74-88-4	<0.170	20.0	0.170	ug/L	08.29.18 15.05	E8	1
isopropylbenzene	98-82-8	<0.218	5.00	0.218	ug/L	08.29.18 15.05	E8	1
m,p-Xylenes	179601-23-1	<1.00	10.0	1.00	ug/L	08.29.18 15.05	E8	1
Methylene Chloride	75-09-2	<2.00	5.00	2.00	ug/L	08.29.18 15.05	E8	1
MTBE	1634-04-4	<0.500	5.00	0.500	ug/L	08.29.18 15.05	E8	1
Naphthalene	91-20-3	<2.00	10.0	2.00	ug/L	08.29.18 15.05	E8	1
n-Butylbenzene	104-51-8	<2.00	5.00	2.00	ug/L	08.29.18 15.05	E8	1
n-Propylbenzene	103-65-1	<0.173	5.00	0.173	ug/L	08.29.18 15.05	E8	1
o-Xylene	95-47-6	<0.500	5.00	0.500	ug/L	08.29.18 15.05	E8	1
p-Cymene (p-Isopropyltoluene)	99-87-6	<0.150	5.00	0.150	ug/L	08.29.18 15.05	E8	1
Sec-Butylbenzene	135-98-8	<0.124	5.00	0.124	ug/L	08.29.18 15.05	E8	1
Styrene	100-42-5	<0.197	5.00	0.197	ug/L	08.29.18 15.05	E8	1
tert-Butylbenzene	98-06-6	<0.177	5.00	0.177	ug/L	08.29.18 15.05	E8	1
Tetrachloroethylene	127-18-4	<0.347	5.00	0.347	ug/L	08.29.18 15.05	E8	1
Toluene	108-88-3	<0.500	5.00	0.500	ug/L	08.29.18 15.05	E8	1
Total Trihalomethane		<0.107	5.00	0.107	ug/L	08.29.18 15.05	E8	1
Total Xylenes	1330-20-7	<0.500	5.00	0.500	ug/L	08.29.18 15.05	E8	1
trans-1,2-dichloroethene	156-60-5	<0.167	5.00	0.167	ug/L	08.29.18 15.05	E8	1
Trichloroethene	79-01-6	**10.3**	5.00	0.218	ug/L	08.29.18 15.05		1
Trichlorofluoromethane	75-69-4	<0.191	5.00	0.191	ug/L	08.29.18 15.05	E8	1
Vinyl Acetate	108-05-4	<0.583	50.0	0.583	ug/L	08.29.18 15.05	E8	1
Vinyl Chloride	75-01-4	<0.232	2.00	0.232	ug/L	08.29.18 15.05	E8	1
trans-1,3-dichloropropene	10061-02-6	<0.198	5.00	0.198	ug/L	08.29.18 15.05	E8	1
1,1,2-Trichloro-1,2,2-Trifluoroethane	76-13-1	<0.175	10.0	0.175	ug/L	08.29.18 15.05	E8	1
1,3-Butadiene	106-99-0	<2.52	5.00	2.52	ug/L	08.29.18 15.05	E8	1
Cyclohexane *	110-82-7	<0.309	5.00	0.309	ug/L	08.29.18 15.05	E8	1
Dicyclopentadiene	77-73-6	<5.00	10.0	5.00	ug/L	08.29.18 15.05	E8	1
Methylcyclohexane	108-87-2	<0.228	10.0	0.228	ug/L	08.29.18 15.05	E8	1
n-Hexane	110-54-3	<5.00	5.00	5.00	ug/L	08.29.18 15.05	E8	1
4-Ethyltoluene	622-96-8	Not Present			ug/L	08.29.18 15.05	T4E8	1

Certificate of Analytical Results 595905

AMEC Foster Wheeler, Phoenix, AZ

Cave Creek Landfill - Maricopa

Sample Id: **PW-734-081518** Matrix: Water Date Received:08.15.18 17.25
Lab Sample Id: 595905-008 Date Collected: 08.15.18 14.30

Analytical Method: VOCs by SW 8260B Prep Method: SW5030C
Tech: SAD % Solids:
Analyst: SAD Date Prep: 08.29.18 10.46
Seq Number: 3061633 SUB: AZ0765

Parameter	Cas Number	Result	RL	MDL	Units	Analysis Date	Flag	Dil
Propene	115-07-1	Not Present			ug/L	08.29.18 15.05	T4E8	1

Surrogate	% Recovery	Units	Limits	Analysis Date	Flag
Dibromofluoromethane	98	%	75-131	08.29.18 15.05	
1,2-Dichloroethane-D4	99	%	63-144	08.29.18 15.05	
Toluene-D8	106	%	80-117	08.29.18 15.05	
4-Bromofluorobenzene	100	%	74-124	08.29.18 15.05	

Analytical Method: Total Metals by SW 6010C Prep Method: SW3010A
Tech: MLI % Solids:
Analyst: DEP Date Prep: 08.23.18 09.30
Seq Number: 3061039 SUB: AZ0765

Parameter	Cas Number	Result	RL	MDL	Units	Analysis Date	Flag	Dil
Antimony	7440-36-0	<0.00589	0.0200	0.00589	mg/L	08.23.18 23.10	E8	1
Arsenic	7440-38-2	**0.0144**	0.0200	0.00550	mg/L	08.23.18 23.10	E4	1
Barium	7440-39-3	**0.00409**	0.0100	0.00135	mg/L	08.23.18 23.10	E4	1
Cadmium	7440-43-9	<0.00243	0.0100	0.00243	mg/L	08.23.18 23.10	E8	1
Chromium	7440-47-3	<0.000811	0.0100	0.000811	mg/L	08.23.18 23.10	E8	1
Cobalt	7440-48-4	<0.000673	0.0100	0.000673	mg/L	08.23.18 23.10	E8	1
Copper	7440-50-8	<0.00544	0.0200	0.00544	mg/L	08.23.18 23.10	E8	1
Lead	7439-92-1	<0.00237	0.0150	0.00237	mg/L	08.23.18 23.10	E8	1
Nickel	7440-02-0	<0.00307	0.0100	0.00307	mg/L	08.23.18 23.10	E8	1
Selenium	7782-49-2	<0.00439	0.0300	0.00439	mg/L	08.23.18 23.10	E8	1
Silver	7440-22-4	<0.00559	0.0300	0.00559	mg/L	08.23.18 23.10	E8	1
Thallium	7440-28-0	<0.00621	0.0200	0.00621	mg/L	08.23.18 23.10	E8	1
Titanium	7440-32-6	<0.00156	0.180	0.00156	mg/L	08.23.18 23.10	E8	1
Vanadium	7440-62-2	**0.0157**	0.0900	0.00518	mg/L	08.23.18 23.10	E4	1
Zinc	7440-66-6	**0.0518**	0.0300	0.00391	mg/L	08.23.18 23.10		1

Certificate of Analytical Results 595905

AMEC Foster Wheeler, Phoenix, AZ

Cave Creek Landfill - Maricopa

Sample Id: **PW-734-081518** Matrix: Water Date Received:08.15.18 17.25

Lab Sample Id: 595905-008 Date Collected: 08.15.18 14.30

Analytical Method: Alkalinity by SM 2320B

Tech: MON % Solids:

Analyst: TNL

Seq Number: 3060957

Parameter	Cas Number	Result	RL	MDL	Units	Analysis Date	Flag	Dil
Alkalinity, Total (CaCO3)	1640192	**228**	20.0	4.00	mg/L	08.22.18 15.00		1
Alkalinity, Bicarbonate (as CaCO3	471-34-1	**196**	20.0	4.00	mg/L	08.22.18 15.00		1
Alkalinity, Carbonate (as CaC	3812-32-6	**32.0**	20.0	4.00	mg/L	08.22.18 15.00		1
Alkalinity, Hydroxide (as CaCO	14280-30-9	<4.00	20.0	4.00	mg/L	08.22.18 15.00	E8	1

Analytical Method: Specific Conductance by SM 2510B

Tech: MON % Solids:

Analyst: TNL

Seq Number: 3060443

Parameter	Cas Number	Result	RL	MDL	Units	Analysis Date	Flag	Dil
Conductivity	COND	**525**	1.00	1.00	uS/cm	08.17.18 14.30		1

Analytical Method: TDS by SM 2540C

Tech: MON % Solids:

Analyst: TNL

Seq Number: 3060722

Parameter	Cas Number	Result	RL	MDL	Units	Analysis Date	Flag	Dil
Total Dissolved Solids	1642222	**352**	10.0	10.0	mg/L	08.17.18 10.00		1

Analytical Method: pH by SM 4500-H

Tech: MON % Solids:

Analyst: TNL

Seq Number: 3060445

Parameter	Cas Number	Result	RL	MDL	Units	Analysis Date	Flag	Dil
pH	12408-02-5	**8.06**	1.00	1.00	SU	08.17.18 11.15	H5	1
Temperature	TEMP	**23.3**	1.0	1.0	Deg C	08.17.18 11.15	H5	1

Certificate of Analytical Results 595905

AMEC Foster Wheeler, Phoenix, AZ

Cave Creek Landfill - Maricopa

Sample Id: **PW-734-081518** Matrix: Water Date Received:08.15.18 17.25
Lab Sample Id: 595905-008 Date Collected: 08.15.18 14.30

Analytical Method: Inorganic Anions by EPA 300 Prep Method: E300P
Tech: MAB % Solids:
Analyst: MAB Date Prep: 08.24.18 15.40
Seq Number: 3061196 SUB: AZ0765

Parameter	Cas Number	Result	RL	MDL	Units	Analysis Date	Flag	Dil
Chloride	16887-00-6	**21.4**	0.500	0.0280	mg/L	08.24.18 23.47		1
Fluoride	16984-48-8	<0.0360	0.500	0.0360	mg/L	08.24.18 23.47		1
Sulfate	14808-79-8	**18.3**	0.500	0.0460	mg/L	08.24.18 23.47		1

Analytical Method: Nitrite by SM 4500-NO2B
Tech: MON % Solids:
Analyst: TNL
Seq Number: 3060350

Parameter	Cas Number	Result	RL	MDL	Units	Analysis Date	Flag	Dil
Nitrite as N	14797-65-0	<0.0100	0.0200	0.0100	mg/L	08.16.18 14.46	E8	1

Analytical Method: Nitrogen, Nitrate-Nitrite by EPA 353.2 Prep Method: E353.2P
Tech: KCS % Solids:
Analyst: KCS Date Prep: 08.21.18 09.30
Seq Number: 3060750 SUB: AZ0765

Parameter	Cas Number	Result	RL	MDL	Units	Analysis Date	Flag	Dil
Nitrate as N	14797-55-8	**1.25**	0.100	0.0283	mg/L	08.21.18 12.31		1
Nitrogen, Nitrate-Nitrite	7727-37-9	**1.25**	0.100	0.0283	mg/L	08.21.18 12.31		1

Certificate of Analytical Results 595905

AMEC Foster Wheeler, Phoenix, AZ

Cave Creek Landfill - Maricopa

Sample Id: **DUP01-081418** Matrix: Water Date Received:08.15.18 17.25
Lab Sample Id: 595905-009 Date Collected: 08.14.18 14.30

Analytical Method: VOCs by SW 8260B Prep Method: SW5030C
Tech: MNI % Solids:
Analyst: MNI Date Prep: 08.27.18 10.50
Seq Number: 3061308 SUB: AZ0765

Dilution Analysis:
Seq#: 3061683 Date Analyzed: 08/30/18 01:06 Date Prep: 08/29/18 19:56

Parameter	Cas Number	Result	RL	MDL	Units	Analysis Date	Flag	Dil
1,1,1,2-Tetrachloroethane	630-20-6	<0.100	0.500	0.100	ug/L	08.27.18 21.09	E8	1
1,1,1-Trichloroethane	71-55-6	<0.200	0.500	0.200	ug/L	08.27.18 21.09	E8	1
1,1,2,2-Tetrachloroethane	79-34-5	<0.100	0.500	0.100	ug/L	08.27.18 21.09	E8	1
1,1,2-Trichloroethane	79-00-5	<0.0900	0.500	0.0900	ug/L	08.27.18 21.09	E8	1
1,1-Dichloroethane	75-34-3	**1.60**	0.500	0.0700	ug/L	08.27.18 21.09		1
1,1-Dichloroethene	75-35-4	<0.200	0.500	0.200	ug/L	08.27.18 21.09	E8	1
1,1-Dichloropropene	563-58-6	<0.200	1.00	0.200	ug/L	08.27.18 21.09	E8	1
1,2,3-Trichlorobenzene	87-61-6	<0.200	5.00	0.200	ug/L	08.27.18 21.09	E8	1
1,2,3-Trichloropropane	96-18-4	<0.200	1.00	0.200	ug/L	08.27.18 21.09	E8	1
1,2,4-Trichlorobenzene	120-82-1	<0.0700	5.00	0.0700	ug/L	08.27.18 21.09	E8	1
1,2,4-Trimethylbenzene	95-63-6	<0.0700	2.00	0.0700	ug/L	08.27.18 21.09	E8	1
1,2-Dibromo-3-Chloropropane	96-12-8	<0.300	2.00	0.300	ug/L	08.27.18 21.09	E8	1
1,2-Dibromoethane	106-93-4	<0.200	0.500	0.200	ug/L	08.27.18 21.09	E8	1
1,2-Dichlorobenzene	95-50-1	<0.0800	1.50	0.0800	ug/L	08.27.18 21.09	E8	1
1,2-Dichloroethane	107-06-2	<0.100	0.500	0.100	ug/L	08.27.18 21.09	E8	1
1,2-Dichloropropane	78-87-5	<0.0900	0.500	0.0900	ug/L	08.27.18 21.09	E8	1
1,3,5-Trimethylbenzene	108-67-8	<0.0700	1.50	0.0700	ug/L	08.27.18 21.09	E8	1
1,3-Dichlorobenzene	541-73-1	<0.0600	1.50	0.0600	ug/L	08.27.18 21.09	E8	1
1,3-Dichloropropane	142-28-9	<0.0700	1.00	0.0700	ug/L	08.27.18 21.09	E8	1
1,4-Dichlorobenzene	106-46-7	<0.200	1.50	0.200	ug/L	08.27.18 21.09	E8	1
2,2-Dichloropropane	594-20-7	<0.200	0.500	0.200	ug/L	08.27.18 21.09	E8	1
2-Butanone	78-93-3	<0.300	5.00	0.300	ug/L	08.27.18 21.09	E8	1
2-Chlorotoluene	95-49-8	<0.0800	1.50	0.0800	ug/L	08.27.18 21.09	E8	1
2-Hexanone	591-78-6	<0.200	5.00	0.200	ug/L	08.27.18 21.09	L1E8	1
4-Chlorotoluene	106-43-4	<0.0700	2.00	0.0700	ug/L	08.27.18 21.09	E8	1
4-Methyl-2-Pentanone	108-10-1	<0.200	5.00	0.200	ug/L	08.27.18 21.09	L1E8	1
Acetone	67-64-1	**77.3**	20.0	0.600	ug/L	08.27.18 21.09		1
Benzene	71-43-2	**0.670**	0.500	0.100	ug/L	08.27.18 21.09		1
Bromobenzene	108-86-1	<0.0900	1.50	0.0900	ug/L	08.27.18 21.09	E8	1
Bromochloromethane	74-97-5	<0.200	0.500	0.200	ug/L	08.27.18 21.09	E8	1
Bromodichloromethane	75-27-4	<0.0800	0.500	0.0800	ug/L	08.27.18 21.09	E8	1
Bromoform	75-25-2	<0.100	1.00	0.100	ug/L	08.27.18 21.09	E8	1
Bromomethane	74-83-9	<0.300	5.00	0.300	ug/L	08.27.18 21.09	E8	1
Carbon Disulfide	75-15-0	<0.0900	0.500	0.0900	ug/L	08.27.18 21.09	E8	1
Carbon Tetrachloride	56-23-5	<0.200	0.500	0.200	ug/L	08.27.18 21.09	E8	1

Certificate of Analytical Results 595905

AMEC Foster Wheeler, Phoenix, AZ

Cave Creek Landfill - Maricopa

Sample Id: **DUP01-081418** Matrix: Water Date Received:08.15.18 17.25
Lab Sample Id: 595905-009 Date Collected: 08.14.18 14.30

Analytical Method: VOCs by SW 8260B Prep Method: SW5030C
Tech: MNI % Solids:
Analyst: MNI Date Prep: 08.27.18 10.50
Seq Number: 3061308 SUB: AZ0765

Dilution Analysis:
Seq#: 3061683 Date Analyzed: 08/30/18 01:06 Date Prep: 08/29/18 19:56

Parameter	Cas Number	Result	RL	MDL	Units	Analysis Date	Flag	Dil
Chlorobenzene	108-90-7	<0.0700	0.500	0.0700	ug/L	08.27.18 21.09	E8	1
Chloroethane	75-00-3	<0.600	4.00	0.600	ug/L	08.27.18 21.09	E8	1
Chloroform	67-66-3	**1.58**	0.500	0.0700	ug/L	08.27.18 21.09	B1	1
Chloromethane	74-87-3	<0.200	5.00	0.200	ug/L	08.27.18 21.09	E8	1
cis-1,2-Dichloroethene	156-59-2	**2.57**	0.500	0.200	ug/L	08.27.18 21.09		1
cis-1,3-Dichloropropene	10061-01-5	<0.0800	1.00	0.0800	ug/L	08.27.18 21.09	E8	1
Dibromochloromethane	124-48-1	<0.0700	0.500	0.0700	ug/L	08.27.18 21.09	E8	1
Dibromomethane	74-95-3	<0.200	0.500	0.200	ug/L	08.27.18 21.09	E8	1
Dichlorodifluoromethane	75-71-8	<0.200	2.00	0.200	ug/L	08.27.18 21.09	E8	1
Ethylbenzene	100-41-4	<0.0900	2.00	0.0900	ug/L	08.27.18 21.09	E8	1
Hexachlorobutadiene	87-68-3	<0.200	5.00	0.200	ug/L	08.27.18 21.09	E8	1
Iodomethane (Methyl Iodide)	74-88-4	<0.300	2.00	0.300	ug/L	08.27.18 21.09	E8	1
isopropylbenzene	98-82-8	<0.0800	2.50	0.0800	ug/L	08.27.18 21.09	E8	1
m,p-Xylenes	179601-23-1	<0.0900	2.00	0.0900	ug/L	08.27.18 21.09	E8	1
Methylene Chloride	75-09-2	<0.200	3.00	0.200	ug/L	08.27.18 21.09	E8	1
MTBE	1634-04-4	<0.100	2.00	0.100	ug/L	08.27.18 21.09	E8	1
Naphthalene	91-20-3	<0.200	5.00	0.200	ug/L	08.27.18 21.09	E8	1
n-Butylbenzene	104-51-8	<0.200	2.50	0.200	ug/L	08.27.18 21.09	E8	1
n-Propylbenzene	103-65-1	<0.0800	2.00	0.0800	ug/L	08.27.18 21.09	E8	1
o-Xylene	95-47-6	<0.0900	1.00	0.0900	ug/L	08.27.18 21.09	E8	1
p-Cymene (p-Isopropyltoluene)	99-87-6	<0.100	1.50	0.100	ug/L	08.27.18 21.09	E8	1
Sec-Butylbenzene	135-98-8	<0.100	1.50	0.100	ug/L	08.27.18 21.09	E8	1
Styrene	100-42-5	<0.0800	1.00	0.0800	ug/L	08.27.18 21.09	E8	1
tert-Butylbenzene	98-06-6	<0.200	2.50	0.200	ug/L	08.27.18 21.09	E8	1
Tetrachloroethylene	127-18-4	**1.74**	0.500	0.0800	ug/L	08.27.18 21.09		1
Toluene	108-88-3	<0.0700	2.00	0.0700	ug/L	08.27.18 21.09	E8	1
Total Trihalomethane		**1.58**	0.500	0.0700	ug/L	08.27.18 21.09		1
Total Xylenes	1330-20-7	<0.0900	1.00	0.0900	ug/L	08.27.18 21.09	E8	1
trans-1,2-dichloroethene	156-60-5	<0.0900	0.500	0.0900	ug/L	08.27.18 21.09	E8	1
Trichloroethene	79-01-6	**133**	2.50	1.00	ug/L	08.30.18 01.06	D2	5
Trichlorofluoromethane	75-69-4	<0.400	2.00	0.400	ug/L	08.27.18 21.09	E8	1
Vinyl Acetate	108-05-4	<0.200	5.00	0.200	ug/L	08.27.18 21.09	E8	1
Vinyl Chloride	75-01-4	<0.100	0.500	0.100	ug/L	08.27.18 21.09	E8	1
trans-1,3-dichloropropene	10061-02-6	<0.0600	0.500	0.0600	ug/L	08.27.18 21.09	E8	1
1,1,2-Trichloro-1,2,2-Trifluoroethane	76-13-1	<0.300	5.00	0.300	ug/L	08.27.18 21.09	E8	1

Certificate of Analytical Results 595905

AMEC Foster Wheeler, Phoenix, AZ

Cave Creek Landfill - Maricopa

Sample Id: **DUP01-081418** Matrix: Water Date Received:08.15.18 17.25
Lab Sample Id: 595905-009 Date Collected: 08.14.18 14.30

Analytical Method: VOCs by SW 8260B Prep Method: SW5030C
Tech: MNI % Solids:
Analyst: MNI Date Prep: 08.27.18 10.50
Seq Number: 3061308 SUB: AZ0765

Dilution Analysis:
Seq#: 3061683 Date Analyzed: 08/30/18 01:06 Date Prep: 08/29/18 19:56

Parameter	Cas Number	Result	RL	MDL	Units	Analysis Date	Flag	Dil
1,3-Butadiene	106-99-0	<0.276	5.00	0.276	ug/L	08.27.18 21.09	E8	1
Cyclohexane	110-82-7	**0.440**	5.00	0.115	ug/L	08.27.18 21.09	E4	1
Dicyclopentadiene	77-73-6	<0.0540	5.00	0.0540	ug/L	08.27.18 21.09	E8	1
Methylcyclohexane	108-87-2	<0.117	5.00	0.117	ug/L	08.27.18 21.09	E8	1
n-Hexane	110-54-3	<0.0920	5.00	0.0920	ug/L	08.27.18 21.09	E8	1
4-Ethyltoluene	622-96-8	Not Present			ug/L	08.27.18 21.09	T4E8	1
Propene	115-07-1	Not Present			ug/L	08.27.18 21.09	T4E8	1

Surrogate	% Recovery	Units	Limits	Analysis Date	Flag
4-Bromofluorobenzene	95	%	74-124	08.27.18 21.09	
Dibromofluoromethane	97	%	75-131	08.27.18 21.09	
1,2-Dichloroethane-D4	89	%	63-144	08.27.18 21.09	
Toluene-D8	41	%	80-117	08.27.18 21.09	S6

Certificate of Analytical Results 595905

AMEC Foster Wheeler, Phoenix, AZ

Cave Creek Landfill - Maricopa

Sample Id: **DUP01-081418** Matrix: Water Date Received:08.15.18 17.25
Lab Sample Id: 595905-009 Date Collected: 08.14.18 14.30

Analytical Method: Total Metals by SW 6010C Prep Method: SW3010A
Tech: MLI % Solids:
Analyst: DEP Date Prep: 08.23.18 09.30
Seq Number: 3061039 SUB: AZ0765

Parameter	Cas Number	Result	RL	MDL	Units	Analysis Date	Flag	Dil
Antimony	7440-36-0	<0.00589	0.0200	0.00589	mg/L	08.23.18 23.14	E8	1
Arsenic	7440-38-2	<0.00550	0.0200	0.00550	mg/L	08.23.18 23.14	E8	1
Barium	7440-39-3	**0.0107**	0.0100	0.00135	mg/L	08.23.18 23.14		1
Cadmium	7440-43-9	<0.00243	0.0100	0.00243	mg/L	08.23.18 23.14	E8	1
Chromium	7440-47-3	<0.000811	0.0100	0.000811	mg/L	08.23.18 23.14	E8	1
Cobalt	7440-48-4	<0.000673	0.0100	0.000673	mg/L	08.23.18 23.14	E8	1
Copper	7440-50-8	<0.00544	0.0200	0.00544	mg/L	08.23.18 23.14	E8	1
Lead	7439-92-1	<0.00237	0.0150	0.00237	mg/L	08.23.18 23.14	E8	1
Nickel	7440-02-0	<0.00307	0.0100	0.00307	mg/L	08.23.18 23.14	E8	1
Selenium	7782-49-2	<0.00439	0.0300	0.00439	mg/L	08.23.18 23.14	E8	1
Silver	7440-22-4	<0.00559	0.0300	0.00559	mg/L	08.23.18 23.14	E8	1
Thallium	7440-28-0	<0.00621	0.0200	0.00621	mg/L	08.23.18 23.14	E8	1
Titanium	7440-32-6	<0.00156	0.180	0.00156	mg/L	08.23.18 23.14	E8	1
Vanadium	7440-62-2	<0.00518	0.0900	0.00518	mg/L	08.23.18 23.14	E8	1
Zinc	7440-66-6	**0.171**	0.0300	0.00391	mg/L	08.23.18 23.14		1

Analytical Method: Alkalinity by SM 2320B
Tech: MON % Solids:
Analyst: TNL
Seq Number: 3060957

Parameter	Cas Number	Result	RL	MDL	Units	Analysis Date	Flag	Dil
Alkalinity, Total (CaCO3)	1640192	**130**	20.0	4.00	mg/L	08.22.18 15.00		1
Alkalinity, Bicarbonate (as CaCO3	471-34-1	**130**	20.0	4.00	mg/L	08.22.18 15.00		1
Alkalinity, Carbonate (as CaCO3	3812-32-6	<4.00	20.0	4.00	mg/L	08.22.18 15.00	E8	1
Alkalinity, Hydroxide (as CaCO3	14280-30-9	<4.00	20.0	4.00	mg/L	08.22.18 15.00	E8	1

Certificate of Analytical Results 595905

AMEC Foster Wheeler, Phoenix, AZ

Cave Creek Landfill - Maricopa

Sample Id: **DUP01-081418** Matrix: Water Date Received:08.15.18 17.25
Lab Sample Id: 595905-009 Date Collected: 08.14.18 14.30

Analytical Method: Specific Conductance by SM 2510B
Tech: MON % Solids:
Analyst: TNL
Seq Number: 3060443

Parameter	Cas Number	Result	RL	MDL	Units	Analysis Date	Flag	Dil
Conductivity	COND	**305**	1.00	1.00	uS/cm	08.17.18 14.30		1

Analytical Method: TDS by SM 2540C
Tech: MON % Solids:
Analyst: TNL
Seq Number: 3060722

Parameter	Cas Number	Result	RL	MDL	Units	Analysis Date	Flag	Dil
Total Dissolved Solids	1642222	**184**	10.0	10.0	mg/L	08.17.18 10.00		1

Analytical Method: pH by SM 4500-H
Tech: MON % Solids:
Analyst: TNL
Seq Number: 3060445

Parameter	Cas Number	Result	RL	MDL	Units	Analysis Date	Flag	Dil
pH	12408-02-5	**8.84**	1.00	1.00	SU	08.17.18 11.15	H5	1
Temperature	TEMP	**23.2**	1.0	1.0	Deg C	08.17.18 11.15	H5	1

Analytical Method: Inorganic Anions by EPA 300 Prep Method: E300P
Tech: MAB % Solids:
Analyst: MAB Date Prep: 08.24.18 15.40
Seq Number: 3061196 SUB: AZ0765

Parameter	Cas Number	Result	RL	MDL	Units	Analysis Date	Flag	Dil
Chloride	16887-00-6	**21.2**	0.500	0.0280	mg/L	08.25.18 00.55		1
Fluoride	16984-48-8	**0.0418**	0.500	0.0360	mg/L	08.25.18 00.55	E4	1
Sulfate	14808-79-8	**0.769**	0.500	0.0460	mg/L	08.25.18 00.55		1

Certificate of Analytical Results 595905

AMEC Foster Wheeler, Phoenix, AZ

Cave Creek Landfill - Maricopa

Sample Id: **DUP01-081418** Matrix: Water Date Received:08.15.18 17.25
Lab Sample Id: 595905-009 Date Collected: 08.14.18 14.30

Analytical Method: Nitrite by SM 4500-NO2B
Tech: MON % Solids:
Analyst: TNL
Seq Number: 3060350

Parameter	Cas Number	Result	RL	MDL	Units	Analysis Date	Flag	Dil
Nitrite as N	14797-65-0	**0.0108**	0.0200	0.0100	mg/L	08.16.18 14.46	H3E4	1

Analytical Method: Nitrogen, Nitrate-Nitrite by EPA 353.2 Prep Method: E353.2P
Tech: KCS % Solids:
Analyst: KCS Date Prep: 08.21.18 09.30
Seq Number: 3060750 SUB: AZ0765

Parameter	Cas Number	Result	RL	MDL	Units	Analysis Date	Flag	Dil
Nitrate as N	14797-55-8	**0.147**	0.100	0.0283	mg/L	08.21.18 12.33		1
Nitrogen, Nitrate-Nitrite	7727-37-9	**0.158**	0.100	0.0283	mg/L	08.21.18 12.33		1

QC Summary 595905

AMEC Foster Wheeler

Cave Creek Landfill - Maricopa

Analytical Method: VOCs by SW 8260B Prep Method: SW5030C

Seq Number: 3061308 Matrix: Water Date Prep: 08.27.18

MB Sample Id: 7661196-1-BLK LCS Sample Id: 7661196-1-BKS LCSD Sample Id: 7661196-1-BSD

Parameter	MB Result	Spike Amount	LCS Result	LCS %Rec	LCSD Result	LCSD %Rec	Limits	%RPD	RPD Limit	Units	Analysis Date	Flag
1,1,1,2-Tetrachloroethane	<0.100	20.0	20.4	102	19.2	96	70-130	6	20	ug/L	08.27.18 13:13	
1,1,1-Trichloroethane	<0.200	20.0	19.5	98	19.7	99	70-130	1	20	ug/L	08.27.18 13:13	
1,1,2,2-Tetrachloroethane	<0.100	20.0	19.4	97	22.2	111	70-130	13	20	ug/L	08.27.18 13:13	
1,1,2-Trichloroethane	<0.0900	20.0	19.2	96	21.8	109	70-130	13	20	ug/L	08.27.18 13:13	
1,1-Dichloroethane	<0.0700	20.0	21.4	107	19.4	97	70-130	10	20	ug/L	08.27.18 13:13	
1,1-Dichloroethene	<0.200	20.0	21.0	105	18.5	93	70-130	13	21	ug/L	08.27.18 13:13	
1,1-Dichloropropene	<0.200	20.0	18.9	95	18.9	95	70-130	0	20	ug/L	08.27.18 13:13	
1,2,3-Trichlorobenzene	<0.200	20.0	19.3	97	17.8	89	70-130	8	27	ug/L	08.27.18 13:13	
1,2,3-Trichloropropane	<0.200	20.0	19.6	98	20.3	102	70-130	4	20	ug/L	08.27.18 13:13	
1,2,4-Trichlorobenzene	<0.0700	20.0	19.2	96	17.8	89	70-130	8	20	ug/L	08.27.18 13:13	
1,2,4-Trimethylbenzene	<0.0700	20.0	19.5	98	21.1	106	70-130	8	20	ug/L	08.27.18 13:13	
1,2-Dibromo-3-Chloropropane	<0.300	20.0	16.3	82	18.3	92	70-130	12	21	ug/L	08.27.18 13:13	
1,2-Dibromoethane	<0.200	20.0	19.7	99	21.0	105	70-130	6	20	ug/L	08.27.18 13:13	
1,2-Dichlorobenzene	<0.0800	20.0	19.5	98	19.4	97	70-130	1	20	ug/L	08.27.18 13:13	
1,2-Dichloroethane	<0.100	20.0	18.3	92	19.3	97	70-130	5	20	ug/L	08.27.18 13:13	
1,2-Dichloropropane	<0.0900	20.0	22.7	114	24.3	122	70-130	7	20	ug/L	08.27.18 13:13	
1,3,5-Trimethylbenzene	<0.0700	20.0	19.4	97	20.9	105	70-130	7	20	ug/L	08.27.18 13:13	
1,3-Dichlorobenzene	<0.0600	20.0	19.3	97	19.0	95	70-130	2	20	ug/L	08.27.18 13:13	
1,3-Dichloropropane	<0.0700	20.0	19.4	97	22.8	114	70-130	16	20	ug/L	08.27.18 13:13	
1,4-Dichlorobenzene	<0.200	20.0	19.4	97	19.7	99	70-130	2	20	ug/L	08.27.18 13:13	
2,2-Dichloropropane	<0.200	20.0	20.6	103	20.2	101	70-130	2	24	ug/L	08.27.18 13:13	
2-Butanone	<0.300	40.0	43.4	109	41.8	105	51-116	4	27	ug/L	08.27.18 13:13	
2-Chlorotoluene	<0.0800	20.0	19.6	98	22.3	112	70-130	13	20	ug/L	08.27.18 13:13	
2-Hexanone	<0.200	40.0	31.8	80	43.3	108	59-101	31	20	ug/L	08.27.18 13:13	L1R2
4-Chlorotoluene	<0.0700	20.0	20.0	100	22.4	112	70-130	11	28	ug/L	08.27.18 13:13	
4-Methyl-2-Pentanone	<0.200	40.0	44.6	112	53.5	134	57-106	18	21	ug/L	08.27.18 13:13	L1
Acetone	<0.600	40.0	37.9	95	39.1	98	47-128	3	28	ug/L	08.27.18 13:13	
Benzene	<0.100	20.0	20.1	101	20.5	103	70-130	2	20	ug/L	08.27.18 13:13	
Bromobenzene	<0.0900	20.0	19.6	98	18.0	90	70-130	9	20	ug/L	08.27.18 13:13	
Bromochloromethane	<0.200	20.0	18.8	94	19.5	98	70-130	4	24	ug/L	08.27.18 13:13	
Bromodichloromethane	<0.0800	20.0	21.3	107	23.2	116	70-130	9	20	ug/L	08.27.18 13:13	
Bromoform	<0.100	20.0	20.7	104	19.8	99	66-132	4	20	ug/L	08.27.18 13:13	
Bromomethane	<0.300	20.0	17.2	86	15.8	79	63-130	8	25	ug/L	08.27.18 13:13	
Carbon Disulfide	<0.0900	20.0	19.9	100	18.4	92	70-130	8	22	ug/L	08.27.18 13:13	
Carbon Tetrachloride	<0.200	20.0	18.9	95	19.2	96	70-130	2	21	ug/L	08.27.18 13:13	
Chlorobenzene	<0.0700	20.0	18.8	94	19.7	99	70-130	5	20	ug/L	08.27.18 13:13	
Chloroethane	<0.600	20.0	16.7	84	16.3	82	70-140	2	24	ug/L	08.27.18 13:13	
Chloroform	1.94	20.0	19.0	95	19.1	96	70-130	1	24	ug/L	08.27.18 13:13	
Chloromethane	<0.200	20.0	21.3	107	24.7	124	25-130	15	26	ug/L	08.27.18 13:13	
cis-1,2-Dichloroethene	<0.200	20.0	20.0	100	19.6	98	70-130	2	24	ug/L	08.27.18 13:13	
cis-1,3-Dichloropropene	<0.0800	20.0	23.0	115	25.8	129	70-130	11	20	ug/L	08.27.18 13:13	
Dibromochloromethane	<0.0700	20.0	17.6	88	17.3	87	70-130	2	20	ug/L	08.27.18 13:13	
Dibromomethane	<0.200	20.0	19.6	98	21.7	109	70-130	10	23	ug/L	08.27.18 13:13	
Dichlorodifluoromethane	<0.200	20.0	16.9	85	18.2	91	25-136	7	27	ug/L	08.27.18 13:13	
Ethylbenzene	<0.0900	20.0	18.7	94	20.6	103	70-130	10	20	ug/L	08.27.18 13:13	
Hexachlorobutadiene	<0.200	20.0	20.1	101	17.0	85	63-139	17	22	ug/L	08.27.18 13:13	
Iodomethane (Methyl Iodide)	<0.300	20.0	14.4	72	14.7	74	70-130	2	22	ug/L	08.27.18 13:13	
isopropylbenzene	<0.0800	20.0	19.9	100	21.1	106	70-130	6	20	ug/L	08.27.18 13:13	
m,p-Xylenes	<0.0900	40.0	37.9	95	40.4	101	70-130	6	20	ug/L	08.27.18 13:13	

MS/MSD Percent Recovery	[D] = 100*(C-A) / B	LCS = Laboratory Control Sample	MS = Matrix Spike
Relative Percent Difference	RPD = 200* | (C-E) / (C+E) |	A = Parent Result	B = Spike Added
LCS/LCSD Recovery	[D] = 100 * (C) / [B]	C = MS/LCS Result	D = MSD/LCSD % Rec
Log Difference	Log Diff. = Log(Sample Duplicate) - Log(Original Sample)	E = MSD/LCSD Result	

QC Summary 595905

AMEC Foster Wheeler

Cave Creek Landfill - Maricopa

Analytical Method: VOCs by SW 8260B Prep Method: SW5030C

Seq Number: 3061308 Matrix: Water Date Prep: 08.27.18

MB Sample Id: 7661196-1-BLK LCS Sample Id: 7661196-1-BKS LCSD Sample Id: 7661196-1-BSD

Parameter	MB Result	Spike Amount	LCS Result	LCS %Rec	LCSD Result	LCSD %Rec	Limits	%RPD	RPD Limit	Units	Analysis Date	Flag
Methylene Chloride	0.890	20.0	20.2	101	18.8	94	70-130	7	20	ug/L	08.27.18 13:13	
MTBE	<0.100	20.0	20.7	104	19.1	96	70-130	8	21	ug/L	08.27.18 13:13	
Naphthalene	<0.200	20.0	18.5	93	19.3	97	70-130	4	27	ug/L	08.27.18 13:13	
n-Butylbenzene	<0.200	20.0	19.3	97	22.0	110	70-130	13	20	ug/L	08.27.18 13:13	
n-Propylbenzene	<0.0800	20.0	19.6	98	23.2	116	70-130	17	20	ug/L	08.27.18 13:13	
o-Xylene	<0.0900	20.0	18.7	94	20.2	101	70-130	8	20	ug/L	08.27.18 13:13	
p-Cymene (p-Isopropyltoluene)	<0.100	20.0	19.1	96	20.0	100	70-130	5	20	ug/L	08.27.18 13:13	
Sec-Butylbenzene	<0.100	20.0	19.1	96	21.6	108	70-130	12	20	ug/L	08.27.18 13:13	
Styrene	<0.0800	20.0	18.7	94	20.2	101	70-130	8	20	ug/L	08.27.18 13:13	
tert-Butylbenzene	<0.200	20.0	20.3	102	21.0	105	70-130	3	20	ug/L	08.27.18 13:13	
Tetrachloroethylene	<0.0800	20.0	18.5	93	16.6	83	70-130	11	20	ug/L	08.27.18 13:13	
Toluene	<0.0700	20.0	24.3	122	19.2	96	70-130	23	20	ug/L	08.27.18 13:13	R7
trans-1,2-dichloroethene	<0.0900	20.0	21.5	108	18.9	95	70-130	13	21	ug/L	08.27.18 13:13	
Trichloroethene	<0.200	20.0	19.7	99	20.9	105	70-130	6	20	ug/L	08.27.18 13:13	
Trichlorofluoromethane	<0.400	20.0	16.1	81	18.2	91	70-130	12	22	ug/L	08.27.18 13:13	
Vinyl Acetate	<0.200	20.0	22.8	114	21.2	106	46-172	7	22	ug/L	08.27.18 13:13	
Vinyl Chloride	<0.100	20.0	19.6	98	21.2	106	41-132	8	25	ug/L	08.27.18 13:13	
trans-1,3-dichloropropene	<0.0600	20.0	20.8	104	18.0	90	70-130	14	20	ug/L	08.27.18 13:13	
1,1,2-Trichloro-1,2,2-Trifluoroethane	<0.300	20.0	16.6	83	16.6	83	64-125	0	22	ug/L	08.27.18 13:13	
1,3-Butadiene	<0.276	20.0	21.7	109	22.8	114	58-134	5	20	ug/L	08.27.18 13:13	
Cyclohexane	<0.115	20.0	20.1	101	19.7	99	70-130	2	21	ug/L	08.27.18 13:13	
Dicyclopentadiene	<0.0540	20.0	18.9	95	23.8	119	70-130	23	20	ug/L	08.27.18 13:13	R7
Methylcyclohexane	<0.117	20.0	20.7	104	22.2	111	70-130	7	20	ug/L	08.27.18 13:13	
n-Hexane	<0.0920	20.0	21.1	106	18.7	94	67-130	12	20	ug/L	08.27.18 13:13	

Surrogate	MB %Rec	MB Flag	LCS %Rec	LCS Flag	LCSD %Rec	LCSD Flag	Limits	Units	Analysis Date
4-Bromofluorobenzene	94		78		93		74-124	%	08.27.18 13:13
Dibromofluoromethane	94		83		95		75-131	%	08.27.18 13:13
1,2-Dichloroethane-D4	84		71		82		63-144	%	08.27.18 13:13
Toluene-D8	98		80		99		80-117	%	08.27.18 13:13

MS/MSD Percent Recovery	[D] = 100*(C-A) / B	LCS = Laboratory Control Sample	MS = Matrix Spike
Relative Percent Difference	RPD = 200* | (C-E) / (C+E) |	A = Parent Result	B = Spike Added
LCS/LCSD Recovery	[D] = 100 * (C) / [B]	C = MS/LCS Result	D = MSD/LCSD % Rec
Log Difference	Log Diff. = Log(Sample Duplicate) - Log(Original Sample)	E = MSD/LCSD Result	

QC Summary 595905

AMEC Foster Wheeler

Cave Creek Landfill - Maricopa

Analytical Method: VOCs by SW 8260B | Prep Method: SW5030B

Seq Number: 3061633 | Matrix: Water | Date Prep: 08.29.18

MB Sample Id: 7661375-1-BLK | LCS Sample Id: 7661375-1-BKS | LCSD Sample Id: 7661375-1-BSD

Parameter	MB Result	Spike Amount	LCS Result	LCS %Rec	LCSD Result	LCSD %Rec	Limits	%RPD	RPD Limit	Units	Analysis Date	Flag
1,1,1,2-Tetrachloroethane	<0.195	50.0	45.0	90	47.7	95	78-131	6	25	ug/L	08.29.18 08:22	
1,1,1-Trichloroethane	<0.130	50.0	47.6	95	49.2	98	72-124	3	25	ug/L	08.29.18 08:22	
1,1,2,2-Tetrachloroethane	<0.365	50.0	48.2	96	49.1	98	80-133	2	25	ug/L	08.29.18 08:22	
1,1,2-Trichloroethane	<0.272	50.0	45.8	92	46.7	93	71-135	2	25	ug/L	08.29.18 08:22	
1,1-Dichloroethane	<0.182	50.0	45.6	91	47.1	94	75-125	3	25	ug/L	08.29.18 08:22	
1,1-Dichloroethene	<0.178	50.0	44.6	89	46.6	93	68-116	4	25	ug/L	08.29.18 08:22	
1,1-Dichloropropene	<0.257	50.0	44.8	90	46.6	93	69-124	4	25	ug/L	08.29.18 08:22	
1,2,3-Trichlorobenzene	<2.00	50.0	53.5	107	56.4	113	76-126	5	25	ug/L	08.29.18 08:22	
1,2,3-Trichloropropane	<0.214	50.0	46.6	93	49.8	100	75-134	7	25	ug/L	08.29.18 08:22	
1,2,4-Trichlorobenzene	<2.00	50.0	49.4	99	51.6	103	77-127	4	25	ug/L	08.29.18 08:22	
1,2,4-Trimethylbenzene	<0.113	50.0	47.3	95	49.0	98	79-132	4	25	ug/L	08.29.18 08:22	
1,2-Dibromo-3-Chloropropane	<0.707	50.0	49.4	99	51.7	103	62-134	5	25	ug/L	08.29.18 08:22	
1,2-Dibromoethane	<0.380	50.0	45.9	92	48.3	97	77-129	5	25	ug/L	08.29.18 08:22	
1,2-Dichlorobenzene	<0.175	50.0	45.7	91	48.2	96	81-123	5	25	ug/L	08.29.18 08:22	
1,2-Dichloroethane	<0.283	50.0	45.3	91	47.9	96	64-130	6	25	ug/L	08.29.18 08:22	
1,2-Dichloropropane	<0.170	50.0	45.0	90	48.5	97	72-127	7	25	ug/L	08.29.18 08:22	
1,3,5-Trimethylbenzene	<0.178	50.0	46.3	93	47.1	94	72-139	2	25	ug/L	08.29.18 08:22	
1,3-Dichlorobenzene	<0.169	50.0	45.4	91	48.7	97	82-126	7	25	ug/L	08.29.18 08:22	
1,3-Dichloropropane	<0.199	50.0	44.2	88	45.7	91	79-133	3	25	ug/L	08.29.18 08:22	
1,4-Dichlorobenzene	<0.222	50.0	45.8	92	47.7	95	80-119	4	25	ug/L	08.29.18 08:22	
2,2-Dichloropropane	<0.154	50.0	48.5	97	50.4	101	71-134	4	25	ug/L	08.29.18 08:22	
2-Butanone	<1.32	250	226	90	230	92	49-135	2	25	ug/L	08.29.18 08:22	
2-Chlorotoluene	<0.293	50.0	43.7	87	46.3	93	83-128	6	25	ug/L	08.29.18 08:22	
2-Hexanone	<1.05	250	247	99	250	100	56-134	1	25	ug/L	08.29.18 08:22	
4-Chlorotoluene	<0.114	50.0	47.4	95	50.3	101	81-125	6	25	ug/L	08.29.18 08:22	
4-Methyl-2-Pentanone	<0.874	250	235	94	244	98	63-127	4	25	ug/L	08.29.18 08:22	
Acetone	<20.0	250	249	100	268	107	40-142	7	25	ug/L	08.29.18 08:22	
Benzene	<0.185	50.0	44.3	89	46.5	93	68-123	5	25	ug/L	08.29.18 08:22	
Bromobenzene	<0.258	50.0	45.7	91	47.9	96	83-124	5	25	ug/L	08.29.18 08:22	
Bromochloromethane	<0.328	50.0	45.3	91	47.2	94	68-119	4	25	ug/L	08.29.18 08:22	
Bromodichloromethane	<0.164	50.0	45.7	91	49.3	99	72-132	8	25	ug/L	08.29.18 08:22	
Bromoform	<0.348	50.0	48.9	98	49.7	99	65-136	2	25	ug/L	08.29.18 08:22	
Bromomethane	<0.127	50.0	55.5	111	57.0	114	48-120	3	25	ug/L	08.29.18 08:22	
Carbon Disulfide	<0.173	50.0	44.0	88	46.9	94	53-138	6	25	ug/L	08.29.18 08:22	
Carbon Tetrachloride	<0.243	50.0	46.3	93	48.4	97	68-135	4	25	ug/L	08.29.18 08:22	
Chlorobenzene	<0.110	50.0	44.5	89	46.0	92	78-124	3	25	ug/L	08.29.18 08:22	
Chloroethane	<0.190	50.0	49.5	99	49.6	99	55-120	0	25	ug/L	08.29.18 08:22	
Chloroform	<0.107	50.0	45.3	91	47.7	95	71-119	5	25	ug/L	08.29.18 08:22	
Chloromethane	<5.00	50.0	43.4	87	44.7	89	54-114	3	25	ug/L	08.29.18 08:22	
cis-1,2-Dichloroethene	<0.162	50.0	45.6	91	47.6	95	74-130	4	25	ug/L	08.29.18 08:22	
cis-1,3-Dichloropropene	<0.126	50.0	48.1	96	50.1	100	74-138	4	25	ug/L	08.29.18 08:22	
Dibromochloromethane	<0.212	50.0	46.4	93	49.7	99	74-135	7	25	ug/L	08.29.18 08:22	
Dibromomethane	<0.186	50.0	44.8	90	47.1	94	71-124	5	25	ug/L	08.29.18 08:22	
Dichlorodifluoromethane	<0.148	50.0	50.1	100	52.9	106	59-121	5	25	ug/L	08.29.18 08:22	
Ethylbenzene	<0.190	50.0	44.7	89	46.4	93	69-131	4	25	ug/L	08.29.18 08:22	
Hexachlorobutadiene	<2.00	50.0	52.4	105	54.7	109	74-130	4	25	ug/L	08.29.18 08:22	
Iodomethane (Methyl Iodide)	<0.170	50.0	46.2	92	49.2	98	66-115	6	25	ug/L	08.29.18 08:22	
isopropylbenzene	<0.218	50.0	45.7	91	47.7	95	66-133	4	25	ug/L	08.29.18 08:22	
m,p-Xylenes	<1.00	100	89.5	90	93.9	94	69-132	5	25	ug/L	08.29.18 08:22	

MS/MSD Percent Recovery	[D] = 100*(C-A) / B	LCS = Laboratory Control Sample	MS = Matrix Spike
Relative Percent Difference	RPD = 200* | (C-E) / (C+E) |	A = Parent Result	B = Spike Added
LCS/LCSD Recovery	[D] = 100 * (C) / [B]	C = MS/LCS Result	D = MSD/LCSD % Rec
Log Difference	Log Diff. = Log(Sample Duplicate) - Log(Original Sample)	E = MSD/LCSD Result	

1.000

QC Summary 595905

AMEC Foster Wheeler

Cave Creek Landfill - Maricopa

Analytical Method: VOCs by SW 8260B | Prep Method: SW5030B

Seq Number: 3061633 | Matrix: Water | Date Prep: 08.29.18

MB Sample Id: 7661375-1-BLK | LCS Sample Id: 7661375-1-BKS | LCSD Sample Id: 7661375-1-BSD

Parameter	MB Result	Spike Amount	LCS Result	LCS %Rec	LCSD Result	LCSD %Rec	Limits	%RPD	RPD Limit	Units	Analysis Date	Flag
Methylene Chloride	<2.00	50.0	49.4	99	50.8	102	60-121	3	25	ug/L	08.29.18 08:22	
MTBE	<0.500	50.0	47.2	94	48.9	98	60-152	4	25	ug/L	08.29.18 08:22	
Naphthalene	<2.00	50.0	55.4	111	56.2	112	69-140	1	25	ug/L	08.29.18 08:22	
n-Butylbenzene	<2.00	50.0	48.5	97	50.6	101	82-128	4	25	ug/L	08.29.18 08:22	
n-Propylbenzene	<0.173	50.0	47.0	94	48.9	98	86-129	4	25	ug/L	08.29.18 08:22	
o-Xylene	<0.500	50.0	45.0	90	47.2	94	67-132	5	25	ug/L	08.29.18 08:22	
p-Cymene (p-Isopropyltoluene)	<0.150	50.0	48.4	97	50.0	100	85-129	3	25	ug/L	08.29.18 08:22	
Sec-Butylbenzene	<0.124	50.0	47.9	96	49.7	99	83-130	4	25	ug/L	08.29.18 08:22	
Styrene	<0.197	50.0	46.3	93	47.3	95	79-128	2	25	ug/L	08.29.18 08:22	
tert-Butylbenzene	<0.177	50.0	47.1	94	50.0	100	83-131	6	25	ug/L	08.29.18 08:22	
Tetrachloroethylene	<0.347	50.0	42.8	86	45.1	90	79-122	5	25	ug/L	08.29.18 08:22	
Toluene	<0.500	50.0	43.5	87	45.1	90	62-132	4	25	ug/L	08.29.18 08:22	
trans-1,2-dichloroethene	<0.167	50.0	43.3	87	45.3	91	64-109	5	25	ug/L	08.29.18 08:22	
Trichloroethene	<0.218	50.0	44.0	88	47.3	95	74-123	7	25	ug/L	08.29.18 08:22	
Trichlorofluoromethane	<0.191	50.0	49.4	99	50.3	101	70-143	2	25	ug/L	08.29.18 08:22	
Vinyl Acetate	<0.583	250	237	95	240	96	63-145	1	25	ug/L	08.29.18 08:22	
Vinyl Chloride	<0.232	50.0	48.2	96	50.3	101	59-124	4	25	ug/L	08.29.18 08:22	
trans-1,3-dichloropropene	<0.198	50.0	47.6	95	49.6	99	70-132	4	25	ug/L	08.29.18 08:22	
1,1,2-Trichloro-1,2,2-Trifluoroethane	<0.175	50.0	50.2	100	50.7	101	73-118	1	25	ug/L	08.29.18 08:22	
1,3-Butadiene	<2.52	50.0	48.2	96	47.7	95	70-150	1	25	ug/L	08.29.18 08:22	
Cyclohexane	<0.309	50.0	49.1	98	48.6	97	65-121	1	25	ug/L	08.29.18 08:22	
Dicyclopentadiene	<5.00	50.0	46.4	93	48.6	97	70-120	5	25	ug/L	08.29.18 08:22	
Methylcyclohexane	<0.228	50.0	48.9	98	49.4	99	67-118	1	25	ug/L	08.29.18 08:22	
n-Hexane	<5.00	50.0	52.3	105	51.1	102	72-125	2	25	ug/L	08.29.18 08:22	

Surrogate	MB %Rec	MB Flag	LCS %Rec	LCS Flag	LCSD %Rec	LCSD Flag	Limits	Units	Analysis Date
Dibromofluoromethane	95		104		101		75-131	%	08.29.18 08:22
1,2-Dichloroethane-D4	98		100		99		63-144	%	08.29.18 08:22
Toluene-D8	105		97		96		80-117	%	08.29.18 08:22
4-Bromofluorobenzene	100		103		102		74-124	%	08.29.18 08:22

MS/MSD Percent Recovery	[D] = 100*(C-A) / B	LCS = Laboratory Control Sample	MS = Matrix Spike
Relative Percent Difference	RPD = 200* | (C-E) / (C+E) |	A = Parent Result	B = Spike Added
LCS/LCSD Recovery	[D] = 100 * (C) / [B]	C = MS/LCS Result	D = MSD/LCSD % Rec
Log Difference	Log Diff. = Log(Sample Duplicate) - Log(Original Sample)	E = MSD/LCSD Result	

1.000

QC Summary 595905

AMEC Foster Wheeler

Cave Creek Landfill - Maricopa

Analytical Method: **VOCs by SW 8260B** Prep Method: SW5030C

Seq Number: 3061683 Matrix: Water Date Prep: 08.29.18

MB Sample Id: 7661413-1-BLK LCS Sample Id: 7661413-1-BKS LCSD Sample Id: 7661413-1-BSD

Parameter	MB Result	Spike Amount	LCS Result	LCS %Rec	LCSD Result	LCSD %Rec	Limits	%RPD	RPD Limit	Units	Analysis Date	Flag
m,p-Xylenes	<0.0900	40.0	44.4	111	43.3	108	70-130	3	20	ug/L	08.29.18 22:22	
o-Xylene	<0.0900	20.0	22.7	114	21.9	110	70-130	4	20	ug/L	08.29.18 22:22	
Trichloroethene	<0.200	20.0	21.5	108	21.4	107	70-130	0	20	ug/L	08.29.18 22:22	

Surrogate	MB %Rec	MB Flag	LCS %Rec	LCS Flag	LCSD %Rec	LCSD Flag	Limits	Units	Analysis Date
4-Bromofluorobenzene	94		95		98		74-124	%	08.29.18 22:22
Dibromofluoromethane	100		101		102		75-131	%	08.29.18 22:22
1,2-Dichloroethane-D4	102		99		101		63-144	%	08.29.18 22:22
Toluene-D8	100		99		102		80-117	%	08.29.18 22:22

MS/MSD Percent Recovery	[D] = 100*(C-A) / B	LCS = Laboratory Control Sample	MS = Matrix Spike
Relative Percent Difference	RPD = 200* | (C-E) / (C+E) |	A = Parent Result	B = Spike Added
LCS/LCSD Recovery	[D] = 100 * (C) / [B]	C = MS/LCS Result	D = MSD/LCSD % Rec
Log Difference	Log Diff. = Log(Sample Duplicate) - Log(Original Sample)	E = MSD/LCSD Result	

QC Summary 595905

AMEC Foster Wheeler

Cave Creek Landfill - Maricopa

Analytical Method: **VOCs by SW 8260B** Prep Method: SW5030C

Seq Number: 3061308 Matrix: Water Date Prep: 08.27.18

Parent Sample Id: 595905-002 MS Sample Id: 595905-002 S MSD Sample Id: 595905-002 SD

Parameter	Parent Result	Spike Amount	MS Result	MS %Rec	MSD Result	MSD %Rec	Limits	%RPD	RPD Limit	Units	Analysis Date	Flag
1,1,1,2-Tetrachloroethane	<0.100	20.0	17.4	87	18.2	91	70-130	4	20	ug/L	08.27.18 14:27	
1,1,1-Trichloroethane	<0.200	20.0	18.1	91	16.3	82	70-130	10	20	ug/L	08.27.18 14:27	
1,1,2,2-Tetrachloroethane	<0.100	20.0	21.0	105	18.2	91	70-130	14	20	ug/L	08.27.18 14:27	
1,1,2-Trichloroethane	<0.0900	20.0	20.4	102	17.5	88	70-130	15	20	ug/L	08.27.18 14:27	
1,1-Dichloroethane	<0.0700	20.0	19.0	95	16.9	85	70-130	12	20	ug/L	08.27.18 14:27	
1,1-Dichloroethene	<0.200	20.0	19.1	96	15.6	78	63-144	20	20	ug/L	08.27.18 14:27	
1,1-Dichloropropene	<0.200	20.0	17.8	89	16.3	82	70-130	9	20	ug/L	08.27.18 14:27	
1,2,3-Trichlorobenzene	<0.200	20.0	17.3	87	17.1	86	70-130	1	24	ug/L	08.27.18 14:27	
1,2,3-Trichloropropane	<0.200	20.0	19.8	99	18.4	92	70-130	7	20	ug/L	08.27.18 14:27	
1,2,4-Trichlorobenzene	<0.0700	20.0	16.8	84	17.5	88	70-130	4	20	ug/L	08.27.18 14:27	
1,2,4-Trimethylbenzene	<0.0700	20.0	18.8	94	17.0	85	70-130	10	22	ug/L	08.27.18 14:27	
1,2-Dibromo-3-Chloropropane	<0.300	20.0	16.0	80	16.2	81	70-130	1	22	ug/L	08.27.18 14:27	
1,2-Dibromoethane	<0.200	20.0	19.4	97	18.3	92	70-130	6	20	ug/L	08.27.18 14:27	
1,2-Dichlorobenzene	<0.0800	20.0	17.9	90	16.9	85	70-130	6	20	ug/L	08.27.18 14:27	
1,2-Dichloroethane	<0.100	20.0	17.1	86	17.3	87	70-130	1	20	ug/L	08.27.18 14:27	
1,2-Dichloropropane	<0.0900	20.0	20.8	104	18.2	91	70-130	13	20	ug/L	08.27.18 14:27	
1,3,5-Trimethylbenzene	<0.0700	20.0	18.9	95	16.8	84	70-130	12	20	ug/L	08.27.18 14:27	
1,3-Dichlorobenzene	<0.0600	20.0	17.3	87	16.6	83	70-130	4	20	ug/L	08.27.18 14:27	
1,3-Dichloropropane	<0.0700	20.0	21.1	106	17.7	89	70-130	18	20	ug/L	08.27.18 14:27	
1,4-Dichlorobenzene	<0.200	20.0	17.8	89	17.1	86	70-130	4	20	ug/L	08.27.18 14:27	
2,2-Dichloropropane	<0.200	20.0	18.3	92	17.3	87	70-130	6	20	ug/L	08.27.18 14:27	
2-Butanone	<0.300	40.0	47.8	120	37.0	93	40-133	25	22	ug/L	08.27.18 14:27	R5
2-Chlorotoluene	<0.0800	20.0	19.7	99	17.1	86	70-130	14	20	ug/L	08.27.18 14:27	
2-Hexanone	<0.200	40.0	40.6	102	31.9	80	61-106	24	33	ug/L	08.27.18 14:27	
4-Chlorotoluene	<0.0700	20.0	19.9	100	17.8	89	70-130	11	20	ug/L	08.27.18 14:27	
4-Methyl-2-Pentanone	<0.200	40.0	46.8	117	44.1	110	70-130	6	20	ug/L	08.27.18 14:27	
Acetone	42.4	40.0	70.2	70	63.0	52	7-174	11	20	ug/L	08.27.18 14:27	
Benzene	<0.100	20.0	18.7	94	17.1	86	70-130	9	20	ug/L	08.27.18 14:27	
Bromobenzene	<0.0900	20.0	17.3	87	17.2	86	70-130	1	20	ug/L	08.27.18 14:27	
Bromochloromethane	<0.200	20.0	17.0	85	16.8	84	70-130	1	22	ug/L	08.27.18 14:27	
Bromodichloromethane	<0.0800	20.0	19.1	96	18.1	91	70-130	5	20	ug/L	08.27.18 14:27	
Bromoform	<0.100	20.0	18.0	90	19.4	97	70-130	7	20	ug/L	08.27.18 14:27	
Bromomethane	<0.300	20.0	18.7	94	17.1	86	43-147	9	22	ug/L	08.27.18 14:27	
Carbon Disulfide	<0.0900	20.0	16.3	82	15.3	77	50-137	6	28	ug/L	08.27.18 14:27	
Carbon Tetrachloride	<0.200	20.0	17.0	85	17.0	85	67-136	0	20	ug/L	08.27.18 14:27	
Chlorobenzene	<0.0700	20.0	17.6	88	17.0	85	70-130	3	20	ug/L	08.27.18 14:27	
Chloroethane	<0.600	20.0	16.2	81	15.9	80	57-156	2	20	ug/L	08.27.18 14:27	
Chloroform	<0.0700	20.0	17.4	87	15.4	77	70-130	12	22	ug/L	08.27.18 14:27	
Chloromethane	1.93	20.0	23.4	107	19.7	89	24-129	17	22	ug/L	08.27.18 14:27	
cis-1,2-Dichloroethene	<0.200	20.0	18.6	93	17.0	85	70-130	9	20	ug/L	08.27.18 14:27	
cis-1,3-Dichloropropene	<0.0800	20.0	22.0	110	20.3	102	70-130	8	20	ug/L	08.27.18 14:27	
Dibromochloromethane	<0.0700	20.0	15.9	80	16.2	81	70-130	2	20	ug/L	08.27.18 14:27	
Dibromomethane	<0.200	20.0	18.7	94	17.8	89	70-130	5	20	ug/L	08.27.18 14:27	
Dichlorodifluoromethane	<0.200	20.0	16.2	81	15.3	77	21-138	6	33	ug/L	08.27.18 14:27	
Ethylbenzene	<0.0900	20.0	18.3	92	16.7	84	70-130	9	20	ug/L	08.27.18 14:27	
Hexachlorobutadiene	<0.200	20.0	16.8	84	17.0	85	64-143	1	20	ug/L	08.27.18 14:27	
Iodomethane (Methyl Iodide)	<0.300	20.0	14.1	71	14.1	71	59-133	0	20	ug/L	08.27.18 14:27	
isopropylbenzene	<0.0800	20.0	19.0	95	18.3	92	70-130	4	20	ug/L	08.27.18 14:27	
m,p-Xylenes	<0.0900	40.0	36.5	91	34.0	85	70-130	7	20	ug/L	08.27.18 14:27	

MS/MSD Percent Recovery	[D] = 100*(C-A) / B	LCS = Laboratory Control Sample	MS = Matrix Spike
Relative Percent Difference	RPD = 200* | (C-E) / (C+E) |	A = Parent Result	B = Spike Added
LCS/LCSD Recovery	[D] = 100 * (C) / [B]	C = MS/LCS Result	D = MSD/LCSD % Rec
Log Difference	Log Diff. = Log(Sample Duplicate) - Log(Original Sample)	E = MSD/LCSD Result	

QC Summary 595905

AMEC Foster Wheeler

Cave Creek Landfill - Maricopa

Analytical Method: VOCs by SW 8260B | Prep Method: SW5030C

Seq Number: 3061308 | Matrix: Water | Date Prep: 08.27.18

Parent Sample Id: 595905-002 | MS Sample Id: 595905-002 S | MSD Sample Id: 595905-002 SD

Parameter	Parent Result	Spike Amount	MS Result	MS %Rec	MSD Result	MSD %Rec	Limits	%RPD	RPD Limit	Units	Analysis Date	Flag
Methylene Chloride	<0.200	20.0	17.2	86	15.9	80	65-127	8	20	ug/L	08.27.18 14:27	
MTBE	<0.100	20.0	20.0	100	16.7	84	69-135	18	20	ug/L	08.27.18 14:27	
Naphthalene	<0.200	20.0	18.3	92	17.1	86	70-130	7	26	ug/L	08.27.18 14:27	
n-Butylbenzene	<0.200	20.0	19.8	99	16.5	83	70-130	18	20	ug/L	08.27.18 14:27	
n-Propylbenzene	<0.0800	20.0	20.5	103	17.6	88	70-130	15	20	ug/L	08.27.18 14:27	
o-Xylene	<0.0900	20.0	18.6	93	17.3	87	70-130	7	20	ug/L	08.27.18 14:27	
p-Cymene (p-Isopropyltoluene)	<0.100	20.0	18.0	90	17.0	85	70-130	6	20	ug/L	08.27.18 14:27	
Sec-Butylbenzene	<0.100	20.0	19.0	95	16.7	84	70-130	13	20	ug/L	08.27.18 14:27	
Styrene	<0.0800	20.0	18.9	95	17.3	87	37-156	9	37	ug/L	08.27.18 14:27	
tert-Butylbenzene	<0.200	20.0	17.2	86	18.2	91	70-130	6	20	ug/L	08.27.18 14:27	
Tetrachloroethylene	<0.0800	20.0	16.0	80	17.1	86	70-130	7	20	ug/L	08.27.18 14:27	
Toluene	<0.0700	20.0	18.3	92	21.1	106	70-130	14	20	ug/L	08.27.18 14:27	
trans-1,2-dichloroethene	<0.0900	20.0	19.6	98	15.9	80	69-131	21	20	ug/L	08.27.18 14:27	R5
Trichloroethene	2.17	20.0	20.3	91	18.7	83	70-130	8	20	ug/L	08.27.18 14:27	
Trichlorofluoromethane	<0.400	20.0	15.7	79	15.5	78	60-133	1	20	ug/L	08.27.18 14:27	
Vinyl Acetate	<0.200	20.0	19.8	99	17.6	88	32-156	12	23	ug/L	08.27.18 14:27	
Vinyl Chloride	<0.100	20.0	18.0	90	14.4	72	35-139	22	21	ug/L	08.27.18 14:27	R5
trans-1,3-dichloropropene	<0.0600	20.0	17.4	87	16.1	81	70-130	8	20	ug/L	08.27.18 14:27	
1,1,2-Trichloro-1,2,2-Trifluoroethane	<0.300	20.0	15.5	78	15.4	77	51-131	1	20	ug/L	08.27.18 14:27	
1,3-Butadiene	<0.276	20.0	20.3	102	15.3	77	37-152	28	20	ug/L	08.27.18 14:27	R5
Cyclohexane	<0.115	20.0	18.4	92	16.0	80	64-138	14	20	ug/L	08.27.18 14:27	
Dicyclopentadiene	<0.0540	20.0	20.9	105	16.3	82	13-182	25	20	ug/L	08.27.18 14:27	R5
Methylcyclohexane	<0.117	20.0	19.1	96	17.5	88	70-130	9	20	ug/L	08.27.18 14:27	
n-Hexane	<0.0920	20.0	20.2	101	16.1	81	62-128	23	20	ug/L	08.27.18 14:27	R5

Surrogate	MS %Rec	MS Flag	MSD %Rec	MSD Flag	Limits	Units	Analysis Date
4-Bromofluorobenzene	85		80		74-124	%	08.27.18 14:27
Dibromofluoromethane	86		81		75-131	%	08.27.18 14:27
1,2-Dichloroethane-D4	78		80		63-144	%	08.27.18 14:27
Toluene-D8	88		94		80-117	%	08.27.18 14:27

MS/MSD Percent Recovery	[D] = 100*(C-A) / B	LCS = Laboratory Control Sample	MS = Matrix Spike
Relative Percent Difference	RPD = 200* | (C-E) / (C+E) |	A = Parent Result	B = Spike Added
LCS/LCSD Recovery	[D] = 100 * (C) / [B]	C = MS/LCS Result	D = MSD/LCSD % Rec
Log Difference	Log Diff. = Log(Sample Duplicate) - Log(Original Sample)	E = MSD/LCSD Result	

1.000

QC Summary 595905

AMEC Foster Wheeler

Cave Creek Landfill - Maricopa

Analytical Method:	**VOCs by SW 8260B**			Prep Method:	SW5030C
Seq Number:	3061683	Matrix:	Water	Date Prep:	08.29.18
Parent Sample Id:	595904-006	MS Sample Id:	595904-006 S	MSD Sample Id:	595904-006 SD

Parameter	Parent Result	Spike Amount	MS Result	MS %Rec	MSD Result	MSD %Rec	Limits	%RPD	RPD Limit	Units	Analysis Date	Flag
m,p-Xylenes	<0.0900	40.0	46.7	117	35.0	88	70-130	29	20	ug/L	08.30.18 02:24	R5
o-Xylene	<0.0900	20.0	25.3	127	17.6	88	70-130	36	20	ug/L	08.30.18 02:24	R5
Trichloroethene	0.790	20.0	21.9	106	18.1	87	70-130	19	20	ug/L	08.30.18 02:24	

Surrogate	MS %Rec	MS Flag	MSD %Rec	MSD Flag	Limits	Units	Analysis Date
4-Bromofluorobenzene	95		85		74-124	%	08.30.18 02:24
Dibromofluoromethane	102		89		75-131	%	08.30.18 02:24
1,2-Dichloroethane-D4	106		92		63-144	%	08.30.18 02:24
Toluene-D8	103		92		80-117	%	08.30.18 02:24

MS/MSD Percent Recovery	[D] = 100*(C-A) / B	LCS = Laboratory Control Sample	MS = Matrix Spike
Relative Percent Difference	RPD = 200* | (C-E) / (C+E) |	A = Parent Result	B = Spike Added
LCS/LCSD Recovery	[D] = 100 * (C) / [B]	C = MS/LCS Result	D = MSD/LCSD % Rec
Log Difference	Log Diff. = Log(Sample Duplicate) - Log(Original Sample)	E = MSD/LCSD Result	

1.000

QC Summary 595905

AMEC Foster Wheeler

Cave Creek Landfill - Maricopa

Analytical Method: VOCs by SW 8260B Prep Method: SW5030B

Seq Number: 3061633 Matrix: Water Date Prep: 08.29.18

Parent Sample Id: 596899-016 MS Sample Id: 596899-016 S

Parameter	Parent Result	Spike Amount	MS Result	MS %Rec	Limits	Units	Analysis Date	Flag
1,1,1,2-Tetrachloroethane	<0.195	50.0	44.8	90	75-114	ug/L	08.29.18 09:15	
1,1,1-Trichloroethane	<0.130	50.0	47.3	95	75-118	ug/L	08.29.18 09:15	
1,1,2,2-Tetrachloroethane	<0.365	50.0	44.1	88	75-113	ug/L	08.29.18 09:15	
1,1,2-Trichloroethane	<0.272	50.0	45.1	90	75-114	ug/L	08.29.18 09:15	
1,1-Dichloroethane	<0.182	50.0	43.8	88	71-121	ug/L	08.29.18 09:15	
1,1-Dichloroethene	0.680	50.0	45.2	89	74-124	ug/L	08.29.18 09:15	
1,1-Dichloropropene	<0.257	50.0	44.8	90	77-116	ug/L	08.29.18 09:15	
1,2,3-Trichlorobenzene	<2.00	50.0	51.5	103	70-140	ug/L	08.29.18 09:15	
1,2,3-Trichloropropane	<0.214	50.0	43.5	87	73-115	ug/L	08.29.18 09:15	
1,2,4-Trichlorobenzene	<2.00	50.0	47.0	94	71-135	ug/L	08.29.18 09:15	
1,2,4-Trimethylbenzene	<0.113	50.0	45.4	91	74-118	ug/L	08.29.18 09:15	
1,2-Dibromo-3-Chloropropane	<0.707	50.0	42.7	85	70-124	ug/L	08.29.18 09:15	
1,2-Dibromoethane	<0.380	50.0	45.3	91	75-117	ug/L	08.29.18 09:15	
1,2-Dichlorobenzene	<0.175	50.0	44.1	88	77-115	ug/L	08.29.18 09:15	
1,2-Dichloroethane	<0.283	50.0	44.6	89	72-111	ug/L	08.29.18 09:15	
1,2-Dichloropropane	<0.170	50.0	45.6	91	75-113	ug/L	08.29.18 09:15	
1,3,5-Trimethylbenzene	<0.178	50.0	45.6	91	77-119	ug/L	08.29.18 09:15	
1,3-Dichlorobenzene	<0.169	50.0	44.6	89	79-112	ug/L	08.29.18 09:15	
1,3-Dichloropropane	<0.199	50.0	44.0	88	74-113	ug/L	08.29.18 09:15	
1,4-Dichlorobenzene	<0.222	50.0	43.1	86	76-112	ug/L	08.29.18 09:15	
2,2-Dichloropropane	<0.154	50.0	49.3	99	58-131	ug/L	08.29.18 09:15	
2-Butanone	<1.32	250	202	81	59-114	ug/L	08.29.18 09:15	
2-Chlorotoluene	<0.293	50.0	42.2	84	79-113	ug/L	08.29.18 09:15	
2-Hexanone	<1.05	250	238	95	66-129	ug/L	08.29.18 09:15	
4-Chlorotoluene	<0.114	50.0	45.7	91	76-114	ug/L	08.29.18 09:15	
4-Methyl-2-Pentanone	<0.874	250	227	91	73-126	ug/L	08.29.18 09:15	
Acetone	<20.0	250	221	88	33-121	ug/L	08.29.18 09:15	
Benzene	<0.185	50.0	44.4	89	76-110	ug/L	08.29.18 09:15	
Bromobenzene	<0.258	50.0	43.6	87	77-114	ug/L	08.29.18 09:15	
Bromochloromethane	<0.328	50.0	43.9	88	72-112	ug/L	08.29.18 09:15	
Bromodichloromethane	<0.164	50.0	45.9	92	75-116	ug/L	08.29.18 09:15	
Bromoform	<0.348	50.0	47.5	95	66-119	ug/L	08.29.18 09:15	
Bromomethane	<0.127	50.0	55.6	111	60-110	ug/L	08.29.18 09:15	M1
Carbon Disulfide	<0.173	50.0	45.3	91	71-128	ug/L	08.29.18 09:15	
Carbon Tetrachloride	<0.243	50.0	46.2	92	77-119	ug/L	08.29.18 09:15	
Chlorobenzene	<0.110	50.0	44.6	89	78-110	ug/L	08.29.18 09:15	
Chloroethane	<0.190	50.0	63.4	127	62-113	ug/L	08.29.18 09:15	M1
Chloroform	<0.107	50.0	44.7	89	79-111	ug/L	08.29.18 09:15	
Chloromethane	<5.00	50.0	42.6	85	64-115	ug/L	08.29.18 09:15	
cis-1,2-Dichloroethene	<0.162	50.0	44.5	89	72-121	ug/L	08.29.18 09:15	
cis-1,3-Dichloropropene	<0.126	50.0	47.5	95	75-119	ug/L	08.29.18 09:15	
Dibromochloromethane	<0.212	50.0	45.8	92	74-117	ug/L	08.29.18 09:15	
Dibromomethane	<0.186	50.0	42.7	85	72-114	ug/L	08.29.18 09:15	
Dichlorodifluoromethane	<0.148	50.0	53.0	106	64-138	ug/L	08.29.18 09:15	
Ethylbenzene	<0.190	50.0	45.3	91	80-116	ug/L	08.29.18 09:15	
Hexachlorobutadiene	<2.00	50.0	56.3	113	79-123	ug/L	08.29.18 09:15	
Iodomethane (Methyl Iodide)	<0.170	50.0	45.9	92	74-108	ug/L	08.29.18 09:15	
isopropylbenzene	<0.218	50.0	45.7	91	79-117	ug/L	08.29.18 09:15	
m,p-Xylenes	<1.00	100	89.9	90	79-118	ug/L	08.29.18 09:15	

MS/MSD Percent Recovery	[D] = 100*(C-A) / B	LCS = Laboratory Control Sample	MS = Matrix Spike
Relative Percent Difference	RPD = 200* | (C-E) / (C+E) |	A = Parent Result	B = Spike Added
LCS/LCSD Recovery	[D] = 100 * (C) / [B]	C = MS/LCS Result	D = MSD/LCSD % Rec
Log Difference	Log Diff. = Log(Sample Duplicate) - Log(Original Sample)	E = MSD/LCSD Result	

QC Summary 595905

AMEC Foster Wheeler

Cave Creek Landfill - Maricopa

Analytical Method: VOCs by SW 8260B Prep Method: SW5030B

Seq Number: 3061633 Matrix: Water Date Prep: 08.29.18

Parent Sample Id: 596899-016 MS Sample Id: 596899-016 S

Parameter	Parent Result	Spike Amount	MS Result	MS %Rec	Limits	Units	Analysis Date	Flag
Methylene Chloride	<2.00	50.0	48.7	97	67-116	ug/L	08.29.18 09:15	
MTBE	<0.500	50.0	45.6	91	70-125	ug/L	08.29.18 09:15	
Naphthalene	<2.00	50.0	52.4	105	72-157	ug/L	08.29.18 09:15	
n-Butylbenzene	<2.00	50.0	48.2	96	74-128	ug/L	08.29.18 09:15	
n-Propylbenzene	<0.173	50.0	45.5	91	75-121	ug/L	08.29.18 09:15	
o-Xylene	<0.500	50.0	46.0	92	78-122	ug/L	08.29.18 09:15	
p-Cymene (p-Isopropyltoluene)	<0.150	50.0	48.1	96	71-123	ug/L	08.29.18 09:15	
Sec-Butylbenzene	<0.124	50.0	46.8	94	76-126	ug/L	08.29.18 09:15	
Styrene	<0.197	50.0	45.3	91	74-124	ug/L	08.29.18 09:15	
tert-Butylbenzene	<0.177	50.0	46.4	93	77-124	ug/L	08.29.18 09:15	
Tetrachloroethylene	<0.347	50.0	44.1	88	78-117	ug/L	08.29.18 09:15	
Toluene	<0.500	50.0	44.0	88	77-112	ug/L	08.29.18 09:15	
trans-1,2-dichloroethene	<0.167	50.0	43.4	87	72-117	ug/L	08.29.18 09:15	
Trichloroethene	<0.218	50.0	44.4	89	70-123	ug/L	08.29.18 09:15	
Trichlorofluoromethane	<0.191	50.0	50.3	101	69-118	ug/L	08.29.18 09:15	
Vinyl Acetate	<0.583	250	220	88	68-114	ug/L	08.29.18 09:15	
Vinyl Chloride	<0.232	50.0	50.8	102	65-114	ug/L	08.29.18 09:15	
trans-1,3-dichloropropene	<0.198	50.0	46.5	93	75-123	ug/L	08.29.18 09:15	
1,1,2-Trichloro-1,2,2-Trifluoroethane	<0.175	50.0	50.6	101	75-125	ug/L	08.29.18 09:15	
1,3-Butadiene	<2.52	50.0	47.8	96	77-104	ug/L	08.29.18 09:15	
Cyclohexane	<0.309	50.0	48.2	96	74-123	ug/L	08.29.18 09:15	
Dicyclopentadiene	<5.00	50.0	44.8	90	73-108	ug/L	08.29.18 09:15	
Methylcyclohexane	<0.228	50.0	49.9	100	76-125	ug/L	08.29.18 09:15	
n-Hexane	<5.00	50.0	51.7	103	66-132	ug/L	08.29.18 09:15	

Surrogate	MS %Rec	MS Flag	Limits	Units	Analysis Date
Dibromofluoromethane	102		75-131	%	08.29.18 09:15
1,2-Dichloroethane-D4	97		63-144	%	08.29.18 09:15
Toluene-D8	100		80-117	%	08.29.18 09:15
4-Bromofluorobenzene	102		74-124	%	08.29.18 09:15

MS/MSD Percent Recovery	[D] = 100*(C-A) / B	LCS = Laboratory Control Sample	MS = Matrix Spike
Relative Percent Difference	RPD = 200* | (C-E) / (C+E) |	A = Parent Result	B = Spike Added
LCS/LCSD Recovery	[D] = 100 * (C) / [B]	C = MS/LCS Result	D = MSD/LCSD % Rec
Log Difference	Log Diff. = Log(Sample Duplicate) - Log(Original Sample)	E = MSD/LCSD Result	

QC Summary 595905

AMEC Foster Wheeler

Cave Creek Landfill - Maricopa

Analytical Method: **Total Metals by SW 6010C** Prep Method: SW3010A
Seq Number: 3061039 Matrix: Water Date Prep: 08.23.18
MB Sample Id: 7660972-1-BLK LCS Sample Id: 7660972-1-BKS LCSD Sample Id: 7660972-1-BSD

Parameter	MB Result	Spike Amount	LCS Result	LCS %Rec	LCSD Result	LCSD %Rec	Limits	%RPD	RPD Limit	Units	Analysis Date	Flag
Antimony	<0.00589	1.00	0.957	96	0.952	95	75-125	1	20	mg/L	08.23.18 15:17	
Arsenic	<0.00550	1.00	0.997	100	1.01	101	75-125	1	20	mg/L	08.23.18 15:17	
Barium	<0.00135	1.00	0.981	98	0.986	99	75-125	1	20	mg/L	08.23.18 15:17	
Cadmium	<0.00243	1.00	1.03	103	1.04	104	75-125	1	20	mg/L	08.23.18 15:17	
Chromium	<0.000811	1.00	1.06	106	1.07	107	75-125	1	20	mg/L	08.23.18 15:17	
Cobalt	<0.000673	1.00	0.998	100	1.01	101	75-125	1	20	mg/L	08.23.18 15:17	
Copper	<0.00544	1.00	1.04	104	1.04	104	75-125	0	20	mg/L	08.23.18 15:17	
Lead	<0.00237	1.00	1.04	104	1.05	105	75-125	1	20	mg/L	08.23.18 15:17	
Nickel	<0.00307	1.00	1.02	102	1.03	103	75-125	1	20	mg/L	08.23.18 15:17	
Selenium	<0.00439	1.00	1.01	101	1.01	101	75-125	0	20	mg/L	08.23.18 15:17	
Silver	<0.00559	0.500	0.474	95	0.476	95	75-125	0	20	mg/L	08.23.18 15:17	
Thallium	<0.00621	1.00	1.06	106	1.07	107	75-125	1	20	mg/L	08.23.18 15:17	
Titanium	<0.00156	1.00	0.951	95	0.959	96	75-125	1	20	mg/L	08.23.18 15:17	
Vanadium	<0.00518	1.00	1.02	102	1.03	103	75-125	1	20	mg/L	08.23.18 15:17	
Zinc	<0.00391	1.00	1.03	103	1.03	103	75-125	0	20	mg/L	08.23.18 15:17	

Analytical Method: **Total Metals by SW 6010C** Prep Method: SW3010A
Seq Number: 3061039 Matrix: Soil Date Prep: 08.23.18
Parent Sample Id: 596424-001 MS Sample Id: 596424-001 S MSD Sample Id: 596424-001 SD

Parameter	Parent Result	Spike Amount	MS Result	MS %Rec	MSD Result	MSD %Rec	Limits	%RPD	RPD Limit	Units	Analysis Date	Flag
Antimony	<0.0294	5.00	4.42	88	4.48	90	75-125	1	20	mg/L	08.23.18 15:29	
Arsenic	<0.0275	5.00	4.96	99	4.90	98	75-125	1	20	mg/L	08.23.18 15:29	
Barium	1.18	5.00	5.98	96	6.03	97	75-125	1	20	mg/L	08.23.18 15:29	
Cadmium	<0.0122	5.00	5.22	104	5.24	105	75-125	0	20	mg/L	08.23.18 15:29	
Chromium	<0.00405	5.00	5.10	102	5.19	104	75-125	2	20	mg/L	08.23.18 15:29	
Cobalt	0.0239	5.00	4.91	98	4.95	99	75-125	1	20	mg/L	08.23.18 15:29	
Copper	0.0424	5.00	5.18	103	5.24	104	75-125	1	20	mg/L	08.23.18 15:29	
Lead	<0.0118	5.00	5.08	102	5.12	102	75-125	1	20	mg/L	08.23.18 15:29	
Nickel	0.163	5.00	5.16	100	5.15	100	75-125	0	20	mg/L	08.23.18 15:29	
Selenium	<0.0219	5.00	5.12	102	5.29	106	75-125	3	20	mg/L	08.23.18 15:29	
Silver	<0.0279	2.50	2.41	96	2.43	97	75-125	1	20	mg/L	08.23.18 15:29	
Thallium	<0.0311	5.00	4.99	100	5.01	100	75-125	0	20	mg/L	08.23.18 15:29	
Titanium	<0.00779	5.00	4.77	95	4.82	96	75-125	1	20	mg/L	08.23.18 15:29	
Vanadium	<0.0259	5.00	5.11	102	5.15	103	75-125	1	20	mg/L	08.23.18 15:29	
Zinc	0.349	5.00	5.49	103	5.52	103	75-125	1	20	mg/L	08.23.18 15:29	

Analytical Method: **Alkalinity by SM 2320B**
Seq Number: 3060957 Matrix: Water
MB Sample Id: 3060957-1-BLK LCS Sample Id: 3060957-1-BKS LCSD Sample Id: 3060957-1-BSD

Parameter	MB Result	Spike Amount	LCS Result	LCS %Rec	LCSD Result	LCSD %Rec	Limits	%RPD	RPD Limit	Units	Analysis Date	Flag
Alkalinity, Total (CaCO3)	4.00	167	164	98	165	99	90-110	1	20	mg/L	08.22.18 15:00	

MS/MSD Percent Recovery [D] = 100*(C-A) / B
Relative Percent Difference RPD = 200* | (C-E) / (C+E) |
LCS/LCSD Recovery [D] = 100 * (C) / [B]
Log Difference Log Diff. = Log(Sample Duplicate) - Log(Original Sample)

LCS = Laboratory Control Sample
A = Parent Result
C = MS/LCS Result
E = MSD/LCSD Result

MS = Matrix Spike
B = Spike Added
D = MSD/LCSD % Rec

QC Summary 595905

AMEC Foster Wheeler

Cave Creek Landfill - Maricopa

Analytical Method: **Alkalinity by SM 2320B**
Seq Number: 3060957 Matrix: Water
Parent Sample Id: 595905-009 MD Sample Id: 595905-009 D

Parameter	Parent Result	MD Result	%RPD	RPD Limit	Units	Analysis Date	Flag
Alkalinity, Total (CaCO3)	130	132	2	20	mg/L	08.22.18 15:00	
Alkalinity, Bicarbonate (as CaCO3)	130	132	2	20	mg/L	08.22.18 15:00	
Alkalinity, Carbonate (as CaCO3)	<4.00	<4.00	0	20	mg/L	08.22.18 15:00	
Alkalinity, Hydroxide (as CaCO3)	<4.00	<4.00	0	20	mg/L	08.22.18 15:00	

Analytical Method: **Alkalinity by SM 2320B**
Seq Number: 3060957 Matrix: Water
Parent Sample Id: 596670-001 MD Sample Id: 596670-001 D

Parameter	Parent Result	MD Result	%RPD	RPD Limit	Units	Analysis Date	Flag
Alkalinity, Total (CaCO3)	261	260	0	20	mg/L	08.22.18 15:00	
Alkalinity, Bicarbonate (as CaCO3)	233	231	1	20	mg/L	08.22.18 15:00	
Alkalinity, Carbonate (as CaCO3)	28.0	28.8	3	20	mg/L	08.22.18 15:00	
Alkalinity, Hydroxide (as CaCO3)	<4.00	<4.00	0	20	mg/L	08.22.18 15:00	

Analytical Method: **Specific Conductance by SM 2510B**
Seq Number: 3060443 Matrix: Water
MB Sample Id: 3060443-1-BLK LCS Sample Id: 3060443-1-BKS LCSD Sample Id: 3060443-1-BSD

Parameter	MB Result	Spike Amount	LCS Result	LCS %Rec	LCSD Result	LCSD %Rec	Limits	%RPD	RPD Limit	Units	Analysis Date	Flag
Conductivity	<1.00	1410	1400	99	1410	100	80-120	1	20	uS/cm	08.17.18 14:30	

Analytical Method: **Specific Conductance by SM 2510B**
Seq Number: 3060443 Matrix: Water
Parent Sample Id: 595905-009 MD Sample Id: 595905-009 D

Parameter	Parent Result	MD Result	%RPD	RPD Limit	Units	Analysis Date	Flag
Conductivity	305	306	0	20	uS/cm	08.17.18 14:30	

Analytical Method: **TDS by SM 2540C**
Seq Number: 3060722 Matrix: Water
MB Sample Id: 3060722-1-BLK LCS Sample Id: 3060722-1-BKS LCSD Sample Id: 3060722-1-BSD

Parameter	MB Result	Spike Amount	LCS Result	LCS %Rec	LCSD Result	LCSD %Rec	Limits	%RPD	RPD Limit	Units	Analysis Date	Flag
Total Dissolved Solids	<10.0	1000	1080	108	1010	101	80-120	7	10	mg/L	08.17.18 10:00	

MS/MSD Percent Recovery	[D] = 100*(C-A) / B	LCS = Laboratory Control Sample	MS = Matrix Spike
Relative Percent Difference	RPD = 200* | (C-E) / (C+E) |	A = Parent Result	B = Spike Added
LCS/LCSD Recovery	[D] = 100 * (C) / [B]	C = MS/LCS Result	D = MSD/LCSD % Rec
Log Difference	Log Diff. = Log(Sample Duplicate) - Log(Original Sample)	E = MSD/LCSD Result	

QC Summary 595905

AMEC Foster Wheeler

Cave Creek Landfill - Maricopa

Analytical Method: **TDS by SM 2540C**
Seq Number: 3060722 Matrix: Water
Parent Sample Id: 595523-001 MD Sample Id: 595523-001 D

Parameter	Parent Result	MD Result	%RPD	RPD Limit	Units	Analysis Date	Flag
Total Dissolved Solids	550	548	0	10	mg/L	08.17.18 10:00	

Analytical Method: **TDS by SM 2540C**
Seq Number: 3060722 Matrix: Water
Parent Sample Id: 595905-001 MD Sample Id: 595905-001 D

Parameter	Parent Result	MD Result	%RPD	RPD Limit	Units	Analysis Date	Flag
Total Dissolved Solids	412	424	3	10	mg/L	08.17.18 10:00	

Analytical Method: **pH by SM 4500-H**
Seq Number: 3060445 Matrix: Water
Parent Sample Id: 595905-009 MD Sample Id: 595905-009 D

Parameter	Parent Result	MD Result	%RPD	RPD Limit	Units	Analysis Date	Flag
pH	8.84	8.88	0	20	SU	08.17.18 11:15	
Temperature	23.2	23.2	0	20	Deg C	08.17.18 11:15	

Analytical Method: **pH by SM 4500-H**
Seq Number: 3060445 Matrix: Water
Parent Sample Id: 596105-001 MD Sample Id: 596105-001 D

Parameter	Parent Result	MD Result	%RPD	RPD Limit	Units	Analysis Date	Flag
pH	7.85	7.83	0	20	SU	08.17.18 11:15	
Temperature	23.3	23.4	0	20	Deg C	08.17.18 11:15	

Analytical Method: **Inorganic Anions by EPA 300** Prep Method: E300P
Seq Number: 3061196 Matrix: Water Date Prep: 08.24.18
MB Sample Id: 7661090-1-BLK LCS Sample Id: 7661090-1-BKS LCSD Sample Id: 7661090-1-BSD

Parameter	MB Result	Spike Amount	LCS Result	LCS %Rec	LCSD Result	LCSD %Rec	Limits	%RPD	RPD Limit	Units	Analysis Date	Flag
Chloride	<0.0280	10.0	9.76	98	9.71	97	90-110	1	20	mg/L	08.24.18 18:40	
Fluoride	<0.0360	10.0	10.1	101	10.0	100	90-110	1	20	mg/L	08.24.18 18:40	
Sulfate	<0.0460	10.0	9.78	98	9.75	98	90-110	0	20	mg/L	08.24.18 18:40	

MS/MSD Percent Recovery	[D] = 100*(C-A) / B	LCS = Laboratory Control Sample	MS = Matrix Spike
Relative Percent Difference	RPD = 200* | (C-E) / (C+E) |	A = Parent Result	B = Spike Added
LCS/LCSD Recovery	[D] = 100 * (C) / [B]	C = MS/LCS Result	D = MSD/LCSD % Rec
Log Difference	Log Diff. = Log(Sample Duplicate) - Log(Original Sample)	E = MSD/LCSD Result	

QC Summary 595905

AMEC Foster Wheeler

Cave Creek Landfill - Maricopa

Analytical Method: **Inorganic Anions by EPA 300** Prep Method: E300P
Seq Number: 3061196 Matrix: Water Date Prep: 08.24.18
Parent Sample Id: 595905-009 MS Sample Id: 595905-009 S MSD Sample Id: 595905-009 SD

Parameter	Parent Result	Spike Amount	MS Result	MS %Rec	MSD Result	MSD %Rec	Limits	%RPD	RPD Limit	Units	Analysis Date	Flag
Chloride	21.2	200	229	104	230	104	90-110	0	20	mg/L	08.25.18 00:10	
Fluoride	0.0418	200	212	106	214	107	90-110	1	20	mg/L	08.25.18 00:10	
Sulfate	0.769	200	199	99	202	101	90-110	1	20	mg/L	08.25.18 00:10	

Analytical Method: **Inorganic Anions by EPA 300** Prep Method: E300P
Seq Number: 3061196 Matrix: Ground Water Date Prep: 08.24.18
Parent Sample Id: 596905-001 MS Sample Id: 596905-001 S MSD Sample Id: 596905-001 SD

Parameter	Parent Result	Spike Amount	MS Result	MS %Rec	MSD Result	MSD %Rec	Limits	%RPD	RPD Limit	Units	Analysis Date	Flag
Chloride	97.3	200	295	99	295	99	90-110	0	20	mg/L	08.24.18 19:14	
Fluoride	1.14	200	212	105	213	106	90-110	0	20	mg/L	08.24.18 19:14	
Sulfate	390	200	595	103	596	103	90-110	0	20	mg/L	08.24.18 19:14	

Analytical Method: **Nitrite by SM 4500-NO2B**
Seq Number: 3060350 Matrix: Water
MB Sample Id: 3060350-1-BLK LCS Sample Id: 3060350-1-BKS LCSD Sample Id: 3060350-1-BSD

Parameter	MB Result	Spike Amount	LCS Result	LCS %Rec	LCSD Result	LCSD %Rec	Limits	%RPD	RPD Limit	Units	Analysis Date	Flag
Nitrite as N	<0.0100	0.100	0.105	105	0.107	107	85-115	2	20	mg/L	08.16.18 14:46	

Analytical Method: **Nitrite by SM 4500-NO2B**
Seq Number: 3060350 Matrix: Water
Parent Sample Id: 595905-009 MS Sample Id: 595905-009 S MSD Sample Id: 595905-009 SD

Parameter	Parent Result	Spike Amount	MS Result	MS %Rec	MSD Result	MSD %Rec	Limits	%RPD	RPD Limit	Units	Analysis Date	Flag
Nitrite as N	0.0108	0.100	0.108	97	0.109	98	79-117	1	20	mg/L	08.16.18 14:46	

Analytical Method: **Nitrite by SM 4500-NO2B**
Seq Number: 3060350 Matrix: Water
Parent Sample Id: 595996-003 MS Sample Id: 595996-003 S MSD Sample Id: 595996-003 SD

Parameter	Parent Result	Spike Amount	MS Result	MS %Rec	MSD Result	MSD %Rec	Limits	%RPD	RPD Limit	Units	Analysis Date	Flag
Nitrite as N	0.0148	0.100	0.107	92	0.109	94	79-117	2	20	mg/L	08.16.18 14:46	

MS/MSD Percent Recovery	[D] = 100*(C-A) / B	LCS = Laboratory Control Sample	MS = Matrix Spike
Relative Percent Difference	RPD = 200* | (C-E) / (C+E) |	A = Parent Result	B = Spike Added
LCS/LCSD Recovery	[D] = 100 * (C) / [B]	C = MS/LCS Result	D = MSD/LCSD % Rec
Log Difference	Log Diff. = Log(Sample Duplicate) - Log(Original Sample)	E = MSD/LCSD Result	

QC Summary 595905

AMEC Foster Wheeler

Cave Creek Landfill - Maricopa

Analytical Method: **Nitrogen, Nitrate-Nitrite by EPA 353.2** Prep Method: E353.2P
Seq Number: 3060750 Matrix: Water Date Prep: 08.21.18
MB Sample Id: 7660839-1-BLK LCS Sample Id: 7660839-1-BKS LCSD Sample Id: 7660839-1-BSD

Parameter	MB Result	Spike Amount	LCS Result	LCS %Rec	LCSD Result	LCSD %Rec	Limits	%RPD	RPD Limit	Units	Analysis Date	Flag
Nitrogen, Nitrate-Nitrite	<0.0283	1.00	1.03	103	1.05	105	90-110	2	20	mg/L	08.21.18 12:05	

Analytical Method: **Nitrogen, Nitrate-Nitrite by EPA 353.2** Prep Method: E353.2P
Seq Number: 3060750 Matrix: Waste Water Date Prep: 08.21.18
Parent Sample Id: 595991-001 MS Sample Id: 595991-001 S MSD Sample Id: 595991-001 SD

Parameter	Parent Result	Spike Amount	MS Result	MS %Rec	MSD Result	MSD %Rec	Limits	%RPD	RPD Limit	Units	Analysis Date	Flag
Nitrogen, Nitrate-Nitrite	3.05	1.00	4.09	104	4.04	99	90-110	1	20	mg/L	08.21.18 12:13	

Analytical Method: **Nitrogen, Nitrate-Nitrite by EPA 353.2** Prep Method: E353.2P
Seq Number: 3060750 Matrix: Water Date Prep: 08.21.18
Parent Sample Id: 595996-001 MS Sample Id: 595996-001 S MSD Sample Id: 595996-001 SD

Parameter	Parent Result	Spike Amount	MS Result	MS %Rec	MSD Result	MSD %Rec	Limits	%RPD	RPD Limit	Units	Analysis Date	Flag
Nitrogen, Nitrate-Nitrite	6.23	1.00	7.17	94	7.13	90	90-110	1	20	mg/L	08.21.18 12:35	

MS/MSD Percent Recovery [D] = 100*(C-A) / B
Relative Percent Difference RPD = 200* | (C-E) / (C+E) |
LCS/LCSD Recovery [D] = 100 * (C) / [B]
Log Difference Log Diff. = Log(Sample Duplicate) - Log(Original Sample)

LCS = Laboratory Control Sample
A = Parent Result
C = MS/LCS Result
E = MSD/LCSD Result

MS = Matrix Spike
B = Spike Added
D = MSD/LCSD % Rec

1.000

CHAIN OF CUSTODY

Page 1 Of 1

595905

XENCO LABORATORIES

Setting the Standard since 1990

Stafford,Texas (281-240-4200) | San Antonio, Texas (210-509-3334) | Phoenix, Arizona (480-355-0900)

Dallas Texas (214-902-0300) | Midland, Texas (432-704-5251)

www.xenco.com

Xenco Quote #080717RK-AMECFW | Xenco Job #

Client / Reporting Information

Company Name / Branch: Maricopa County WR&R

Company Address: 2910 W Durango St Phoenix AZ 85009

Email: SAMANTHA.SARGENT@WOODPLC.COM, EMILY.LODOLCE@WOODPLC.COM

Phone No: 602.733.6030, 602.733.6081

Project Contact: Emily LoDolce - (602) 733-6081

Sampler's Name: Samantha Sargent

Project Information

Project Name/Number: Cave Creek Landfill 14-2017-2034.****.021

Project Location: Phoenix, AZ

Invoice To: attn: Kathryn Snyder, Maricopa County WR&R, 2910 W Durango St Phoenix, AZ 85009

PO Number:

Matrix Codes

W = Water
S = Soil/Sed/Solid
GW =Ground Water
DW = Drinking Water
P = Product
SW = Surface water
SL = Sludge
OW =Ocean/Sea Water
WI = Wipe
O = Oil
WW= Waste Water
A = Air

No.	Field ID / Point of Collection	Sample Depth	Date	Time	Matrix	# of bottles	HCl	NaOH/Zn Acetate	HNO3	H2SO4	NaOH	NaHSO4	MEOH	NONE	8260B VOCs	6020 Metals (See List)	300.0 General Chemistry (See List)	3000. Nitrate/Nitrite	SM2320B Alkalinity	SM2450C (TDS), SM2510B (Specific Conductivity), SM4500 (pH)					Field Comments
1	MW02-714-081518	714	8/15/18	0900	W	7	x		x	x					X	X	X	X	X	X					
2	MW03-724-081318	724	8/13/18	1230	W	7	x		x	x					X	X	X	X	X	X					
3	MW04-~~709~~-708-081318	~~709~~ 708	8/13/18	0900	W	7	x		x	x					X	X	X	X	X	X					
4	MW05-704-081418	704	8/14/18	1045	W	7	x		x	x					X	X	X	X	X	X					
5	MW06-720-081318	720	8/13/18	1100	W	7	x		x	x					X	X	X	X	X	X					
6	MW07-718-081318	718	8/13/18	1000	W	7	x		x	x					X	X	X	X	X	X					
7	MW08-742-081418	742	8/14/18	1300	W	7	x		x	x					X	X	X	X	X	X					
8	PW-734-081518	734	8/15/18	1430	W	7	x		x	x					X	X	X	X	X	X					
9	DUP01-081418	—	8/14/18	1430	W	7	x		x	x					X	X	X	X	X	X					
10	DUP02-081518	—	8/15/18	1110																					No Sample received

Turnaround Time (Business days)

- [ ] Same Day TAT
- [ ] 5 Day TAT
- [ ] Next Day EMERGENCY
- [x] 7 Day TAT
- [ ] 2 Day EMERGENCY
- [ ] Contract TAT
- [ ] 3 Day EMERGENCY

TAT Starts Day received by Lab, if received by 5:00 pm

Data Deliverable Information

- [ ] Level II Std QC
- [ ] Level IV (Full Data Pkg /raw data)
- [ ] Level III Std QC+ Forms
- [ ] TRRP Level IV
- [ ] Level 3 (CLP Forms)
- [ ] UST / RG -411
- [ ] TRRP Checklist

Notes:

FED-EX / UPS: Tracking #

SAMPLE CUSTODY MUST BE DOCUMENTED BELOW EACH TIME SAMPLES CHANGE POSSESSION, INCLUDING COURIER DELIVERY

Relinquished by Sampler:	Date Time:	Received By:	Relinquished By:	Date Time:	Received By:
1	8/15/18 15:30	1 E. Mlh	2 E. Mlh	8.15.18 1725	2
Relinquished by: 3	Date Time:	Received By: 3	Relinquished By: 4	Date Time:	Received By: 4
Relinquished by: 5	Date Time:	Received By: 5	Custody Seal #	Preserved where applicable	On Ice: X; Cooler Temp. 2.0°; Thermo. Corr. Factor N/A

Notice: Notice: Signature of this document and relinquishment of samples constitutes a valid purchase order from client company to Xenco, its affiliates and subcontractors. It assigns standard terms and conditions of service. Xenco will be liable only for the cost of samples and shall not assume any responsibility for any losses or expenses incurred by the Client if such loses are due to circumstances beyond the control of Xenco. A minimum charge of $75 will be applied to each project. Xenco's liability will be limited to the cost of samples. Any samples received by Xenco but not analyzed will be invoiced at $5 per sample. These terms will be enforced unless previously negotiated under a fully executed client contract.

1.000

XENCO LABORATORIES

Sample Receipt Checklist

Client Name: Amec FW

Date and Time Received: 8.15.18 @ 17:25

Work Order Number: 595905

Checked by: SH

Checklist completed by: [illegible]

Logged In by: [illegible] Date: 8.16.18

Matrix: W Courier Name: Client TWA

Shipping container/cooler in good condition?	Yes ☒	No ☐	Not Present ☐
Custody seals intact on shipping container/cooler?	Yes ☐	No ☐	Not Present ☒
Custody seals intact on sample bottles?	Yes ☐	No ☐	Not Present ☒
Chain of custody signed when relinquished and received?	Yes ☐	No ☐	Not Present ☐
Chain of custody agrees with sample labels?	Yes ☐	No ☐	
Samples in proper container/bottle?	Yes ☐	No ☐	
Sample containers intact?	Yes ☐	No ☐	
Sufficient sample volume for indicated test?	Yes ☐	No ☐	
All samples received within holding time?	Yes ☐	No ☐	
All samples received same day of collection?	Yes ☐	No ☒	Temp: 2.0 Wet Ice Present ☒
Where was the temperature reading taken at?	Sample ☐	Temp Blank ☒	Other:
VOA Water – VOA vials have zero headspace?	Yes ☒	No ☐	N/A ☐
Water – Microbiological bottles have ≤ 2.5 cm headspace?	Yes ☐	No ☐	N/A ☒
Water – All sample pH's acceptable upon receipt?	Yes ☒	No ☐	N/A ☐ Checked by: SH

If No, list all samples and bottle types that are not acceptable in Additional Comments section. Also state any correction actions.

Dissolved Metals – Field Filtered?	Yes ☐	No ☐	N/A ☒

Additional Comments: Samples received out of Holding time for NO_2 analysis. (#002, 003, 006).

SRChecklist 2016.1

Inter-Office Shipment

IOS Number **112384**

Date/Time: 08/16/18 17:43
Lab# From: **Phoenix**
Lab# To: **Houston**

Created by: Ruriko Konuma
Delivery Priority:
Air Bill No.: 772997615049

Please send report to: Skip Harden
Address: 2525 West Huntington Drive, Suite 102
Phone: Tempe, AZ 85282
E-Mail: skip.harden@xenco.com

Sample Id	Matrix	Client Sample Id	Sample Collection	Method	Method Name	Lab Due	HT Due	PM	Analytes	Sign
595905-001	W	MW02-714-081518	08/15/18 09:00	SW6010C_RCRA	Total Metals by SW 6010C	08/24/18	02/11/19	WWH	AG AS BA CD CO CR CU	
595905-001	W	MW02-714-081518	08/15/18 09:00	E300	Inorganic Anions by EPA 300	08/24/18	09/12/18	WWH	CL F SO4	
595905-001	W	MW02-714-081518	08/15/18 09:00	E353.2	Nitrogen, Nitrate-Nitrite by EPA 353.2	08/24/18	09/12/18	WWH	NO3N	
595905-002	W	MW03-724-081318	08/13/18 12:30	SW6010C_RCRA	Total Metals by SW 6010C	08/24/18	02/09/19	WWH	AG AS BA CD CO CR CU	
595905-002	W	MW03-724-081318	08/13/18 12:30	E300	Inorganic Anions by EPA 300	08/24/18	09/10/18	WWH	CL F SO4	
595905-002	W	MW03-724-081318	08/13/18 12:30	E353.2	Nitrogen, Nitrate-Nitrite by EPA 353.2	08/24/18	09/10/18	WWH	NO3N	
595905-003	W	MW04-708-081318	08/13/18 09:00	E353.2	Nitrogen, Nitrate-Nitrite by EPA 353.2	08/24/18	09/10/18	WWH	NO3N	
595905-003	W	MW04-708-081318	08/13/18 09:00	E300	Inorganic Anions by EPA 300	08/24/18	09/10/18	WWH	CL F SO4	
595905-003	W	MW04-708-081318	08/13/18 09:00	SW6010C_RCRA	Total Metals by SW 6010C	08/24/18	02/09/19	WWH	AG AS BA CD CO CR CU	
595905-004	W	MW05-704-081418	08/14/18 10:45	E300	Inorganic Anions by EPA 300	08/24/18	09/11/18	WWH	CL F SO4	
595905-004	W	MW05-704-081418	08/14/18 10:45	E353.2	Nitrogen, Nitrate-Nitrite by EPA 353.2	08/24/18	09/11/18	WWH	NO3N	
595905-004	W	MW05-704-081418	08/14/18 10:45	SW6010C_RCRA	Total Metals by SW 6010C	08/24/18	02/10/19	WWH	AG AS BA CD CO CR CU	
595905-005	W	MW06-720-081318	08/13/18 11:00	E300	Inorganic Anions by EPA 300	08/24/18	09/10/18	WWH	CL F SO4	
595905-005	W	MW06-720-081318	08/13/18 11:00	E353.2	Nitrogen, Nitrate-Nitrite by EPA 353.2	08/24/18	09/10/18	WWH	NO3N	
595905-005	W	MW06-720-081318	08/13/18 11:00	SW6010C_RCRA	Total Metals by SW 6010C	08/24/18	02/09/19	WWH	AG AS BA CD CO CR CU	
595905-006	W	MW07-718-081318	08/13/18 10:00	E353.2	Nitrogen, Nitrate-Nitrite by EPA 353.2	08/24/18	09/10/18	WWH	NO3N	
595905-006	W	MW07-718-081318	08/13/18 10:00	E300	Inorganic Anions by EPA 300	08/24/18	09/10/18	WWH	CL F SO4	
595905-006	W	MW07-718-081318	08/13/18 10:00	SW6010C_RCRA	Total Metals by SW 6010C	08/24/18	02/09/19	WWH	AG AS BA CD CO CR CU	
595905-007	W	MW08-742-081418	08/14/18 13:00	E300	Inorganic Anions by EPA 300	08/24/18	09/11/18	WWH	CL F SO4	
595905-007	W	MW08-742-081418	08/14/18 13:00	E353.2	Nitrogen, Nitrate-Nitrite by EPA 353.2	08/24/18	09/11/18	WWH	NO3N	
595905-007	W	MW08-742-081418	08/14/18 13:00	SW6010C_RCRA	Total Metals by SW 6010C	08/24/18	02/10/19	WWH	AG AS BA CD CO CR CU	
595905-008	W	PW-734-081518	08/15/18 14:30	SW6010C_RCRA	Total Metals by SW 6010C	08/24/18	02/11/19	WWH	AG AS BA CD CO CR CU	
595905-008	W	PW-734-081518	08/15/18 14:30	E353.2	Nitrogen, Nitrate-Nitrite by EPA 353.2	08/24/18	09/12/18	WWH	NO3N	
595905-008	W	PW-734-081518	08/15/18 14:30	E300	Inorganic Anions by EPA 300	08/24/18	09/12/18	WWH	CL F SO4	
595905-009	W	DUP01-081418	08/14/18 14:30	E300	Inorganic Anions by EPA 300	08/24/18	09/11/18	WWH	CL F SO4	

Inter-Office Shipment

IOS Number **112384**

Date/Time: 08/16/18 17:43
Lab# From: **Phoenix**
Lab# To: **Houston**

Created by: Ruriko Konuma
Delivery Priority:
Air Bill No.: 772997615049

Please send report to: Skip Harden
Address: 2525 West Huntington Drive, Suite 102
Phone: Tempe, AZ 85282
E-Mail: skip.harden@xenco.com

Sample Id	Matrix	Client Sample Id	Sample Collection	Method	Method Name	Lab Due	HT Due	PM	Analytes	Sign
595905-009	W	DUP01-081418	08/14/18 14:30	E353.2	Nitrogen, Nitrate-Nitrite by EPA 353.2	08/24/18	09/11/18	WWH	NO3N	
595905-009	W	DUP01-081418	08/14/18 14:30	SW6010C_RCRA	Total Metals by SW 6010C	08/24/18	02/10/19	WWH	AG AS BA CD CO CR CU	

Inter Office Shipment or Sample Comments:

Relinquished By Ruriko Konuma

Date Relinquished: 08/16/2018

Received By: Monica Shakhshir

Date Received: 08/17/2018 09:10

Cooler Temperature: 1.2

Inter-Office Shipment

IOS Number **112998**

Date/Time: 08/28/18 16:12
Lab# From: **Phoenix**
Lab# To: **Houston**

Created by: Skip Harden
Delivery Priority:
Air Bill No.: 773086580468

Please send report to: Skip Harden
Address: 2525 West Huntington Drive, Suite 102
Phone: Tempe, AZ 85282
E-Mail: skip.harden@xenco.com

Sample Id	Matrix	Client Sample Id	Sample Collection	Method	Method Name	Lab Due	HT Due	PM	Analytes	Sign
595905-008	W	PW-734-081518	08/15/18 14:30	SW8260B_AZ	VOCs by SW 8260B	**08/29/18**	**08/29/18**	WWH	ACE BDCME BRBZ BRCI	

Inter Office Shipment or Sample Comments:

Relinquished By Skip Harden

Date Relinquished: 08/28/2018

Received By: Monica Shakhshir

Date Received: 08/29/2018 09:10

Cooler Temperature: 1.9

XENCO Laboratories

Inter Office Report- Sample Receipt Checklist

Sent To: Houston

IOS #: 112384

Acceptable Temperature Range: 0 - 6 degC
Air and Metal samples Acceptable Range: Ambient
Temperature Measuring device used : hou-068

Sent By: Ruriko Konuma **Date Sent:** 08/16/2018 05:43 PM

Received By: Monica Shakhshir **Date Received:** 08/17/2018 09:10 AM

Sample Receipt Checklist		Comments
#1 *Temperature of cooler(s)?	1.2	
#2 *Shipping container in good condition?	**Yes**	
#3 *Samples received with appropriate temperature?	**Yes**	
#4 *Custody Seals intact on shipping container/ cooler?	**Yes**	
#5 *Custody Seals Signed and dated for Containers/coolers	**Yes**	
#6 *IOS present?	**Yes**	
#7 Any missing/extra samples?	**No**	
#8 IOS agrees with sample label(s)/matrix?	**Yes**	
#9 Sample matrix/ properties agree with IOS?	**Yes**	
#10 Samples in proper container/ bottle?	**Yes**	
#11 Samples properly preserved?	**Yes**	
#12 Sample container(s) intact?	**Yes**	
#13 Sufficient sample amount for indicated test(s)?	**Yes**	
#14 All samples received within hold time?	**Yes**	

*** Must be completed for after-hours delivery of samples prior to placing in the refrigerator**

NonConformance:

Corrective Action Taken:

Nonconformance Documentation

Contact: _____ **Contacted by :** _____ **Date:** _____

Checklist reviewed by: _____ Date: 08/17/2018
Monica Shakhshir

XENCO Laboratories

Inter Office Report- Sample Receipt Checklist

Sent To: Houston

IOS #: 112998

Acceptable Temperature Range: 0 - 6 degC
Air and Metal samples Acceptable Range: Ambient
Temperature Measuring device used : hou-068

Sent By: Skip Harden **Date Sent:** 08/28/2018 04:12 PM

Received By: Monica Shakhshir **Date Received:** 08/29/2018 09:10 AM

Sample Receipt Checklist		Comments
#1 *Temperature of cooler(s)?	1.9	
#2 *Shipping container in good condition?	**Yes**	
#3 *Samples received with appropriate temperature?	**Yes**	
#4 *Custody Seals intact on shipping container/ cooler?	**Yes**	
#5 *Custody Seals Signed and dated for Containers/coolers	**Yes**	
#6 *IOS present?	**Yes**	
#7 Any missing/extra samples?	**No**	
#8 IOS agrees with sample label(s)/matrix?	**Yes**	
#9 Sample matrix/ properties agree with IOS?	**Yes**	
#10 Samples in proper container/ bottle?	**Yes**	
#11 Samples properly preserved?	**Yes**	
#12 Sample container(s) intact?	**Yes**	
#13 Sufficient sample amount for indicated test(s)?	**Yes**	
#14 All samples received within hold time?	**Yes**	

*** Must be completed for after-hours delivery of samples prior to placing in the refrigerator**

NonConformance:

Corrective Action Taken:

Nonconformance Documentation

Contact: _____ **Contacted by :** _____ **Date:** _____

Checklist reviewed by: _____ Date: 08/29/2018
Monica Shakhshir

SOIL VAPOR

Airtech Environmental Laboratories (AEL)
4620 E.Elwood St., Suite 13, Phoenix, AZ 85040 480-968-5888 Fax 480-966-1888

Date: September 21, 2018

Client:	Natalie Chrisman	Work Order #:	18I005
Company:	Wood.	Project Name:	Cave Creek Landfill
Address:	4600 E Washington St, Ste 600	Project Number:	14-2017-2034
	Phoenix, AZ 85034	Received Date:	9/7/2018

Dear Client:

Airtech Environmental Laboratories received eighteen (18) samples for analysis.

All analyses met laboratory QA/QC with any exceptions addressed in the Case Narrative.

If you have any questions or concerns regarding your samples analysis, please contact the laboratory at 480-968-5888

Sincerely,

Yu Min Shi
Technical Director
Airtech Environmental Labs

Arizona ADHS License No. AZ0740

Airtech Environmental Laboratories (AEL)

4620 E.Elwood St., Suite 13, Phoenix, AZ 85040 480-968-5888 Fax 480-966-1888

Date: September 19, 2018

Client:	Natalie Chrisman	Work Order #:	18I005
Company:	Wood.	Project Name:	Cave Creek Landfill
Address:	4600 E Washington St, Ste 600	Project Number:	14-2017-2034
	Phoenix, AZ 85034	Received Date:	9/7/2018

SAMPLE SUMMARY

LAB ID	CLIENT ID	METHOD	SAMPLE DATE	SAMPLE TIME
18I005-01	MW-10-SG-090518	TO-15	9/5/2018	1116
18I005-02	MW-10S-SG-090518	TO-15	9/5/2018	1132
18I005-03	MW-10M-SG-090518	TO-15	9/5/2018	1156
18I005-04	MW-10D-SG-090518	TO-15	9/5/2018	1216
18I005-05	MW-09-SG-090618	TO-15	9/6/2018	812
18I005-06	DUP01-090618	TO-15	9/6/2018	820
18I005-07	MW-09S-SG-090618	TO-15	9/6/2018	830
18I005-08	MW-09M-SG-090618	TO-15	9/6/2018	856
18I005-09	MW-09D-SG-090618	TO-15	9/6/2018	916
18I005-10	TSSV-3D-SG-090618	TO-15	9/6/2018	1041
18I005-11	TSSV-3PZ-SG-090618	TO-15	9/6/2018	1122
18I005-12	DUP02-090618	TO-15	9/6/2018	1130
18I005-13	TSSV-5D-SG-090718	TO-15	9/7/2018	921
18I005-14	TSSV-6S-SG-090718	TO-15	9/7/2018	1111
18I005-15	TSSV-6M-SG-090718	TO-15	9/7/2018	1134
18I005-16	TSSV-6D-SG-090718	TO-15	9/7/2018	1156
18I005-17	TSSV-7S-SG-090718	TO-15	9/7/2018	1231
18I005-18	TSSV-7M-SG-090718	TO-15	9/7/2018	1256

Airtech Environmental Laboratories (AEL)
4620 E.Elwood St., Suite 13, Phoenix, AZ 85040 480-968-5888 Fax 480-966-1888

Date: September 19, 2018

Client:	Natalie Chrisman	Work Order #:	18I005
Company:	Wood.	Project Name:	Cave Creek Landfill
Address:	4600 E Washington St, Ste 600 Phoenix, AZ 85034	Project Number:	14-2017-2034
		Received Date:	09/07/18

Case Narrative

All samples and QC associated with your samples met the quality control objectives.
Data qualifiers in this report are in accordance with ADEQ Data Qualifiers.

T4: Tentatively identified compound. Concentration is estimated and based on the closest internal standard.

Airtech Environmental Laboratories (AEL) - AZ 0740

4620 E.Elwood St., Suite 13, Phoenix, AZ 85040 480-968-5888 Fax 480-966-1888

Client:	Wood.	**Client Sample ID:**	N/A
Project:	Cave Creek Landfill	**Project Number:**	14-2017-2034
Lab Order:	18I005	**Collection:**	N/A
Lab ID:	Kits QC	**Matrix:**	Air

		Canister				Grab Sampler	
		Type		Vacuum	Pressure	Type	
	Client	1.0 liter		before sampled	after sampled	1 minute-fill 1.0L canister	
AEL#	ID	SN#	Clean Batch#	Hg inch	psia	SN#	Clean Batch#
18I005-01	MW-10-SG-090518	E2373	1808-10	29.0	13.34	013	1808-06
18I005-02	MW-10S-SG-090518	1841	1808-06	29.0	13.19	041	1806-03
18I005-03	MW-10M-SG-090518	1815	1808-06	29.0	13.25	164	1806-03
18I005-04	MW-10D-SG-090518	1801	1808-06	29.0	13.21	048	1807-02
18I005-05	MW-09-SG-090618	E2282	1808-06	29.0	13.55	009	1806-03
18I005-06	DUP01-090618	1810	1808-06	29.0	13.62	198	1806-03
18I005-07	MW-09S-SG-090618	E2395	1808-06	29.0	13.26	010	1806-03
18I005-08	MW-09M-SG-090618	E2392	1808-06	29.0	13.50	037	1806-03
18I005-09	MW-09D-SG-090618	E2357	1808-06	29.0	13.40	143	1806-03
18I005-10	TSSV-3D-SG-090618	E2385	1808-05	29.0	13.07	057	1806-03
18I005-11	TSSV-3PZ-SG-090618	E2391	1808-05	29.0	13.14	053	1806-03
18I005-12	DUP02-090618	E2353	1808-05	29.0	13.22	024	1806-03
18I005-13	TSSV-5D-SG-090718	E2298	1808-06	29.0	13.55	207	1806-03
18I005-14	TSSV-6S-SG-090718	E2292	1808-05	29.0	13.32	064	1806-03
18I005-15	TSSV-6M-SG-090718	E2104	1808-05	29.0	13.24	117	1806-03
18I005-16	TSSV-6D-SG-090718	E2094	1808-05	29.0	13.18	091	1806-03
18I005-17	TSSV-7S-SG-090718	E2397	1808-05	29.0	13.22	092	1806-03
18I005-18	TSSV-7M-SG-090718	E2354	1808-10	29.0	13.08	152	1808-06

Airtech Environmental Laboratories (AEL) - AZ 0740

4620 E.Elwood St., Suite 13, Phoenix, AZ 85040 480-968-5888 Fax 480-966-1888

Client:	Wood.	**Client Sample ID:**	MW-10-SG-090518
Project:	Cave Creek Landfill	**Project Number:**	14-2017-2034
Lab Order:	18I005	**Collection:**	9/5/2018
Lab ID:	01	**Matrix:**	Soil vapor

Analyses	ppbv Result	ppbv Limit	ug/M^3 Result	ug/M^3 Limit	Qual	DF	Date Analyzed	CAS#
VOLATILE ORGANICS IN AIR	**TO-15**						Analyst: JJ	
1,1-Dichloroethane	**808**	**100**	**3,270**	**405**		200	9/12/2018	75-34-3
1,1-Dichloroethene	< 100	100	< 397	397		200	9/12/2018	75-35-4
1,2-Dichlorobenzene	< 100	100	< 601	601		200	9/12/2018	95-50-1
1,2-Dichloroethane	< 100	100	< 405	405		200	9/12/2018	107-06-2
2-Butanone (MEK)	< 1,000	1,000	< 2,950	2,950		200	9/12/2018	78-93-3
Acetone	< 1,000	1,000	< 2,380	2,380		200	9/12/2018	67-64-1
Benzene	**106**	**100**	**338**	**319**		200	9/12/2018	71-43-2
Chlorobenzene	< 100	100	< 460	460		200	9/12/2018	108-90-7
Chloroform	< 100	100	< 488	488		200	9/12/2018	67-66-3
cis-1,2-Dichloroethene	< 100	100	< 396	396		200	9/12/2018	156-59-2
Dichlorodifluoromethane(F-12)	**2,170**	**200**	**10,700**	**990**		200	9/12/2018	75-71-8
Ethylbenzene	**178**	**100**	**773**	**434**		200	9/12/2018	100-41-4
m&p-Xylene	< 200	200	< 868	868		200	9/12/2018	179601-23-1
Methylene chloride	< 400	400	< 1,390	1,390		200	9/12/2018	75-09-2
o-Xylene	< 100	100	< 434	434		200	9/12/2018	95-47-6
Tetrachloroethene	**1,050**	**200**	**7,120**	**1,360**		200	9/12/2018	127-18-4
Tetrahydrofuran	< 400	400	< 1,180	1,180		200	9/12/2018	109-99-9
Toluene	**566**	**100**	**2,130**	**377**		200	9/12/2018	108-88-3
trans-1,2-Dichloroethene	< 100	100	< 396	396		200	9/12/2018	156-60-5
Trichloroethene	**4,150**	**100**	**22,300**	**537**		200	9/12/2018	79-01-6
Trichlorofluoromethane(F-11)	**1,220**	**100**	**6,860**	**562**		200	9/12/2018	75-69-4
Trichlorotrifluoroethane(F-113)	**208**	**100**	**1,590**	**766**		200	9/12/2018	76-13-1
Vinyl chloride	< 100	100	< 256	256		200	9/12/2018	75-01-4
Surr: 4-Bromofluorobenzene	87.9	70-130	%REC					

Tentatively Identified Compounds (TIC's)

Difluoroethane	< 2,000	2,000	ppbv		T4	200	9/12/2018

Airtech Environmental Laboratories (AEL) - AZ 0740

4620 E.Elwood St., Suite 13, Phoenix, AZ 85040 480-968-5888 Fax 480-966-1888

Client:	Wood.	**Client Sample ID:**	MW-10S-SG-090518
Project:	Cave Creek Landfill	**Project Number:**	14-2017-2034
Lab Order:	18I005	**Collection:**	9/5/2018
Lab ID:	02	**Matrix:**	Soil vapor

	ppbv		ug/M^3				Date	
Analyses	**Result**	**Limit**	**Result**	**Limit**	**Qual**	**DF**	**Analyzed**	**CAS#**
VOLATILE ORGANICS IN AIR	**TO-15**						Analyst: JJ	
1,1-Dichloroethane	< 100	100	< 405	405		200	9/12/2018	75-34-3
1,1-Dichloroethene	< 100	100	< 397	397		200	9/12/2018	75-35-4
1,2-Dichlorobenzene	< 100	100	< 601	601		200	9/12/2018	95-50-1
1,2-Dichloroethane	< 100	100	< 405	405		200	9/12/2018	107-06-2
2-Butanone (MEK)	< 1,000	1,000	< 2,950	2,950		200	9/12/2018	78-93-3
Acetone	< 1,000	1,000	< 2,380	2,380		200	9/12/2018	67-64-1
Benzene	< 100	100	< 319	319		200	9/12/2018	71-43-2
Chlorobenzene	< 100	100	< 460	460		200	9/12/2018	108-90-7
Chloroform	< 100	100	< 488	488		200	9/12/2018	67-66-3
cis-1,2-Dichloroethene	< 100	100	< 396	396		200	9/12/2018	156-59-2
Dichlorodifluoromethane(F-12)	**3,230**	**200**	**16,000**	**990**		200	9/12/2018	75-71-8
Ethylbenzene	< 100	100	< 434	434		200	9/12/2018	100-41-4
m&p-Xylene	< 200	200	< 868	868		200	9/12/2018	179601-23-1
Methylene chloride	< 400	400	< 1,390	1,390		200	9/12/2018	75-09-2
o-Xylene	< 100	100	< 434	434		200	9/12/2018	95-47-6
Tetrachloroethene	**462**	**200**	**3,130**	**1,360**		200	9/12/2018	127-18-4
Tetrahydrofuran	< 400	400	< 1,180	1,180		200	9/12/2018	109-99-9
Toluene	< 100	100	< 377	377		200	9/12/2018	108-88-3
trans-1,2-Dichloroethene	< 100	100	< 396	396		200	9/12/2018	156-60-5
Trichloroethene	**390**	**100**	**2,090**	**537**		200	9/12/2018	79-01-6
Trichlorofluoromethane(F-11)	**908**	**100**	**5,100**	**562**		200	9/12/2018	75-69-4
Trichlorotrifluoroethane(F-113)	**182**	**100**	**1,390**	**766**		200	9/12/2018	76-13-1
Vinyl chloride	< 100	100	< 256	256		200	9/12/2018	75-01-4
Surr: 4-Bromofluorobenzene	87.5	70-130	%REC					

Tentatively Identified Compounds (TIC's)

Difluoroethane	< 2,000	2,000	ppbv		T4	200	9/12/2018

Airtech Environmental Laboratories (AEL) - AZ 0740

4620 E.Elwood St., Suite 13, Phoenix, AZ 85040 480-968-5888 Fax 480-966-1888

Client:	Wood.	**Client Sample ID:**	MW-10M-SG-090518
Project:	Cave Creek Landfill	**Project Number:**	14-2017-2034
Lab Order:	18I005	**Collection:**	9/5/2018
Lab ID:	03	**Matrix:**	Soil vapor

	ppbv		ug/M^3				Date	
Analyses	**Result**	**Limit**	**Result**	**Limit**	**Qual**	**DF**	**Analyzed**	**CAS#**
VOLATILE ORGANICS IN AIR	**TO-15**						Analyst: JJ	
1,1-Dichloroethane	**840**	**100**	**3,400**	**405**		200	9/12/2018	75-34-3
1,1-Dichloroethene	**332**	**100**	**1,320**	**397**		200	9/12/2018	75-35-4
1,2-Dichlorobenzene	< 100	100	< 601	601		200	9/12/2018	95-50-1
1,2-Dichloroethane	< 100	100	< 405	405		200	9/12/2018	107-06-2
2-Butanone (MEK)	< 1,000	1,000	< 2,950	2,950		200	9/12/2018	78-93-3
Acetone	< 1,000	1,000	< 2,380	2,380		200	9/12/2018	67-64-1
Benzene	**110**	**100**	**351**	**319**		200	9/12/2018	71-43-2
Chlorobenzene	< 100	100	< 460	460		200	9/12/2018	108-90-7
Chloroform	< 100	100	< 488	488		200	9/12/2018	67-66-3
cis-1,2-Dichloroethene	**136**	**100**	**539**	**396**		200	9/12/2018	156-59-2
Dichlorodifluoromethane(F-12)	**7,440**	**200**	**36,800**	**990**		200	9/12/2018	75-71-8
Ethylbenzene	< 100	100	< 434	434		200	9/12/2018	100-41-4
m&p-Xylene	< 200	200	< 868	868		200	9/12/2018	179601-23-1
Methylene chloride	**500**	**400**	**1,740**	**1,390**		200	9/12/2018	75-09-2
o-Xylene	< 100	100	< 434	434		200	9/12/2018	95-47-6
Tetrachloroethene	**742**	**200**	**5,030**	**1,360**		200	9/12/2018	127-18-4
Tetrahydrofuran	< 400	400	< 1,180	1,180		200	9/12/2018	109-99-9
Toluene	< 100	100	< 377	377		200	9/12/2018	108-88-3
trans-1,2-Dichloroethene	< 100	100	< 396	396		200	9/12/2018	156-60-5
Trichloroethene	**272**	**100**	**1,460**	**537**		200	9/12/2018	79-01-6
Trichlorofluoromethane(F-11)	**2,230**	**100**	**12,500**	**562**		200	9/12/2018	75-69-4
Trichlorotrifluoroethane(F-113)	**390**	**100**	**2,990**	**766**		200	9/12/2018	76-13-1
Vinyl chloride	< 100	100	< 256	256		200	9/12/2018	75-01-4
Surr: 4-Bromofluorobenzene	88.5	70-130	%REC					

Tentatively Identified Compounds (TIC's)

Difluoroethane	< 2,000	2,000	ppbv	T4	200	9/12/2018	

Airtech Environmental Laboratories (AEL) - AZ 0740

4620 E.Elwood St., Suite 13, Phoenix, AZ 85040 480-968-5888 Fax 480-966-1888

Client:	Wood.	**Client Sample ID:**	MW-10D-SG-090518
Project:	Cave Creek Landfill	**Project Number:**	14-2017-2034
Lab Order:	18I005	**Collection:**	9/5/2018
Lab ID:	04	**Matrix:**	Soil vapor

	ppbv		ug/M^3				Date	
Analyses	**Result**	**Limit**	**Result**	**Limit**	**Qual**	**DF**	**Analyzed**	**CAS#**
VOLATILE ORGANICS IN AIR	**TO-15**						Analyst: JJ	
1,1-Dichloroethane	**2,870**	**100**	**11,600**	**405**		200	9/12/2018	75-34-3
1,1-Dichloroethene	**320**	**100**	**1,270**	**397**		200	9/12/2018	75-35-4
1,2-Dichlorobenzene	< 100	100	< 601	601		200	9/12/2018	95-50-1
1,2-Dichloroethane	< 100	100	< 405	405		200	9/12/2018	107-06-2
2-Butanone (MEK)	< 1,000	1,000	< 2,950	2,950		200	9/12/2018	78-93-3
Acetone	< 1,000	1,000	< 2,380	2,380		200	9/12/2018	67-64-1
Benzene	**224**	**100**	**715**	**319**		200	9/12/2018	71-43-2
Chlorobenzene	< 100	100	< 460	460		200	9/12/2018	108-90-7
Chloroform	< 100	100	< 488	488		200	9/12/2018	67-66-3
cis-1,2-Dichloroethene	< 100	100	< 396	396		200	9/12/2018	156-59-2
Dichlorodifluoromethane(F-12)	**6,960**	**200**	**34,500**	**990**		200	9/12/2018	75-71-8
Ethylbenzene	**144**	**100**	**625**	**434**		200	9/12/2018	100-41-4
m&p-Xylene	< 200	200	< 868	868		200	9/12/2018	179601-23-1
Methylene chloride	< 400	400	< 1,390	1,390		200	9/12/2018	75-09-2
o-Xylene	< 100	100	< 434	434		200	9/12/2018	95-47-6
Tetrachloroethene	**1,470**	**200**	**9,970**	**1,360**		200	9/12/2018	127-18-4
Tetrahydrofuran	< 400	400	< 1,180	1,180		200	9/12/2018	109-99-9
Toluene	**1,560**	**100**	**5,880**	**377**		200	9/12/2018	108-88-3
trans-1,2-Dichloroethene	< 100	100	< 396	396		200	9/12/2018	156-60-5
Trichloroethene	**1,060**	**100**	**5,690**	**537**		200	9/12/2018	79-01-6
Trichlorofluoromethane(F-11)	**2,540**	**100**	**14,300**	**562**		200	9/12/2018	75-69-4
Trichlorotrifluoroethane(F-113)	**340**	**100**	**2,600**	**766**		200	9/12/2018	76-13-1
Vinyl chloride	< 100	100	< 256	256		200	9/12/2018	75-01-4
Surr: 4-Bromofluorobenzene	91.3	70-130	%REC					

Tentatively Identified Compounds (TIC's)

Difluoroethane	< 2,000	2,000	ppbv	T4	200	9/12/2018	

Airtech Environmental Laboratories (AEL) - AZ 0740

4620 E.Elwood St., Suite 13, Phoenix, AZ 85040 480-968-5888 Fax 480-966-1888

Client:	Wood.	**Client Sample ID:**	MW-09-SG-090618
Project:	Cave Creek Landfill	**Project Number:**	14-2017-2034
Lab Order:	18I005	**Collection:**	9/6/2018
Lab ID:	05	**Matrix:**	Soil vapor

Analyses	ppbv Result	ppbv Limit	ug/M^3 Result	ug/M^3 Limit	Qual	DF	Date Analyzed	CAS#
VOLATILE ORGANICS IN AIR	**TO-15**						Analyst: JJ	
1,1-Dichloroethane	< 2,500	2,500	< 10,100	10,100		5,000	9/12/2018	75-34-3
1,1-Dichloroethene	< 2,500	2,500	< 9,930	9,930		5,000	9/12/2018	75-35-4
1,2-Dichlorobenzene	< 2,500	2,500	< 15,000	15,000		5,000	9/12/2018	95-50-1
1,2-Dichloroethane	< 2,500	2,500	< 10,100	10,100		5,000	9/12/2018	107-06-2
2-Butanone (MEK)	< 25,000	25,000	< 73,800	73,800		5,000	9/12/2018	78-93-3
Acetone	< 25,000	25,000	< 59,500	59,500		5,000	9/12/2018	67-64-1
Benzene	< 2,500	2,500	< 7,980	7,980		5,000	9/12/2018	71-43-2
Chlorobenzene	< 2,500	2,500	< 11,500	11,500		5,000	9/12/2018	108-90-7
Chloroform	< 2,500	2,500	< 12,200	12,200		5,000	9/12/2018	67-66-3
cis-1,2-Dichloroethene	< 2,500	2,500	< 9,900	9,900		5,000	9/12/2018	156-59-2
Dichlorodifluoromethane(F-12)	< 5,000	5,000	< 24,800	24,800		5,000	9/12/2018	75-71-8
Ethylbenzene	< 2,500	2,500	< 10,900	10,900		5,000	9/12/2018	100-41-4
m&p-Xylene	< 5,000	5,000	< 21,700	21,700		5,000	9/12/2018	179601-23-1
Methylene chloride	< 10,000	10,000	< 34,700	34,700		5,000	9/12/2018	75-09-2
o-Xylene	< 2,500	2,500	< 10,900	10,900		5,000	9/12/2018	95-47-6
Tetrachloroethene	< 5,000	5,000	< 33,900	33,900		5,000	9/12/2018	127-18-4
Tetrahydrofuran	< 10,000	10,000	< 29,500	29,500		5,000	9/12/2018	109-99-9
Toluene	< 2,500	2,500	< 9,430	9,430		5,000	9/12/2018	108-88-3
trans-1,2-Dichloroethene	< 2,500	2,500	< 9,900	9,900		5,000	9/12/2018	156-60-5
Trichloroethene	**141,000**	**2,500**	**757,000**	**13,400**		5,000	9/12/2018	79-01-6
Trichlorofluoromethane(F-11)	< 2,500	2,500	< 14,100	14,100		5,000	9/12/2018	75-69-4
Trichlorotrifluoroethane(F-113)	**7,250**	**2,500**	**55,500**	**19,200**		5,000	9/12/2018	76-13-1
Vinyl chloride	< 2,500	2,500	< 6,400	6,400		5,000	9/12/2018	75-01-4
Surr: 4-Bromofluorobenzene	89.5	70-130	%REC					

Tentatively Identified Compounds (TIC's)

Difluoroethane	< 50,000	50,000	ppbv		T4	5,000	9/12/2018

Airtech Environmental Laboratories (AEL) - AZ 0740

4620 E.Elwood St., Suite 13, Phoenix, AZ 85040 480-968-5888 Fax 480-966-1888

Client:	Wood.	**Client Sample ID:**	DUP01-090618
Project:	Cave Creek Landfill	**Project Number:**	14-2017-2034
Lab Order:	18I005	**Collection:**	9/6/2018
Lab ID:	06	**Matrix:**	Soil vapor

	ppbv		ug/M^3				Date	
Analyses	**Result**	**Limit**	**Result**	**Limit**	**Qual**	**DF**	**Analyzed**	**CAS#**
VOLATILE ORGANICS IN AIR	**TO-15**						Analyst: JJ	
1,1-Dichloroethane	< 2,500	2,500	< 10,100	10,100		5,000	9/12/2018	75-34-3
1,1-Dichloroethene	< 2,500	2,500	< 9,930	9,930		5,000	9/12/2018	75-35-4
1,2-Dichlorobenzene	< 2,500	2,500	< 15,000	15,000		5,000	9/12/2018	95-50-1
1,2-Dichloroethane	< 2,500	2,500	< 10,100	10,100		5,000	9/12/2018	107-06-2
2-Butanone (MEK)	< 25,000	25,000	< 73,800	73,800		5,000	9/12/2018	78-93-3
Acetone	< 25,000	25,000	< 59,500	59,500		5,000	9/12/2018	67-64-1
Benzene	< 2,500	2,500	< 7,980	7,980		5,000	9/12/2018	71-43-2
Chlorobenzene	< 2,500	2,500	< 11,500	11,500		5,000	9/12/2018	108-90-7
Chloroform	< 2,500	2,500	< 12,200	12,200		5,000	9/12/2018	67-66-3
cis-1,2-Dichloroethene	< 2,500	2,500	< 9,900	9,900		5,000	9/12/2018	156-59-2
Dichlorodifluoromethane(F-12)	< 5,000	5,000	< 24,800	24,800		5,000	9/12/2018	75-71-8
Ethylbenzene	< 2,500	2,500	< 10,900	10,900		5,000	9/12/2018	100-41-4
m&p-Xylene	< 5,000	5,000	< 21,700	21,700		5,000	9/12/2018	179601-23-1
Methylene chloride	< 10,000	10,000	< 34,700	34,700		5,000	9/12/2018	75-09-2
o-Xylene	< 2,500	2,500	< 10,900	10,900		5,000	9/12/2018	95-47-6
Tetrachloroethene	< 5,000	5,000	< 33,900	33,900		5,000	9/12/2018	127-18-4
Tetrahydrofuran	< 10,000	10,000	< 29,500	29,500		5,000	9/12/2018	109-99-9
Toluene	< 2,500	2,500	< 9,430	9,430		5,000	9/12/2018	108-88-3
trans-1,2-Dichloroethene	< 2,500	2,500	< 9,900	9,900		5,000	9/12/2018	156-60-5
Trichloroethene	**183,000**	**2,500**	**983,000**	**13,400**		5,000	9/12/2018	79-01-6
Trichlorofluoromethane(F-11)	< 2,500	2,500	< 14,100	14,100		5,000	9/12/2018	75-69-4
Trichlorotrifluoroethane(F-113)	**7,650**	**2,500**	**58,600**	**19,200**		5,000	9/12/2018	76-13-1
Vinyl chloride	< 2,500	2,500	< 6,400	6,400		5,000	9/12/2018	75-01-4
Surr: 4-Bromofluorobenzene	91.9	70-130	%REC					

Tentatively Identified Compounds (TIC's)

Difluoroethane	< 50,000	50,000	ppbv		T4	5,000	9/12/2018

Airtech Environmental Laboratories (AEL) - AZ 0740

4620 E.Elwood St., Suite 13, Phoenix, AZ 85040 480-968-5888 Fax 480-966-1888

Client:	Wood.	**Client Sample ID:**	MW-09S-SG-090618
Project:	Cave Creek Landfill	**Project Number:**	14-2017-2034
Lab Order:	18I005	**Collection:**	9/6/2018
Lab ID:	07	**Matrix:**	Soil vapor

	ppbv		ug/M^3				Date	
Analyses	**Result**	**Limit**	**Result**	**Limit**	**Qual**	**DF**	**Analyzed**	**CAS#**
VOLATILE ORGANICS IN AIR	**TO-15**						Analyst: JJ	
1,1-Dichloroethane	< 100	100	< 405	405		200	9/13/2018	75-34-3
1,1-Dichloroethene	< 100	100	< 397	397		200	9/13/2018	75-35-4
1,2-Dichlorobenzene	< 100	100	< 601	601		200	9/13/2018	95-50-1
1,2-Dichloroethane	< 100	100	< 405	405		200	9/13/2018	107-06-2
2-Butanone (MEK)	< 1,000	1,000	< 2,950	2,950		200	9/13/2018	78-93-3
Acetone	< 1,000	1,000	< 2,380	2,380		200	9/13/2018	67-64-1
Benzene	< 100	100	< 319	319		200	9/13/2018	71-43-2
Chlorobenzene	< 100	100	< 460	460		200	9/13/2018	108-90-7
Chloroform	< 100	100	< 488	488		200	9/13/2018	67-66-3
cis-1,2-Dichloroethene	< 100	100	< 396	396		200	9/13/2018	156-59-2
Dichlorodifluoromethane(F-12)	< 200	200	< 990	990		200	9/13/2018	75-71-8
Ethylbenzene	< 100	100	< 434	434		200	9/13/2018	100-41-4
m&p-Xylene	< 200	200	< 868	868		200	9/13/2018	179601-23-1
Methylene chloride	< 400	400	< 1,390	1,390		200	9/13/2018	75-09-2
o-Xylene	< 100	100	< 434	434		200	9/13/2018	95-47-6
Tetrachloroethene	**256**	**200**	**1,740**	**1,360**		200	9/13/2018	127-18-4
Tetrahydrofuran	< 400	400	< 1,180	1,180		200	9/13/2018	109-99-9
Toluene	< 100	100	< 377	377		200	9/13/2018	108-88-3
trans-1,2-Dichloroethene	< 100	100	< 396	396		200	9/13/2018	156-60-5
Trichloroethene	**3,020**	**100**	**16,200**	**537**		200	9/13/2018	79-01-6
Trichlorofluoromethane(F-11)	< 100	100	< 562	562		200	9/13/2018	75-69-4
Trichlorotrifluoroethane(F-113)	< 100	100	< 766	766		200	9/13/2018	76-13-1
Vinyl chloride	< 100	100	< 256	256		200	9/13/2018	75-01-4
Surr: 4-Bromofluorobenzene	87.9	70-130	%REC					

Tentatively Identified Compounds (TIC's)

Difluoroethane	< 2,000	2,000	ppbv		T4	200	9/13/2018

Airtech Environmental Laboratories (AEL) - AZ 0740

4620 E.Elwood St., Suite 13, Phoenix, AZ 85040 480-968-5888 Fax 480-966-1888

Client:	Wood.	**Client Sample ID:**	MW-09M-SG-090618
Project:	Cave Creek Landfill	**Project Number:**	14-2017-2034
Lab Order:	18I005	**Collection:**	9/6/2018
Lab ID:	08	**Matrix:**	Soil vapor

	ppbv		ug/M^3				Date	
Analyses	**Result**	**Limit**	**Result**	**Limit**	**Qual**	**DF**	**Analyzed**	**CAS#**
VOLATILE ORGANICS IN AIR		**TO-15**					Analyst: JJ	
1,1-Dichloroethane	< 50	50	< 203	203		100	9/13/2018	75-34-3
1,1-Dichloroethene	< 50	50	< 199	199		100	9/13/2018	75-35-4
1,2-Dichlorobenzene	< 50	50	< 301	301		100	9/13/2018	95-50-1
1,2-Dichloroethane	< 50	50	< 203	203		100	9/13/2018	107-06-2
2-Butanone (MEK)	< 500	500	< 1,480	1,480		100	9/13/2018	78-93-3
Acetone	< 500	500	< 1,190	1,190		100	9/13/2018	67-64-1
Benzene	< 50	50	< 160	160		100	9/13/2018	71-43-2
Chlorobenzene	< 50	50	< 230	230		100	9/13/2018	108-90-7
Chloroform	< 50	50	< 244	244		100	9/13/2018	67-66-3
cis-1,2-Dichloroethene	< 50	50	< 198	198		100	9/13/2018	156-59-2
Dichlorodifluoromethane(F-12)	**271**	**100**	**1,340**	**495**		100	9/13/2018	75-71-8
Ethylbenzene	< 50	50	< 217	217		100	9/13/2018	100-41-4
m&p-Xylene	< 100	100	< 434	434		100	9/13/2018	179601-23-1
Methylene chloride	< 200	200	< 694	694		100	9/13/2018	75-09-2
o-Xylene	< 50	50	< 217	217		100	9/13/2018	95-47-6
Tetrachloroethene	**333**	**100**	**2,260**	**678**		100	9/13/2018	127-18-4
Tetrahydrofuran	< 200	200	< 590	590		100	9/13/2018	109-99-9
Toluene	< 50	50	< 189	189		100	9/13/2018	108-88-3
trans-1,2-Dichloroethene	< 50	50	< 198	198		100	9/13/2018	156-60-5
Trichloroethene	**1,020**	**50**	**5,480**	**269**		100	9/13/2018	79-01-6
Trichlorofluoromethane(F-11)	**215**	**50**	**1,210**	**281**		100	9/13/2018	75-69-4
Trichlorotrifluoroethane(F-113)	**697**	**50**	**5,340**	**383**		100	9/13/2018	76-13-1
Vinyl chloride	< 50	50	< 128	128		100	9/13/2018	75-01-4
Surr: 4-Bromofluorobenzene	88.3	70-130	%REC					

Tentatively Identified Compounds (TIC's)

Difluoroethane	< 1,000	1,000	ppbv	T4	100	9/13/2018	

Airtech Environmental Laboratories (AEL) - AZ 0740

4620 E.Elwood St., Suite 13, Phoenix, AZ 85040 480-968-5888 Fax 480-966-1888

Client:	Wood.	**Client Sample ID:**	MW-09D-SG-090618
Project:	Cave Creek Landfill	**Project Number:**	14-2017-2034
Lab Order:	18I005	**Collection:**	9/6/2018
Lab ID:	09	**Matrix:**	Soil vapor

	ppbv		ug/M^3				Date	
Analyses	**Result**	**Limit**	**Result**	**Limit**	**Qual**	**DF**	**Analyzed**	**CAS#**
VOLATILE ORGANICS IN AIR	**TO-15**						Analyst: JJ	
1,1-Dichloroethane	< 50	50	< 203	203		100	9/13/2018	75-34-3
1,1-Dichloroethene	< 50	50	< 199	199		100	9/13/2018	75-35-4
1,2-Dichlorobenzene	< 50	50	< 301	301		100	9/13/2018	95-50-1
1,2-Dichloroethane	< 50	50	< 203	203		100	9/13/2018	107-06-2
2-Butanone (MEK)	< 500	500	< 1,480	1,480		100	9/13/2018	78-93-3
Acetone	< 500	500	< 1,190	1,190		100	9/13/2018	67-64-1
Benzene	< 50	50	< 160	160		100	9/13/2018	71-43-2
Chlorobenzene	< 50	50	< 230	230		100	9/13/2018	108-90-7
Chloroform	< 50	50	< 244	244		100	9/13/2018	67-66-3
cis-1,2-Dichloroethene	< 50	50	< 198	198		100	9/13/2018	156-59-2
Dichlorodifluoromethane(F-12)	< 100	100	< 495	495		100	9/13/2018	75-71-8
Ethylbenzene	< 50	50	< 217	217		100	9/13/2018	100-41-4
m&p-Xylene	< 100	100	< 434	434		100	9/13/2018	179601-23-1
Methylene chloride	< 200	200	< 694	694		100	9/13/2018	75-09-2
o-Xylene	< 50	50	< 217	217		100	9/13/2018	95-47-6
Tetrachloroethene	**243**	**100**	**1,650**	**678**		100	9/13/2018	127-18-4
Tetrahydrofuran	< 200	200	< 590	590		100	9/13/2018	109-99-9
Toluene	< 50	50	< 189	189		100	9/13/2018	108-88-3
trans-1,2-Dichloroethene	< 50	50	< 198	198		100	9/13/2018	156-60-5
Trichloroethene	**1,590**	**50**	**8,540**	**269**		100	9/13/2018	79-01-6
Trichlorofluoromethane(F-11)	< 50	50	< 281	281		100	9/13/2018	75-69-4
Trichlorotrifluoroethane(F-113)	**797**	**50**	**6,110**	**383**		100	9/13/2018	76-13-1
Vinyl chloride	< 50	50	< 128	128		100	9/13/2018	75-01-4
Surr: 4-Bromofluorobenzene	88.7	70-130	%REC					

Tentatively Identified Compounds (TIC's)

Difluoroethane	< 1,000	1,000	ppbv		T4	100	9/13/2018

Airtech Environmental Laboratories (AEL) - AZ 0740

4620 E.Elwood St., Suite 13, Phoenix, AZ 85040 480-968-5888 Fax 480-966-1888

Client:	Wood.	**Client Sample ID:**	TSSV-3D-SG-090618
Project:	Cave Creek Landfill	**Project Number:**	14-2017-2034
Lab Order:	18I005	**Collection:**	9/6/2018
Lab ID:	10	**Matrix:**	Soil vapor

	ppbv		ug/M^3				Date	
Analyses	**Result**	**Limit**	**Result**	**Limit**	**Qual**	**DF**	**Analyzed**	**CAS#**
VOLATILE ORGANICS IN AIR		**TO-15**					Analyst: JJ	
1,1-Dichloroethane	**10**	**1.0**	**40.3**	**4.05**		2	9/13/2018	75-34-3
1,1-Dichloroethene	< 1.0	1.0	< 3.97	3.97		2	9/13/2018	75-35-4
1,2-Dichlorobenzene	**1.9**	**1.0**	**11.5**	**6.01**		2	9/13/2018	95-50-1
1,2-Dichloroethane	< 1.0	1.0	< 4.05	4.05		2	9/13/2018	107-06-2
2-Butanone (MEK)	< 10	10	< 29.5	29.5		2	9/13/2018	78-93-3
Acetone	< 10	10	< 23.8	23.8		2	9/13/2018	67-64-1
Benzene	**2.7**	**1.0**	**8.49**	**3.19**		2	9/13/2018	71-43-2
Chlorobenzene	**1.1**	**1.0**	**5.06**	**4.60**		2	9/13/2018	108-90-7
Chloroform	< 1.0	1.0	< 4.88	4.88		2	9/13/2018	67-66-3
cis-1,2-Dichloroethene	< 1.0	1.0	< 3.96	3.96		2	9/13/2018	156-59-2
Dichlorodifluoromethane(F-12)	**32**	**2.0**	**160**	**9.90**		2	9/13/2018	75-71-8
Ethylbenzene	**4.8**	**1.0**	**20.7**	**4.34**		2	9/13/2018	100-41-4
m&p-Xylene	**21**	**2.0**	**89.8**	**8.68**		2	9/13/2018	179601-23-1
Methylene chloride	< 4.0	4.0	< 13.9	13.9		2	9/13/2018	75-09-2
o-Xylene	**6.2**	**1.0**	**26.9**	**4.34**		2	9/13/2018	95-47-6
Tetrachloroethene	**29**	**2.0**	**198**	**13.6**		2	9/13/2018	127-18-4
Tetrahydrofuran	< 4.0	4.0	< 11.8	11.8		2	9/13/2018	109-99-9
Toluene	**6.4**	**1.0**	**24.3**	**3.77**		2	9/13/2018	108-88-3
trans-1,2-Dichloroethene	< 1.0	1.0	< 3.96	3.96		2	9/13/2018	156-60-5
Trichloroethene	**19**	**1.0**	**100**	**5.37**		2	9/13/2018	79-01-6
Trichlorofluoromethane(F-11)	**8.6**	**1.0**	**48.4**	**5.62**		2	9/13/2018	75-69-4
Trichlorotrifluoroethane(F-113)	**2.2**	**1.0**	**16.5**	**7.66**		2	9/13/2018	76-13-1
Vinyl chloride	< 1.0	1.0	< 2.56	2.56		2	9/13/2018	75-01-4
Surr: 4-Bromofluorobenzene	101	70-130	%REC					

Tentatively Identified Compounds (TIC's)

Difluoroethane	< 20	20	ppbv		T4	2	9/13/2018

Airtech Environmental Laboratories (AEL) - AZ 0740

4620 E.Elwood St., Suite 13, Phoenix, AZ 85040 480-968-5888 Fax 480-966-1888

Client:	Wood.	**Client Sample ID:**	TSSV-3PZ-SG-090618
Project:	Cave Creek Landfill	**Project Number:**	14-2017-2034
Lab Order:	18I005	**Collection:**	9/6/2018
Lab ID:	11	**Matrix:**	Soil vapor

Analyses	ppbv Result	ppbv Limit	ug/M^3 Result	ug/M^3 Limit	Qual	DF	Date Analyzed	CAS#
VOLATILE ORGANICS IN AIR		**TO-15**					Analyst: JJ	
1,1-Dichloroethane	< 10	10	< 40.5	40.5		20	9/14/2018	75-34-3
1,1-Dichloroethene	< 10	10	< 39.7	39.7		20	9/14/2018	75-35-4
1,2-Dichlorobenzene	< 10	10	< 60.1	60.1		20	9/14/2018	95-50-1
1,2-Dichloroethane	< 10	10	< 40.5	40.5		20	9/14/2018	107-06-2
2-Butanone (MEK)	< 100	100	< 295	295		20	9/14/2018	78-93-3
Acetone	< 100	100	< 238	238		20	9/14/2018	67-64-1
Benzene	< 10	10	< 31.9	31.9		20	9/14/2018	71-43-2
Chlorobenzene	< 10	10	< 46.0	46.0		20	9/14/2018	108-90-7
Chloroform	< 10	10	< 48.8	48.8		20	9/14/2018	67-66-3
cis-1,2-Dichloroethene	**17**	**10**	**65.7**	**39.6**		20	9/14/2018	156-59-2
Dichlorodifluoromethane(F-12)	**98**	**20**	**487**	**99.0**		20	9/14/2018	75-71-8
Ethylbenzene	**27**	**10**	**118**	**43.4**		20	9/14/2018	100-41-4
m&p-Xylene	**83**	**20**	**360**	**86.8**		20	9/14/2018	179601-23-1
Methylene chloride	< 40	40	< 139	139		20	9/14/2018	75-09-2
o-Xylene	**26**	**10**	**115**	**43.4**		20	9/14/2018	95-47-6
Tetrachloroethene	**30**	**20**	**205**	**136**		20	9/14/2018	127-18-4
Tetrahydrofuran	< 40	40	< 118	118		20	9/14/2018	109-99-9
Toluene	**14**	**10**	**51.3**	**37.7**		20	9/14/2018	108-88-3
trans-1,2-Dichloroethene	< 10	10	< 39.6	39.6		20	9/14/2018	156-60-5
Trichloroethene	**176**	**10**	**946**	**53.7**		20	9/14/2018	79-01-6
Trichlorofluoromethane(F-11)	**38**	**10**	**215**	**56.2**		20	9/14/2018	75-69-4
Trichlorotrifluoroethane(F-113)	< 10	10	< 76.6	76.6		20	9/14/2018	76-13-1
Vinyl chloride	< 10	10	< 25.6	25.6		20	9/14/2018	75-01-4
Surr: 4-Bromofluorobenzene	93.4	70-130	%REC					

Tentatively Identified Compounds (TIC's)

Difluoroethane	< 200	200	ppbv		T4	20	9/14/2018

Airtech Environmental Laboratories (AEL) - AZ 0740

4620 E.Elwood St., Suite 13, Phoenix, AZ 85040 480-968-5888 Fax 480-966-1888

Client:	Wood.	**Client Sample ID:**	DUP02-090618
Project:	Cave Creek Landfill	**Project Number:**	14-2017-2034
Lab Order:	18I005	**Collection:**	9/6/2018
Lab ID:	12	**Matrix:**	Soil vapor

	ppbv		ug/M^3				Date	
Analyses	**Result**	**Limit**	**Result**	**Limit**	**Qual**	**DF**	**Analyzed**	**CAS#**
VOLATILE ORGANICS IN AIR		**TO-15**					Analyst: JJ	
1,1-Dichloroethane	**11**	**10**	**46.2**	**40.5**		20	9/14/2018	75-34-3
1,1-Dichloroethene	< 10	10	< 39.7	39.7		20	9/14/2018	75-35-4
1,2-Dichlorobenzene	< 10	10	< 60.1	60.1		20	9/14/2018	95-50-1
1,2-Dichloroethane	< 10	10	< 40.5	40.5		20	9/14/2018	107-06-2
2-Butanone (MEK)	< 100	100	< 295	295		20	9/14/2018	78-93-3
Acetone	< 100	100	< 238	238		20	9/14/2018	67-64-1
Benzene	< 10	10	< 31.9	31.9		20	9/14/2018	71-43-2
Chlorobenzene	< 10	10	< 46.0	46.0		20	9/14/2018	108-90-7
Chloroform	< 10	10	< 48.8	48.8		20	9/14/2018	67-66-3
cis-1,2-Dichloroethene	**16**	**10**	**61.8**	**39.6**		20	9/14/2018	156-59-2
Dichlorodifluoromethane(F-12)	**100**	**20**	**497**	**99.0**		20	9/14/2018	75-71-8
Ethylbenzene	**42**	**10**	**182**	**43.4**		20	9/14/2018	100-41-4
m&p-Xylene	**133**	**20**	**577**	**86.8**		20	9/14/2018	179601-23-1
Methylene chloride	< 40	40	< 139	139		20	9/14/2018	75-09-2
o-Xylene	**44**	**10**	**193**	**43.4**		20	9/14/2018	95-47-6
Tetrachloroethene	**35**	**20**	**235**	**136**		20	9/14/2018	127-18-4
Tetrahydrofuran	< 40	40	< 118	118		20	9/14/2018	109-99-9
Toluene	**16**	**10**	**60.3**	**37.7**		20	9/14/2018	108-88-3
trans-1,2-Dichloroethene	< 10	10	< 39.6	39.6		20	9/14/2018	156-60-5
Trichloroethene	**184**	**10**	**990**	**53.7**		20	9/14/2018	79-01-6
Trichlorofluoromethane(F-11)	**37**	**10**	**209**	**56.2**		20	9/14/2018	75-69-4
Trichlorotrifluoroethane(F-113)	< 10	10	< 76.6	76.6		20	9/14/2018	76-13-1
Vinyl chloride	< 10	10	< 25.6	25.6		20	9/14/2018	75-01-4
Surr: 4-Bromofluorobenzene	93.8	70-130	%REC					

Tentatively Identified Compounds (TIC's)

Difluoroethane	< 200	200	ppbv		T4	20	9/14/2018

Airtech Environmental Laboratories (AEL) - AZ 0740

4620 E.Elwood St., Suite 13, Phoenix, AZ 85040 480-968-5888 Fax 480-966-1888

Client:	Wood.	**Client Sample ID:**	TSSV-5D-SG-090718
Project:	Cave Creek Landfill	**Project Number:**	14-2017-2034
Lab Order:	18I005	**Collection:**	9/7/2018
Lab ID:	13	**Matrix:**	Soil vapor

Analyses	ppbv Result	ppbv Limit	ug/M^3 Result	ug/M^3 Limit	Qual	DF	Date Analyzed	CAS#
VOLATILE ORGANICS IN AIR		**TO-15**					Analyst: JJ	
1,1-Dichloroethane	**6.8**	**5.0**	**27.5**	**20.3**		10	9/14/2018	75-34-3
1,1-Dichloroethene	< 5.0	5.0	< 19.9	19.9		10	9/14/2018	75-35-4
1,2-Dichlorobenzene	< 5.0	5.0	< 30.1	30.1		10	9/14/2018	95-50-1
1,2-Dichloroethane	< 5.0	5.0	< 20.3	20.3		10	9/14/2018	107-06-2
2-Butanone (MEK)	< 50	50	< 148	148		10	9/14/2018	78-93-3
Acetone	< 50	50	< 119	119		10	9/14/2018	67-64-1
Benzene	< 5.0	5.0	< 16.0	16.0		10	9/14/2018	71-43-2
Chlorobenzene	< 5.0	5.0	< 23.0	23.0		10	9/14/2018	108-90-7
Chloroform	< 5.0	5.0	< 24.4	24.4		10	9/14/2018	67-66-3
cis-1,2-Dichloroethene	< 5.0	5.0	< 19.8	19.8		10	9/14/2018	156-59-2
Dichlorodifluoromethane(F-12)	**140**	**10**	**692**	**49.5**		10	9/14/2018	75-71-8
Ethylbenzene	< 5.0	5.0	< 21.7	21.7		10	9/14/2018	100-41-4
m&p-Xylene	< 10	10	< 43.4	43.4		10	9/14/2018	179601-23-1
Methylene chloride	< 20	20	< 69.4	69.4		10	9/14/2018	75-09-2
o-Xylene	< 5.0	5.0	< 21.7	21.7		10	9/14/2018	95-47-6
Tetrachloroethene	**29**	**10**	**195**	**67.8**		10	9/14/2018	127-18-4
Tetrahydrofuran	< 20	20	< 59.0	59.0		10	9/14/2018	109-99-9
Toluene	< 5.0	5.0	< 18.9	18.9		10	9/14/2018	108-88-3
trans-1,2-Dichloroethene	< 5.0	5.0	< 19.8	19.8		10	9/14/2018	156-60-5
Trichloroethene	**15**	**5.0**	**77.9**	**26.9**		10	9/14/2018	79-01-6
Trichlorofluoromethane(F-11)	**57**	**5.0**	**323**	**28.1**		10	9/14/2018	75-69-4
Trichlorotrifluoroethane(F-113)	**8.4**	**5.0**	**64.3**	**38.3**		10	9/14/2018	76-13-1
Vinyl chloride	< 5.0	5.0	< 12.8	12.8		10	9/14/2018	75-01-4
Surr: 4-Bromofluorobenzene	92.1	70-130	%REC					

Tentatively Identified Compounds (TIC's)

Difluoroethane	< 100	100	ppbv		T4	10	9/14/2018	

Airtech Environmental Laboratories (AEL) - AZ 0740

4620 E.Elwood St., Suite 13, Phoenix, AZ 85040 480-968-5888 Fax 480-966-1888

Client:	Wood.	**Client Sample ID:**	TSSV-6S-SG-090718
Project:	Cave Creek Landfill	**Project Number:**	14-2017-2034
Lab Order:	18I005	**Collection:**	9/7/2018
Lab ID:	14	**Matrix:**	Soil vapor

Analyses	ppbv Result	ppbv Limit	ug/M^3 Result	ug/M^3 Limit	Qual	DF	Date Analyzed	CAS#
VOLATILE ORGANICS IN AIR		**TO-15**					Analyst: JJ	
1,1-Dichloroethane	< 10	10	< 40.5	40.5		20	9/12/2018	75-34-3
1,1-Dichloroethene	< 10	10	< 39.7	39.7		20	9/12/2018	75-35-4
1,2-Dichlorobenzene	< 10	10	< 60.1	60.1		20	9/12/2018	95-50-1
1,2-Dichloroethane	< 10	10	< 40.5	40.5		20	9/12/2018	107-06-2
2-Butanone (MEK)	< 100	100	< 295	295		20	9/12/2018	78-93-3
Acetone	< 100	100	< 238	238		20	9/12/2018	67-64-1
Benzene	< 10	10	< 31.9	31.9		20	9/12/2018	71-43-2
Chlorobenzene	< 10	10	< 46.0	46.0		20	9/12/2018	108-90-7
Chloroform	**23**	**10**	**110**	**48.8**		20	9/12/2018	67-66-3
cis-1,2-Dichloroethene	< 10	10	< 39.6	39.6		20	9/12/2018	156-59-2
Dichlorodifluoromethane(F-12)	< 20	20	< 99.0	99.0		20	9/12/2018	75-71-8
Ethylbenzene	< 10	10	< 43.4	43.4		20	9/12/2018	100-41-4
m&p-Xylene	< 20	20	< 86.8	86.8		20	9/12/2018	179601-23-1
Methylene chloride	< 40	40	< 139	139		20	9/12/2018	75-09-2
o-Xylene	< 10	10	< 43.4	43.4		20	9/12/2018	95-47-6
Tetrachloroethene	**173**	**20**	**1,170**	**136**		20	9/12/2018	127-18-4
Tetrahydrofuran	< 40	40	< 118	118		20	9/12/2018	109-99-9
Toluene	< 10	10	< 37.7	37.7		20	9/12/2018	108-88-3
trans-1,2-Dichloroethene	< 10	10	< 39.6	39.6		20	9/12/2018	156-60-5
Trichloroethene	**1,970**	**50**	**10,600**	**269**		100	9/14/2018	79-01-6
Trichlorofluoromethane(F-11)	< 10	10	< 56.2	56.2		20	9/12/2018	75-69-4
Trichlorotrifluoroethane(F-113)	**215**	**10**	**1,650**	**77**		20	9/12/2018	76-13-1
Vinyl chloride	< 10	10	< 25.6	25.6		20	9/12/2018	75-01-4
Surr: 4-Bromofluorobenzene	89.6	70-130	%REC					

Tentatively Identified Compounds (TIC's)

Difluoroethane	<	200	200	ppbv		T4	20	9/12/2018

Airtech Environmental Laboratories (AEL) - AZ 0740

4620 E.Elwood St., Suite 13, Phoenix, AZ 85040 480-968-5888 Fax 480-966-1888

Client:	Wood.	**Client Sample ID:**	TSSV-6M-SG-090718
Project:	Cave Creek Landfill	**Project Number:**	14-2017-2034
Lab Order:	18I005	**Collection:**	9/7/2018
Lab ID:	15	**Matrix:**	Soil vapor

Analyses	ppbv Result	ppbv Limit	ug/M^3 Result	ug/M^3 Limit	Qual	DF	Date Analyzed	CAS#
VOLATILE ORGANICS IN AIR		**TO-15**					Analyst: JJ	
1,1-Dichloroethane	< 1.0	1.0	< 4.05	4.05		2	9/17/2018	75-34-3
1,1-Dichloroethene	< 1.0	1.0	< 3.97	3.97		2	9/17/2018	75-35-4
1,2-Dichlorobenzene	< 1.0	1.0	< 6.01	6.01		2	9/17/2018	95-50-1
1,2-Dichloroethane	< 1.0	1.0	< 4.05	4.05		2	9/17/2018	107-06-2
2-Butanone (MEK)	< 10	10	< 29.5	29.5		2	9/17/2018	78-93-3
Acetone	**15**	**10**	**35.9**	**23.8**		2	9/17/2018	67-64-1
Benzene	< 1.0	1.0	< 3.19	3.19		2	9/17/2018	71-43-2
Chlorobenzene	< 1.0	1.0	< 4.60	4.60		2	9/17/2018	108-90-7
Chloroform	< 1.0	1.0	< 4.88	4.88		2	9/17/2018	67-66-3
cis-1,2-Dichloroethene	< 1.0	1.0	< 3.96	3.96		2	9/17/2018	156-59-2
Dichlorodifluoromethane(F-12)	< 2.0	2.0	< 9.90	9.90		2	9/17/2018	75-71-8
Ethylbenzene	< 1.0	1.0	< 4.34	4.34		2	9/17/2018	100-41-4
m&p-Xylene	< 2.0	2.0	< 8.68	8.68		2	9/17/2018	179601-23-1
Methylene chloride	< 4.0	4.0	< 13.9	13.9		2	9/17/2018	75-09-2
o-Xylene	< 1.0	1.0	< 4.34	4.34		2	9/17/2018	95-47-6
Tetrachloroethene	< 2.0	2.0	< 13.6	13.6		2	9/17/2018	127-18-4
Tetrahydrofuran	< 4.0	4.0	< 11.8	11.8		2	9/17/2018	109-99-9
Toluene	< 1.0	1.0	< 3.77	3.77		2	9/17/2018	108-88-3
trans-1,2-Dichloroethene	< 1.0	1.0	< 3.96	3.96		2	9/17/2018	156-60-5
Trichloroethene	< 1.0	1.0	< 5.37	5.37		2	9/17/2018	79-01-6
Trichlorofluoromethane(F-11)	< 1.0	1.0	< 5.62	5.62		2	9/17/2018	75-69-4
Trichlorotrifluoroethane(F-113)	< 1.0	1.0	< 7.66	7.66		2	9/17/2018	76-13-1
Vinyl chloride	< 1.0	1.0	< 2.56	2.56		2	9/17/2018	75-01-4
Surr: 4-Bromofluorobenzene	92.8	70-130	%REC					

Tentatively Identified Compounds (TIC's)

Difluoroethane	< 20	20	ppbv		T4	2	9/17/2018

Airtech Environmental Laboratories (AEL) - AZ 0740

4620 E.Elwood St., Suite 13, Phoenix, AZ 85040 480-968-5888 Fax 480-966-1888

Client:	Wood.	**Client Sample ID:**	TSSV-6D-SG-090718
Project:	Cave Creek Landfill	**Project Number:**	14-2017-2034
Lab Order:	18I005	**Collection:**	9/7/2018
Lab ID:	16	**Matrix:**	Soil vapor

Analyses	ppbv Result	ppbv Limit	ug/M^3 Result	ug/M^3 Limit	Qual	DF	Date Analyzed	CAS#
VOLATILE ORGANICS IN AIR	**TO-15**						Analyst: JJ	
1,1-Dichloroethane	< 50	50	< 203	203		100	9/12/2018	75-34-3
1,1-Dichloroethene	< 50	50	< 199	199		100	9/12/2018	75-35-4
1,2-Dichlorobenzene	< 50	50	< 301	301		100	9/12/2018	95-50-1
1,2-Dichloroethane	< 50	50	< 203	203		100	9/12/2018	107-06-2
2-Butanone (MEK)	< 500	500	< 1,480	1,480		100	9/12/2018	78-93-3
Acetone	< 500	500	< 1,190	1,190		100	9/12/2018	67-64-1
Benzene	< 50	50	< 160	160		100	9/12/2018	71-43-2
Chlorobenzene	**82**	**50**	**377**	**230**		100	9/12/2018	108-90-7
Chloroform	**304**	**50**	**1,480**	**244**		100	9/12/2018	67-66-3
cis-1,2-Dichloroethene	**1,570**	**50**	**6,220**	**198**		100	9/12/2018	156-59-2
Dichlorodifluoromethane(F-12)	< 100	100	< 495	495		100	9/12/2018	75-71-8
Ethylbenzene	< 50	50	< 217	217		100	9/12/2018	100-41-4
m&p-Xylene	< 100	100	< 434	434		100	9/12/2018	179601-23-1
Methylene chloride	**237**	**200**	**822**	**694**		100	9/12/2018	75-09-2
o-Xylene	< 50	50	< 217	217		100	9/12/2018	95-47-6
Tetrachloroethene	**497**	**100**	**3,370**	**678**		100	9/12/2018	127-18-4
Tetrahydrofuran	< 200	200	< 590	590		100	9/12/2018	109-99-9
Toluene	< 50	50	< 189	189		100	9/12/2018	108-88-3
trans-1,2-Dichloroethene	< 50	50	< 198	198		100	9/12/2018	156-60-5
Trichloroethene	**7,590**	**250**	**40,800**	**1,340**		500	9/14/2018	79-01-6
Trichlorofluoromethane(F-11)	< 50	50	< 281	281		100	9/12/2018	75-69-4
Trichlorotrifluoroethane(F-113)	**1,250**	**50**	**9,580**	**383**		100	9/12/2018	76-13-1
Vinyl chloride	< 50	50	< 128	128		100	9/12/2018	75-01-4
Surr: 4-Bromofluorobenzene	88.9	70-130	%REC					

Tentatively Identified Compounds (TIC's)

Difluoroethane	< 1,000	1,000	ppbv		T4	100	9/12/2018

Airtech Environmental Laboratories (AEL) - AZ 0740

4620 E.Elwood St., Suite 13, Phoenix, AZ 85040 480-968-5888 Fax 480-966-1888

Client:	Wood.	**Client Sample ID:**	TSSV-7S-SG-090718
Project:	Cave Creek Landfill	**Project Number:**	14-2017-2034
Lab Order:	18I005	**Collection:**	9/7/2018
Lab ID:	17	**Matrix:**	Soil vapor

Analyses	ppbv Result	ppbv Limit	ug/M^3 Result	ug/M^3 Limit	Qual	DF	Date Analyzed	CAS#
VOLATILE ORGANICS IN AIR		**TO-15**					Analyst: JJ	
1,1-Dichloroethane	< 10	10	< 40.5	40.5		20	9/17/2018	75-34-3
1,1-Dichloroethene	< 10	10	< 39.7	39.7		20	9/17/2018	75-35-4
1,2-Dichlorobenzene	< 10	10	< 60.1	60.1		20	9/17/2018	95-50-1
1,2-Dichloroethane	< 10	10	< 40.5	40.5		20	9/17/2018	107-06-2
2-Butanone (MEK)	< 100	100	< 295	295		20	9/17/2018	78-93-3
Acetone	< 100	100	< 238	238		20	9/17/2018	67-64-1
Benzene	< 10	10	< 31.9	31.9		20	9/17/2018	71-43-2
Chlorobenzene	< 10	10	< 46.0	46.0		20	9/17/2018	108-90-7
Chloroform	**16**	**10**	**79.1**	**48.8**		20	9/17/2018	67-66-3
cis-1,2-Dichloroethene	< 10	10	< 39.6	39.6		20	9/17/2018	156-59-2
Dichlorodifluoromethane(F-12)	< 20	20	< 99.0	99.0		20	9/17/2018	75-71-8
Ethylbenzene	< 10	10	< 43.4	43.4		20	9/17/2018	100-41-4
m&p-Xylene	< 20	20	< 86.8	86.8		20	9/17/2018	179601-23-1
Methylene chloride	< 40	40	< 139	139		20	9/17/2018	75-09-2
o-Xylene	< 10	10	< 43.4	43.4		20	9/17/2018	95-47-6
Tetrachloroethene	**43**	**20**	**289**	**136**		20	9/17/2018	127-18-4
Tetrahydrofuran	< 40	40	< 118	118		20	9/17/2018	109-99-9
Toluene	< 10	10	< 37.7	37.7		20	9/17/2018	108-88-3
trans-1,2-Dichloroethene	< 10	10	< 39.6	39.6		20	9/17/2018	156-60-5
Trichloroethene	**367**	**10**	**1,970**	**53.7**		20	9/17/2018	79-01-6
Trichlorofluoromethane(F-11)	**76**	**10**	**425**	**56.2**		20	9/17/2018	75-69-4
Trichlorotrifluoroethane(F-113)	**12**	**10**	**88.9**	**76.6**		20	9/17/2018	76-13-1
Vinyl chloride	< 10	10	< 25.6	25.6		20	9/17/2018	75-01-4
Surr: 4-Bromofluorobenzene	93.4	70-130	%REC					

Tentatively Identified Compounds (TIC's)

Difluoroethane	< 200	200	ppbv		T4	20	9/17/2018

Airtech Environmental Laboratories (AEL) - AZ 0740

4620 E.Elwood St., Suite 13, Phoenix, AZ 85040 480-968-5888 Fax 480-966-1888

Client:	Wood.	**Client Sample ID:**	TSSV-7M-SG-090718
Project:	Cave Creek Landfill	**Project Number:**	14-2017-2034
Lab Order:	18I005	**Collection:**	9/7/2018
Lab ID:	18	**Matrix:**	Soil vapor

Analyses	ppbv Result	ppbv Limit	ug/M^3 Result	ug/M^3 Limit	Qual	DF	Date Analyzed	CAS#
VOLATILE ORGANICS IN AIR		**TO-15**					Analyst: JJ	
1,1-Dichloroethane	< 50	50	< 203	203		100	9/13/2018	75-34-3
1,1-Dichloroethene	**1,510**	**50**	**6,000**	**199**		100	9/13/2018	75-35-4
1,2-Dichlorobenzene	< 50	50	< 301	301		100	9/13/2018	95-50-1
1,2-Dichloroethane	< 50	50	< 203	203		100	9/13/2018	107-06-2
2-Butanone (MEK)	< 500	500	< 1,480	1,480		100	9/13/2018	78-93-3
Acetone	< 500	500	< 1,190	1,190		100	9/13/2018	67-64-1
Benzene	< 50	50	< 160	160		100	9/13/2018	71-43-2
Chlorobenzene	**239**	**50**	**1,100**	**230**		100	9/13/2018	108-90-7
Chloroform	< 50	50	< 244	244		100	9/13/2018	67-66-3
cis-1,2-Dichloroethene	**96**	**50**	**380**	**198**		100	9/13/2018	156-59-2
Dichlorodifluoromethane(F-12)	**159**	**100**	**787**	**495**		100	9/13/2018	75-71-8
Ethylbenzene	< 50	50	< 217	217		100	9/13/2018	100-41-4
m&p-Xylene	< 100	100	< 434	434		100	9/13/2018	179601-23-1
Methylene chloride	< 200	200	< 694	694		100	9/13/2018	75-09-2
o-Xylene	< 50	50	< 217	217		100	9/13/2018	95-47-6
Tetrachloroethene	**331**	**100**	**2,240**	**678**		100	9/13/2018	127-18-4
Tetrahydrofuran	< 200	200	< 590	590		100	9/13/2018	109-99-9
Toluene	< 50	50	< 189	189		100	9/13/2018	108-88-3
trans-1,2-Dichloroethene	< 50	50	< 198	198		100	9/13/2018	156-60-5
Trichloroethene	**1,620**	**50**	**8,700**	**269**		100	9/13/2018	79-01-6
Trichlorofluoromethane(F-11)	**75**	**50**	**422**	**281**		100	9/13/2018	75-69-4
Trichlorotrifluoroethane(F-113)	**59**	**50**	**452**	**383**		100	9/13/2018	76-13-1
Vinyl chloride	< 50	50	< 128	128		100	9/13/2018	75-01-4
Surr: 4-Bromofluorobenzene	92.7	70-130	%REC					

Tentatively Identified Compounds (TIC's)

Difluoroethane	< 1,000	1,000	ppbv		T4	100	9/13/2018	

Airtech Environmental Laboratories (AEL) - AZ 0740

4620 E.Elwood St., Suite 13, Phoenix, AZ 85040 480-968-5888 Fax 480-966-1888

Client:	Wood.	**Client Sample ID:**	N/A
Project:	Cave Creek Landfill	**Project Number:**	14-2017-2034
Lab Order:	18I005	**Collection:**	N/A
Lab ID:	Blank	**Matrix:**	Nitrogen

Method QC Data

Batch: MS010912 Analyst: JJ

Analyses	ppbv Result	ppbv Limit	ug/M^3 Result	ug/M^3 Limit	Qual	DF	Date Analyzed	CAS#
VOLATILE ORGANICS IN AIR		**TO-15**					Analyst: JJ	
1,1-Dichloroethane	< 0.5	0.5	< 2.03	2.03		1	9/12/2018	75-34-3
1,1-Dichloroethene	< 0.5	0.5	< 1.99	1.99		1	9/12/2018	75-35-4
1,2-Dichlorobenzene	< 0.5	0.5	< 3.01	3.01		1	9/12/2018	95-50-1
1,2-Dichloroethane	< 0.5	0.5	< 2.03	2.03		1	9/12/2018	107-06-2
2-Butanone (MEK)	< 5.0	5.0	< 14.8	14.8		1	9/12/2018	78-93-3
Acetone	< 5.0	5.0	< 11.9	11.9		1	9/12/2018	67-64-1
Benzene	< 0.5	0.5	< 1.60	1.60		1	9/12/2018	71-43-2
Chlorobenzene	< 0.5	0.5	< 2.30	2.30		1	9/12/2018	108-90-7
Chloroform	< 0.5	0.5	< 2.44	2.44		1	9/12/2018	67-66-3
cis-1,2-Dichloroethene	< 0.5	0.5	< 1.98	1.98		1	9/12/2018	156-59-2
Dichlorodifluoromethane(F-12)	< 1.0	1.0	< 4.95	4.95		1	9/12/2018	75-71-8
Ethylbenzene	< 0.5	0.5	< 2.17	2.17		1	9/12/2018	100-41-4
m&p-Xylene	< 1.0	1.0	< 4.34	4.34		1	9/12/2018	179601-23-1
Methylene chloride	< 2.0	2.0	< 6.94	6.94		1	9/12/2018	75-09-2
o-Xylene	< 0.5	0.5	< 2.17	2.17		1	9/12/2018	95-47-6
Tetrachloroethene	< 1.0	1.0	< 6.78	6.78		1	9/12/2018	127-18-4
Tetrahydrofuran	< 2.0	2.0	< 5.90	5.90		1	9/12/2018	109-99-9
Toluene	< 0.5	0.5	< 1.89	1.89		1	9/12/2018	108-88-3
trans-1,2-Dichloroethene	< 0.5	0.5	< 1.98	1.98		1	9/12/2018	156-60-5
Trichloroethene	< 0.5	0.5	< 2.69	2.69		1	9/12/2018	79-01-6
Trichlorofluoromethane(F-11)	< 0.5	0.5	< 2.81	2.81		1	9/12/2018	75-69-4
Trichlorotrifluoroethane(F-113)	< 0.5	0.5	< 3.83	3.83		1	9/12/2018	76-13-1
Vinyl chloride	< 0.5	0.5	< 1.28	1.28		1	9/12/2018	75-01-4
Surr: 4-Bromofluorobenzene	89.8	70-130	%REC					

Airtech Environmental Laboratories (AEL) - AZ 0740

4620 E.Elwood St., Suite 13, Phoenix, AZ 85040 480-968-5888 Fax 480-966-1888

Client:	Wood.	**Client Sample ID:**	N/A
Project:	Cave Creek Landfill	**Project Number:**	14-2017-2034
Lab Order:	18I005	**Collection:**	N/A
Lab ID:	LCS/LCSD	**Matrix:**	Nitrogen

Method QC Data

Date Analyzed: 9/12/2018 Batch: MS010912 Analyst: JJ

Analyses	LCS Result	LCS %REC	LCSD Result	LCSD %REC	T.V.	%RPD	Unit	Qualifier LCS	Qualifier LCSD	Qualifier RPD
VOLATILE ORGANICS IN AIR	**TO-15**							70-130%		<25%
Dichlorodifluoromethane(F-12)	8.7	86.5	9.0	89.6	10.0	3.5	ppbv			
Vinyl Chloride	8.0	80.2	7.9	79.0	10.0	1.5	ppbv			
Trichlorofluoromethane (F-11)	8.3	83.3	7.9	79.2	10.0	5.0	ppbv			
Acetone	7.0	70.0	7.5	74.5	10.0	6.2	ppbv			
1,1-Dichloroethene	7.9	78.9	7.4	73.7	10.0	6.8	ppbv			
Trichlorotrifluoroethane (F-113)	8.3	83.4	7.9	78.5	10.0	6.1	ppbv			
Methylene Chloride	7.9	78.7	7.3	72.6	10.0	8.1	ppbv			
trans-1,2-Dichloroethene	8.1	81.0	7.6	76.2	10.0	6.1	ppbv			
1,1-Dichloroethane	8.0	79.6	7.4	74.1	10.0	7.2	ppbv			
2-Butanone (MEK)	8.3	82.9	9.1	90.7	10.0	9.0	ppbv			
cis-1,2-Dichloroethene	8.6	85.8	7.9	79.2	10.0	8.0	ppbv			
Chloroform	7.8	77.8	7.4	73.5	10.0	5.7	ppbv			
Tetrahydrofuran	7.2	72.2	7.3	73.1	10.0	1.2	ppbv			
1,2-Dichloroethane	7.6	75.5	7.3	73.0	10.0	3.4	ppbv			
Benzene	8.0	80.3	7.6	76.2	10.0	5.2	ppbv			
Trichloroethene	9.1	90.5	8.6	86.0	10.0	5.1	ppbv			
Toluene	10.3	103	10.8	108	10.0	4.7	ppbv			
Tetrachloroethene	9.7	97.0	9.5	94.6	10.0	2.5	ppbv			
Chlorobenzene	9.4	94.4	9.8	97.7	10.0	3.4	ppbv			
Ethylbenzene	9.6	95.7	10.3	103	10.0	7.3	ppbv			
m&p-Xylene	19.5	97.3	20.2	101	20.0	3.6	ppbv			
o-Xylene	9.4	94.3	9.8	98.3	10.0	4.2	ppbv			
1,2-Dichlorobenzene	11.0	110	11.5	115	10.0	3.9	ppbv			
Surr: 4-Bromofluorobenzene	9.7	97.1	10.1	101		4.2	%REC			
		70-130%		70-130%						

Airtech Environmental Laboratories (AEL) - AZ 0740

4620 E.Elwood St., Suite 13, Phoenix, AZ 85040 480-968-5888 Fax 480-966-1888

Client:	Wood.	**Client Sample ID:**	N/A
Project:	Cave Creek Landfill	**Project Number:**	14-2017-2034
Lab Order:	18I005	**Collection:**	N/A
Lab ID:	Blank	**Matrix:**	Nitrogen

Method QC Data

Batch: MS010914 Analyst: JJ

Analyses	ppbv Result	ppbv Limit	ug/M^3 Result	ug/M^3 Limit	Qual	DF	Date Analyzed	CAS#
VOLATILE ORGANICS IN AIR		**TO-15**					Analyst: JJ	
1,1-Dichloroethane	< 0.5	0.5	< 2.03	2.03		1	9/14/2018	75-34-3
1,1-Dichloroethene	< 0.5	0.5	< 1.99	1.99		1	9/14/2018	75-35-4
1,2-Dichlorobenzene	< 0.5	0.5	< 3.01	3.01		1	9/14/2018	95-50-1
1,2-Dichloroethane	< 0.5	0.5	< 2.03	2.03		1	9/14/2018	107-06-2
2-Butanone (MEK)	< 5.0	5.0	< 14.8	14.8		1	9/14/2018	78-93-3
Acetone	< 5.0	5.0	< 11.9	11.9		1	9/14/2018	67-64-1
Benzene	< 0.5	0.5	< 1.60	1.60		1	9/14/2018	71-43-2
Chlorobenzene	< 0.5	0.5	< 2.30	2.30		1	9/14/2018	108-90-7
Chloroform	< 0.5	0.5	< 2.44	2.44		1	9/14/2018	67-66-3
cis-1,2-Dichloroethene	< 0.5	0.5	< 1.98	1.98		1	9/14/2018	156-59-2
Dichlorodifluoromethane(F-12)	< 1.0	1.0	< 4.95	4.95		1	9/14/2018	75-71-8
Ethylbenzene	< 0.5	0.5	< 2.17	2.17		1	9/14/2018	100-41-4
m&p-Xylene	< 1.0	1.0	< 4.34	4.34		1	9/14/2018	179601-23-1
Methylene chloride	< 2.0	2.0	< 6.94	6.94		1	9/14/2018	75-09-2
o-Xylene	< 0.5	0.5	< 2.17	2.17		1	9/14/2018	95-47-6
Tetrachloroethene	< 1.0	1.0	< 6.78	6.78		1	9/14/2018	127-18-4
Tetrahydrofuran	< 2.0	2.0	< 5.90	5.90		1	9/14/2018	109-99-9
Toluene	< 0.5	0.5	< 1.89	1.89		1	9/14/2018	108-88-3
trans-1,2-Dichloroethene	< 0.5	0.5	< 1.98	1.98		1	9/14/2018	156-60-5
Trichloroethene	< 0.5	0.5	< 2.69	2.69		1	9/14/2018	79-01-6
Trichlorofluoromethane(F-11)	< 0.5	0.5	< 2.81	2.81		1	9/14/2018	75-69-4
Trichlorotrifluoroethane(F-113)	< 0.5	0.5	< 3.83	3.83		1	9/14/2018	76-13-1
Vinyl chloride	< 0.5	0.5	< 1.28	1.28		1	9/14/2018	75-01-4
Surr: 4-Bromofluorobenzene	90.4	70-130	%REC					

Airtech Environmental Laboratories (AEL) - AZ 0740

4620 E.Elwood St., Suite 13, Phoenix, AZ 85040 480-968-5888 Fax 480-966-1888

Client:	Wood.	**Client Sample ID:**	N/A
Project:	Cave Creek Landfill	**Project Number:**	14-2017-2034
Lab Order:	18I005	**Collection:**	N/A
Lab ID:	LCS/LCSD	**Matrix:**	Nitrogen

Method QC Data

Date Analyzed: 9/14/2018 Batch: MS010914 Analyst: JJ

Analyses	LCS Result	LCS %REC	LCSD Result	LCSD %REC	T.V.	%RPD	Unit	Qualifier LCS	Qualifier LCSD	Qualifier RPD
VOLATILE ORGANICS IN AIR	**TO-15**							70-130%		<25%
Dichlorodifluoromethane(F-12)	8.9	89.2	8.3	83.4	10.0	6.7	ppbv			
Vinyl Chloride	8.1	81.4	7.2	72.4	10.0	11.7	ppbv			
Trichlorofluoromethane (F-11)	7.8	78.4	7.8	78.2	10.0	0.3	ppbv			
Acetone	7.4	73.5	7.7	76.5	10.0	4.0	ppbv			
1,1-Dichloroethene	7.5	75.3	7.4	73.9	10.0	1.9	ppbv			
Trichlorotrifluoroethane (F-113)	8.0	80.3	8.1	81.3	10.0	1.2	ppbv			
Methylene Chloride	7.1	70.8	7.1	70.6	10.0	0.3	ppbv			
trans-1,2-Dichloroethene	8.1	80.9	8.2	81.9	10.0	1.2	ppbv			
1,1-Dichloroethane	7.5	75.4	7.8	78.3	10.0	3.8	ppbv			
2-Butanone (MEK)	9.2	91.7	10.1	100.7	10.0	9.4	ppbv			
cis-1,2-Dichloroethene	8.3	83.3	8.8	87.7	10.0	5.1	ppbv			
Chloroform	7.4	74.3	8.0	80.2	10.0	7.6	ppbv			
Tetrahydrofuran	7.7	77.0	8.5	84.7	10.0	9.5	ppbv			
1,2-Dichloroethane	7.4	74.3	8.0	80.4	10.0	7.9	ppbv			
Benzene	8.0	80.2	8.7	87.3	10.0	8.5	ppbv			
Trichloroethene	9.2	91.6	9.5	95.2	10.0	3.9	ppbv			
Toluene	11.1	111	10.9	109	10.0	1.6	ppbv			
Tetrachloroethene	9.9	98.8	10.9	109	10.0	9.6	ppbv			
Chlorobenzene	9.8	98.2	10.2	102	10.0	3.7	ppbv			
Ethylbenzene	11.3	113	11.9	119	10.0	5.5	ppbv			
m&p-Xylene	21.5	108	23.6	118	20.0	9.4	ppbv			
o-Xylene	10.2	102	11.3	113	10.0	10.7	ppbv			
1,2-Dichlorobenzene	12.4	124	12.5	125	10.0	0.5	ppbv			
Surr: 4-Bromofluorobenzene	9.9	99.1	9.4	94.0		5.3	%REC			
		70-130%		70-130%						

Airtech Environmental Laboratories (AEL) - AZ 0740

4620 E.Elwood St., Suite 13, Phoenix, AZ 85040 480-968-5888 Fax 480-966-1888

Client:	Wood.	**Client Sample ID:**	N/A
Project:	Cave Creek Landfill	**Project Number:**	14-2017-2034
Lab Order:	18I005	**Collection:**	N/A
Lab ID:	Blank	**Matrix:**	Nitrogen

Method QC Data

Batch: MS010917 Analyst: JJ

Analyses	ppbv Result	ppbv Limit	ug/M^3 Result	ug/M^3 Limit	Qual	DF	Date Analyzed	CAS#
VOLATILE ORGANICS IN AIR		**TO-15**					Analyst: JJ	
1,1-Dichloroethane	< 0.5	0.5	< 2.03	2.03		1	9/17/2018	75-34-3
1,1-Dichloroethene	< 0.5	0.5	< 1.99	1.99		1	9/17/2018	75-35-4
1,2-Dichlorobenzene	< 0.5	0.5	< 3.01	3.01		1	9/17/2018	95-50-1
1,2-Dichloroethane	< 0.5	0.5	< 2.03	2.03		1	9/17/2018	107-06-2
2-Butanone (MEK)	< 5.0	5.0	< 14.8	14.8		1	9/17/2018	78-93-3
Acetone	< 5.0	5.0	< 11.9	11.9		1	9/17/2018	67-64-1
Benzene	< 0.5	0.5	< 1.60	1.60		1	9/17/2018	71-43-2
Chlorobenzene	< 0.5	0.5	< 2.30	2.30		1	9/17/2018	108-90-7
Chloroform	< 0.5	0.5	< 2.44	2.44		1	9/17/2018	67-66-3
cis-1,2-Dichloroethene	< 0.5	0.5	< 1.98	1.98		1	9/17/2018	156-59-2
Dichlorodifluoromethane(F-12)	< 1.0	1.0	< 4.95	4.95		1	9/17/2018	75-71-8
Ethylbenzene	< 0.5	0.5	< 2.17	2.17		1	9/17/2018	100-41-4
m&p-Xylene	< 1.0	1.0	< 4.34	4.34		1	9/17/2018	179601-23-1
Methylene chloride	< 2.0	2.0	< 6.94	6.94		1	9/17/2018	75-09-2
o-Xylene	< 0.5	0.5	< 2.17	2.17		1	9/17/2018	95-47-6
Tetrachloroethene	< 1.0	1.0	< 6.78	6.78		1	9/17/2018	127-18-4
Tetrahydrofuran	< 2.0	2.0	< 5.90	5.90		1	9/17/2018	109-99-9
Toluene	< 0.5	0.5	< 1.89	1.89		1	9/17/2018	108-88-3
trans-1,2-Dichloroethene	< 0.5	0.5	< 1.98	1.98		1	9/17/2018	156-60-5
Trichloroethene	< 0.5	0.5	< 2.69	2.69		1	9/17/2018	79-01-6
Trichlorofluoromethane(F-11)	< 0.5	0.5	< 2.81	2.81		1	9/17/2018	75-69-4
Trichlorotrifluoroethane(F-113)	< 0.5	0.5	< 3.83	3.83		1	9/17/2018	76-13-1
Vinyl chloride	< 0.5	0.5	< 1.28	1.28		1	9/17/2018	75-01-4
Surr: 4-Bromofluorobenzene	86.5	70-130	%REC					

Airtech Environmental Laboratories (AEL) - AZ 0740

4620 E.Elwood St., Suite 13, Phoenix, AZ 85040 480-968-5888 Fax 480-966-1888

Client:	Wood.	**Client Sample ID:**	N/A
Project:	Cave Creek Landfill	**Project Number:**	14-2017-2034
Lab Order:	18I005	**Collection:**	N/A
Lab ID:	LCS/LCSD	**Matrix:**	Nitrogen

Method QC Data

Date Analyzed: 9/17/2018 Batch: MS010917 Analyst: JJ

Analyses	LCS Result	LCS %REC	LCSD Result	LCSD %REC	T.V.	%RPD	Unit	Qualifier LCS	Qualifier LCSD	Qualifier RPD
VOLATILE ORGANICS IN AIR	**TO-15**							70-130%		<25%
Dichlorodifluoromethane(F-12)	8.3	83.2	8.2	81.5	10.0	2.1	ppbv			
Vinyl Chloride	8.8	88.0	8.3	82.9	10.0	6.0	ppbv			
Trichlorofluoromethane (F-11)	9.2	91.7	8.8	88.3	10.0	3.8	ppbv			
Acetone	8.3	82.7	7.9	78.6	10.0	5.1	ppbv			
1,1-Dichloroethene	8.4	84.3	8.1	81.4	10.0	3.5	ppbv			
Trichlorotrifluoroethane (F-113)	9.5	94.6	9.2	91.7	10.0	3.1	ppbv			
Methylene Chloride	8.3	82.9	7.7	76.7	10.0	7.8	ppbv			
trans-1,2-Dichloroethene	9.3	93.1	9.1	90.6	10.0	2.7	ppbv			
1,1-Dichloroethane	8.6	85.9	8.2	82.2	10.0	4.4	ppbv			
2-Butanone (MEK)	8.7	87.2	8.7	86.6	10.0	0.7	ppbv			
cis-1,2-Dichloroethene	9.7	97.0	9.6	95.7	10.0	1.3	ppbv			
Chloroform	8.7	87.1	8.4	83.5	10.0	4.2	ppbv			
Tetrahydrofuran	7.4	74.0	7.0	70.0	10.0	5.6	ppbv			
1,2-Dichloroethane	8.1	81.2	7.8	78.0	10.0	4.0	ppbv			
Benzene	8.8	88.3	8.7	86.7	10.0	1.8	ppbv			
Trichloroethene	10.5	105	9.9	98.9	10.0	5.7	ppbv			
Toluene	10.1	101	9.7	97.3	10.0	4.1	ppbv			
Tetrachloroethene	11.0	110	10.5	105	10.0	4.8	ppbv			
Chlorobenzene	10.2	102	9.8	98.0	10.0	4.4	ppbv			
Ethylbenzene	11.5	115	10.8	108	10.0	6.8	ppbv			
m&p-Xylene	23.2	116	21.5	108	20.0	7.6	ppbv			
o-Xylene	11.1	111	10.4	104	10.0	6.8	ppbv			
1,2-Dichlorobenzene	12.8	128	11.7	117	10.0	8.7	ppbv			
Surr: 4-Bromofluorobenzene	9.7	96.6	9.6	95.7		0.9	%REC			
		70-130%		70-130%						

Airtech Environmental Laboratories (AEL) - AZ 0740

4620 E.Elwood St., Suite 13, Phoenix, AZ 85040 480-968-5888 Fax 480-966-1888

Client:	Wood.	**Client Sample ID:**	NA
Project:	Cave Creek Landfill	**Project Number:**	14-2017-2034
Lab Order:	18I005	**Collection:**	NA
Lab ID:	Standards	**Matrix:**	Nitrogen

AEL ID#	STD Name	Vendor	SGI Order#	Description	CONC.	Accuracy	Exp.Date
S-180620-03	Stock	Spectra Gases	116447993	TO-14 39 Analytes	1.0 ppmv	± 5%	6/25/2019
S-180620-02	Stock	Spectra Gases	116447993	TO-15 25 Analytes	1.0 ppmv	± 5%	6/22/2019
S-180620-01	Stock	Spectra Gases	116447993	15 Additional Compounds	1.0 ppmv	± 5%	6/20/2019
S-171019-01	Stock	Spectra Gases	114560630	TO-15 IS 4 Compounds	1.0 ppmv	± 5%	10/19/2018
A-180827-02	Working Std	AEL Dilution		TO-15 74 Analytes	10 ppbv	± 5%	11/27/2018
A-180913-01	Working Std	AEL Dilution		TO-15 74 Analytes	10 ppbv	± 5%	12/13/2018
A-180910-01	Working IS	AEL Dilution		TO-15 IS 4 Compounds	50 ppbv	± 5%	10/19/2018

Airtech Environmental Laboratories (AEL)

Chain of Custody

4620 E.Elwood Street, Suite 13, Phoenix, AZ 85040 480-968-5888 (phone) 480-966-1888 (fax)

Customer : Wood.	Page 1 of 2		AEL Lab #
Address: 4600 East Washington Street, Suite #600	Sampler: Eric Miller	Phone: (602) 300-8313	18I005
	Project Name: Cave Creek Landfill	Project Number: 14-2017-2034	
City, State, Zip: Phoenix, AZ 85034	Project location: Cave Creek, AZ		
Contact: Natalie Chrisman	P.O. Number:		
Phone: (602) 733-6000 Fax: (602) 733-6100	Fax Results: Y N		
E-Mail Address: Natalie.Chrisman@amecfw.com	E-Mail Results: (Y) N		

Sample Receipt

Temperature_____ °C
Custody Seals: Yes_____ No_____
Custody Seals Intact: Yes_____ No_____
Total # of Containers:_____

Turn Around Request

_____ 24 Hours _____ 48 Hours
_____ 72 Hours
_____ 5 working Day
X Standard 10 Working Days

Sample Type

SVE: soil vapor extraction
A: ambient air
I: indoor air
S: soil vapor
W: water
GW: ground water
WW: waste water

Analyses Requested

Sample Information

AEL Lab #	Serial # Canister	Serial # Grab	Canister (L) or bag	Grab (Min)	Client's Sample Identification	Sampled Date	Sampled Time	Sample Type	Number of Containers	TO-15 full list (short list)	TO-15 TPH(GRO)	TO-15 Selet List	8260B AZ Vapor full list	8260B Vapor select list	8015 GRO	8260B Water			DFA tracer cmpd. as TIC
01	E2373	013	6 (1) bag	(1) 2 5	MW-10-SG-090518	9.5.18	1116	S	1	6									6
02	1841	041	6 (1) bag	(1) 2 5	MW-10-S-SG-090518	↓	1132	↓	↓	6									6
03	1815	164	6 (1) bag	(1) 2 5	MW-10M-SG-090518	↓	1156	↓	↓	6									6
04	1801	048	6 (1) bag	(1) 2 5	MW-10D-SG-090518	↓	1216	↓	↓	6									6
05	E2282	009	6 (1) bag	(1) 2 5	MW-09-SG-090618	9.6.18	812	↓	↓	6									6
06	1810	198	6 (1) bag	(1) 2 5	DUP01-090618	↓	820	↓	↓	6									6
07	E2395	010	6 (1) bag	(1) 2 5	MW-09S-SG-090618	↓	830	↓	↓	6									6
08	E2392	037	6 (1) bag	(1) 2 5	MW-09M-SG-090618	↓	856	↓	↓	6									6
09	E2357	143	6 (1) bag	(1) 2 5	MW-09D-SG-090618	↓	916	↓	↓	6									6
10	E2385	057	6 (1) bag	(1) 2 5	TSSV-3D-SG-090618	↓	1041	↓	↓	6									6

Instructions / Special Requirements:

Date:	Time:	Samples Relinquished By:	Received By:
9.7.18	1430	E. Miller	[signature]

Airtech Environmental Laboratories (AEL)

Chain of Custody

4620 E.Elwood Street, Suite 13, Phoenix, AZ 85040 480-968-5888 (phone) 480-966-1888 (fax)

Customer : Wood.	Page 2 of 2		AEL Lab #
Address: 4600 East Washington Street, Suite #600	Sampler: Eric Miller	Phone: (602) 300-8313	181005
	Project Name: Cave Creek Landfill	Project Number: 14-2017-2034	
City, State, Zip: Phoenix, AZ 85034	Project location: Cave Creek, AZ		
Contact: Natalie Chrisman	P.O. Number:		
Phone: (602) 733-6000 Fax: (602) 733-6100	Fax Results: Y N		
E-Mail Address: Natalie.Chrisman@amecfw.com	E-Mail Results: Y N		

Sample Receipt

Temperature_____ °C
Custody Seals: Yes_____ No_____
Custody Seals Intact: Yes_____ No_____
Total # of Containers:_____

Turn Around Request

_____ 24 Hours _____ 48 Hours
_____ 72 Hours
_____ 5 working Day
X Standard 10 Working Days

Sample Type

SVE: soil vapor extraction
A: ambient air
I: indoor air
S: soil vapor
W: water
GW: ground water
WW: waste water

Analyses Requested

Sample Information

AEL Lab #	Serial # Canister	Serial # Grab	Canister (L) or bag	Grab (Min)	Client's Sample Identification	Sampled Date	Sampled Time	Sample Type	Number of Containers	TO-15 ~~full list~~ (SHORT LIST)	TO-15 TPH(GRO)	TO-15 Selet List	8260B AZ Vapor full list	8260B Vapor select list	8015 GRO	8260B Water			DFA tracer cmpd. as TIC
11	E2391	053	6 1 bag	1 2 5	TSSV-3PZ-SG-090618	9.6.18	1122	S	1	X									X
12	E2353	024	6 1 bag	1 2 5	DUP02-090618	↓	1130			X									X
13	E2298	207	6 1 bag	1 2 5	TSSV-5D-090718	9.7.18	921			X									X
	~~1870~~	~~012~~	6 1 bag	1 2 5	~~TSSV-5PZ-090718~~ EM	REMOVED	~~1026~~			X									X
	~~E2356~~	~~195~~	6 1 bag	1 2 5	~~DUP03-090718~~ EM	REMOVED	~~1038~~			X									X
14	E2292	064	6 1 bag	1 2 5	TSSV-6S-SG-090718	9.7.18	1111			X									X
15	E2104	117	6 1 bag	1 2 5	TSSV-6M-SG-090718		1134			X									X
16	E2094	091	6 1 bag	1 2 5	TSSV-6D-SG-090718		1156			X									X
17	E2397	092	6 1 bag	1 2 5	TSSV-7S-SG-090718		1231			X									X
18	E2354	152	6 1 bag	1 2 5	TSSV-7M-SG-090718	↓	1256	↓	↓	X									X

Instructions / Special Requirements:

Date:	Time:	Samples Relinquished By:	Received By:
9.7.18	1430	Eric Miller	[signature]

Airtech Environmental Laboratories (AEL)
4620 E.Elwood St., Suite 13, Phoenix, AZ 85040 480-968-5888 Fax 480-966-1888

Date: September 29, 2018

Client:	Natalie Chrisman	Work Order #:	18I008
Company:	Wood	Project Name:	Cave Creek Landfill
Address:	4600 E Washington St, #600	Project Number:	14-2017-2034
	Phoenix, AZ 85034	Received Date:	9/12/2018

Dear Client:

Airtech Environmental Laboratories received twenty-eight (28) samples for analysis.

All analyses met laboratory QA/QC with any exceptions addressed in the Case Narrative.

If you have any questions or concerns regarding your samples analysis, please contact the laboratory at 480-968-5888

Sincerely,

Yu Min Shi
Technical Director
Airtech Environmental Labs

Arizona ADHS License No. AZ0740

Airtech Environmental Laboratories (AEL)
4620 E.Elwood St., Suite 13, Phoenix, AZ 85040 480-968-5888 Fax 480-966-1888

Date: September 29, 2018

Client:	Natalie Chrisman	Work Order #:	18I008
Company:	Wood	Project Name:	Cave Creek Landfill
Address:	4600 E Washington St, #600	Project Number:	14-2017-2034
	Phoenix, AZ 85034	Received Date:	9/12/2018

SAMPLE SUMMARY

LAB ID	CLIENT ID	METHOD	SAMPLE DATE	SAMPLE TIME
18I008-01	TSSV-7D-SG-090818	TO-15	9/8/2018	821
18I008-02	TSSV-7PZ-SG-090818	TO-15	9/8/2018	922
18I008-03	TSSV-1S-SG-090818	TO-15	9/8/2018	951
18I008-04	TSSV-1M-SG-090818	TO-15	9/8/2018	1013
18I008-05	TSSV-1D-SG-090818	TO-15	9/8/2018	1037
18I008-06	DUP03-090818	TO-15	9/8/2018	1045
18I008-07	TSSV-2S-SG-090818	TO-15	9/8/2018	1116
18I008-08	TSSV-2M-SG-090818	TO-15	9/8/2018	1141
18I008-09	TSSV-2D-SG-090818	TO-15	9/8/2018	1206
18I008-10	TSSV-2PZ-SG-090818	TO-15	9/8/2018	1229
18I008-11	SVE-1S-SG-091018	TO-15	9/10/2018	835
18I008-12	SVE-1M-SG-091018	TO-15	9/10/2018	858
18I008-13	SVE-1D-SG-091018	TO-15	9/10/2018	926
18I008-14	SVE-2S-SG-091018	TO-15	9/10/2018	959
18I008-15	SVE-2M-SG-091018	TO-15	9/10/2018	1026
18I008-16	TSSV-4M-SG-091018	TO-15	9/10/2018	1156
18I008-17	TSSV-4PZ-SG-091018	TO-15	9/10/2018	1236
18I008-18	TSSV-4D-SG-091018	TO-15	9/10/2018	1331
18I008-19	TSSV-5PZ-SG-091218	TO-15	9/12/2018	1046
18I008-20	SVE-3S-SG-091218	TO-15	9/12/2018	1113
18I008-21	SVE-3M-SG-091218	TO-15	9/12/2018	1136
18I008-22	SVE-3-SG-091218	TO-15	9/12/2018	1147
18I008-23	SVE-4S-SG-091218	TO-15	9/12/2018	1215
18I008-24	SVE-4M-SG-091218	TO-15	9/12/2018	1239
18I008-25	SVE-4-SG-091218	TO-15	9/12/2018	1251
18I008-26	SVE-2-SG-091218	TO-15	9/12/2018	1317
18I008-27	TSSV-PW-SG-091218	TO-15	9/12/2018	1338
18I008-28	SVE-1-SG-091218	TO-15	9/12/2018	1357

Airtech Environmental Laboratories (AEL)
4620 E.Elwood St., Suite 13, Phoenix, AZ 85040 480-968-5888 Fax 480-966-1888

Date: September 29, 2018

Client:	Natalie Chrisman	Work Order #:	18I008
Company:	Wood	Project Name:	Cave Creek Landfill
Address:	4600 E Washington St, #600	Project Number:	14-2017-2034
	Phoenix, AZ 85034	Received Date:	09/12/18

Case Narrative

All samples and QC associated with your samples met the quality control objectives.
Data qualifiers in this report are in accordance with ADEQ Data Qualifiers.

T4: Tentatively identified compound. Concentration is estimated and based on the closest internal standard.

Airtech Environmental Laboratories (AEL) - AZ 0740
4620 E.Elwood St., Suite 13, Phoenix, AZ 85040 480-968-5888 Fax 480-966-1888

Client:	Wood	**Client Sample ID:**	N/A
Project:	Cave Creek Landfill	**Project Number:**	14-2017-2034
Lab Order:	18I008	**Collection:**	N/A
Lab ID:	Kits QC	**Matrix:**	Air

		Canister				Grab Sampler	
		Type		Vacuum	Pressure	Type	
	Client	1.0 liter		before sampled	after sampled	1 minute-fill 1.0L canister	
AEL#	ID	SN#	Clean Batch#	Hg inch	psia	SN#	Clean Batch#
18I008-01	TSSV-7D-SG-090818	E2294	1808-10	29.0	13.45	068	1808-06
18I008-02	TSSV-7PZ-SG-090818	E2398	1808-10	29.0	13.14	202	1808-06
18I008-03	TSSV-1S-SG-090818	E2390	1808-10	29.0	13.32	117	1808-06
18I008-04	TSSV-1M-SG-090818	1888	1808-10	29.0	13.16	007	1806-03
18I008-05	TSSV-1D-SG-090818	1867	1808-10	29.0	13.07	047	1806-03
18I008-06	DUP03-090818	1869	1808-10	29.0	13.17	031	1806-03
18I008-07	TSSV-2S-SG-090818	0606	1808-06	29.0	13.20	137	1806-03
18I008-08	TSSV-2M-SG-090818	0265	1808-07	29.0	13.08	201	1806-03
18I008-09	TSSV-2D-SG-090818	E2365	1808-07	29.0	13.24	062	1806-06
18I008-10	TSSV-2PZ-SG-090818	E2088	1808-07	29.0	13.24	193	1806-06
18I008-11	SVE-1S-SG-091018	1842	1807-05	29.0	13.74	023	1807-02
18I008-12	SVE-1M-SG-091018	1805	1807-05	29.0	13.70	144	1807-02
18I008-13	SVE-1D-SG-091018	E2350	1808-07	29.0	13.54	105	1806-06
18I008-14	SVE-2S-SG-091018	1848	1808-07	29.0	13.50	063	1806-06
18I008-15	SVE-2M-SG-091018	1837	1808-07	29.0	13.48	135	1806-06
18I008-16	TSSV-4M-SG-091018	1843	1808-07	29.0	13.42	194	1806-06
18I008-17	TSSV-4PZ-SG-091018	1872	1808-07	29.0	13.18	035	1806-06
18I008-18	TSSV-4D-SG-091018	1829	1808-07	29.0	13.26	191	1806-06
18I008-19	TSSV-5PZ-SG-091218	1873	1808-07	29.0	13.28	014	1806-06
18I008-20	SVE-3S-SG-091218	1870	1808-05	29.0	13.30	012	1806-03

Airtech Environmental Laboratories (AEL) - AZ 0740
4620 E.Elwood St., Suite 13, Phoenix, AZ 85040 480-968-5888 Fax 480-966-1888

Client:	Wood	**Client Sample ID:**	N/A
Project:	Cave Creek Landfill	**Project Number:**	14-2017-2034
Lab Order:	18I008	**Collection:**	N/A
Lab ID:	Kits QC	**Matrix:**	Air

		Canister				Grab Sampler	
		Type		Vacuum	Pressure	Type	
	Client	1.0 liter		before sampled	after sampled	1 minute-fill 1.0L canister	
AEL#	ID	SN#	Clean Batch#	Hg inch	psia	SN#	Clean Batch#
18I008-21	SVE-3M-SG-091218	E2356	1808-05	29.0	13.18	195	1806-03
18I008-22	SVE-3-SG-091218	1796	1807-05	29.0	12.80	065	1807-02
18I008-23	SVE-4S-SG-091218	E2285	1808-04	29.0	13.38	021	1807-02
18I008-24	SVE-4M-SG-091218	E2363	1808-04	29.0	13.24	123	1807-02
18I008-25	SVE-4-SG-091218	E2361	1808-04	29.0	12.67	030	1807-02
18I008-26	SVE-2-SG-091218	E2283	1808-04	29.0	12.30	086	1807-02
18I008-27	TSSV-PW-SG-091218	E2281	1808-04	29.0	12.06	158	1807-02
18I008-28	SVE-1-SG-091218	E2288	1808-04	29.0	12.42	196	1807-02

Airtech Environmental Laboratories (AEL) - AZ 0740

4620 E.Elwood St., Suite 13, Phoenix, AZ 85040 480-968-5888 Fax 480-966-1888

Client:	Wood	**Client Sample ID:**	TSSV-7D-SG-090818
Project:	Cave Creek Landfill	**Project Number:**	14-2017-2034
Lab Order:	18I008	**Collection:**	9/8/2018
Lab ID:	01	**Matrix:**	Soil vapor

	ppbv		ug/M^3				Date	
Analyses	**Result**	**Limit**	**Result**	**Limit**	**Qual**	**DF**	**Analyzed**	**CAS#**
VOLATILE ORGANICS IN AIR	**TO-15**						Analyst: JJ	
1,1-Dichloroethane	< 2,500	2,500	< 10,100	10,100		5,000	9/18/2018	75-34-3
1,1-Dichloroethene	**17,500**	**2,500**	**69,500**	**9,930**		5,000	9/18/2018	75-35-4
1,2-Dichlorobenzene	< 2,500	2,500	< 15,000	15,000		5,000	9/18/2018	95-50-1
1,2-Dichloroethane	< 2,500	2,500	< 10,100	10,100		5,000	9/18/2018	107-06-2
2-Butanone (MEK)	< 25,000	25,000	< 73,800	73,800		5,000	9/18/2018	78-93-3
Acetone	< 25,000	25,000	< 59,500	59,500		5,000	9/18/2018	67-64-1
Benzene	< 2,500	2,500	< 7,980	7,980		5,000	9/18/2018	71-43-2
Chlorobenzene	< 2,500	2,500	< 11,500	11,500		5,000	9/18/2018	108-90-7
Chloroform	< 2,500	2,500	< 12,200	12,200		5,000	9/18/2018	67-66-3
cis-1,2-Dichloroethene	< 2,500	2,500	< 9,900	9,900		5,000	9/18/2018	156-59-2
Dichlorodifluoromethane(F-12)	< 5,000	5,000	< 24,800	24,800		5,000	9/18/2018	75-71-8
Ethylbenzene	< 2,500	2,500	< 10,900	10,900		5,000	9/18/2018	100-41-4
m&p-Xylene	< 5,000	5,000	< 21,700	21,700		5,000	9/18/2018	179601-23-1
Methylene chloride	< 10,000	10,000	< 34,700	34,700		5,000	9/18/2018	75-09-2
o-Xylene	< 2,500	2,500	< 10,900	10,900		5,000	9/18/2018	95-47-6
Tetrachloroethene	< 5,000	5,000	< 33,900	33,900		5,000	9/18/2018	127-18-4
Tetrahydrofuran	< 10,000	10,000	< 29,500	29,500		5,000	9/18/2018	109-99-9
Toluene	< 2,500	2,500	< 9,430	9,430		5,000	9/18/2018	108-88-3
trans-1,2-Dichloroethene	< 2,500	2,500	< 9,900	9,900		5,000	9/18/2018	156-60-5
Trichloroethene	**91,900**	**2,500**	**494,000**	**13,400**		5,000	9/18/2018	79-01-6
Trichlorofluoromethane(F-11)	< 2,500	2,500	< 14,100	14,100		5,000	9/18/2018	75-69-4
Trichlorotrifluoroethane(F-113)	**5,900**	**2,500**	**45,200**	**19,200**		5,000	9/18/2018	76-13-1
Vinyl chloride	< 2,500	2,500	< 6,400	6,400		5,000	9/18/2018	75-01-4
Surr: 4-Bromofluorobenzene	87.2	70-130	%REC					

Tentatively Identified Compounds (TIC's)

Difluoroethane	< 50,000	50,000	ppbv		T4	5,000	9/18/2018

Airtech Environmental Laboratories (AEL) - AZ 0740

4620 E.Elwood St., Suite 13, Phoenix, AZ 85040 480-968-5888 Fax 480-966-1888

Client:	Wood	**Client Sample ID:**	TSSV-7PZ-SG-090818
Project:	Cave Creek Landfill	**Project Number:**	14-2017-2034
Lab Order:	18I008	**Collection:**	9/8/2018
Lab ID:	02	**Matrix:**	Soil vapor

	ppbv		ug/M^3				Date	
Analyses	**Result**	**Limit**	**Result**	**Limit**	**Qual**	**DF**	**Analyzed**	**CAS#**
VOLATILE ORGANICS IN AIR	**TO-15**						Analyst: JJ	
1,1-Dichloroethane	< 500	500	< 2,025	2,025		1,000	9/18/2018	75-34-3
1,1-Dichloroethene	**8,400**	**500**	**33,350**	**1,985**		1,000	9/18/2018	75-35-4
1,2-Dichlorobenzene	< 500	500	< 3,005	3,005		1,000	9/18/2018	95-50-1
1,2-Dichloroethane	< 500	500	< 2,025	2,025		1,000	9/18/2018	107-06-2
2-Butanone (MEK)	< 5,000	5,000	< 14,750	14,750		1,000	9/18/2018	78-93-3
Acetone	< 5,000	5,000	< 11,900	11,900		1,000	9/18/2018	67-64-1
Benzene	< 500	500	< 1,595	1,595		1,000	9/18/2018	71-43-2
Chlorobenzene	< 500	500	< 2,300	2,300		1,000	9/18/2018	108-90-7
Chloroform	< 500	500	< 2,440	2,440		1,000	9/18/2018	67-66-3
cis-1,2-Dichloroethene	**7,830**	**500**	**31,010**	**1,980**		1,000	9/18/2018	156-59-2
Dichlorodifluoromethane(F-12)	< 1,000	1,000	< 4,950	4,950		1,000	9/18/2018	75-71-8
Ethylbenzene	< 500	500	< 2,170	2,170		1,000	9/18/2018	100-41-4
m&p-Xylene	< 1,000	1,000	< 4,340	4,340		1,000	9/18/2018	179601-23-1
Methylene chloride	< 2,000	2,000	< 6,940	6,940		1,000	9/18/2018	75-09-2
o-Xylene	< 500	500	< 2,170	2,170		1,000	9/18/2018	95-47-6
Tetrachloroethene	**2,780**	**1,000**	**18,850**	**6,780**		1,000	9/18/2018	127-18-4
Tetrahydrofuran	< 2,000	2,000	< 5,900	5,900		1,000	9/18/2018	109-99-9
Toluene	< 500	500	< 1,885	1,885		1,000	9/18/2018	108-88-3
trans-1,2-Dichloroethene	< 500	500	< 1,980	1,980		1,000	9/18/2018	156-60-5
Trichloroethene	**39,900**	**500**	**214,300**	**2,685**		1,000	9/18/2018	79-01-6
Trichlorofluoromethane(F-11)	< 500	500	< 2,810	2,810		1,000	9/18/2018	75-69-4
Trichlorotrifluoroethane(F-113)	**7,100**	**500**	**54,390**	**3,830**		1,000	9/18/2018	76-13-1
Vinyl chloride	**1,810**	**500**	**4,634**	**1,280**		1,000	9/18/2018	75-01-4
Surr: 4-Bromofluorobenzene	89.0	70-130	%REC					

Tentatively Identified Compounds (TIC's)

Difluoroethane	< 10,000	10,000	ppbv		T4	1,000	9/18/2018

Airtech Environmental Laboratories (AEL) - AZ 0740

4620 E.Elwood St., Suite 13, Phoenix, AZ 85040 480-968-5888 Fax 480-966-1888

Client:	Wood	**Client Sample ID:**	TSSV-1S-SG-090818
Project:	Cave Creek Landfill	**Project Number:**	14-2017-2034
Lab Order:	18I008	**Collection:**	9/8/2018
Lab ID:	03	**Matrix:**	Soil vapor

	ppbv		ug/M^3				Date	
Analyses	**Result**	**Limit**	**Result**	**Limit**	**Qual**	**DF**	**Analyzed**	**CAS#**
VOLATILE ORGANICS IN AIR	**TO-15**						Analyst: JJ	
1,1-Dichloroethane	< 100	100	< 405	405		200	9/18/2018	75-34-3
1,1-Dichloroethene	< 100	100	< 397	397		200	9/18/2018	75-35-4
1,2-Dichlorobenzene	< 100	100	< 601	601		200	9/18/2018	95-50-1
1,2-Dichloroethane	< 100	100	< 405	405		200	9/18/2018	107-06-2
2-Butanone (MEK)	< 1,000	1,000	< 2,950	2,950		200	9/18/2018	78-93-3
Acetone	< 1,000	1,000	< 2,380	2,380		200	9/18/2018	67-64-1
Benzene	< 100	100	< 319	319		200	9/18/2018	71-43-2
Chlorobenzene	< 100	100	< 460	460		200	9/18/2018	108-90-7
Chloroform	< 100	100	< 488	488		200	9/18/2018	67-66-3
cis-1,2-Dichloroethene	**210**	**100**	**832**	**396**		200	9/18/2018	156-59-2
Dichlorodifluoromethane(F-12)	< 200	200	< 990	990		200	9/18/2018	75-71-8
Ethylbenzene	< 100	100	< 434	434		200	9/18/2018	100-41-4
m&p-Xylene	< 200	200	< 868	868		200	9/18/2018	179601-23-1
Methylene chloride	< 400	400	< 1,390	1,390		200	9/18/2018	75-09-2
o-Xylene	< 100	100	< 434	434		200	9/18/2018	95-47-6
Tetrachloroethene	**478**	**200**	**3,240**	**1,360**		200	9/18/2018	127-18-4
Tetrahydrofuran	< 400	400	< 1,180	1,180		200	9/18/2018	109-99-9
Toluene	< 100	100	< 377	377		200	9/18/2018	108-88-3
trans-1,2-Dichloroethene	< 100	100	< 396	396		200	9/18/2018	156-60-5
Trichloroethene	**7,380**	**100**	**39,600**	**537**		200	9/18/2018	79-01-6
Trichlorofluoromethane(F-11)	< 100	100	< 562	562		200	9/18/2018	75-69-4
Trichlorotrifluoroethane(F-113)	**182**	**100**	**1,390**	**766**		200	9/18/2018	76-13-1
Vinyl chloride	< 100	100	< 256	256		200	9/18/2018	75-01-4
Surr: 4-Bromofluorobenzene	86.9	70-130	%REC					

Tentatively Identified Compounds (TIC's)

Difluoroethane	< 2,000	2,000	ppbv		T4	200	9/18/2018

Airtech Environmental Laboratories (AEL) - AZ 0740

4620 E.Elwood St., Suite 13, Phoenix, AZ 85040 480-968-5888 Fax 480-966-1888

Client:	Wood	**Client Sample ID:**	TSSV-1M-SG-090818
Project:	Cave Creek Landfill	**Project Number:**	14-2017-2034
Lab Order:	18I008	**Collection:**	9/8/2018
Lab ID:	04	**Matrix:**	Soil vapor

	ppbv		ug/M^3				Date	
Analyses	**Result**	**Limit**	**Result**	**Limit**	**Qual**	**DF**	**Analyzed**	**CAS#**
VOLATILE ORGANICS IN AIR	**TO-15**						Analyst: JJ	
1,1-Dichloroethane	< 250	250	< 1,013	1,013		500	9/20/2018	75-34-3
1,1-Dichloroethene	< 250	250	< 993	993		500	9/20/2018	75-35-4
1,2-Dichlorobenzene	< 250	250	< 1,503	1,503		500	9/20/2018	95-50-1
1,2-Dichloroethane	< 250	250	< 1,013	1,013		500	9/20/2018	107-06-2
2-Butanone (MEK)	< 2,500	2,500	< 7,375	7,375		500	9/20/2018	78-93-3
Acetone	< 2,500	2,500	< 5,950	5,950		500	9/20/2018	67-64-1
Benzene	< 250	250	< 798	798		500	9/20/2018	71-43-2
Chlorobenzene	**1,400**	**250**	**6,440**	**1,150**		500	9/20/2018	108-90-7
Chloroform	< 250	250	< 1,220	1,220		500	9/20/2018	67-66-3
cis-1,2-Dichloroethene	< 250	250	< 990	990		500	9/20/2018	156-59-2
Dichlorodifluoromethane(F-12)	< 500	500	< 2,475	2,475		500	9/20/2018	75-71-8
Ethylbenzene	< 250	250	< 1,085	1,085		500	9/20/2018	100-41-4
m&p-Xylene	< 500	500	< 2,170	2,170		500	9/20/2018	179601-23-1
Methylene chloride	< 1,000	1,000	< 3,470	3,470		500	9/20/2018	75-09-2
o-Xylene	< 250	250	< 1,085	1,085		500	9/20/2018	95-47-6
Tetrachloroethene	**970**	**500**	**6,577**	**3,390**		500	9/20/2018	127-18-4
Tetrahydrofuran	**3,560**	**1,000**	**10,500**	**2,950**		500	9/20/2018	109-99-9
Toluene	< 250	250	< 943	943		500	9/20/2018	108-88-3
trans-1,2-Dichloroethene	< 250	250	< 990	990		500	9/20/2018	156-60-5
Trichloroethene	**5,030**	**250**	**27,010**	**1,343**		500	9/20/2018	79-01-6
Trichlorofluoromethane(F-11)	< 250	250	< 1,405	1,405		500	9/20/2018	75-69-4
Trichlorotrifluoroethane(F-113)	< 250	250	< 1,915	1,915		500	9/20/2018	76-13-1
Vinyl chloride	< 250	250	< 640	640		500	9/20/2018	75-01-4
Surr: 4-Bromofluorobenzene	91.5	70-130	%REC					

Tentatively Identified Compounds (TIC's)

Difluoroethane	< 5,000	5,000	ppbv	T4	500	9/20/2018	

Airtech Environmental Laboratories (AEL) - AZ 0740

4620 E.Elwood St., Suite 13, Phoenix, AZ 85040 480-968-5888 Fax 480-966-1888

Client:	Wood	**Client Sample ID:**	TSSV-1D-SG-090818
Project:	Cave Creek Landfill	**Project Number:**	14-2017-2034
Lab Order:	18I008	**Collection:**	9/8/2018
Lab ID:	05	**Matrix:**	Soil vapor

	ppbv		ug/M^3				Date	
Analyses	**Result**	**Limit**	**Result**	**Limit**	**Qual**	**DF**	**Analyzed**	**CAS#**
VOLATILE ORGANICS IN AIR	**TO-15**						Analyst: JJ	
1,1-Dichloroethane	< 1,000	1,000	< 4,050	4,050		2,000	9/19/2018	75-34-3
1,1-Dichloroethene	< 1,000	1,000	< 3,970	3,970		2,000	9/19/2018	75-35-4
1,2-Dichlorobenzene	< 1,000	1,000	< 6,010	6,010		2,000	9/19/2018	95-50-1
1,2-Dichloroethane	< 1,000	1,000	< 4,050	4,050		2,000	9/19/2018	107-06-2
2-Butanone (MEK)	< 10,000	10,000	< 29,500	29,500		2,000	9/19/2018	78-93-3
Acetone	< 10,000	10,000	< 23,800	23,800		2,000	9/19/2018	67-64-1
Benzene	< 1,000	1,000	< 3,190	3,190		2,000	9/19/2018	71-43-2
Chlorobenzene	< 1,000	1,000	< 4,600	4,600		2,000	9/19/2018	108-90-7
Chloroform	< 1,000	1,000	< 4,880	4,880		2,000	9/19/2018	67-66-3
cis-1,2-Dichloroethene	**3,400**	**1,000**	**13,460**	**3,960**		2,000	9/19/2018	156-59-2
Dichlorodifluoromethane(F-12)	< 2,000	2,000	< 9,900	9,900		2,000	9/19/2018	75-71-8
Ethylbenzene	< 1,000	1,000	< 4,340	4,340		2,000	9/19/2018	100-41-4
m&p-Xylene	< 2,000	2,000	< 8,680	8,680		2,000	9/19/2018	179601-23-1
Methylene chloride	< 4,000	4,000	< 13,880	13,880		2,000	9/19/2018	75-09-2
o-Xylene	< 1,000	1,000	< 4,340	4,340		2,000	9/19/2018	95-47-6
Tetrachloroethene	< 2,000	2,000	< 13,560	13,560		2,000	9/19/2018	127-18-4
Tetrahydrofuran	< 4,000	4,000	< 11,800	11,800		2,000	9/19/2018	109-99-9
Toluene	< 1,000	1,000	< 3,770	3,770		2,000	9/19/2018	108-88-3
trans-1,2-Dichloroethene	< 1,000	1,000	< 3,960	3,960		2,000	9/19/2018	156-60-5
Trichloroethene	**57,800**	**1,000**	**310,400**	**5,370**		2,000	9/19/2018	79-01-6
Trichlorofluoromethane(F-11)	< 1,000	1,000	< 5,620	5,620		2,000	9/19/2018	75-69-4
Trichlorotrifluoroethane(F-113)	**9,260**	**1,000**	**70,930**	**7,660**		2,000	9/19/2018	76-13-1
Vinyl chloride	< 1,000	1,000	2,560	2,560		2,000	9/19/2018	75-01-4
Surr: 4-Bromofluorobenzene	92.8	70-130	%REC					

Tentatively Identified Compounds (TIC's)

Difluoroethane	< 20,000	20,000	ppbv		T4	2,000	9/19/2018

Airtech Environmental Laboratories (AEL) - AZ 0740

4620 E.Elwood St., Suite 13, Phoenix, AZ 85040 480-968-5888 Fax 480-966-1888

Client:	Wood	**Client Sample ID:**	DUP03-090818
Project:	Cave Creek Landfill	**Project Number:**	14-2017-2034
Lab Order:	18I008	**Collection:**	9/8/2018
Lab ID:	06	**Matrix:**	Soil vapor

	ppbv		ug/M^3				Date	
Analyses	**Result**	**Limit**	**Result**	**Limit**	**Qual**	**DF**	**Analyzed**	**CAS#**
VOLATILE ORGANICS IN AIR	**TO-15**						Analyst: JJ	
1,1-Dichloroethane	< 1,000	1,000	< 4,050	4,050		2,000	9/19/2018	75-34-3
1,1-Dichloroethene	< 1,000	1,000	< 3,970	3,970		2,000	9/19/2018	75-35-4
1,2-Dichlorobenzene	< 1,000	1,000	< 6,010	6,010		2,000	9/19/2018	95-50-1
1,2-Dichloroethane	< 1,000	1,000	< 4,050	4,050		2,000	9/19/2018	107-06-2
2-Butanone (MEK)	< 10,000	10,000	< 29,500	29,500		2,000	9/19/2018	78-93-3
Acetone	< 10,000	10,000	< 23,800	23,800		2,000	9/19/2018	67-64-1
Benzene	< 1,000	1,000	< 3,190	3,190		2,000	9/19/2018	71-43-2
Chlorobenzene	**1,160**	**1,000**	**5,336**	**4,600**		2,000	9/19/2018	108-90-7
Chloroform	< 1,000	1,000	< 4,880	4,880		2,000	9/19/2018	67-66-3
cis-1,2-Dichloroethene	**3,020**	**1,000**	**11,960**	**3,960**		2,000	9/19/2018	156-59-2
Dichlorodifluoromethane(F-12)	< 2,000	2,000	< 9,900	9,900		2,000	9/19/2018	75-71-8
Ethylbenzene	< 1,000	1,000	< 4,340	4,340		2,000	9/19/2018	100-41-4
m&p-Xylene	< 2,000	2,000	< 8,680	8,680		2,000	9/19/2018	179601-23-1
Methylene chloride	< 4,000	4,000	< 13,880	13,880		2,000	9/19/2018	75-09-2
o-Xylene	< 1,000	1,000	< 4,340	4,340		2,000	9/19/2018	95-47-6
Tetrachloroethene	**2,360**	**2,000**	**16,000**	**13,560**		2,000	9/19/2018	127-18-4
Tetrahydrofuran	< 4,000	4,000	< 11,800	11,800		2,000	9/19/2018	109-99-9
Toluene	< 1,000	1,000	< 3,770	3,770		2,000	9/19/2018	108-88-3
trans-1,2-Dichloroethene	< 1,000	1,000	< 3,960	3,960		2,000	9/19/2018	156-60-5
Trichloroethene	**70,200**	**1,000**	**377,000**	**5,370**		2,000	9/19/2018	79-01-6
Trichlorofluoromethane(F-11)	< 1,000	1,000	< 5,620	5,620		2,000	9/19/2018	75-69-4
Trichlorotrifluoroethane(F-113)	**9,920**	**1,000**	**75,990**	**7,660**		2,000	9/19/2018	76-13-1
Vinyl chloride	< 1,000	1,000	2,560	2,560		2,000	9/19/2018	75-01-4
Surr: 4-Bromofluorobenzene	96.0	70-130	%REC					

Tentatively Identified Compounds (TIC's)

Difluoroethane	< 20,000	20,000	ppbv		T4	2,000	9/19/2018

Airtech Environmental Laboratories (AEL) - AZ 0740

4620 E.Elwood St., Suite 13, Phoenix, AZ 85040 480-968-5888 Fax 480-966-1888

Client:	Wood	**Client Sample ID:**	TSSV-2S-SG-090818
Project:	Cave Creek Landfill	**Project Number:**	14-2017-2034
Lab Order:	18I008	**Collection:**	9/8/2018
Lab ID:	07	**Matrix:**	Soil vapor

Analyses	ppbv Result	ppbv Limit	ug/M^3 Result	ug/M^3 Limit	Qual	DF	Date Analyzed	CAS#
VOLATILE ORGANICS IN AIR	**TO-15**						Analyst: JJ	
1,1-Dichloroethane	< 10	10	< 40.5	40.5		20	9/20/2018	75-34-3
1,1-Dichloroethene	**38**	**10**	**152**	**39.7**		20	9/20/2018	75-35-4
1,2-Dichlorobenzene	**124**	**10**	**748**	**60.1**		20	9/20/2018	95-50-1
1,2-Dichloroethane	< 10	10	< 40.5	40.5		20	9/20/2018	107-06-2
2-Butanone (MEK)	< 100	100	< 295	295		20	9/20/2018	78-93-3
Acetone	< 100	100	< 238	238		20	9/20/2018	67-64-1
Benzene	< 10	10	< 31.9	31.9		20	9/20/2018	71-43-2
Chlorobenzene	**86**	**10**	**394**	**46.0**		20	9/20/2018	108-90-7
Chloroform	< 10	10	< 48.8	48.8		20	9/20/2018	67-66-3
cis-1,2-Dichloroethene	**55**	**10**	**219**	**39.6**		20	9/20/2018	156-59-2
Dichlorodifluoromethane(F-12)	< 20	20	< 99.0	99.0		20	9/20/2018	75-71-8
Ethylbenzene	< 10	10	< 43.4	43.4		20	9/20/2018	100-41-4
m&p-Xylene	< 20	20	< 86.8	86.8		20	9/20/2018	179601-23-1
Methylene chloride	< 40	40	< 139	139		20	9/20/2018	75-09-2
o-Xylene	< 10	10	< 43.4	43.4		20	9/20/2018	95-47-6
Tetrachloroethene	**118**	**20**	**800**	**136**		20	9/20/2018	127-18-4
Tetrahydrofuran	< 1,000	1,000	2,950	2,950		500	9/19/2018	109-99-9
Toluene	< 10	10	< 37.7	37.7		20	9/20/2018	108-88-3
trans-1,2-Dichloroethene	< 10	10	< 39.6	39.6		20	9/20/2018	156-60-5
Trichloroethene	**923**	**10**	**4,960**	**53.7**		20	9/20/2018	79-01-6
Trichlorofluoromethane(F-11)	< 10	10	< 56.2	56.2		20	9/20/2018	75-69-4
Trichlorotrifluoroethane(F-113)	**14**	**10**	**109**	**76.6**		20	9/20/2018	76-13-1
Vinyl chloride	< 10	10	< 25.6	25.6		20	9/20/2018	75-01-4
Surr: 4-Bromofluorobenzene	99.5	70-130	%REC					

Tentatively Identified Compounds (TIC's)

Difluoroethane	< 200	200	ppbv		T4	20	9/20/2018

Airtech Environmental Laboratories (AEL) - AZ 0740

4620 E.Elwood St., Suite 13, Phoenix, AZ 85040 480-968-5888 Fax 480-966-1888

Client:	Wood	**Client Sample ID:**	TSSV-2M-SG-090818
Project:	Cave Creek Landfill	**Project Number:**	14-2017-2034
Lab Order:	18I008	**Collection:**	9/8/2018
Lab ID:	08	**Matrix:**	Soil vapor

	ppbv		ug/M^3				Date	
Analyses	**Result**	**Limit**	**Result**	**Limit**	**Qual**	**DF**	**Analyzed**	**CAS#**
VOLATILE ORGANICS IN AIR	**TO-15**						Analyst: JJ	
1,1-Dichloroethane	< 500	500	< 2,025	2,025		1,000	9/19/2018	75-34-3
1,1-Dichloroethene	**500**	**500**	**1,985**	**1,985**		1,000	9/19/2018	75-35-4
1,2-Dichlorobenzene	< 500	500	< 3,005	3,005		1,000	9/19/2018	95-50-1
1,2-Dichloroethane	< 500	500	< 2,025	2,025		1,000	9/19/2018	107-06-2
2-Butanone (MEK)	< 5,000	5,000	< 14,750	14,750		1,000	9/19/2018	78-93-3
Acetone	< 5,000	5,000	< 11,900	11,900		1,000	9/19/2018	67-64-1
Benzene	< 500	500	< 1,595	1,595		1,000	9/19/2018	71-43-2
Chlorobenzene	< 500	500	< 2,300	2,300		1,000	9/19/2018	108-90-7
Chloroform	< 500	500	< 2,440	2,440		1,000	9/19/2018	67-66-3
cis-1,2-Dichloroethene	< 500	500	< 1,980	1,980		1,000	9/19/2018	156-59-2
Dichlorodifluoromethane(F-12)	< 1,000	1,000	< 4,950	4,950		1,000	9/19/2018	75-71-8
Ethylbenzene	< 500	500	< 2,170	2,170		1,000	9/19/2018	100-41-4
m&p-Xylene	< 1,000	1,000	< 4,340	4,340		1,000	9/19/2018	179601-23-1
Methylene chloride	< 2,000	2,000	< 6,940	6,940		1,000	9/19/2018	75-09-2
o-Xylene	< 500	500	< 2,170	2,170		1,000	9/19/2018	95-47-6
Tetrachloroethene	< 1,000	1,000	< 6,780	6,780		1,000	9/19/2018	127-18-4
Tetrahydrofuran	**2,310**	**2,000**	**6,815**	**5,900**		1,000	9/19/2018	109-99-9
Toluene	< 500	500	< 1,885	1,885		1,000	9/19/2018	108-88-3
trans-1,2-Dichloroethene	< 500	500	< 1,980	1,980		1,000	9/19/2018	156-60-5
Trichloroethene	**24,800**	**500**	**133,200**	**2,685**		1,000	9/19/2018	79-01-6
Trichlorofluoromethane(F-11)	< 500	500	< 2,810	2,810		1,000	9/19/2018	75-69-4
Trichlorotrifluoroethane(F-113)	**850**	**500**	**6,511**	**3,830**		1,000	9/19/2018	76-13-1
Vinyl chloride	< 500	500	< 1,280	1,280		1,000	9/19/2018	75-01-4
Surr: 4-Bromofluorobenzene	92.8	70-130	%REC					

Tentatively Identified Compounds (TIC's)

Difluoroethane	< 10,000	10,000	ppbv		T4	1,000	9/19/2018

Airtech Environmental Laboratories (AEL) - AZ 0740

4620 E.Elwood St., Suite 13, Phoenix, AZ 85040 480-968-5888 Fax 480-966-1888

Client:	Wood	**Client Sample ID:**	TSSV-2D-SG-090818
Project:	Cave Creek Landfill	**Project Number:**	14-2017-2034
Lab Order:	18I008	**Collection:**	9/8/2018
Lab ID:	09	**Matrix:**	Soil vapor

	ppbv		ug/M^3				Date	
Analyses	**Result**	**Limit**	**Result**	**Limit**	**Qual**	**DF**	**Analyzed**	**CAS#**
VOLATILE ORGANICS IN AIR	**TO-15**						Analyst: JJ	
1,1-Dichloroethane	< 100	100	< 405	405		200	9/20/2018	75-34-3
1,1-Dichloroethene	< 100	100	< 397	397		200	9/20/2018	75-35-4
1,2-Dichlorobenzene	**572**	**100**	**3,440**	**601**		200	9/20/2018	95-50-1
1,2-Dichloroethane	< 100	100	< 405	405		200	9/20/2018	107-06-2
2-Butanone (MEK)	< 1,000	1,000	< 2,950	2,950		200	9/20/2018	78-93-3
Acetone	< 1,000	1,000	< 2,380	2,380		200	9/20/2018	67-64-1
Benzene	< 100	100	< 319	319		200	9/20/2018	71-43-2
Chlorobenzene	**986**	**100**	**4,540**	**460**		200	9/20/2018	108-90-7
Chloroform	< 100	100	< 488	488		200	9/20/2018	67-66-3
cis-1,2-Dichloroethene	**734**	**100**	**2,910**	**396**		200	9/20/2018	156-59-2
Dichlorodifluoromethane(F-12)	< 200	200	< 990	990		200	9/20/2018	75-71-8
Ethylbenzene	< 100	100	< 434	434		200	9/20/2018	100-41-4
m&p-Xylene	< 200	200	< 868	868		200	9/20/2018	179601-23-1
Methylene chloride	< 400	400	< 1,390	1,390		200	9/20/2018	75-09-2
o-Xylene	< 100	100	< 434	434		200	9/20/2018	95-47-6
Tetrachloroethene	**644**	**200**	**4,370**	**1,360**		200	9/20/2018	127-18-4
Tetrahydrofuran	< 400	400	< 1,180	1,180		200	9/20/2018	109-99-9
Toluene	< 100	100	< 377	377		200	9/20/2018	108-88-3
trans-1,2-Dichloroethene	< 100	100	< 396	396		200	9/20/2018	156-60-5
Trichloroethene	**9,980**	**500**	**53,600**	**2,670**		1,000	9/19/2018	79-01-6
Trichlorofluoromethane(F-11)	< 100	100	< 562	562		200	9/20/2018	75-69-4
Trichlorotrifluoroethane(F-113)	**104**	**100**	**797**	**766**		200	9/20/2018	76-13-1
Vinyl chloride	< 100	100	< 256	256		200	9/20/2018	75-01-4
Surr: 4-Bromofluorobenzene	91.6	70-130	%REC					

Tentatively Identified Compounds (TIC's)

Difluoroethane	< 2,000	2,000	ppbv		T4	200	9/20/2018

Airtech Environmental Laboratories (AEL) - AZ 0740

4620 E.Elwood St., Suite 13, Phoenix, AZ 85040 480-968-5888 Fax 480-966-1888

Client:	Wood	**Client Sample ID:**	TSSV-2PZ-SG-090818
Project:	Cave Creek Landfill	**Project Number:**	14-2017-2034
Lab Order:	18I008	**Collection:**	9/8/2018
Lab ID:	10	**Matrix:**	Soil vapor

Analyses	ppbv Result	ppbv Limit	ug/M^3 Result	ug/M^3 Limit	Qual	DF	Date Analyzed	CAS#
VOLATILE ORGANICS IN AIR		**TO-15**					Analyst: JJ	
1,1-Dichloroethane	**11**	**10**	**42.9**	**40.5**		20	9/20/2018	75-34-3
1,1-Dichloroethene	**27**	**10**	**108**	**39.7**		20	9/20/2018	75-35-4
1,2-Dichlorobenzene	< 10	10	< 60.1	60.1		20	9/20/2018	95-50-1
1,2-Dichloroethane	< 10	10	< 40.5	40.5		20	9/20/2018	107-06-2
2-Butanone (MEK)	< 100	100	< 295	295		20	9/20/2018	78-93-3
Acetone	< 100	100	< 238	238		20	9/20/2018	67-64-1
Benzene	< 10	10	< 31.9	31.9		20	9/20/2018	71-43-2
Chlorobenzene	< 10	10	< 46.0	46.0		20	9/20/2018	108-90-7
Chloroform	< 10	10	< 48.8	48.8		20	9/20/2018	67-66-3
cis-1,2-Dichloroethene	**672**	**10**	**2,660**	**39.6**		20	9/20/2018	156-59-2
Dichlorodifluoromethane(F-12)	< 20	20	< 99.0	99.0		20	9/20/2018	75-71-8
Ethylbenzene	< 10	10	< 43.4	43.4		20	9/20/2018	100-41-4
m&p-Xylene	< 20	20	< 86.8	86.8		20	9/20/2018	179601-23-1
Methylene chloride	< 40	40	< 139	139		20	9/20/2018	75-09-2
o-Xylene	< 10	10	< 43.4	43.4		20	9/20/2018	95-47-6
Tetrachloroethene	**40**	**20**	**273**	**136**		20	9/20/2018	127-18-4
Tetrahydrofuran	< 40	40	< 118	118		20	9/20/2018	109-99-9
Toluene	< 10	10	< 37.7	37.7		20	9/20/2018	108-88-3
trans-1,2-Dichloroethene	< 10	10	< 39.6	39.6		20	9/20/2018	156-60-5
Trichloroethene	**842**	**10**	**4,520**	**53.7**		20	9/20/2018	79-01-6
Trichlorofluoromethane(F-11)	< 10	10	< 56.2	56.2		20	9/20/2018	75-69-4
Trichlorotrifluoroethane(F-113)	< 10	10	< 76.6	76.6		20	9/20/2018	76-13-1
Vinyl chloride	< 10	10	< 25.6	25.6		20	9/20/2018	75-01-4
Surr: 4-Bromofluorobenzene	87.7	70-130	%REC					

Tentatively Identified Compounds (TIC's)

Difluoroethane	< 200	200	ppbv		T4	20	9/20/2018

Airtech Environmental Laboratories (AEL) - AZ 0740

4620 E.Elwood St., Suite 13, Phoenix, AZ 85040 480-968-5888 Fax 480-966-1888

Client:	Wood	**Client Sample ID:**	SVE-1S-SG-091018
Project:	Cave Creek Landfill	**Project Number:**	14-2017-2034
Lab Order:	18I008	**Collection:**	9/10/2018
Lab ID:	11	**Matrix:**	Soil vapor

	ppbv		ug/M^3				Date	
Analyses	**Result**	**Limit**	**Result**	**Limit**	**Qual**	**DF**	**Analyzed**	**CAS#**
VOLATILE ORGANICS IN AIR	**TO-15**						Analyst: JJ	
1,1-Dichloroethane	< 10	10	< 40.5	40.5		20	9/19/2018	75-34-3
1,1-Dichloroethene	< 10	10	< 39.7	39.7		20	9/19/2018	75-35-4
1,2-Dichlorobenzene	< 10	10	< 60.1	60.1		20	9/19/2018	95-50-1
1,2-Dichloroethane	< 10	10	< 40.5	40.5		20	9/19/2018	107-06-2
2-Butanone (MEK)	< 100	100	< 295	295		20	9/19/2018	78-93-3
Acetone	< 100	100	< 238	238		20	9/19/2018	67-64-1
Benzene	< 10	10	< 31.9	31.9		20	9/19/2018	71-43-2
Chlorobenzene	**20**	**10**	**90.2**	**46.0**		20	9/19/2018	108-90-7
Chloroform	**21**	**10**	**102**	**48.8**		20	9/19/2018	67-66-3
cis-1,2-Dichloroethene	< 10	10	< 39.6	39.6		20	9/19/2018	156-59-2
Dichlorodifluoromethane(F-12)	< 20	20	< 99.0	99.0		20	9/19/2018	75-71-8
Ethylbenzene	< 10	10	< 43.4	43.4		20	9/19/2018	100-41-4
m&p-Xylene	< 20	20	< 86.8	86.8		20	9/19/2018	179601-23-1
Methylene chloride	< 40	40	< 139	139		20	9/19/2018	75-09-2
o-Xylene	< 10	10	< 43.4	43.4		20	9/19/2018	95-47-6
Tetrachloroethene	**60**	**20**	**408**	**136**		20	9/19/2018	127-18-4
Tetrahydrofuran	< 40	40	< 118	118		20	9/19/2018	109-99-9
Toluene	< 10	10	< 37.7	37.7		20	9/19/2018	108-88-3
trans-1,2-Dichloroethene	< 10	10	< 39.6	39.6		20	9/19/2018	156-60-5
Trichloroethene	**590**	**10**	**3,170**	**53.7**		20	9/19/2018	79-01-6
Trichlorofluoromethane(F-11)	**51**	**10**	**288**	**56.2**		20	9/19/2018	75-69-4
Trichlorotrifluoroethane(F-113)	**31**	**10**	**239**	**76.6**		20	9/19/2018	76-13-1
Vinyl chloride	< 10	10	< 25.6	25.6		20	9/19/2018	75-01-4
Surr: 4-Bromofluorobenzene	94.0	70-130	%REC					

Tentatively Identified Compounds (TIC's)

Difluoroethane	< 200	200	ppbv	T4	20	9/19/2018	

Airtech Environmental Laboratories (AEL) - AZ 0740

4620 E.Elwood St., Suite 13, Phoenix, AZ 85040 480-968-5888 Fax 480-966-1888

Client:	Wood	**Client Sample ID:**	SVE-1M-SG-091018
Project:	Cave Creek Landfill	**Project Number:**	14-2017-2034
Lab Order:	18I008	**Collection:**	9/10/2018
Lab ID:	12	**Matrix:**	Soil vapor

	ppbv		ug/M^3				Date	
Analyses	**Result**	**Limit**	**Result**	**Limit**	**Qual**	**DF**	**Analyzed**	**CAS#**
VOLATILE ORGANICS IN AIR	**TO-15**						Analyst: JJ	
1,1-Dichloroethane	< 100	100	< 405	405		200	9/20/2018	75-34-3
1,1-Dichloroethene	**280**	**100**	**1,110**	**397**		200	9/20/2018	75-35-4
1,2-Dichlorobenzene	**220**	**100**	**1,320**	**601**		200	9/20/2018	95-50-1
1,2-Dichloroethane	< 100	100	< 405	405		200	9/20/2018	107-06-2
2-Butanone (MEK)	< 1,000	1,000	< 2,950	2,950		200	9/20/2018	78-93-3
Acetone	< 1,000	1,000	< 2,380	2,380		200	9/20/2018	67-64-1
Benzene	< 100	100	< 319	319		200	9/20/2018	71-43-2
Chlorobenzene	**6,650**	**100**	**30,600**	**460**		200	9/20/2018	108-90-7
Chloroform	**136**	**100**	**664**	**488**		200	9/20/2018	67-66-3
cis-1,2-Dichloroethene	**826**	**100**	**3,270**	**396**		200	9/20/2018	156-59-2
Dichlorodifluoromethane(F-12)	< 200	200	< 990	990		200	9/20/2018	75-71-8
Ethylbenzene	< 100	100	< 434	434		200	9/20/2018	100-41-4
m&p-Xylene	< 200	200	< 868	868		200	9/20/2018	179601-23-1
Methylene chloride	< 400	400	< 1,390	1,390		200	9/20/2018	75-09-2
o-Xylene	< 100	100	< 434	434		200	9/20/2018	95-47-6
Tetrachloroethene	**690**	**200**	**4,680**	**1,360**		200	9/20/2018	127-18-4
Tetrahydrofuran	< 400	400	< 1,180	1,180		200	9/20/2018	109-99-9
Toluene	< 100	100	< 377	377		200	9/20/2018	108-88-3
trans-1,2-Dichloroethene	< 100	100	< 396	396		200	9/20/2018	156-60-5
Trichloroethene	**8,990**	**500**	**48,300**	**2,690**		1,000	9/19/2018	79-01-6
Trichlorofluoromethane(F-11)	< 100	100	< 562	562		200	9/20/2018	75-69-4
Trichlorotrifluoroethane(F-113)	**350**	**100**	**2,680**	**766**		200	9/20/2018	76-13-1
Vinyl chloride	< 100	100	< 256	256		200	9/20/2018	75-01-4
Surr: 4-Bromofluorobenzene	91.1	70-130	%REC					

Tentatively Identified Compounds (TIC's)

Difluoroethane	< 2,000	2,000	ppbv		T4	200	9/20/2018

Airtech Environmental Laboratories (AEL) - AZ 0740

4620 E.Elwood St., Suite 13, Phoenix, AZ 85040 480-968-5888 Fax 480-966-1888

Client:	Wood	**Client Sample ID:**	SVE-1D-SG-091018
Project:	Cave Creek Landfill	**Project Number:**	14-2017-2034
Lab Order:	18I008	**Collection:**	9/10/2018
Lab ID:	13	**Matrix:**	Soil vapor

	ppbv		ug/M^3				Date	
Analyses	**Result**	**Limit**	**Result**	**Limit**	**Qual**	**DF**	**Analyzed**	**CAS#**
VOLATILE ORGANICS IN AIR		**TO-15**					Analyst: JJ	
1,1-Dichloroethane	< 25	25	< 101	101		50	9/20/2018	75-34-3
1,1-Dichloroethene	< 25	25	< 99.3	99.3		50	9/20/2018	75-35-4
1,2-Dichlorobenzene	< 25	25	< 150	150		50	9/20/2018	95-50-1
1,2-Dichloroethane	< 25	25	< 101	101		50	9/20/2018	107-06-2
2-Butanone (MEK)	< 250	250	< 738	738		50	9/20/2018	78-93-3
Acetone	< 250	250	< 595	595		50	9/20/2018	67-64-1
Benzene	< 25	25	< 79.8	79.8		50	9/20/2018	71-43-2
Chlorobenzene	**544**	**25**	**2,500**	**115**		50	9/20/2018	108-90-7
Chloroform	**32**	**25**	**156**	**122**		50	9/20/2018	67-66-3
cis-1,2-Dichloroethene	**73**	**25**	**287**	**99.0**		50	9/20/2018	156-59-2
Dichlorodifluoromethane(F-12)	< 50	50	< 248	248		50	9/20/2018	75-71-8
Ethylbenzene	< 25	25	< 109	109		50	9/20/2018	100-41-4
m&p-Xylene	< 50	50	< 217	217		50	9/20/2018	179601-23-1
Methylene chloride	< 100	100	< 347	347		50	9/20/2018	75-09-2
o-Xylene	< 25	25	< 109	109		50	9/20/2018	95-47-6
Tetrachloroethene	**88**	**50**	**597**	**339**		50	9/20/2018	127-18-4
Tetrahydrofuran	< 100	100	< 295	295		50	9/20/2018	109-99-9
Toluene	< 25	25	< 94.3	94.3		50	9/20/2018	108-88-3
trans-1,2-Dichloroethene	< 25	25	< 99.0	99.0		50	9/20/2018	156-60-5
Trichloroethene	**1,530**	**25**	**8,220**	**134**		50	9/20/2018	79-01-6
Trichlorofluoromethane(F-11)	**41**	**25**	**230**	**141**		50	9/20/2018	75-69-4
Trichlorotrifluoroethane(F-113)	**52**	**25**	**394**	**192**		50	9/20/2018	76-13-1
Vinyl chloride	< 25	25	< 64.0	64.0		50	9/20/2018	75-01-4
Surr: 4-Bromofluorobenzene	92.8	70-130	%REC					

Tentatively Identified Compounds (TIC's)

Difluoroethane	< 500	500	ppbv		T4	50	9/20/2018

Airtech Environmental Laboratories (AEL) - AZ 0740

4620 E.Elwood St., Suite 13, Phoenix, AZ 85040 480-968-5888 Fax 480-966-1888

Client:	Wood	**Client Sample ID:**	SVE-2S-SG-091018
Project:	Cave Creek Landfill	**Project Number:**	14-2017-2034
Lab Order:	18I008	**Collection:**	9/10/2018
Lab ID:	14	**Matrix:**	Soil vapor

Analyses	ppbv Result	ppbv Limit	ug/M^3 Result	ug/M^3 Limit	Qual	DF	Date Analyzed	CAS#
VOLATILE ORGANICS IN AIR		**TO-15**					Analyst: JJ	
1,1-Dichloroethane	< 10	10	< 40.5	40.5		20	9/19/2018	75-34-3
1,1-Dichloroethene	< 10	10	< 39.7	39.7		20	9/19/2018	75-35-4
1,2-Dichlorobenzene	**12**	**10**	**70.9**	**60.1**		20	9/19/2018	95-50-1
1,2-Dichloroethane	< 10	10	< 40.5	40.5		20	9/19/2018	107-06-2
2-Butanone (MEK)	< 100	100	< 295	295		20	9/19/2018	78-93-3
Acetone	**180**	**100**	**428**	**238**		20	9/19/2018	67-64-1
Benzene	**65**	**10**	**206**	**31.9**		20	9/19/2018	71-43-2
Chlorobenzene	**92**	**10**	**425**	**46.0**		20	9/19/2018	108-90-7
Chloroform	**14**	**10**	**70.3**	**48.8**		20	9/19/2018	67-66-3
cis-1,2-Dichloroethene	**665**	**20**	**2,630**	**79.2**		40	9/20/2018	156-59-2
Dichlorodifluoromethane(F-12)	**116**	**20**	**573**	**99.0**		20	9/19/2018	75-71-8
Ethylbenzene	**17**	**10**	**75.5**	**43.4**		20	9/19/2018	100-41-4
m&p-Xylene	**37**	**20**	**159**	**86.8**		20	9/19/2018	179601-23-1
Methylene chloride	< 40	40	< 139	139		20	9/19/2018	75-09-2
o-Xylene	**15**	**10**	**64.2**	**43.4**		20	9/19/2018	95-47-6
Tetrachloroethene	**153**	**20**	**1,040**	**136**		20	9/19/2018	127-18-4
Tetrahydrofuran	< 40	40	< 118	118		20	9/19/2018	109-99-9
Toluene	**63**	**10**	**237**	**37.7**		20	9/19/2018	108-88-3
trans-1,2-Dichloroethene	< 10	10	< 39.6	39.6		20	9/19/2018	156-60-5
Trichloroethene	**336**	**10**	**1,810**	**53.7**		20	9/19/2018	79-01-6
Trichlorofluoromethane(F-11)	**41**	**10**	**232**	**56.2**		20	9/19/2018	75-69-4
Trichlorotrifluoroethane(F-113)	**12**	**10**	**88.9**	**76.6**		20	9/19/2018	76-13-1
Vinyl chloride	**316**	**10**	**809**	**25.6**		20	9/19/2018	75-01-4
Surr: 4-Bromofluorobenzene	87.6	70-130	%REC					

Tentatively Identified Compounds (TIC's)

Difluoroethane	< 200	200	ppbv		T4	20	9/19/2018	

Airtech Environmental Laboratories (AEL) - AZ 0740

4620 E.Elwood St., Suite 13, Phoenix, AZ 85040 480-968-5888 Fax 480-966-1888

Client:	Wood	**Client Sample ID:**	SVE-2M-SG-091018
Project:	Cave Creek Landfill	**Project Number:**	14-2017-2034
Lab Order:	18I008	**Collection:**	9/10/2018
Lab ID:	15	**Matrix:**	Soil vapor

	ppbv		ug/M^3				Date	
Analyses	**Result**	**Limit**	**Result**	**Limit**	**Qual**	**DF**	**Analyzed**	**CAS#**
VOLATILE ORGANICS IN AIR		**TO-15**					Analyst: JJ	
1,1-Dichloroethane	< 10	10	< 40.5	40.5		20	9/19/2018	75-34-3
1,1-Dichloroethene	< 10	10	< 39.7	39.7		20	9/19/2018	75-35-4
1,2-Dichlorobenzene	< 10	10	< 60.1	60.1		20	9/19/2018	95-50-1
1,2-Dichloroethane	< 10	10	< 40.5	40.5		20	9/19/2018	107-06-2
2-Butanone (MEK)	< 100	100	< 295	295		20	9/19/2018	78-93-3
Acetone	< 100	100	< 238	238		20	9/19/2018	67-64-1
Benzene	< 10	10	< 31.9	31.9		20	9/19/2018	71-43-2
Chlorobenzene	< 10	10	< 46.0	46.0		20	9/19/2018	108-90-7
Chloroform	**31**	**10**	**152**	**48.8**		20	9/19/2018	67-66-3
cis-1,2-Dichloroethene	**24**	**10**	**94.2**	**39.6**		20	9/19/2018	156-59-2
Dichlorodifluoromethane(F-12)	**106**	**20**	**527**	**99.0**		20	9/19/2018	75-71-8
Ethylbenzene	< 10	10	< 43.4	43.4		20	9/19/2018	100-41-4
m&p-Xylene	< 20	20	< 86.8	86.8		20	9/19/2018	179601-23-1
Methylene chloride	< 40	40	< 139	139		20	9/19/2018	75-09-2
o-Xylene	< 10	10	< 43.4	43.4		20	9/19/2018	95-47-6
Tetrachloroethene	**163**	**20**	**1,110**	**136**		20	9/19/2018	127-18-4
Tetrahydrofuran	< 40	40	< 118	118		20	9/19/2018	109-99-9
Toluene	< 10	10	< 37.7	37.7		20	9/19/2018	108-88-3
trans-1,2-Dichloroethene	< 10	10	< 39.6	39.6		20	9/19/2018	156-60-5
Trichloroethene	**249**	**10**	**1,340**	**53.7**		20	9/19/2018	79-01-6
Trichlorofluoromethane(F-11)	**39**	**10**	**218**	**56.2**		20	9/19/2018	75-69-4
Trichlorotrifluoroethane(F-113)	**35**	**10**	**265**	**76.6**		20	9/19/2018	76-13-1
Vinyl chloride	**27**	**10**	**69.6**	**25.6**		20	9/19/2018	75-01-4
Surr: 4-Bromofluorobenzene	92.8	70-130	%REC					

Tentatively Identified Compounds (TIC's)

Difluoroethane	< 200	200	ppbv		T4	20	9/19/2018

Airtech Environmental Laboratories (AEL) - AZ 0740

4620 E.Elwood St., Suite 13, Phoenix, AZ 85040 480-968-5888 Fax 480-966-1888

Client:	Wood	**Client Sample ID:**	TSSV-4M-SG-091018
Project:	Cave Creek Landfill	**Project Number:**	14-2017-2034
Lab Order:	18I008	**Collection:**	9/10/2018
Lab ID:	16	**Matrix:**	Soil vapor

	ppbv		ug/M^3				Date	
Analyses	**Result**	**Limit**	**Result**	**Limit**	**Qual**	**DF**	**Analyzed**	**CAS#**
VOLATILE ORGANICS IN AIR	**TO-15**						Analyst: JJ	
1,1-Dichloroethane	**4.5**	**2.5**	**18.0**	**10.1**		5	9/20/2018	75-34-3
1,1-Dichloroethene	< 2.5	2.5	< 9.93	9.93		5	9/20/2018	75-35-4
1,2-Dichlorobenzene	**5.8**	**2.5**	**34.9**	**15.0**		5	9/20/2018	95-50-1
1,2-Dichloroethane	< 2.5	2.5	< 10.1	10.1		5	9/20/2018	107-06-2
2-Butanone (MEK)	< 25	25	< 73.8	73.8		5	9/20/2018	78-93-3
Acetone	< 25	25	< 59.5	59.5		5	9/20/2018	67-64-1
Benzene	< 2.5	2.5	< 7.98	7.98		5	9/20/2018	71-43-2
Chlorobenzene	**11**	**2.5**	**50.8**	**11.5**		5	9/20/2018	108-90-7
Chloroform	**17**	**2.5**	**81.5**	**12.2**		5	9/20/2018	67-66-3
cis-1,2-Dichloroethene	**3.6**	**2.5**	**14.3**	**9.90**		5	9/20/2018	156-59-2
Dichlorodifluoromethane(F-12)	**74**	**5.0**	**364**	**24.8**		5	9/20/2018	75-71-8
Ethylbenzene	< 2.5	2.5	< 10.9	10.9		5	9/20/2018	100-41-4
m&p-Xylene	< 5.0	5.0	< 21.7	21.7		5	9/20/2018	179601-23-1
Methylene chloride	< 10	10	< 34.7	34.7		5	9/20/2018	75-09-2
o-Xylene	< 2.5	2.5	< 10.9	10.9		5	9/20/2018	95-47-6
Tetrachloroethene	**179**	**5.0**	**1,210**	**33.9**		5	9/20/2018	127-18-4
Tetrahydrofuran	< 10	10	< 29.5	29.5		5	9/20/2018	109-99-9
Toluene	**2.6**	**2.5**	**9.61**	**9.43**		5	9/20/2018	108-88-3
trans-1,2-Dichloroethene	< 2.5	2.5	< 9.90	9.90		5	9/20/2018	156-60-5
Trichloroethene	**104**	**2.5**	**559**	**13.4**		5	9/20/2018	79-01-6
Trichlorofluoromethane(F-11)	**66**	**2.5**	**371**	**14.1**		5	9/20/2018	75-69-4
Trichlorotrifluoroethane(F-113)	**91**	**2.5**	**694**	**19.2**		5	9/20/2018	76-13-1
Vinyl chloride	< 2.5	2.5	< 6.40	6.40		5	9/20/2018	75-01-4
Surr: 4-Bromofluorobenzene	97.4	70-130	%REC					

Tentatively Identified Compounds (TIC's)

Difluoroethane	< 50	50	ppbv		T4	5	9/20/2018

Airtech Environmental Laboratories (AEL) - AZ 0740

4620 E.Elwood St., Suite 13, Phoenix, AZ 85040 480-968-5888 Fax 480-966-1888

Client:	Wood	**Client Sample ID:**	TSSV-4PZ-SG-091018
Project:	Cave Creek Landfill	**Project Number:**	14-2017-2034
Lab Order:	18I008	**Collection:**	9/10/2018
Lab ID:	17	**Matrix:**	Soil vapor

Analyses	ppbv Result	ppbv Limit	ug/M^3 Result	ug/M^3 Limit	Qual	DF	Date Analyzed	CAS#
VOLATILE ORGANICS IN AIR	**TO-15**						Analyst: JJ	
1,1-Dichloroethane	< 100	100	< 405	405		200	9/20/2018	75-34-3
1,1-Dichloroethene	**654**	**100**	**2,600**	**397**		200	9/20/2018	75-35-4
1,2-Dichlorobenzene	< 100	100	< 601	601		200	9/20/2018	95-50-1
1,2-Dichloroethane	< 100	100	< 405	405		200	9/20/2018	107-06-2
2-Butanone (MEK)	< 1,000	1,000	< 2,950	2,950		200	9/20/2018	78-93-3
Acetone	< 1,000	1,000	< 2,380	2,380		200	9/20/2018	67-64-1
Benzene	< 100	100	< 319	319		200	9/20/2018	71-43-2
Chlorobenzene	< 100	100	< 460	460		200	9/20/2018	108-90-7
Chloroform	< 100	100	< 488	488		200	9/20/2018	67-66-3
cis-1,2-Dichloroethene	**856**	**100**	**3,390**	**396**		200	9/20/2018	156-59-2
Dichlorodifluoromethane(F-12)	< 200	200	< 990	990		200	9/20/2018	75-71-8
Ethylbenzene	< 100	100	< 434	434		200	9/20/2018	100-41-4
m&p-Xylene	< 200	200	< 868	868		200	9/20/2018	179601-23-1
Methylene chloride	< 400	400	< 1,390	1,390		200	9/20/2018	75-09-2
o-Xylene	< 100	100	< 434	434		200	9/20/2018	95-47-6
Tetrachloroethene	**446**	**200**	**3,020**	**1,360**		200	9/20/2018	127-18-4
Tetrahydrofuran	< 400	400	< 1,180	1,180		200	9/20/2018	109-99-9
Toluene	< 100	100	< 377	377		200	9/20/2018	108-88-3
trans-1,2-Dichloroethene	< 100	100	< 396	396		200	9/20/2018	156-60-5
Trichloroethene	**4,540**	**100**	**24,400**	**537**		200	9/20/2018	79-01-6
Trichlorofluoromethane(F-11)	< 100	100	< 562	562		200	9/20/2018	75-69-4
Trichlorotrifluoroethane(F-113)	**1,830**	**100**	**14,000**	**766**		200	9/20/2018	76-13-1
Vinyl chloride	< 100	100	< 256	256		200	9/20/2018	75-01-4
Surr: 4-Bromofluorobenzene	88.1	70-130	%REC					

Tentatively Identified Compounds (TIC's)

Difluoroethane	< 2,000	2,000	ppbv		T4	200	9/20/2018

Airtech Environmental Laboratories (AEL) - AZ 0740

4620 E.Elwood St., Suite 13, Phoenix, AZ 85040 480-968-5888 Fax 480-966-1888

Client:	Wood	**Client Sample ID:**	TSSV-4D-SG-091018
Project:	Cave Creek Landfill	**Project Number:**	14-2017-2034
Lab Order:	18I008	**Collection:**	9/10/2018
Lab ID:	18	**Matrix:**	Soil vapor

	ppbv		ug/M^3				Date	
Analyses	**Result**	**Limit**	**Result**	**Limit**	**Qual**	**DF**	**Analyzed**	**CAS#**
VOLATILE ORGANICS IN AIR	**TO-15**						Analyst: JJ	
1,1-Dichloroethane	< 500	500	< 2,025	2,025		1,000	9/19/2018	75-34-3
1,1-Dichloroethene	< 500	500	< 1,985	1,985		1,000	9/19/2018	75-35-4
1,2-Dichlorobenzene	< 500	500	< 3,005	3,005		1,000	9/19/2018	95-50-1
1,2-Dichloroethane	< 500	500	< 2,025	2,025		1,000	9/19/2018	107-06-2
2-Butanone (MEK)	< 5,000	5,000	< 14,750	14,750		1,000	9/19/2018	78-93-3
Acetone	< 5,000	5,000	< 11,900	11,900		1,000	9/19/2018	67-64-1
Benzene	< 500	500	< 1,595	1,595		1,000	9/19/2018	71-43-2
Chlorobenzene	< 500	500	< 2,300	2,300		1,000	9/19/2018	108-90-7
Chloroform	< 500	500	< 2,440	2,440		1,000	9/19/2018	67-66-3
cis-1,2-Dichloroethene	**810**	**500**	**3,208**	**1,980**		1,000	9/19/2018	156-59-2
Dichlorodifluoromethane(F-12)	< 1,000	1,000	< 4,950	4,950		1,000	9/19/2018	75-71-8
Ethylbenzene	< 500	500	< 2,170	2,170		1,000	9/19/2018	100-41-4
m&p-Xylene	< 1,000	1,000	< 4,340	4,340		1,000	9/19/2018	179601-23-1
Methylene chloride	< 2,000	2,000	< 6,940	6,940		1,000	9/19/2018	75-09-2
o-Xylene	< 500	500	< 2,170	2,170		1,000	9/19/2018	95-47-6
Tetrachloroethene	< 1,000	1,000	< 6,780	6,780		1,000	9/19/2018	127-18-4
Tetrahydrofuran	< 2,000	2,000	< 5,900	5,900		1,000	9/19/2018	109-99-9
Toluene	< 500	500	< 1,885	1,885		1,000	9/19/2018	108-88-3
trans-1,2-Dichloroethene	< 500	500	< 1,980	1,980		1,000	9/19/2018	156-60-5
Trichloroethene	**10,600**	**500**	**56,920**	**2,685**		1,000	9/19/2018	79-01-6
Trichlorofluoromethane(F-11)	< 500	500	< 2,810	2,810		1,000	9/19/2018	75-69-4
Trichlorotrifluoroethane(F-113)	**800**	**500**	**6,128**	**3,830**		1,000	9/19/2018	76-13-1
Vinyl chloride	< 500	500	< 1,280	1,280		1,000	9/19/2018	75-01-4
Surr: 4-Bromofluorobenzene	92.1	70-130	%REC					

Tentatively Identified Compounds (TIC's)

Difluoroethane	< 10,000	10,000	ppbv		T4	1,000	9/19/2018

Airtech Environmental Laboratories (AEL) - AZ 0740

4620 E.Elwood St., Suite 13, Phoenix, AZ 85040 480-968-5888 Fax 480-966-1888

Client:	Wood	**Client Sample ID:**	TSSV-5PZ-SG-091218
Project:	Cave Creek Landfill	**Project Number:**	14-2017-2034
Lab Order:	18I008	**Collection:**	9/12/2018
Lab ID:	19	**Matrix:**	Soil vapor

Analyses	ppbv Result	ppbv Limit	ug/M^3 Result	ug/M^3 Limit	Qual	DF	Date Analyzed	CAS#
VOLATILE ORGANICS IN AIR		**TO-15**					Analyst: JJ	
1,1-Dichloroethane	< 50	50	< 203	203		100	9/20/2018	75-34-3
1,1-Dichloroethene	**56**	**50**	**222**	**199**		100	9/20/2018	75-35-4
1,2-Dichlorobenzene	< 50	50	< 301	301		100	9/20/2018	95-50-1
1,2-Dichloroethane	< 50	50	< 203	203		100	9/20/2018	107-06-2
2-Butanone (MEK)	< 500	500	< 1,480	1,480		100	9/20/2018	78-93-3
Acetone	< 500	500	< 1,190	1,190		100	9/20/2018	67-64-1
Benzene	< 50	50	< 160	160		100	9/20/2018	71-43-2
Chlorobenzene	< 50	50	< 230	230		100	9/20/2018	108-90-7
Chloroform	< 50	50	< 244	244		100	9/20/2018	67-66-3
cis-1,2-Dichloroethene	< 50	50	< 198	198		100	9/20/2018	156-59-2
Dichlorodifluoromethane(F-12)	**319**	**100**	**1,580**	**495**		100	9/20/2018	75-71-8
Ethylbenzene	< 50	50	< 217	217		100	9/20/2018	100-41-4
m&p-Xylene	< 100	100	< 434	434		100	9/20/2018	179601-23-1
Methylene chloride	< 200	200	< 694	694		100	9/20/2018	75-09-2
o-Xylene	< 50	50	< 217	217		100	9/20/2018	95-47-6
Tetrachloroethene	**125**	**100**	**848**	**678**		100	9/20/2018	127-18-4
Tetrahydrofuran	< 200	200	< 590	590		100	9/20/2018	109-99-9
Toluene	< 50	50	< 189	189		100	9/20/2018	108-88-3
trans-1,2-Dichloroethene	< 50	50	< 198	198		100	9/20/2018	156-60-5
Trichloroethene	**4,290**	**50**	**23,000**	**269**		100	9/20/2018	79-01-6
Trichlorofluoromethane(F-11)	**166**	**50**	**933**	**281**		100	9/20/2018	75-69-4
Trichlorotrifluoroethane(F-113)	**126**	**50**	**965**	**383**		100	9/20/2018	76-13-1
Vinyl chloride	< 50	50	< 128	128		100	9/20/2018	75-01-4
Surr: 4-Bromofluorobenzene	88.0	70-130	%REC					

Tentatively Identified Compounds (TIC's)

Difluoroethane	< 1,000	1,000	ppbv		T4	100	9/20/2018	

Airtech Environmental Laboratories (AEL) - AZ 0740

4620 E.Elwood St., Suite 13, Phoenix, AZ 85040 480-968-5888 Fax 480-966-1888

Client:	Wood	**Client Sample ID:**	SVE-3S-SG-091218
Project:	Cave Creek Landfill	**Project Number:**	14-2017-2034
Lab Order:	18I008	**Collection:**	9/12/2018
Lab ID:	20	**Matrix:**	Soil vapor

	ppbv		ug/M^3				Date	
Analyses	**Result**	**Limit**	**Result**	**Limit**	**Qual**	**DF**	**Analyzed**	**CAS#**
VOLATILE ORGANICS IN AIR	**TO-15**						Analyst: JJ	
1,1-Dichloroethane	< 2.5	2.5	< 10.1	10.1		5	9/20/2018	75-34-3
1,1-Dichloroethene	< 2.5	2.5	< 9.93	9.93		5	9/20/2018	75-35-4
1,2-Dichlorobenzene	< 2.5	2.5	< 15.0	15.0		5	9/20/2018	95-50-1
1,2-Dichloroethane	< 2.5	2.5	< 10.1	10.1		5	9/20/2018	107-06-2
2-Butanone (MEK)	< 25	25	< 73.8	73.8		5	9/20/2018	78-93-3
Acetone	< 25	25	< 59.5	59.5		5	9/20/2018	67-64-1
Benzene	< 2.5	2.5	< 7.98	7.98		5	9/20/2018	71-43-2
Chlorobenzene	< 2.5	2.5	< 11.5	11.5		5	9/20/2018	108-90-7
Chloroform	**7.1**	**2.5**	**34.4**	**12.2**		5	9/20/2018	67-66-3
cis-1,2-Dichloroethene	**11**	**2.5**	**44.0**	**9.90**		5	9/20/2018	156-59-2
Dichlorodifluoromethane(F-12)	**64**	**5.0**	**314**	**24.8**		5	9/20/2018	75-71-8
Ethylbenzene	< 2.5	2.5	< 10.9	10.9		5	9/20/2018	100-41-4
m&p-Xylene	< 5.0	5.0	< 21.7	21.7		5	9/20/2018	179601-23-1
Methylene chloride	< 10	10	< 34.7	34.7		5	9/20/2018	75-09-2
o-Xylene	< 2.5	2.5	< 10.9	10.9		5	9/20/2018	95-47-6
Tetrachloroethene	**186**	**5.0**	**1,260**	**33.9**		5	9/20/2018	127-18-4
Tetrahydrofuran	< 10	10	< 29.5	29.5		5	9/20/2018	109-99-9
Toluene	< 2.5	2.5	< 9.43	9.43		5	9/20/2018	108-88-3
trans-1,2-Dichloroethene	< 2.5	2.5	< 9.90	9.90		5	9/20/2018	156-60-5
Trichloroethene	**123**	**2.5**	**662**	**13.4**		5	9/20/2018	79-01-6
Trichlorofluoromethane(F-11)	**23**	**2.5**	**128**	**14.1**		5	9/20/2018	75-69-4
Trichlorotrifluoroethane(F-113)	**22**	**2.5**	**169**	**19.2**		5	9/20/2018	76-13-1
Vinyl chloride	**4.1**	**2.5**	**10.4**	**6.40**		5	9/20/2018	75-01-4
Surr: 4-Bromofluorobenzene	92.4	70-130	%REC					

Tentatively Identified Compounds (TIC's)

Difluoroethane	< 50	50	ppbv		T4	5	9/20/2018

Airtech Environmental Laboratories (AEL) - AZ 0740

4620 E.Elwood St., Suite 13, Phoenix, AZ 85040 480-968-5888 Fax 480-966-1888

Client:	Wood	**Client Sample ID:**	SVE-3M-SG-091218
Project:	Cave Creek Landfill	**Project Number:**	14-2017-2034
Lab Order:	18I008	**Collection:**	9/12/2018
Lab ID:	21	**Matrix:**	Soil vapor

	ppbv		ug/M^3				Date	
Analyses	**Result**	**Limit**	**Result**	**Limit**	**Qual**	**DF**	**Analyzed**	**CAS#**
VOLATILE ORGANICS IN AIR	**TO-15**						Analyst: JJ	
1,1-Dichloroethane	**17**	**10**	**69.7**	**40.5**		20	9/19/2018	75-34-3
1,1-Dichloroethene	< 10	10	< 39.7	39.7		20	9/19/2018	75-35-4
1,2-Dichlorobenzene	< 10	10	< 60.1	60.1		20	9/19/2018	95-50-1
1,2-Dichloroethane	< 10	10	< 40.5	40.5		20	9/19/2018	107-06-2
2-Butanone (MEK)	< 100	100	< 295	295		20	9/19/2018	78-93-3
Acetone	< 100	100	< 238	238		20	9/19/2018	67-64-1
Benzene	< 10	10	< 31.9	31.9		20	9/19/2018	71-43-2
Chlorobenzene	< 10	10	< 46.0	46.0		20	9/19/2018	108-90-7
Chloroform	**23**	**10**	**113**	**48.8**		20	9/19/2018	67-66-3
cis-1,2-Dichloroethene	**14**	**10**	**53.9**	**39.6**		20	9/19/2018	156-59-2
Dichlorodifluoromethane(F-12)	**337**	**20**	**1,670**	**99.0**		20	9/19/2018	75-71-8
Ethylbenzene	< 10	10	< 43.4	43.4		20	9/19/2018	100-41-4
m&p-Xylene	< 20	20	< 86.8	86.8		20	9/19/2018	179601-23-1
Methylene chloride	**336**	**40**	**1,170**	**139**		20	9/19/2018	75-09-2
o-Xylene	< 10	10	< 43.4	43.4		20	9/19/2018	95-47-6
Tetrachloroethene	**177**	**20**	**1,200**	**136**		20	9/19/2018	127-18-4
Tetrahydrofuran	< 40	40	< 118	118		20	9/19/2018	109-99-9
Toluene	< 10	10	< 37.7	37.7		20	9/19/2018	108-88-3
trans-1,2-Dichloroethene	< 10	10	< 39.6	39.6		20	9/19/2018	156-60-5
Trichloroethene	**341**	**10**	**1,830**	**53.7**		20	9/19/2018	79-01-6
Trichlorofluoromethane(F-11)	**282**	**10**	**1,590**	**56.2**		20	9/19/2018	75-69-4
Trichlorotrifluoroethane(F-113)	**103**	**10**	**789**	**76.6**		20	9/19/2018	76-13-1
Vinyl chloride	< 10	10	< 25.6	25.6		20	9/19/2018	75-01-4
Surr: 4-Bromofluorobenzene	97.0	70-130	%REC					

Tentatively Identified Compounds (TIC's)

Difluoroethane	< 200	200	ppbv		T4	20	9/19/2018

Airtech Environmental Laboratories (AEL) - AZ 0740

4620 E.Elwood St., Suite 13, Phoenix, AZ 85040 480-968-5888 Fax 480-966-1888

Client:	Wood	**Client Sample ID:**	SVE-3-SG-091218
Project:	Cave Creek Landfill	**Project Number:**	14-2017-2034
Lab Order:	18I008	**Collection:**	9/12/2018
Lab ID:	22	**Matrix:**	Soil vapor

	ppbv		ug/M^3				Date	
Analyses	**Result**	**Limit**	**Result**	**Limit**	**Qual**	**DF**	**Analyzed**	**CAS#**
VOLATILE ORGANICS IN AIR	**TO-15**						Analyst: JJ	
1,1-Dichloroethane	< 1,000	1,000	< 4,050	4,050		2,000	9/19/2018	75-34-3
1,1-Dichloroethene	**1,240**	**1,000**	**4,923**	**3,970**		2,000	9/19/2018	75-35-4
1,2-Dichlorobenzene	< 1,000	1,000	< 6,010	6,010		2,000	9/19/2018	95-50-1
1,2-Dichloroethane	< 1,000	1,000	< 4,050	4,050		2,000	9/19/2018	107-06-2
2-Butanone (MEK)	< 10,000	10,000	< 29,500	29,500		2,000	9/19/2018	78-93-3
Acetone	< 10,000	10,000	< 23,800	23,800		2,000	9/19/2018	67-64-1
Benzene	< 1,000	1,000	< 3,190	3,190		2,000	9/19/2018	71-43-2
Chlorobenzene	< 1,000	1,000	< 4,600	4,600		2,000	9/19/2018	108-90-7
Chloroform	< 1,000	1,000	< 4,880	4,880		2,000	9/19/2018	67-66-3
cis-1,2-Dichloroethene	**1,100**	**1,000**	**4,356**	**3,960**		2,000	9/19/2018	156-59-2
Dichlorodifluoromethane(F-12)	< 2,000	2,000	< 9,900	9,900		2,000	9/19/2018	75-71-8
Ethylbenzene	< 1,000	1,000	< 4,340	4,340		2,000	9/19/2018	100-41-4
m&p-Xylene	< 2,000	2,000	< 8,680	8,680		2,000	9/19/2018	179601-23-1
Methylene chloride	< 4,000	4,000	< 13,880	13,880		2,000	9/19/2018	75-09-2
o-Xylene	< 1,000	1,000	< 4,340	4,340		2,000	9/19/2018	95-47-6
Tetrachloroethene	< 2,000	2,000	< 13,560	13,560		2,000	9/19/2018	127-18-4
Tetrahydrofuran	< 4,000	4,000	< 11,800	11,800		2,000	9/19/2018	109-99-9
Toluene	< 1,000	1,000	< 3,770	3,770		2,000	9/19/2018	108-88-3
trans-1,2-Dichloroethene	< 1,000	1,000	< 3,960	3,960		2,000	9/19/2018	156-60-5
Trichloroethene	**22,600**	**1,000**	**121,400**	**5,370**		2,000	9/19/2018	79-01-6
Trichlorofluoromethane(F-11)	< 1,000	1,000	< 5,620	5,620		2,000	9/19/2018	75-69-4
Trichlorotrifluoroethane(F-113)	**3,620**	**1,000**	**27,730**	**7,660**		2,000	9/19/2018	76-13-1
Vinyl chloride	< 1,000	1,000	2,560	2,560		2,000	9/19/2018	75-01-4
Surr: 4-Bromofluorobenzene	94.9	70-130	%REC					

Tentatively Identified Compounds (TIC's)

Difluoroethane	< 20,000	20,000	ppbv		T4	2,000	9/19/2018

Airtech Environmental Laboratories (AEL) - AZ 0740

4620 E.Elwood St., Suite 13, Phoenix, AZ 85040 480-968-5888 Fax 480-966-1888

Client:	Wood	**Client Sample ID:**	SVE-4S-SG-091218
Project:	Cave Creek Landfill	**Project Number:**	14-2017-2034
Lab Order:	18I008	**Collection:**	9/12/2018
Lab ID:	23	**Matrix:**	Soil vapor

	ppbv		ug/M^3				Date	
Analyses	**Result**	**Limit**	**Result**	**Limit**	**Qual**	**DF**	**Analyzed**	**CAS#**
VOLATILE ORGANICS IN AIR	**TO-15**						Analyst: JJ	
1,1-Dichloroethane	< 5.0	5.0	20.3	20.3		10	9/20/2018	75-34-3
1,1-Dichloroethene	< 5.0	5.0	< 19.9	19.9		10	9/20/2018	75-35-4
1,2-Dichlorobenzene	**30**	**5.0**	**180**	**30.1**		10	9/20/2018	95-50-1
1,2-Dichloroethane	< 5.0	5.0	< 20.3	20.3		10	9/20/2018	107-06-2
2-Butanone (MEK)	< 50	50	< 148	148		10	9/20/2018	78-93-3
Acetone	< 50	50	< 119	119		10	9/20/2018	67-64-1
Benzene	< 5.0	5.0	< 16.0	16.0		10	9/20/2018	71-43-2
Chlorobenzene	**186**	**5.0**	**853**	**23.0**		10	9/20/2018	108-90-7
Chloroform	**5.6**	**5.0**	**27.3**	**24.4**		10	9/20/2018	67-66-3
cis-1,2-Dichloroethene	**56**	**5.0**	**223**	**19.8**		10	9/20/2018	156-59-2
Dichlorodifluoromethane(F-12)	**44**	**10**	**219**	**49.5**		10	9/20/2018	75-71-8
Ethylbenzene	< 5.0	5.0	< 21.7	21.7		10	9/20/2018	100-41-4
m&p-Xylene	< 10	10	< 43.4	43.4		10	9/20/2018	179601-23-1
Methylene chloride	< 20	20	< 69.4	69.4		10	9/20/2018	75-09-2
o-Xylene	< 5.0	5.0	< 21.7	21.7		10	9/20/2018	95-47-6
Tetrachloroethene	**47**	**10**	**315**	**67.8**		10	9/20/2018	127-18-4
Tetrahydrofuran	< 20	20	< 59.0	59.0		10	9/20/2018	109-99-9
Toluene	< 5.0	5.0	< 18.9	18.9		10	9/20/2018	108-88-3
trans-1,2-Dichloroethene	< 5.0	5.0	< 19.8	19.8		10	9/20/2018	156-60-5
Trichloroethene	**175**	**5.0**	**937**	**26.9**		10	9/20/2018	79-01-6
Trichlorofluoromethane(F-11)	**84**	**5.0**	**472**	**28.1**		10	9/20/2018	75-69-4
Trichlorotrifluoroethane(F-113)	**13**	**5.0**	**102**	**38.3**		10	9/20/2018	76-13-1
Vinyl chloride	< 5.0	5.0	< 12.8	12.8		10	9/20/2018	75-01-4
Surr: 4-Bromofluorobenzene	94.5	70-130	%REC					

Tentatively Identified Compounds (TIC's)

Difluoroethane	< 100	100	ppbv		T4	10	9/20/2018

Airtech Environmental Laboratories (AEL) - AZ 0740

4620 E.Elwood St., Suite 13, Phoenix, AZ 85040 480-968-5888 Fax 480-966-1888

Client:	Wood	**Client Sample ID:**	SVE-4M-SG-091218
Project:	Cave Creek Landfill	**Project Number:**	14-2017-2034
Lab Order:	18I008	**Collection:**	9/12/2018
Lab ID:	24	**Matrix:**	Soil vapor

	ppbv		ug/M^3				Date	
Analyses	**Result**	**Limit**	**Result**	**Limit**	**Qual**	**DF**	**Analyzed**	**CAS#**
VOLATILE ORGANICS IN AIR	**TO-15**						Analyst: JJ	
1,1-Dichloroethane	< 100	100	< 405	405		200	9/20/2018	75-34-3
1,1-Dichloroethene	**882**	**100**	**3,500**	**397**		200	9/20/2018	75-35-4
1,2-Dichlorobenzene	**846**	**100**	**5,084**	**601**		200	9/20/2018	95-50-1
1,2-Dichloroethane	< 100	100	< 405	405		200	9/20/2018	107-06-2
2-Butanone (MEK)	< 1,000	1,000	< 2,950	2,950		200	9/20/2018	78-93-3
Acetone	< 1,000	1,000	< 2,380	2,380		200	9/20/2018	67-64-1
Benzene	< 100	100	< 319	319		200	9/20/2018	71-43-2
Chlorobenzene	**3,770**	**100**	**17,300**	**460**		200	9/20/2018	108-90-7
Chloroform	< 100	100	< 488	488		200	9/20/2018	67-66-3
cis-1,2-Dichloroethene	**512**	**100**	**2,030**	**396**		200	9/20/2018	156-59-2
Dichlorodifluoromethane(F-12)	< 200	200	< 990	990		200	9/20/2018	75-71-8
Ethylbenzene	< 100	100	< 434	434		200	9/20/2018	100-41-4
m&p-Xylene	< 200	200	< 868	868		200	9/20/2018	179601-23-1
Methylene chloride	< 400	400	< 1,390	1,390		200	9/20/2018	75-09-2
o-Xylene	< 100	100	< 434	434		200	9/20/2018	95-47-6
Tetrachloroethene	**602**	**200**	**4,080**	**1,360**		200	9/20/2018	127-18-4
Tetrahydrofuran	< 400	400	< 1,180	1,180		200	9/20/2018	109-99-9
Toluene	< 100	100	< 377	377		200	9/20/2018	108-88-3
trans-1,2-Dichloroethene	< 100	100	< 396	396		200	9/20/2018	156-60-5
Trichloroethene	**1,580**	**100**	**8,490**	**537**		200	9/20/2018	79-01-6
Trichlorofluoromethane(F-11)	< 100	100	< 562	562		200	9/20/2018	75-69-4
Trichlorotrifluoroethane(F-113)	< 100	100	< 766	766		200	9/20/2018	76-13-1
Vinyl chloride	< 100	100	< 256	256		200	9/20/2018	75-01-4
Surr: 4-Bromofluorobenzene	91.5	70-130	%REC					

Tentatively Identified Compounds (TIC's)

Difluoroethane	< 2,000	2,000	ppbv	T4	200	9/20/2018	

Airtech Environmental Laboratories (AEL) - AZ 0740

4620 E.Elwood St., Suite 13, Phoenix, AZ 85040 480-968-5888 Fax 480-966-1888

Client:	Wood	**Client Sample ID:**	SVE-4-SG-091218
Project:	Cave Creek Landfill	**Project Number:**	14-2017-2034
Lab Order:	18I008	**Collection:**	9/12/2018
Lab ID:	25	**Matrix:**	Soil vapor

	ppbv		ug/M^3				Date	
Analyses	**Result**	**Limit**	**Result**	**Limit**	**Qual**	**DF**	**Analyzed**	**CAS#**
VOLATILE ORGANICS IN AIR	**TO-15**						Analyst: JJ	
1,1-Dichloroethane	< 2,500	2,500	< 10,100	10,100		5,000	9/20/2018	75-34-3
1,1-Dichloroethene	**57,500**	**2,500**	**228,000**	**9,930**		5,000	9/20/2018	75-35-4
1,2-Dichlorobenzene	< 2,500	2,500	< 15,000	15,000		5,000	9/20/2018	95-50-1
1,2-Dichloroethane	< 2,500	2,500	< 10,100	10,100		5,000	9/20/2018	107-06-2
2-Butanone (MEK)	< 25,000	25,000	< 73,800	73,800		5,000	9/20/2018	78-93-3
Acetone	< 25,000	25,000	< 59,500	59,500		5,000	9/20/2018	67-64-1
Benzene	< 2,500	2,500	< 7,980	7,980		5,000	9/20/2018	71-43-2
Chlorobenzene	< 2,500	2,500	< 11,500	11,500		5,000	9/20/2018	108-90-7
Chloroform	< 2,500	2,500	< 12,200	12,200		5,000	9/20/2018	67-66-3
cis-1,2-Dichloroethene	**8,250**	**2,500**	**32,700**	**9,900**		5,000	9/20/2018	156-59-2
Dichlorodifluoromethane(F-12)	< 5,000	5,000	< 24,800	24,800		5,000	9/20/2018	75-71-8
Ethylbenzene	< 2,500	2,500	< 10,900	10,900		5,000	9/20/2018	100-41-4
m&p-Xylene	< 5,000	5,000	< 21,700	21,700		5,000	9/20/2018	179601-23-1
Methylene chloride	**70,000**	**10,000**	**243,000**	**34,700**		5,000	9/20/2018	75-09-2
o-Xylene	< 2,500	2,500	< 10,900	10,900		5,000	9/20/2018	95-47-6
Tetrachloroethene	**12,600**	**5,000**	**85,400**	**33,900**		5,000	9/20/2018	127-18-4
Tetrahydrofuran	< 10,000	10,000	< 29,500	29,500		5,000	9/20/2018	109-99-9
Toluene	< 2,500	2,500	< 9,430	9,430		5,000	9/20/2018	108-88-3
trans-1,2-Dichloroethene	< 2,500	2,500	< 9,900	9,900		5,000	9/20/2018	156-60-5
Trichloroethene	**71,900**	**2,500**	**386,000**	**13,400**		5,000	9/20/2018	79-01-6
Trichlorofluoromethane(F-11)	< 2,500	2,500	< 14,100	14,100		5,000	9/20/2018	75-69-4
Trichlorotrifluoroethane(F-113)	**18,400**	**2,500**	**141,000**	**19,200**		5,000	9/20/2018	76-13-1
Vinyl chloride	< 2,500	2,500	< 6,400	6,400		5,000	9/20/2018	75-01-4
Surr: 4-Bromofluorobenzene	97.4	70-130	%REC					

Tentatively Identified Compounds (TIC's)

Difluoroethane	< 50,000	50,000	ppbv		T4	5,000	9/20/2018

Airtech Environmental Laboratories (AEL) - AZ 0740

4620 E.Elwood St., Suite 13, Phoenix, AZ 85040 480-968-5888 Fax 480-966-1888

Client:	Wood	**Client Sample ID:**	SVE-2-SG-091218
Project:	Cave Creek Landfill	**Project Number:**	14-2017-2034
Lab Order:	18I008	**Collection:**	9/12/2018
Lab ID:	26	**Matrix:**	Soil vapor

Analyses	ppbv Result	ppbv Limit	ug/M^3 Result	ug/M^3 Limit	Qual	DF	Date Analyzed	CAS#
VOLATILE ORGANICS IN AIR	**TO-15**						Analyst: JJ	
1,1-Dichloroethane	< 100	100	< 405	405		200	9/21/2018	75-34-3
1,1-Dichloroethene	**204**	**100**	**810**	**397**		200	9/21/2018	75-35-4
1,2-Dichlorobenzene	< 100	100	< 601	601		200	9/21/2018	95-50-1
1,2-Dichloroethane	< 100	100	< 405	405		200	9/21/2018	107-06-2
2-Butanone (MEK)	< 1,000	1,000	< 2,950	2,950		200	9/21/2018	78-93-3
Acetone	< 1,000	1,000	< 2,380	2,380		200	9/21/2018	67-64-1
Benzene	< 100	100	< 319	319		200	9/21/2018	71-43-2
Chlorobenzene	**104**	**100**	**478**	**460**		200	9/21/2018	108-90-7
Chloroform	**160**	**100**	**781**	**488**		200	9/21/2018	67-66-3
cis-1,2-Dichloroethene	**432**	**100**	**1,710**	**396**		200	9/21/2018	156-59-2
Dichlorodifluoromethane(F-12)	< 200	200	< 990	990		200	9/21/2018	75-71-8
Ethylbenzene	< 100	100	< 434	434		200	9/21/2018	100-41-4
m&p-Xylene	< 200	200	< 868	868		200	9/21/2018	179601-23-1
Methylene chloride	< 400	400	< 1,390	1,390		200	9/21/2018	75-09-2
o-Xylene	< 100	100	< 434	434		200	9/21/2018	95-47-6
Tetrachloroethene	**908**	**200**	**6,160**	**1,360**		200	9/21/2018	127-18-4
Tetrahydrofuran	< 400	400	< 1,180	1,180		200	9/21/2018	109-99-9
Toluene	< 100	100	< 377	377		200	9/21/2018	108-88-3
trans-1,2-Dichloroethene	< 100	100	< 396	396		200	9/21/2018	156-60-5
Trichloroethene	**10,000**	**100**	**53,700**	**537**		200	9/21/2018	79-01-6
Trichlorofluoromethane(F-11)	< 100	100	< 562	562		200	9/21/2018	75-69-4
Trichlorotrifluoroethane(F-113)	**1,230**	**100**	**9,420**	**766**		200	9/21/2018	76-13-1
Vinyl chloride	< 100	100	< 256	256		200	9/21/2018	75-01-4
Surr: 4-Bromofluorobenzene	87.4	70-130	%REC					

Tentatively Identified Compounds (TIC's)

Difluoroethane	< 2,000	2,000	ppbv		T4	200	9/21/2018

Airtech Environmental Laboratories (AEL) - AZ 0740

4620 E.Elwood St., Suite 13, Phoenix, AZ 85040 480-968-5888 Fax 480-966-1888

Client:	Wood	**Client Sample ID:**	TSSV-PW-SG-091218
Project:	Cave Creek Landfill	**Project Number:**	14-2017-2034
Lab Order:	18I008	**Collection:**	9/12/2018
Lab ID:	27	**Matrix:**	Soil vapor

	ppbv		ug/M^3				Date	
Analyses	**Result**	**Limit**	**Result**	**Limit**	**Qual**	**DF**	**Analyzed**	**CAS#**
VOLATILE ORGANICS IN AIR	**TO-15**						Analyst: JJ	
1,1-Dichloroethane	< 50	50	< 203	203		100	9/21/2018	75-34-3
1,1-Dichloroethene	< 50	50	< 199	199		100	9/21/2018	75-35-4
1,2-Dichlorobenzene	< 50	50	< 301	301		100	9/21/2018	95-50-1
1,2-Dichloroethane	< 50	50	< 203	203		100	9/21/2018	107-06-2
2-Butanone (MEK)	< 500	500	< 1,480	1,480		100	9/21/2018	78-93-3
Acetone	< 500	500	< 1,190	1,190		100	9/21/2018	67-64-1
Benzene	< 50	50	< 160	160		100	9/21/2018	71-43-2
Chlorobenzene	< 50	50	< 230	230		100	9/21/2018	108-90-7
Chloroform	< 50	50	< 244	244		100	9/21/2018	67-66-3
cis-1,2-Dichloroethene	**94**	**50**	**372**	**198**		100	9/21/2018	156-59-2
Dichlorodifluoromethane(F-12)	< 100	100	< 495	495		100	9/21/2018	75-71-8
Ethylbenzene	< 50	50	< 217	217		100	9/21/2018	100-41-4
m&p-Xylene	< 100	100	< 434	434		100	9/21/2018	179601-23-1
Methylene chloride	< 200	200	< 694	694		100	9/21/2018	75-09-2
o-Xylene	< 50	50	< 217	217		100	9/21/2018	95-47-6
Tetrachloroethene	**183**	**100**	**1,240**	**678**		100	9/21/2018	127-18-4
Tetrahydrofuran	< 200	200	< 590	590		100	9/21/2018	109-99-9
Toluene	< 50	50	< 189	189		100	9/21/2018	108-88-3
trans-1,2-Dichloroethene	< 50	50	< 198	198		100	9/21/2018	156-60-5
Trichloroethene	**3,110**	**50**	**16,700**	**269**		100	9/21/2018	79-01-6
Trichlorofluoromethane(F-11)	< 50	50	< 281	281		100	9/21/2018	75-69-4
Trichlorotrifluoroethane(F-113)	**99**	**50**	**758**	**383**		100	9/21/2018	76-13-1
Vinyl chloride	< 50	50	< 128	128		100	9/21/2018	75-01-4
Surr: 4-Bromofluorobenzene	92.2	70-130	%REC					

Tentatively Identified Compounds (TIC's)

Difluoroethane	< 1,000	1,000	ppbv		T4	100	9/21/2018

Airtech Environmental Laboratories (AEL) - AZ 0740

4620 E.Elwood St., Suite 13, Phoenix, AZ 85040 480-968-5888 Fax 480-966-1888

Client:	Wood	**Client Sample ID:**	SVE-1-SG-091218
Project:	Cave Creek Landfill	**Project Number:**	14-2017-2034
Lab Order:	18I008	**Collection:**	9/12/2018
Lab ID:	28	**Matrix:**	Soil vapor

Analyses	ppbv Result	ppbv Limit	ug/M^3 Result	ug/M^3 Limit	Qual	DF	Date Analyzed	CAS#
VOLATILE ORGANICS IN AIR	**TO-15**						Analyst: JJ	
1,1-Dichloroethane	< 50	50	< 203	203		100	9/21/2018	75-34-3
1,1-Dichloroethene	**104**	**50**	**413**	**199**		100	9/21/2018	75-35-4
1,2-Dichlorobenzene	**70**	**50**	**421**	**301**		100	9/21/2018	95-50-1
1,2-Dichloroethane	< 50	50	< 203	203		100	9/21/2018	107-06-2
2-Butanone (MEK)	< 500	500	< 1,480	1,480		100	9/21/2018	78-93-3
Acetone	< 500	500	< 1,190	1,190		100	9/21/2018	67-64-1
Benzene	< 50	50	< 160	160		100	9/21/2018	71-43-2
Chlorobenzene	**1,840**	**50**	**8,460**	**230**		100	9/21/2018	108-90-7
Chloroform	**75**	**50**	**366**	**244**		100	9/21/2018	67-66-3
cis-1,2-Dichloroethene	**270**	**50**	**1,070**	**198**		100	9/21/2018	156-59-2
Dichlorodifluoromethane(F-12)	< 100	100	< 495	495		100	9/21/2018	75-71-8
Ethylbenzene	< 50	50	< 217	217		100	9/21/2018	100-41-4
m&p-Xylene	< 100	100	< 434	434		100	9/21/2018	179601-23-1
Methylene chloride	< 200	200	< 694	694		100	9/21/2018	75-09-2
o-Xylene	< 50	50	< 217	217		100	9/21/2018	95-47-6
Tetrachloroethene	**310**	**100**	**2,100**	**678**		100	9/21/2018	127-18-4
Tetrahydrofuran	< 200	200	< 590	590		100	9/21/2018	109-99-9
Toluene	< 50	50	< 189	189		100	9/21/2018	108-88-3
trans-1,2-Dichloroethene	< 50	50	< 198	198		100	9/21/2018	156-60-5
Trichloroethene	**3,070**	**250**	**16,500**	**1,340**		500	9/21/2018	79-01-6
Trichlorofluoromethane(F-11)	**51**	**50**	**287**	**281**		100	9/21/2018	75-69-4
Trichlorotrifluoroethane(F-113)	**155**	**50**	**1,190**	**383**		100	9/21/2018	76-13-1
Vinyl chloride	< 50	50	< 128	128		100	9/21/2018	75-01-4
Surr: 4-Bromofluorobenzene	91.4	70-130	%REC					

Tentatively Identified Compounds (TIC's)

Difluoroethane	< 1,000	1,000	ppbv		T4	100	9/21/2018

Airtech Environmental Laboratories (AEL) - AZ 0740

4620 E.Elwood St., Suite 13, Phoenix, AZ 85040 480-968-5888 Fax 480-966-1888

Client:	Wood	**Client Sample ID:**	N/A
Project:	Cave Creek Landfill	**Project Number:**	14-2017-2034
Lab Order:	18I008	**Collection:**	N/A
Lab ID:	Blank	**Matrix:**	Nitrogen

Method QC Data

Batch: MS010917 Analyst: JJ

Analyses	ppbv Result	ppbv Limit	ug/M^3 Result	ug/M^3 Limit	Qual	DF	Date Analyzed	CAS#
VOLATILE ORGANICS IN AIR		**TO-15**					Analyst: JJ	
1,1-Dichloroethane	< 0.5	0.5	< 2.03	2.03		1	9/17/2018	75-34-3
1,1-Dichloroethene	< 0.5	0.5	< 1.99	1.99		1	9/17/2018	75-35-4
1,2-Dichlorobenzene	< 0.5	0.5	< 3.01	3.01		1	9/17/2018	95-50-1
1,2-Dichloroethane	< 0.5	0.5	< 2.03	2.03		1	9/17/2018	107-06-2
2-Butanone (MEK)	< 5.0	5.0	< 14.8	14.8		1	9/17/2018	78-93-3
Acetone	< 5.0	5.0	< 11.9	11.9		1	9/17/2018	67-64-1
Benzene	< 0.5	0.5	< 1.60	1.60		1	9/17/2018	71-43-2
Chlorobenzene	< 0.5	0.5	< 2.30	2.30		1	9/17/2018	108-90-7
Chloroform	< 0.5	0.5	< 2.44	2.44		1	9/17/2018	67-66-3
cis-1,2-Dichloroethene	< 0.5	0.5	< 1.98	1.98		1	9/17/2018	156-59-2
Dichlorodifluoromethane(F-12)	< 1.0	1.0	< 4.95	4.95		1	9/17/2018	75-71-8
Ethylbenzene	< 0.5	0.5	< 2.17	2.17		1	9/17/2018	100-41-4
m&p-Xylene	< 1.0	1.0	< 4.34	4.34		1	9/17/2018	179601-23-1
Methylene chloride	< 2.0	2.0	< 6.94	6.94		1	9/17/2018	75-09-2
o-Xylene	< 0.5	0.5	< 2.17	2.17		1	9/17/2018	95-47-6
Tetrachloroethene	< 1.0	1.0	< 6.78	6.78		1	9/17/2018	127-18-4
Tetrahydrofuran	< 2.0	2.0	< 5.90	5.90		1	9/17/2018	109-99-9
Toluene	< 0.5	0.5	< 1.89	1.89		1	9/17/2018	108-88-3
trans-1,2-Dichloroethene	< 0.5	0.5	< 1.98	1.98		1	9/17/2018	156-60-5
Trichloroethene	< 0.5	0.5	< 2.69	2.69		1	9/17/2018	79-01-6
Trichlorofluoromethane(F-11)	< 0.5	0.5	< 2.81	2.81		1	9/17/2018	75-69-4
Trichlorotrifluoroethane(F-113)	< 0.5	0.5	< 3.83	3.83		1	9/17/2018	76-13-1
Vinyl chloride	< 0.5	0.5	< 1.28	1.28		1	9/17/2018	75-01-4
Surr: 4-Bromofluorobenzene	86.5	70-130	%REC					

Airtech Environmental Laboratories (AEL) - AZ 0740

4620 E.Elwood St., Suite 13, Phoenix, AZ 85040 480-968-5888 Fax 480-966-1888

Client:	Wood	**Client Sample ID:**	N/A
Project:	Cave Creek Landfill	**Project Number:**	14-2017-2034
Lab Order:	18I008	**Collection:**	N/A
Lab ID:	LCS/LCSD	**Matrix:**	Nitrogen

Method QC Data

Date Analyzed: 9/17/2018 Batch: MS010917 Analyst: JJ

Analyses	LCS Result	LCS %REC	LCSD Result	LCSD %REC	T.V.	%RPD	Unit	Qualifier LCS	Qualifier LCSD	Qualifier RPD
VOLATILE ORGANICS IN AIR	**TO-15**							70-130%		<25%
Dichlorodifluoromethane(F-12)	8.3	83.2	8.2	81.5	10.0	2.1	ppbv			
Vinyl Chloride	8.8	88.0	8.3	82.9	10.0	6.0	ppbv			
Trichlorofluoromethane (F-11)	9.2	91.7	8.8	88.3	10.0	3.8	ppbv			
Acetone	8.3	82.7	7.9	78.6	10.0	5.1	ppbv			
1,1-Dichloroethene	8.4	84.3	8.1	81.4	10.0	3.5	ppbv			
Trichlorotrifluoroethane (F-113)	9.5	94.6	9.2	91.7	10.0	3.1	ppbv			
Methylene Chloride	8.3	82.9	7.7	76.7	10.0	7.8	ppbv			
trans-1,2-Dichloroethene	9.3	93.1	9.1	90.6	10.0	2.7	ppbv			
1,1-Dichloroethane	8.6	85.9	8.2	82.2	10.0	4.4	ppbv			
2-Butanone (MEK)	8.7	87.2	8.7	86.6	10.0	0.7	ppbv			
cis-1,2-Dichloroethene	9.7	97.0	9.6	95.7	10.0	1.3	ppbv			
Chloroform	8.7	87.1	8.4	83.5	10.0	4.2	ppbv			
Tetrahydrofuran	7.4	74.0	7.0	70.0	10.0	5.6	ppbv			
1,2-Dichloroethane	8.1	81.2	7.8	78.0	10.0	4.0	ppbv			
Benzene	8.8	88.3	8.7	86.7	10.0	1.8	ppbv			
Trichloroethene	10.5	105	9.9	98.9	10.0	5.7	ppbv			
Toluene	10.1	101	9.7	97.3	10.0	4.1	ppbv			
Tetrachloroethene	11.0	110	10.5	105	10.0	4.8	ppbv			
Chlorobenzene	10.2	102	9.8	98.0	10.0	4.4	ppbv			
Ethylbenzene	11.5	115	10.8	108	10.0	6.8	ppbv			
m&p-Xylene	23.2	116	21.5	108	20.0	7.6	ppbv			
o-Xylene	11.1	111	10.4	104	10.0	6.8	ppbv			
1,2-Dichlorobenzene	12.8	128	11.7	117	10.0	8.7	ppbv			
Surr: 4-Bromofluorobenzene	9.7	96.6	9.6	95.7			%REC			
		70-130%		70-130%						

Airtech Environmental Laboratories (AEL) - AZ 0740

4620 E.Elwood St., Suite 13, Phoenix, AZ 85040 480-968-5888 Fax 480-966-1888

Client:	Wood	**Client Sample ID:**	N/A
Project:	Cave Creek Landfill	**Project Number:**	14-2017-2034
Lab Order:	18I008	**Collection:**	N/A
Lab ID:	Blank	**Matrix:**	Nitrogen

Method QC Data

Batch: MS010919 Analyst: JJ

Analyses	ppbv Result	ppbv Limit	ug/M^3 Result	ug/M^3 Limit	Qual	DF	Date Analyzed	CAS#
VOLATILE ORGANICS IN AIR		**TO-15**					Analyst: JJ	
1,1-Dichloroethane	< 0.5	0.5	< 2.03	2.03		1	9/19/2018	75-34-3
1,1-Dichloroethene	< 0.5	0.5	< 1.99	1.99		1	9/19/2018	75-35-4
1,2-Dichlorobenzene	< 0.5	0.5	< 3.01	3.01		1	9/19/2018	95-50-1
1,2-Dichloroethane	< 0.5	0.5	< 2.03	2.03		1	9/19/2018	107-06-2
2-Butanone (MEK)	< 5.0	5.0	< 14.8	14.8		1	9/19/2018	78-93-3
Acetone	< 5.0	5.0	< 11.9	11.9		1	9/19/2018	67-64-1
Benzene	< 0.5	0.5	< 1.60	1.60		1	9/19/2018	71-43-2
Chlorobenzene	< 0.5	0.5	< 2.30	2.30		1	9/19/2018	108-90-7
Chloroform	< 0.5	0.5	< 2.44	2.44		1	9/19/2018	67-66-3
cis-1,2-Dichloroethene	< 0.5	0.5	< 1.98	1.98		1	9/19/2018	156-59-2
Dichlorodifluoromethane(F-12)	< 1.0	1.0	< 4.95	4.95		1	9/19/2018	75-71-8
Ethylbenzene	< 0.5	0.5	< 2.17	2.17		1	9/19/2018	100-41-4
m&p-Xylene	< 1.0	1.0	< 4.34	4.34		1	9/19/2018	179601-23-1
Methylene chloride	< 2.0	2.0	< 6.94	6.94		1	9/19/2018	75-09-2
o-Xylene	< 0.5	0.5	< 2.17	2.17		1	9/19/2018	95-47-6
Tetrachloroethene	< 1.0	1.0	< 6.78	6.78		1	9/19/2018	127-18-4
Tetrahydrofuran	< 2.0	2.0	< 5.90	5.90		1	9/19/2018	109-99-9
Toluene	< 0.5	0.5	< 1.89	1.89		1	9/19/2018	108-88-3
trans-1,2-Dichloroethene	< 0.5	0.5	< 1.98	1.98		1	9/19/2018	156-60-5
Trichloroethene	< 0.5	0.5	< 2.69	2.69		1	9/19/2018	79-01-6
Trichlorofluoromethane(F-11)	< 0.5	0.5	< 2.81	2.81		1	9/19/2018	75-69-4
Trichlorotrifluoroethane(F-113)	< 0.5	0.5	< 3.83	3.83		1	9/19/2018	76-13-1
Vinyl chloride	< 0.5	0.5	< 1.28	1.28		1	9/19/2018	75-01-4
Surr: 4-Bromofluorobenzene	90.7	70-130	%REC					

Airtech Environmental Laboratories (AEL) - AZ 0740

4620 E.Elwood St., Suite 13, Phoenix, AZ 85040 480-968-5888 Fax 480-966-1888

Client:	Wood	**Client Sample ID:**	N/A
Project:	Cave Creek Landfill	**Project Number:**	14-2017-2034
Lab Order:	18I008	**Collection:**	N/A
Lab ID:	LCS/LCSD	**Matrix:**	Nitrogen

Method QC Data

Date Analyzed: 9/19/2018 Batch: MS010919 Analyst: JJ

Analyses	LCS Result	LCS %REC	LCSD Result	LCSD %REC	T.V.	%RPD	Unit	Qualifier LCS	Qualifier LCSD	Qualifier RPD
VOLATILE ORGANICS IN AIR	**TO-15**							70-130%		<25%
Dichlorodifluoromethane(F-12)	9.5	95.2	9.5	94.6	10.0	0.6	ppbv			
Vinyl Chloride	10.1	101	8.9	88.7	10.0	12.9	ppbv			
Trichlorofluoromethane (F-11)	9.8	98.1	8.7	86.9	10.0	12.1	ppbv			
Acetone	7.9	79.2	7.7	77.3	10.0	2.4	ppbv			
1,1-Dichloroethene	10.4	104	9.4	94.0	10.0	10.4	ppbv			
Trichlorotrifluoroethane (F-113)	9.9	98.6	8.9	89.0	10.0	10.2	ppbv			
Methylene Chloride	9.6	96.4	8.5	85.4	10.0	12.1	ppbv			
trans-1,2-Dichloroethene	10.3	103	9.7	96.5	10.0	6.1	ppbv			
1,1-Dichloroethane	10.2	102	8.9	88.7	10.0	13.9	ppbv			
2-Butanone (MEK)	9.0	90.3	8.1	80.8	10.0	11.1	ppbv			
cis-1,2-Dichloroethene	10.4	104	9.4	93.6	10.0	10.0	ppbv			
Chloroform	9.5	94.9	8.5	85.0	10.0	11.0	ppbv			
Tetrahydrofuran	9.2	91.9	8.7	87.4	10.0	5.0	ppbv			
1,2-Dichloroethane	9.8	98.2	8.5	85.0	10.0	14.4	ppbv			
Benzene	10.7	107	9.3	92.9	10.0	13.9	ppbv			
Trichloroethene	8.9	88.8	8.2	81.5	10.0	8.6	ppbv			
Toluene	9.2	92.4	8.6	86.3	10.0	6.8	ppbv			
Tetrachloroethene	9.0	90.1	8.2	81.5	10.0	10.0	ppbv			
Chlorobenzene	8.8	87.9	8.0	80.1	10.0	9.3	ppbv			
Ethylbenzene	8.1	80.5	7.5	75.3	10.0	6.7	ppbv			
m&p-Xylene	16.4	82.2	15.1	75.7	20.0	8.2	ppbv			
o-Xylene	9.2	91.6	8.5	84.5	10.0	8.1	ppbv			
1,2-Dichlorobenzene	9.6	96.1	8.8	87.9	10.0	8.9	ppbv			
Surr: 4-Bromofluorobenzene	10.1	101	10.2	102			%REC			
		70-130%		70-130%						

Airtech Environmental Laboratories (AEL) - AZ 0740

4620 E.Elwood St., Suite 13, Phoenix, AZ 85040 480-968-5888 Fax 480-966-1888

Client:	Wood	**Client Sample ID:**	N/A
Project:	Cave Creek Landfill	**Project Number:**	14-2017-2034
Lab Order:	18I008	**Collection:**	N/A
Lab ID:	Blank	**Matrix:**	Nitrogen

Method QC Data

Batch: MS010920 Analyst: JJ

Analyses	ppbv Result	ppbv Limit	ug/M^3 Result	ug/M^3 Limit	Qual	DF	Date Analyzed	CAS#
VOLATILE ORGANICS IN AIR		**TO-15**					Analyst: JJ	
1,1-Dichloroethane	< 0.5	0.5	< 2.03	2.03		1	9/20/2018	75-34-3
1,1-Dichloroethene	< 0.5	0.5	< 1.99	1.99		1	9/20/2018	75-35-4
1,2-Dichlorobenzene	< 0.5	0.5	< 3.01	3.01		1	9/20/2018	95-50-1
1,2-Dichloroethane	< 0.5	0.5	< 2.03	2.03		1	9/20/2018	107-06-2
2-Butanone (MEK)	< 5.0	5.0	< 14.8	14.8		1	9/20/2018	78-93-3
Acetone	< 5.0	5.0	< 11.9	11.9		1	9/20/2018	67-64-1
Benzene	< 0.5	0.5	< 1.60	1.60		1	9/20/2018	71-43-2
Chlorobenzene	< 0.5	0.5	< 2.30	2.30		1	9/20/2018	108-90-7
Chloroform	< 0.5	0.5	< 2.44	2.44		1	9/20/2018	67-66-3
cis-1,2-Dichloroethene	< 0.5	0.5	< 1.98	1.98		1	9/20/2018	156-59-2
Dichlorodifluoromethane(F-12)	< 1.0	1.0	< 4.95	4.95		1	9/20/2018	75-71-8
Ethylbenzene	< 0.5	0.5	< 2.17	2.17		1	9/20/2018	100-41-4
m&p-Xylene	< 1.0	1.0	< 4.34	4.34		1	9/20/2018	179601-23-1
Methylene chloride	< 2.0	2.0	< 6.94	6.94		1	9/20/2018	75-09-2
o-Xylene	< 0.5	0.5	< 2.17	2.17		1	9/20/2018	95-47-6
Tetrachloroethene	< 1.0	1.0	< 6.78	6.78		1	9/20/2018	127-18-4
Tetrahydrofuran	< 2.0	2.0	< 5.90	5.90		1	9/20/2018	109-99-9
Toluene	< 0.5	0.5	< 1.89	1.89		1	9/20/2018	108-88-3
trans-1,2-Dichloroethene	< 0.5	0.5	< 1.98	1.98		1	9/20/2018	156-60-5
Trichloroethene	< 0.5	0.5	< 2.69	2.69		1	9/20/2018	79-01-6
Trichlorofluoromethane(F-11)	< 0.5	0.5	< 2.81	2.81		1	9/20/2018	75-69-4
Trichlorotrifluoroethane(F-113)	< 0.5	0.5	< 3.83	3.83		1	9/20/2018	76-13-1
Vinyl chloride	< 0.5	0.5	< 1.28	1.28		1	9/20/2018	75-01-4
Surr: 4-Bromofluorobenzene	90.4	70-130	%REC					

Airtech Environmental Laboratories (AEL) - AZ 0740

4620 E.Elwood St., Suite 13, Phoenix, AZ 85040 480-968-5888 Fax 480-966-1888

Client:	Wood	**Client Sample ID:**	N/A
Project:	Cave Creek Landfill	**Project Number:**	14-2017-2034
Lab Order:	18I008	**Collection:**	N/A
Lab ID:	LCS/LCSD	**Matrix:**	Nitrogen

Method QC Data

Date Analyzed: 9/20/2018 Batch: MS010920 Analyst: JJ

Analyses	LCS Result	LCS %REC	LCSD Result	LCSD %REC	T.V.	%RPD	Unit	Qualifier LCS	Qualifier LCSD	Qualifier RPD
VOLATILE ORGANICS IN AIR	**TO-15**							70-130%		<25%
Dichlorodifluoromethane(F-12)	11.0	110	10.9	109	10.0	0.8	ppbv			
Vinyl Chloride	9.8	97.9	9.7	96.6	10.0	1.3	ppbv			
Trichlorofluoromethane (F-11)	10.6	106	10.4	104	10.0	1.6	ppbv			
Acetone	9.4	94.2	9.1	90.7	10.0	3.8	ppbv			
1,1-Dichloroethene	10.5	105	10.5	105	10.0	0.2	ppbv			
Trichlorotrifluoroethane (F-113)	10.3	103	10.5	105	10.0	1.8	ppbv			
Methylene Chloride	9.7	96.6	9.3	93.1	10.0	3.7	ppbv			
trans-1,2-Dichloroethene	10.9	109	11.0	110	10.0	1.5	ppbv			
1,1-Dichloroethane	10.2	102	10.0	99.5	10.0	2.2	ppbv			
2-Butanone (MEK)	10.2	102	10.3	103	10.0	1.1	ppbv			
cis-1,2-Dichloroethene	11.0	110	11.2	112	10.0	2.0	ppbv			
Chloroform	10.0	100	10.2	102	10.0	1.5	ppbv			
Tetrahydrofuran	9.9	99.0	9.3	92.8	10.0	6.5	ppbv			
1,2-Dichloroethane	9.3	92.8	9.0	89.6	10.0	3.5	ppbv			
Benzene	10.1	101	9.9	98.6	10.0	2.2	ppbv			
Trichloroethene	11.6	116	11.5	115	10.0	1.3	ppbv			
Toluene	12.2	122	11.7	117	10.0	4.5	ppbv			
Tetrachloroethene	12.1	121	11.7	117	10.0	3.8	ppbv			
Chlorobenzene	10.5	105	10.7	107	10.0	1.1	ppbv			
Ethylbenzene	10.1	101	10.1	101	10.0	0.2	ppbv			
m&p-Xylene	20.5	102	20.4	102	20.0	0.1	ppbv			
o-Xylene	11.3	113	11.3	113	10.0	0.1	ppbv			
1,2-Dichlorobenzene	12.5	125	12.3	123	10.0	1.3	ppbv			
Surr: 4-Bromofluorobenzene	10.1	101	10.1	101			%REC			
		70-130%		70-130%						

Airtech Environmental Laboratories (AEL) - AZ 0740

4620 E.Elwood St., Suite 13, Phoenix, AZ 85040 480-968-5888 Fax 480-966-1888

Client:	Wood	**Client Sample ID:**	NA
Project:	Cave Creek Landfill	**Project Number:**	14-2017-2034
Lab Order:	18I008	**Collection:**	NA
Lab ID:	Standards	**Matrix:**	Nitrogen

AEL ID#	STD Name	Vendor	SGI Order#	Description	CONC.	Accuracy	Exp.Date
S-180620-03	Stock	Spectra Gases	116447993	TO-14 39 Analytes	1.0 ppmv	± 5%	6/25/2019
S-180620-02	Stock	Spectra Gases	116447993	TO-15 25 Analytes	1.0 ppmv	± 5%	6/22/2019
S-180620-01	Stock	Spectra Gases	116447993	15 Additional Compounds	1.0 ppmv	± 5%	6/20/2019
S-171019-01	Stock	Spectra Gases	114560630	TO-15 IS 4 Compounds	1.0 ppmv	± 5%	10/19/2018
A-180913-01	Working Std	AEL Dilution		TO-15 74 Analytes	10 ppbv	± 5%	12/13/2018
A-180910-01	Working IS	AEL Dilution		TO-15 IS 4 Compounds	50 ppbv	± 5%	10/19/2018

Airtech Environmental Laboratories (AEL)

Chain of Custody

4620 E.Elwood Street, Suite 13, Phoenix, AZ 85040 480-968-5888 (phone) 480-966-1888 (fax)

Customer : Wood.	Page 1 of 3		AEL Lab #
Address: 4600 East Washington Street, Suite #600	Sampler: Eric Miller	Phone: (602) 300-8313	18I008
	Project Name: Cave Creek Landfill	Project Number: 14-2017-2034	
City, State, Zip: Phoenix, AZ 85034	Project location: Cave Creek, AZ		
Contact: Natalie Chrisman	P.O. Number:		
Phone: (602) 733-6000 Fax: (602) 733-6100	Fax Results: Y N		
E-Mail Address: Natalie.Chrisman@amecfw.com	E-Mail Results: Y N		

Sample Receipt

Temperature_____ °C
Custody Seals: Yes_____ No_____
Custody Seals Intact: Yes_____ No_____
Total # of Containers:_____

Turn Around Request

_____ 24 Hours _____ 48 Hours
_____ 72 Hours
_____ 5 working Day
Y Standard 10 Working Days

Sample Type

SVE: soil vapor extraction
A: ambient air
I: indoor air
S: soil vapor
W: water
GW: ground water
WW: waste water

Analyses Requested

Sample Information

AEL Lab #	Serial # Canister	Serial # Grab	Canister (L) or bag	Grab (Min)	Client's Sample Identification	Sampled Date	Sampled Time	Sample Type	Number of Containers	TO-15 ~~full list~~ (SHORT LIST)	TO-15 TPH(GRO)	TO-15 Selet List	8260B AZ Vapor full list	8260B Vapor select list	8015 GRO	8260B Water			DFA tracer cmpd. as TIC
01	E2294	068	6 1 bag	1 2 5	TSSV-7D-SG-090818	9.8.18	821	S	1	Y									Y
02	E2398	202	6 1 bag	1 2 5	TSSV-7PZ-SG-090818		922			Y									Y
03	E2390	117	6 1 bag	1 2 5	TSSV-1S-SG-090818		951			Y									Y
04	1888	007	6 1 bag	1 2 5	TSSV-1M-SG-090818		1013			Y									Y
05	1867	047	6 1 bag	1 2 5	TSSV-1D-SG-090818		1037			Y									Y
06	1869	031	6 1 bag	1 2 5	DUP03-090818		1045			Y									Y
07	0606	137	6 1 bag	1 2 5	TSSV-2S-SG-090818		1116			Y									Y
08	0265	201	6 1 bag	1 2 5	TSSV-2M-SG-090818		1141			Y									Y
09	E2365	062	6 1 bag	1 2 5	TSSV-2D-SG-090818		1206			Y									Y
10	E2088	193	6 1 bag	1 2 5	TSSV-2PZ-SG-090818		1229			Y									Y

Instructions / Special Requirements:

Date:	Time:	Samples Relinquished By:	Received By:
9.12.18	1537	E. Miller	Jam Jam - Airtech

Airtech Environmental Laboratories (AEL)

Chain of Custody

4620 E.Elwood Street, Suite 13, Phoenix, AZ 85040 480-968-5888 (phone) 480-966-1888 (fax)

Customer : Wood.	Page 2 of 3		AEL Lab #
Address: 4600 East Washington Street, Suite #600	Sampler: Eric Miller	Phone: (602) 300-8313	18I008
	Project Name: Cave Creek Landfill	Project Number: 14-2017-2034	
City, State, Zip: Phoenix, AZ 85034	Project location: Cave Creek, AZ		
Contact: Natalie Chrisman	P.O. Number:		
Phone: (602) 733-6000 Fax: (602) 733-6100	Fax Results: Y N		
E-Mail Address: Natalie.Chrisman@amecfw.com	E-Mail Results: (Y) N		

Sample Receipt

Temperature_____ °C

Custody Seals: Yes_____ No_____

Custody Seals Intact: Yes_____ No_____

Total # of Containers:_____

Turn Around Request

_____ 24 Hours _____ 48 Hours

_____ 72 Hours

_____ 5 working Day

X Standard 10 Working Days

Sample Type

SVE: soil vapor extraction **GW:** ground water

A: ambient air **WW:** waste water

I: indoor air

S: soil vapor

W: water

Sample Information

AEL Lab #	Serial # Canister	Serial # Grab	Canister (L) or bag	Grab (Min)	Client's Sample Identification	Sampled Date	Sampled Time	Sample Type	Number of Containers	TO-15 full list (SHORT LIST)	TO-15 TPH(GRO)	TO-15 Selet List	8260B AZ Vapor full list	8260B Vapor select list	8015 GRO	8260B Water			DFA tracer cmpd. as TIC
11	1842	023	6 (1) bag	(1) 2 5	SVE-1S-SG-091018	9.10.18	835	S	1	X									X
12	1805	144	6 (1) bag	(1) 2 5	SVE-1M-SG-091018	↓	858	↓	↓	X									X
13	E2350	105	6 (1) bag	(1) 2 5	SVE-1D-SG-091018	↓	926	↓	↓	X									X
14	1848	063	6 (1) bag	(1) 2 5	SVE-2S-SG-091018	↓	959	↓	↓	X									X
15	1837	135	6 (1) bag	(1) 2 5	SVE-2M-SG-091018	↓	1026	↓	↓	X									X
16	1843	194	6 (1) bag	(1) 2 5	TSSV-4M-SG-091018	↓	1156	↓	↓	X									X
17	1872	035	6 (1) bag	(1) 2 5	TSSV-4AZ-SG-091018	↓	1236	↓	↓	X									X
18	1829	191	6 (1) bag	(1) 2 5	TSSV-4D-SG-091018	↓	1331	↓	↓	X									X
19	1873	014	6 (1) bag	(1) 2 5	TSSV-5AZ-SG-091218	9.12.18	1046	↓	↓	X									X
20	1870	012	6 (1) bag	(1) 2 5	SVE-3S-SG-091218	↓	1113	↓	↓	X									X

Instructions / Special Requirements:

Date:	Time:	Samples Relinquished By:	Received By:
9.12.18	1537	E. Miller	Jamie Jam - Airtech

Airtech Environmental Laboratories (AEL)

Chain of Custody

4620 E.Elwood Street, Suite 13, Phoenix, AZ 85040 480-968-5888 (phone) 480-966-1888 (fax)

Customer : Wood.	Page 3 of 3		AEL Lab #
Address: 4600 East Washington Street, Suite #600	Sampler: Eric Miller	Phone: (602) 300-8313	18I008
	Project Name: Cave Creek Landfill	Project Number: 14-2017-2034	
City, State, Zip: Phoenix, AZ 85034	Project location: Cave Creek, AZ		
Contact: Natalie Chrisman	P.O. Number:		
Phone: (602) 733-6000 Fax: (602) 733-6100	Fax Results: Y N		
E-Mail Address: Natalie.Chrisman@amecfw.com	E-Mail Results: Y N		

Sample Receipt

Temperature_____ °C

Custody Seals: Yes_____ No_____

Custody Seals Intact: Yes_____ No_____

Total # of Containers:_____

Turn Around Request

_____ 24 Hours _____ 48 Hours

_____ 72 Hours

_____ 5 working Day

X Standard 10 Working Days

Sample Type

SVE: soil vapor extraction GW: ground water

A: ambient air WW: waste water

I: indoor air

S: soil vapor

W: water

Sample Information

AEL Lab #	Serial # Canister	Serial # Grab	Canister (L) or bag	Grab (Min)	Client's Sample Identification	Sampled Date	Sampled Time	Sample Type	Number of Containers	TO-15 full list (SHORTLIST)	TO-15 TPH(GRO)	TO-15 Selet List	8260B AZ Vapor full list	8260B Vapor select list	8015 GRO	8260B Water			DFA tracer cmpd. as TIC
21	E2356	195	6 1 bag	1 2 5	SVE-3M-SG-091218	9.12.18	1136	S	1	X									X
22	1796	065	6 1 bag	1 2 5	SVE-3-SG-091218	↓	1147	↓	↓	X									X
23	E2285	021	6 1 bag	1 2 5	SVE-4S-SG-091218	↓	1215	↓	↓	X									X
24	E2363	123	6 1 bag	1 2 5	SVE-4M-SG-091218	↓	1239	↓	↓	X									X
25	E2361	030	6 1 bag	1 2 5	SVE-4-SG-091218	↓	1251	↓	↓	X									X
26	E2283	086	6 1 bag	1 2 5	SVE-2-SG-091218	↓	1317	↓	↓	X									X
27	E2281	158	6 1 bag	1 2 5	TSSV-PW-SG-091218	↓	1338	↓	↓	X									X
28	E2288	196	6 1 bag	1 2 5	SVE-1-SG-091218	↓	1357	↓	↓	X									X
			6 1 bag	1 2 5															
			6 1 bag	1 2 5															

Instructions / Special Requirements:

Date:	Time:	Samples Relinquished By:	Received By:
9.12.18	1537	E. Miller	James Jones - Airtech

SVE PROCESS

Airtech Environmental Laboratories (AEL)
4620 E.Elwood St., Suite 13, Phoenix, AZ 85040 480-968-5888 Fax 480-966-1888

Date: June 6, 2018

Client:	Natalie Chrisman	Work Order #:	18G019
Company:	Wood.	Project Name:	Cave Creek Landfill
Address:	4600 E Washington St, Ste 600	Project Number:	14-2014-2034
	Phoenix, AZ 85034	Received Date:	7/18/2018

Dear Client:

Airtech Environmental Laboratories received four (4) samples for analysis.

All analyses met laboratory QA/QC with any exceptions addressed in the Case Narrative.

If you have any questions or concerns regarding your samples analysis, please contact the laboratory at 480-968-5888

Sincerely,

Yu Min Shi
Technical Director
Airtech Environmental Labs

Arizona ADHS License No. AZ0740

Airtech Environmental Laboratories (AEL)

4620 E.Elwood St., Suite 13, Phoenix, AZ 85040 480-968-5888 Fax 480-966-1888

Date: June 6, 2018

Client:	Natalie Chrisman	Work Order #:	18G019
Company:	Wood.	Project Name:	Cave Creek Landfill
Address:	4600 E Washington St, Ste 600	Project Number:	14-2014-2034
	Phoenix, AZ 85034	Received Date:	7/18/2018

SAMPLE SUMMARY

LAB ID	CLIENT ID	METHOD	SAMPLE DATE	SAMPLE TIME
18G019-01	SP4-H1-071818	TO-15	7/18/2018	1110
18G019-02	SP3-C3-071818	TO-15	7/18/2018	1115
18G019-03	SP2-C2-071818	TO-15	7/18/2018	1120
18G019-04	SP1-SkidOutlet-071818	TO-15	7/18/2018	1125

Airtech Environmental Laboratories (AEL)
4620 E.Elwood St., Suite 13, Phoenix, AZ 85040 480-968-5888 Fax 480-966-1888

Date: June 6, 2018

Client:	Natalie Chrisman	Work Order #:	18G019
Company:	Wood.	Project Name:	Cave Creek Landfill
Address:	4600 E Washington St, Ste 600	Project Number:	14-2014-2034
	Phoenix, AZ 85034	Received Date:	07/18/18

Case Narrative

All samples and QC associated with your samples met the quality control objectives.
Data qualifiers in this report are in accordance with ADEQ Data Qualifiers.

Airtech Environmental Laboratories (AEL) - AZ 0740

4620 E.Elwood St., Suite 13, Phoenix, AZ 85040 480-968-5888 Fax 480-966-1888

Client:	Wood.	**Client Sample ID:**	N/A
Project:	Cave Creek Landfill	**Project Number:**	14-2014-2034
Lab Order:	18G019	**Collection:**	N/A
Lab ID:	Kits QC	**Matrix:**	Air

		Canister				Grab Sampler	
		Type		Vacuum	Pressure	Type	
	Client	1.0 liter		before sampled	after sampled	1 minute-fill 1.0L canister	
AEL#	ID	SN#	Clean Batch#	Hg inch	psia	SN#	Clean Batch#
18G019-01	SP4-H1-071818	E2101	1806-19	29.0	13.56	171	1806-06
18G019-02	SP3-C3-071818	1839	1806-19	29.0	14.00	065	1806-06
18G019-03	SP2-C2-071818	1830	1806-19	29.0	14.28	158	1806-06
18G019-04	SP1-SkidOutlet-071818	1845	1806-19	29.0	14.43	072	1806-06

Airtech Environmental Laboratories (AEL) - AZ 0740

4620 E.Elwood St., Suite 13, Phoenix, AZ 85040 480-968-5888 Fax 480-966-1888

Client:	Wood.	**Client Sample ID:**	SP4-H1-071818
Project:	Cave Creek Landfill	**Project Number:**	14-2014-2034
Lab Order:	18G019	**Collection:**	7/18/2018
Lab ID:	01	**Matrix:**	Soil vapor

	ppbv		ug/M^3				Date	
Analyses	**Result**	**Limit**	**Result**	**Limit**	**Qual**	**DF**	**Analyzed**	**CAS#**
VOLATILE ORGANICS IN AIR	**TO-15**						Analyst: JJ	
1,1-Dichloroethane	< 500	500	< 2,025	2,025		1,000	8/2/2018	75-34-3
1,1-Dichloroethene	< 500	500	< 1,985	1,985		1,000	8/2/2018	75-35-4
1,2-Dichlorobenzene	< 500	500	< 3,005	3,005		1,000	8/2/2018	95-50-1
1,2-Dichloroethane	< 500	500	< 2,025	2,025		1,000	8/2/2018	107-06-2
2-Butanone (MEK)	< 5,000	5,000	< 14,750	14,750		1,000	8/2/2018	78-93-3
Acetone	< 5,000	5,000	< 11,900	11,900		1,000	8/2/2018	67-64-1
Benzene	< 500	500	< 1,595	1,595		1,000	8/2/2018	71-43-2
Chlorobenzene	< 500	500	< 2,300	2,300		1,000	8/2/2018	108-90-7
Chloroform	< 500	500	< 2,440	2,440		1,000	8/2/2018	67-66-3
cis-1,2-Dichloroethene	< 500	500	< 1,980	1,980		1,000	8/2/2018	156-59-2
Dichlorodifluoromethane(F-12)	**1,360**	**1,000**	**6,732**	**4,950**		1,000	8/2/2018	75-71-8
Ethylbenzene	**540**	**500**	**2,344**	**2,170**		1,000	8/2/2018	100-41-4
m&p-Xylene	**2,110**	**1,000**	**9,157**	**4,340**		1,000	8/2/2018	179601-23-1
Methylene chloride	**91,800**	**8,000**	**318,500**	**27,760**		4,000	8/2/2018	75-09-2
o-Xylene	**540**	**500**	**2,344**	**2,170**		1,000	8/2/2018	95-47-6
Tetrachloroethene	< 1,000	1,000	< 6,780	6,780		1,000	8/2/2018	127-18-4
Tetrahydrofuran	< 2,000	2,000	< 5,900	5,900		1,000	8/2/2018	109-99-9
Toluene	**1,240**	**500**	**4,675**	**1,885**		1,000	8/2/2018	108-88-3
trans-1,2-Dichloroethene	< 500	500	< 1,980	1,980		1,000	8/2/2018	156-60-5
Trichloroethene	< 500	500	< 2,685	2,685		1,000	8/2/2018	79-01-6
Trichlorofluoromethane(F-11)	< 500	500	< 2,810	2,810		1,000	8/2/2018	75-69-4
Trichlorotrifluoroethane(F-113)	< 500	500	< 3,830	3,830		1,000	8/2/2018	76-13-1
Vinyl chloride	< 500	500	< 1,280	1,280		1,000	8/2/2018	75-01-4
Surr: 4-Bromofluorobenzene	84.8	70-130	%REC					

Airtech Environmental Laboratories (AEL) - AZ 0740

4620 E.Elwood St., Suite 13, Phoenix, AZ 85040 480-968-5888 Fax 480-966-1888

Client:	Wood.	**Client Sample ID:**	SP3-C3-071818
Project:	Cave Creek Landfill	**Project Number:**	14-2014-2034
Lab Order:	18G019	**Collection:**	7/18/2018
Lab ID:	02	**Matrix:**	Soil vapor

	ppbv		ug/M^3				Date	
Analyses	**Result**	**Limit**	**Result**	**Limit**	**Qual**	**DF**	**Analyzed**	**CAS#**
VOLATILE ORGANICS IN AIR	**TO-15**						Analyst: JJ	
1,1-Dichloroethane	< 500	500	< 2,025	2,025		1,000	8/1/2018	75-34-3
1,1-Dichloroethene	< 500	500	< 1,985	1,985		1,000	8/1/2018	75-35-4
1,2-Dichlorobenzene	< 500	500	< 3,005	3,005		1,000	8/1/2018	95-50-1
1,2-Dichloroethane	< 500	500	< 2,025	2,025		1,000	8/1/2018	107-06-2
2-Butanone (MEK)	< 5,000	5,000	< 14,750	14,750		1,000	8/1/2018	78-93-3
Acetone	< 5,000	5,000	< 11,900	11,900		1,000	8/1/2018	67-64-1
Benzene	< 500	500	< 1,595	1,595		1,000	8/1/2018	71-43-2
Chlorobenzene	< 500	500	< 2,300	2,300		1,000	8/1/2018	108-90-7
Chloroform	< 500	500	< 2,440	2,440		1,000	8/1/2018	67-66-3
cis-1,2-Dichloroethene	< 500	500	< 1,980	1,980		1,000	8/1/2018	156-59-2
Dichlorodifluoromethane(F-12)	**1,430**	**1,000**	**7,079**	**4,950**		1,000	8/1/2018	75-71-8
Ethylbenzene	**500**	**500**	**2,170**	**2,170**		1,000	8/1/2018	100-41-4
m&p-Xylene	**1,990**	**1,000**	**8,637**	**4,340**		1,000	8/1/2018	179601-23-1
Methylene chloride	**84,500**	**4,000**	**293,200**	**13,880**		2,000	8/2/2018	75-09-2
o-Xylene	**500**	**500**	**2,170**	**2,170**		1,000	8/2/2018	95-47-6
Tetrachloroethene	< 1,000	1,000	< 6,780	6,780		1,000	8/2/2018	127-18-4
Tetrahydrofuran	< 2,000	2,000	< 5,900	5,900		1,000	8/2/2018	109-99-9
Toluene	**1,190**	**500**	**4,486**	**1,885**		1,000	8/2/2018	108-88-3
trans-1,2-Dichloroethene	< 500	500	< 1,980	1,980		1,000	8/2/2018	156-60-5
Trichloroethene	< 500	500	< 2,685	2,685		1,000	8/2/2018	79-01-6
Trichlorofluoromethane(F-11)	< 500	500	< 2,810	2,810		1,000	8/2/2018	75-69-4
Trichlorotrifluoroethane(F-113)	< 500	500	< 3,830	3,830		1,000	8/2/2018	76-13-1
Vinyl chloride	**1,320**	**500**	**3,379**	**1,280**		1,000	8/2/2018	75-01-4
Surr: 4-Bromofluorobenzene	83.6	70-130	%REC					

Airtech Environmental Laboratories (AEL) - AZ 0740

4620 E.Elwood St., Suite 13, Phoenix, AZ 85040 480-968-5888 Fax 480-966-1888

Client:	Wood.	**Client Sample ID:**	SP2-C2-071818
Project:	Cave Creek Landfill	**Project Number:**	14-2014-2034
Lab Order:	18G019	**Collection:**	7/18/2018
Lab ID:	03	**Matrix:**	Soil vapor

	ppbv		ug/M^3				Date	
Analyses	**Result**	**Limit**	**Result**	**Limit**	**Qual**	**DF**	**Analyzed**	**CAS#**
VOLATILE ORGANICS IN AIR	**TO-15**						Analyst: JJ	
1,1-Dichloroethane	< 500	500	< 2,025	2,025		1,000	8/2/2018	75-34-3
1,1-Dichloroethene	**76,800**	**1,000**	**304,900**	**3,970**		2,000	8/2/2018	75-35-4
1,2-Dichlorobenzene	< 500	500	< 3,005	3,005		1,000	8/2/2018	95-50-1
1,2-Dichloroethane	< 500	500	< 2,025	2,025		1,000	8/2/2018	107-06-2
2-Butanone (MEK)	< 5,000	5,000	< 14,750	14,750		1,000	8/2/2018	78-93-3
Acetone	< 5,000	5,000	< 11,900	11,900		1,000	8/2/2018	67-64-1
Benzene	< 500	500	< 1,595	1,595		1,000	8/2/2018	71-43-2
Chlorobenzene	< 500	500	< 2,300	2,300		1,000	8/2/2018	108-90-7
Chloroform	< 500	500	< 2,440	2,440		1,000	8/2/2018	67-66-3
cis-1,2-Dichloroethene	< 500	500	< 1,980	1,980		1,000	8/2/2018	156-59-2
Dichlorodifluoromethane(F-12)	**1,480**	**1,000**	**7,326**	**4,950**		1,000	8/2/2018	75-71-8
Ethylbenzene	< 500	500	< 2,170	2,170		1,000	8/2/2018	100-41-4
m&p-Xylene	< 1,000	1,000	< 4,340	4,340		1,000	8/2/2018	179601-23-1
Methylene chloride	**71,600**	**4,000**	**248,500**	**13,880**		2,000	8/2/2018	75-09-2
o-Xylene	< 500	500	< 2,170	2,170		1,000	8/2/2018	95-47-6
Tetrachloroethene	< 1,000	1,000	< 6,780	6,780		1,000	8/2/2018	127-18-4
Tetrahydrofuran	< 2,000	2,000	< 5,900	5,900		1,000	8/2/2018	109-99-9
Toluene	< 500	500	< 1,885	1,885		1,000	8/2/2018	108-88-3
trans-1,2-Dichloroethene	< 500	500	< 1,980	1,980		1,000	8/2/2018	156-60-5
Trichloroethene	< 500	500	< 2,685	2,685		1,000	8/2/2018	79-01-6
Trichlorofluoromethane(F-11)	**570**	**500**	**3,203**	**2,810**		1,000	8/2/2018	75-69-4
Trichlorotrifluoroethane(F-113)	< 500	500	< 3,830	3,830		1,000	8/2/2018	76-13-1
Vinyl chloride	**1,300**	**500**	**3,328**	**1,280**		1,000	8/2/2018	75-01-4
Surr: 4-Bromofluorobenzene	88.2	70-130	%REC					

Airtech Environmental Laboratories (AEL) - AZ 0740

4620 E.Elwood St., Suite 13, Phoenix, AZ 85040 480-968-5888 Fax 480-966-1888

Client:	Wood.	**Client Sample ID:**	SP1-SkidOutlet-071818
Project:	Cave Creek Landfill	**Project Number:**	14-2014-2034
Lab Order:	18G019	**Collection:**	7/18/2018
Lab ID:	04	**Matrix:**	Soil vapor

	ppbv		ug/M^3				Date	
Analyses	**Result**	**Limit**	**Result**	**Limit**	**Qual**	**DF**	**Analyzed**	**CAS#**
VOLATILE ORGANICS IN AIR	**TO-15**						Analyst: JJ	
1,1-Dichloroethane	< 1,000	1,000	< 4,050	4,050		2,000	8/2/2018	75-34-3
1,1-Dichloroethene	**48,300**	**1,000**	**191,800**	**3,970**		2,000	8/2/2018	75-35-4
1,2-Dichlorobenzene	< 1,000	1,000	< 6,010	6,010		2,000	8/2/2018	95-50-1
1,2-Dichloroethane	< 1,000	1,000	< 4,050	4,050		2,000	8/2/2018	107-06-2
2-Butanone (MEK)	< 10,000	10,000	< 29,500	29,500		2,000	8/2/2018	78-93-3
Acetone	< 10,000	10,000	< 23,800	23,800		2,000	8/2/2018	67-64-1
Benzene	< 1,000	1,000	< 3,190	3,190		2,000	8/2/2018	71-43-2
Chlorobenzene	**1,440**	**1,000**	**6,624**	**4,600**		2,000	8/2/2018	108-90-7
Chloroform	< 1,000	1,000	< 4,880	4,880		2,000	8/2/2018	67-66-3
cis-1,2-Dichloroethene	**9,820**	**1,000**	**38,890**	**3,960**		2,000	8/2/2018	156-59-2
Dichlorodifluoromethane(F-12)	< 2,000	2,000	< 9,900	9,900		2,000	8/2/2018	75-71-8
Ethylbenzene	< 1,000	1,000	< 4,340	4,340		2,000	8/2/2018	100-41-4
m&p-Xylene	< 2,000	2,000	< 8,680	8,680		2,000	8/2/2018	179601-23-1
Methylene chloride	**57,500**	**4,000**	**199,500**	**13,880**		2,000	8/2/2018	75-09-2
o-Xylene	< 1,000	1,000	< 4,340	4,340		2,000	8/2/2018	95-47-6
Tetrachloroethene	**13,200**	**2,000**	**89,500**	**13,560**		2,000	8/2/2018	127-18-4
Tetrahydrofuran	< 4,000	4,000	< 11,800	11,800		2,000	8/2/2018	109-99-9
Toluene	< 1,000	1,000	< 3,770	3,770		2,000	8/2/2018	108-88-3
trans-1,2-Dichloroethene	< 1,000	1,000	< 3,960	3,960		2,000	8/2/2018	156-60-5
Trichloroethene	**120,000**	**2,500**	**644,400**	**13,430**		5,000	8/2/2018	79-01-6
Trichlorofluoromethane(F-11)	< 1,000	1,000	< 5,620	5,620		2,000	8/2/2018	75-69-4
Trichlorotrifluoroethane(F-113)	**16,900**	**1,000**	**129,500**	**7,660**		2,000	8/2/2018	76-13-1
Vinyl chloride	**1,280**	**1,000**	**3,277**	**2,560**		2,000	8/2/2018	75-01-4
Surr: 4-Bromofluorobenzene	83.1	70-130	%REC					

Airtech Environmental Laboratories (AEL) - AZ 0740

4620 E.Elwood St., Suite 13, Phoenix, AZ 85040 480-968-5888 Fax 480-966-1888

Client:	Wood.	**Client Sample ID:**	N/A
Project:	Cave Creek Landfill	**Project Number:**	14-2014-2034
Lab Order:	18G019	**Collection:**	N/A
Lab ID:	Blank	**Matrix:**	Nitrogen

Method QC Data

Batch: MS010802 Analyst: JJ

Analyses	ppbv Result	ppbv Limit	ug/M^3 Result	ug/M^3 Limit	Qual	DF	Date Analyzed	CAS#
VOLATILE ORGANICS IN AIR		**TO-15**					Analyst: JJ	
1,1-Dichloroethane	< 0.5	0.5	< 2.03	2.03		1	8/2/2018	75-34-3
1,1-Dichloroethene	< 0.5	0.5	< 1.99	1.99		1	8/2/2018	75-35-4
1,2-Dichlorobenzene	< 0.5	0.5	< 3.01	3.01		1	8/2/2018	95-50-1
1,2-Dichloroethane	< 0.5	0.5	< 2.03	2.03		1	8/2/2018	107-06-2
2-Butanone (MEK)	< 5.0	5.0	< 14.8	14.8		1	8/2/2018	78-93-3
Acetone	< 5.0	5.0	< 11.9	11.9		1	8/2/2018	67-64-1
Benzene	< 0.5	0.5	< 1.60	1.60		1	8/2/2018	71-43-2
Chlorobenzene	< 0.5	0.5	< 2.30	2.30		1	8/2/2018	108-90-7
Chloroform	< 0.5	0.5	< 2.44	2.44		1	8/2/2018	67-66-3
cis-1,2-Dichloroethene	< 0.5	0.5	< 1.98	1.98		1	8/2/2018	156-59-2
Dichlorodifluoromethane(F-12)	< 1.0	1.0	< 4.95	4.95		1	8/2/2018	75-71-8
Ethylbenzene	< 0.5	0.5	< 2.17	2.17		1	8/2/2018	100-41-4
m&p-Xylene	< 1.0	1.0	< 4.34	4.34		1	8/2/2018	179601-23-1
Methylene chloride	< 2.0	2.0	< 6.94	6.94		1	8/2/2018	75-09-2
o-Xylene	< 0.5	0.5	< 2.17	2.17		1	8/2/2018	95-47-6
Tetrachloroethene	< 1.0	1.0	< 6.78	6.78		1	8/2/2018	127-18-4
Tetrahydrofuran	< 2.0	2.0	< 5.90	5.90		1	8/2/2018	109-99-9
Toluene	< 0.5	0.5	< 1.89	1.89		1	8/2/2018	108-88-3
trans-1,2-Dichloroethene	< 0.5	0.5	< 1.98	1.98		1	8/2/2018	156-60-5
Trichloroethene	< 0.5	0.5	< 2.69	2.69		1	8/2/2018	79-01-6
Trichlorofluoromethane(F-11)	< 0.5	0.5	< 2.81	2.81		1	8/2/2018	75-69-4
Trichlorotrifluoroethane(F-113)	< 0.5	0.5	< 3.83	3.83		1	8/2/2018	76-13-1
Vinyl chloride	< 0.5	0.5	< 1.28	1.28		1	8/2/2018	75-01-4
Surr: 4-Bromofluorobenzene	79.3	70-130	%REC					

Airtech Environmental Laboratories (AEL) - AZ 0740

4620 E.Elwood St., Suite 13, Phoenix, AZ 85040 480-968-5888 Fax 480-966-1888

Client:	Wood.	**Client Sample ID:**	N/A
Project:	Cave Creek Landfill	**Project Number:**	14-2014-2034
Lab Order:	18G019	**Collection:**	N/A
Lab ID:	LCS/LCSD	**Matrix:**	Nitrogen

Method QC Data

Date Analyzed: 8/2/2018 Batch: MS010802 Analyst: JJ

Analyses	LCS Result	LCS %REC	LCSD Result	LCSD %REC	T.V.	%RPD	Unit	Qualifier LCS	Qualifier LCSD	Qualifier RPD
VOLATILE ORGANICS IN AIR	**TO-15**							70-130%		<25%
Dichlorodifluoromethane(F-12)	8.0	80.3	8.7	86.7	10.0	7.7	ppbv			
Vinyl Chloride	11.0	110	10.4	104	10.0	5.4	ppbv			
Trichlorofluoromethane (F-11)	7.3	72.8	7.2	72.1	10.0	1.0	ppbv			
Acetone	11.0	110	11.0	110	10.0	0.0	ppbv			
1,1-Dichloroethene	8.0	80.2	8.2	81.5	10.0	1.6	ppbv			
Trichlorotrifluoroethane (F-113)	7.7	77.2	7.5	75.1	10.0	2.8	ppbv			
Methylene Chloride	8.6	86.2	8.6	86.0	10.0	0.2	ppbv			
trans-1,2-Dichloroethene	8.9	89.1	8.9	88.6	10.0	0.6	ppbv			
1,1-Dichloroethane	8.7	86.9	8.6	86.2	10.0	0.8	ppbv			
2-Butanone (MEK)	11.6	116	10.5	105	10.0	10.0	ppbv			
cis-1,2-Dichloroethene	9.0	90.0	8.7	87.0	10.0	3.4	ppbv			
Chloroform	7.8	77.6	7.7	76.8	10.0	1.0	ppbv			
Tetrahydrofuran	11.1	111	11.4	114	10.0	2.4	ppbv			
1,2-Dichloroethane	8.7	86.6	7.7	76.6	10.0	12.3	ppbv			
Benzene	11.0	110	9.4	93.7	10.0	15.8	ppbv			
Trichloroethene	7.6	75.7	7.9	78.7	10.0	3.9	ppbv			
Toluene	9.1	91.1	9.0	89.9	10.0	1.3	ppbv			
Tetrachloroethene	7.4	73.8	7.7	76.7	10.0	3.9	ppbv			
Chlorobenzene	8.7	87.0	8.4	83.5	10.0	4.1	ppbv			
Ethylbenzene	10.3	103	10.0	99.5	10.0	3.0	ppbv			
m&p-Xylene	22.3	111	20.9	104	20.0	6.7	ppbv			
o-Xylene	9.6	96.1	9.5	94.7	10.0	1.5	ppbv			
1,2-Dichlorobenzene	10.4	104	10.4	104	10.0	0.3	ppbv			
Surr: 4-Bromofluorobenzene	9.9	99.0	10.1	101			%REC			
		70-130%		70-130%						

Airtech Environmental Laboratories (AEL) - AZ 0740

4620 E.Elwood St., Suite 13, Phoenix, AZ 85040 480-968-5888 Fax 480-966-1888

Client:	Wood.	**Client Sample ID:**	NA
Project:	Cave Creek Landfill	**Project Number:**	14-2014-2034
Lab Order:	18G019	**Collection:**	NA
Lab ID:	Standards	**Matrix:**	Nitrogen

AEL ID#	STD Name	Vendor	SGI Order#	Description	CONC.	Accuracy	Exp.Date
S-180620-03	Stock	Spectra Gases	116447993	TO-14 39 Analytes	1.0 ppmv	± 5%	6/25/2019
S-180620-02	Stock	Spectra Gases	116447993	TO-15 25 Analytes	1.0 ppmv	± 5%	6/22/2019
S-180620-01	Stock	Spectra Gases	116447993	15 Additional Compounds	1.0 ppmv	± 5%	6/20/2019
S-171019-01	Stock	Spectra Gases	114560630	TO-15 IS 4 Compounds	1.0 ppmv	± 5%	10/19/2018
A-180730-01	Working Std	AEL Dilution		TO-15 74 Analytes	10 ppbv	± 5%	10/30/2018
A-180731-01	Working IS	AEL Dilution		TO-15 IS 4 Compounds	50 ppbv	± 5%	10/31/2018

Airtech Environmental Laboratories (AEL)

Chain of Custody

4620 E.Elwood Street, Suite 13, Phoenix, AZ 85040 480-968-5888 (phone) 480-966-1888 (fax)

Customer : Wood.	Page 1 of 1		AEL Lab #
Address: 4600 East Washington Street, Suite #600	Sampler: Eric Miller	Phone: (602) 300-8313	180019
	Project Name: Cave Creek Landfill	Project Number: 14-2017-2034	
City, State, Zip: Phoenix, AZ 85034	Project location: Cave Creek, AZ		
Contact: Natalie Chrisman	P.O. Number:		
Phone: (602) 733-6000 Fax: (602) 733-6100	Fax Results: Y N		
E-Mail Address: Natalie.Chrisman@amecfw.com	E-Mail Results: Y N		

Sample Receipt	Turn Around Request	Sample Type
Temperature_____ °C	____ 24 Hours ____ 48 Hours	SVE: soil vapor extraction GW: ground water
Custody Seals: Yes_____ No_____	____ 72 Hours	A: ambient air WW: waste water
Custody Seals Intact: Yes_____ No_____	____ 5 working Day	I: indoor air
Total # of Containers:_____	X Standard 10 Working Days	S: soil vapor
		W: water

Sample Information

AEL Lab #	Serial # Canister	Serial # Grab	Canister (L) or bag	Grab (Min)	Client's Sample Identification	Sampled Date	Sampled Time	Sample Type	Number of Containers	TO-15 full list	TO-15 TPH(GRO)	TO-15 Selet List	8260B AZ Vapor full list	8260B Vapor select list	8015 GRO	8260B Water			DFA tracer cmpd. as TIC
01	EZ101	171	6 1 bag	1 2 5	SP4-H1-071818	7.18.18	1110	SVE	1			X							
02	1839	065	6 1 bag	1 2 5	SP3-C3-071818	↓	1115	↓	↓			X							
03	1830	158	6 1 bag	1 2 5	SP2-C2-071818	↓	1120	↓	↓			X							
04	1845	072	6 1 bag	1 2 5	SP1-SKIDOUTLET-071818	↓	1125	↓	↓			X							
			6 1 bag	1 2 5															
			6 1 bag	1 2 5															
			6 1 bag	1 2 5															
			6 1 bag	1 2 5															
			6 1 bag	1 2 5															
			6 1 bag	1 2 5															

Instructions / Special Requirements:

Date:	Time:	Samples Relinquished By:	Received By:
7.18.18	1318	Eric Miller	Jane Jones-Airtech

Airtech Environmental Laboratories (AEL)

4620 E.Elwood St., Suite 13, Phoenix, AZ 85040 480-968-5888 Fax 480-966-1888

Date: August 30, 2018

Client:	Natalie Chrisman	Work Order #:	18H012
Company:	WOOD	Project Name:	Cave Creek Landfill
Address:	4600 E Washington St, #600	Project Number:	14-2014-2034
	Phoenix, AZ 85034	Received Date:	8/15/2018

Dear Client:

Airtech Environmental Laboratories received four (4) samples for analysis.

All analyses met laboratory QA/QC with any exceptions addressed in the Case Narrative.

If you have any questions or concerns regarding your samples analysis, please contact the laboratory at 480-968-5888

Sincerely,

Yu Min Shi
Technical Director
Airtech Environmental Labs

Arizona ADHS License No. AZ0740

Airtech Environmental Laboratories (AEL)

4620 E.Elwood St., Suite 13, Phoenix, AZ 85040 480-968-5888 Fax 480-966-1888

Date: August 30, 2018

Client:	Natalie Chrisman	Work Order #:	18H012
Company:	WOOD	Project Name:	Cave Creek Landfill
Address:	4600 E Washington St, #600	Project Number:	14-2014-2034
	Phoenix, AZ 85034	Received Date:	8/15/2018

SAMPLE SUMMARY

LAB ID	CLIENT ID	METHOD	SAMPLE DATE	SAMPLE TIME
18H012-01	SP4-H1-081518	TO-15	8/15/2018	740
18H012-02	SP3-C3-081518	TO-15	8/15/2018	745
18H012-03	SP2-C2-081518	TO-15	8/15/2018	750
18H012-04	SP1-SkidOutlet-081518	TO-15	8/15/2018	755

Airtech Environmental Laboratories (AEL)
4620 E.Elwood St., Suite 13, Phoenix, AZ 85040 480-968-5888 Fax 480-966-1888

Date: August 30, 2018

Client:	Natalie Chrisman	Work Order #:	18H012
Company:	WOOD	Project Name:	Cave Creek Landfill
Address:	4600 E Washington St, #600	Project Number:	14-2014-2034
	Phoenix, AZ 85034	Received Date:	08/15/18

Case Narrative

All samples and QC associated with your samples met the quality control objectives.
Data qualifiers in this report are in accordance with ADEQ Data Qualifiers.

Airtech Environmental Laboratories (AEL) - AZ 0740

4620 E.Elwood St., Suite 13, Phoenix, AZ 85040 480-968-5888 Fax 480-966-1888

Client:	WOOD	**Client Sample ID:**	N/A
Project:	Cave Creek Landfill	**Project Number:**	14-2014-2034
Lab Order:	18H012	**Collection:**	N/A
Lab ID:	Kits QC	**Matrix:**	Air

		Canister				Grab Sampler	
		Type		Vacuum	Pressure	Type	
	Client	1.0 liter		before sampled	after sampled	1 minute-fill 1.0L canister	
AEL#	ID	SN#	Clean Batch#	Hg inch	psia	SN#	Clean Batch#
18H012-01	SP4-H1-081518	E2284	1806-03	29.0	13.82	001	1806-06
18H012-02	SP3-C3-081518	1851	1808-01	29.0	13.95	107	1806-06
18H012-03	SP2-C2-081518	E2099	1808-01	29.0	14.04	190	1806-03
18H012-04	SP1-SkidOutlet-081518	E2295	1806-03	29.0	14.08	075	1806-06

Airtech Environmental Laboratories (AEL) - AZ 0740

4620 E.Elwood St., Suite 13, Phoenix, AZ 85040 480-968-5888 Fax 480-966-1888

Client:	WOOD	**Client Sample ID:**	SP4-H1-081518
Project:	Cave Creek Landfill	**Project Number:**	14-2014-2034
Lab Order:	18H012	**Collection:**	8/15/2018
Lab ID:	01	**Matrix:**	Soil Vapor

	ppbv		ug/M^3				Date	
Analyses	**Result**	**Limit**	**Result**	**Limit**	**Qual**	**DF**	**Analyzed**	**CAS#**
VOLATILE ORGANICS IN AIR	**TO-15**						Analyst: JJ	
1,1-Dichloroethane	< 500	500	< 2,030	2,030		1,000	8/28/2018	75-34-3
1,1-Dichloroethene	< 500	500	< 1,990	1,990		1,000	8/28/2018	75-35-4
1,2-Dichlorobenzene	< 500	500	< 3,010	3,010		1,000	8/28/2018	95-50-1
1,2-Dichloroethane	< 500	500	< 2,030	2,030		1,000	8/28/2018	107-06-2
2-Butanone (MEK)	< 5,000	5,000	< 14,800	14,800		1,000	8/28/2018	78-93-3
Acetone	< 5,000	5,000	< 11,900	11,900		1,000	8/28/2018	67-64-1
Benzene	< 500	500	< 1,600	1,600		1,000	8/28/2018	71-43-2
Chlorobenzene	< 500	500	< 2,300	2,300		1,000	8/28/2018	108-90-7
Chloroform	< 500	500	< 2,440	2,440		1,000	8/28/2018	67-66-3
cis-1,2-Dichloroethene	< 500	500	< 1,980	1,980		1,000	8/28/2018	156-59-2
Dichlorodifluoromethane(F-12)	**1,330**	**1,000**	**6,580**	**4,950**		1,000	8/28/2018	75-71-8
Ethylbenzene	< 500	500	< 2,170	2,170		1,000	8/28/2018	100-41-4
m&p-Xylene	< 1,000	1,000	< 4,340	4,340		1,000	8/28/2018	179601-23-1
Methylene chloride	**49,400**	**2,000**	**171,000**	**6,940**		1,000	8/28/2018	75-09-2
o-Xylene	< 500	500	< 2,170	2,170		1,000	8/28/2018	95-47-6
Tetrachloroethene	< 1,000	1,000	< 6,780	6,780		1,000	8/28/2018	127-18-4
Tetrahydrofuran	< 2,000	2,000	< 5,900	5,900		1,000	8/28/2018	109-99-9
Toluene	< 500	500	< 1,890	1,890		1,000	8/28/2018	108-88-3
trans-1,2-Dichloroethene	< 500	500	< 1,980	1,980		1,000	8/28/2018	156-60-5
Trichloroethene	< 500	500	< 2,690	2,690		1,000	8/28/2018	79-01-6
Trichlorofluoromethane(F-11)	< 500	500	< 2,810	2,810		1,000	8/28/2018	75-69-4
Trichlorotrifluoroethane(F-113)	< 500	500	< 3,830	3,830		1,000	8/28/2018	76-13-1
Vinyl chloride	< 500	500	< 1,280	1,280		1,000	8/28/2018	75-01-4
Surr: 4-Bromofluorobenzene	97.2	70-130	%REC					

Airtech Environmental Laboratories (AEL) - AZ 0740

4620 E.Elwood St., Suite 13, Phoenix, AZ 85040 480-968-5888 Fax 480-966-1888

Client:	WOOD	**Client Sample ID:**	SP3-C3-081518
Project:	Cave Creek Landfill	**Project Number:**	14-2014-2034
Lab Order:	18H012	**Collection:**	8/15/2018
Lab ID:	02	**Matrix:**	Soil Vapor

	ppbv		ug/M^3				Date	
Analyses	**Result**	**Limit**	**Result**	**Limit**	**Qual**	**DF**	**Analyzed**	**CAS#**
VOLATILE ORGANICS IN AIR	**TO-15**						Analyst: JJ	
1,1-Dichloroethane	< 500	500	< 2,030	2,030		1,000	8/28/2018	75-34-3
1,1-Dichloroethene	< 500	500	< 1,990	1,990		1,000	8/28/2018	75-35-4
1,2-Dichlorobenzene	< 500	500	< 3,010	3,010		1,000	8/28/2018	95-50-1
1,2-Dichloroethane	< 500	500	< 2,030	2,030		1,000	8/28/2018	107-06-2
2-Butanone (MEK)	< 5,000	5,000	< 14,800	14,800		1,000	8/28/2018	78-93-3
Acetone	< 5,000	5,000	< 11,900	11,900		1,000	8/28/2018	67-64-1
Benzene	< 500	500	< 1,600	1,600		1,000	8/28/2018	71-43-2
Chlorobenzene	< 500	500	< 2,300	2,300		1,000	8/28/2018	108-90-7
Chloroform	< 500	500	< 2,440	2,440		1,000	8/28/2018	67-66-3
cis-1,2-Dichloroethene	< 500	500	< 1,980	1,980		1,000	8/28/2018	156-59-2
Dichlorodifluoromethane(F-12)	**1,550**	**1,000**	**7,670**	**4,950**		1,000	8/28/2018	75-71-8
Ethylbenzene	< 500	500	< 2,170	2,170		1,000	8/28/2018	100-41-4
m&p-Xylene	< 1,000	1,000	< 4,340	4,340		1,000	8/28/2018	179601-23-1
Methylene chloride	**73,000**	**4,000**	**253,000**	**13,900**		2,000	8/28/2018	75-09-2
o-Xylene	< 500	500	< 2,170	2,170		1,000	8/28/2018	95-47-6
Tetrachloroethene	< 1,000	1,000	< 6,780	6,780		1,000	8/28/2018	127-18-4
Tetrahydrofuran	< 2,000	2,000	< 5,900	5,900		1,000	8/28/2018	109-99-9
Toluene	< 500	500	< 1,890	1,890		1,000	8/28/2018	108-88-3
trans-1,2-Dichloroethene	< 500	500	< 1,980	1,980		1,000	8/28/2018	156-60-5
Trichloroethene	< 500	500	< 2,690	2,690		1,000	8/28/2018	79-01-6
Trichlorofluoromethane(F-11)	< 500	500	< 2,810	2,810		1,000	8/28/2018	75-69-4
Trichlorotrifluoroethane(F-113)	< 500	500	< 3,830	3,830		1,000	8/28/2018	76-13-1
Vinyl chloride	**640**	**500**	**1,640**	**1,280**		1,000	8/28/2018	75-01-4
Surr: 4-Bromofluorobenzene	95.4	70-130	%REC					

Airtech Environmental Laboratories (AEL) - AZ 0740

4620 E.Elwood St., Suite 13, Phoenix, AZ 85040 480-968-5888 Fax 480-966-1888

Client:	WOOD	**Client Sample ID:**	SP2-C2-081518
Project:	Cave Creek Landfill	**Project Number:**	14-2014-2034
Lab Order:	18H012	**Collection:**	8/15/2018
Lab ID:	03	**Matrix:**	Soil Vapor

	ppbv		ug/M^3				Date	
Analyses	**Result**	**Limit**	**Result**	**Limit**	**Qual**	**DF**	**Analyzed**	**CAS#**
VOLATILE ORGANICS IN AIR	**TO-15**						Analyst: JJ	
1,1-Dichloroethane	< 500	500	< 2,030	2,030		1,000	8/28/2018	75-34-3
1,1-Dichloroethene	**32,200**	**500**	**128,000**	**1,990**		1,000	8/28/2018	75-35-4
1,2-Dichlorobenzene	< 500	500	< 3,010	3,010		1,000	8/28/2018	95-50-1
1,2-Dichloroethane	< 500	500	< 2,030	2,030		1,000	8/28/2018	107-06-2
2-Butanone (MEK)	< 5,000	5,000	< 14,800	14,800		1,000	8/28/2018	78-93-3
Acetone	< 5,000	5,000	< 11,900	11,900		1,000	8/28/2018	67-64-1
Benzene	< 500	500	< 1,600	1,600		1,000	8/28/2018	71-43-2
Chlorobenzene	< 500	500	< 2,300	2,300		1,000	8/28/2018	108-90-7
Chloroform	< 500	500	< 2,440	2,440		1,000	8/28/2018	67-66-3
cis-1,2-Dichloroethene	**530**	**500**	**2,100**	**1,980**		1,000	8/28/2018	156-59-2
Dichlorodifluoromethane(F-12)	**1,030**	**1,000**	**5,100**	**4,950**		1,000	8/28/2018	75-71-8
Ethylbenzene	< 500	500	< 2,170	2,170		1,000	8/28/2018	100-41-4
m&p-Xylene	< 1,000	1,000	< 4,340	4,340		1,000	8/28/2018	179601-23-1
Methylene chloride	**37,900**	**2,000**	**132,000**	**6,940**		1,000	8/28/2018	75-09-2
o-Xylene	< 500	500	< 2,170	2,170		1,000	8/28/2018	95-47-6
Tetrachloroethene	< 1,000	1,000	< 6,780	6,780		1,000	8/28/2018	127-18-4
Tetrahydrofuran	< 2,000	2,000	< 5,900	5,900		1,000	8/28/2018	109-99-9
Toluene	< 500	500	< 1,890	1,890		1,000	8/28/2018	108-88-3
trans-1,2-Dichloroethene	< 500	500	< 1,980	1,980		1,000	8/28/2018	156-60-5
Trichloroethene	< 500	500	< 2,690	2,690		1,000	8/28/2018	79-01-6
Trichlorofluoromethane(F-11)	< 500	500	< 2,810	2,810		1,000	8/28/2018	75-69-4
Trichlorotrifluoroethane(F-113)	< 500	500	< 3,830	3,830		1,000	8/28/2018	76-13-1
Vinyl chloride	**500**	**500**	**1,280**	**1,280**		1,000	8/28/2018	75-01-4
Surr: 4-Bromofluorobenzene	95.6	70-130	%REC					

Airtech Environmental Laboratories (AEL) - AZ 0740

4620 E.Elwood St., Suite 13, Phoenix, AZ 85040 480-968-5888 Fax 480-966-1888

Client:	WOOD	**Client Sample ID:**	SP1-SkidOutlet-081518
Project:	Cave Creek Landfill	**Project Number:**	14-2014-2034
Lab Order:	18H012	**Collection:**	8/15/2018
Lab ID:	04	**Matrix:**	Soil Vapor

	ppbv		ug/M^3				Date	
Analyses	**Result**	**Limit**	**Result**	**Limit**	**Qual**	**DF**	**Analyzed**	**CAS#**
VOLATILE ORGANICS IN AIR	**TO-15**						Analyst: JJ	
1,1-Dichloroethane	< 2,500	2,500	< 10,100	10,100		5,000	8/28/2018	75-34-3
1,1-Dichloroethene	**40,700**	**2,500**	**162,000**	**9,930**		5,000	8/28/2018	75-35-4
1,2-Dichlorobenzene	< 2,500	2,500	< 15,000	15,000		5,000	8/28/2018	95-50-1
1,2-Dichloroethane	< 2,500	2,500	< 10,100	10,100		5,000	8/28/2018	107-06-2
2-Butanone (MEK)	< 25,000	25,000	< 73,800	73,800		5,000	8/28/2018	78-93-3
Acetone	< 25,000	25,000	< 59,500	59,500		5,000	8/28/2018	67-64-1
Benzene	< 2,500	2,500	< 7,980	7,980		5,000	8/28/2018	71-43-2
Chlorobenzene	< 2,500	2,500	< 11,500	11,500		5,000	8/28/2018	108-90-7
Chloroform	< 2,500	2,500	< 12,200	12,200		5,000	8/28/2018	67-66-3
cis-1,2-Dichloroethene	**8,350**	**2,500**	**33,100**	**9,900**		5,000	8/28/2018	156-59-2
Dichlorodifluoromethane(F-12)	< 5,000	5,000	< 24,800	24,800		5,000	8/28/2018	75-71-8
Ethylbenzene	< 2,500	2,500	< 10,900	10,900		5,000	8/28/2018	100-41-4
m&p-Xylene	< 5,000	5,000	< 21,700	21,700		5,000	8/28/2018	179601-23-1
Methylene chloride	**55,400**	**10,000**	**192,000**	**34,700**		5,000	8/28/2018	75-09-2
o-Xylene	< 2,500	2,500	< 10,900	10,900		5,000	8/28/2018	95-47-6
Tetrachloroethene	**12,700**	**5,000**	**86,100**	**33,900**		5,000	8/28/2018	127-18-4
Tetrahydrofuran	< 10,000	10,000	< 29,500	29,500		5,000	8/28/2018	109-99-9
Toluene	< 2,500	2,500	< 9,430	9,430		5,000	8/28/2018	108-88-3
trans-1,2-Dichloroethene	< 2,500	2,500	< 9,900	9,900		5,000	8/28/2018	156-60-5
Trichloroethene	**91,200**	**2,500**	**490,000**	**13,400**		5,000	8/28/2018	79-01-6
Trichlorofluoromethane(F-11)	< 2,500	2,500	< 14,100	14,100		5,000	8/28/2018	75-69-4
Trichlorotrifluoroethane(F-113)	**15,800**	**2,500**	**121,000**	**19,200**		5,000	8/28/2018	76-13-1
Vinyl chloride	< 2,500	2,500	< 6,400	6,400		5,000	8/28/2018	75-01-4
Surr: 4-Bromofluorobenzene	94.2	70-130	%REC					

Airtech Environmental Laboratories (AEL) - AZ 0740

4620 E.Elwood St., Suite 13, Phoenix, AZ 85040 480-968-5888 Fax 480-966-1888

Client:	WOOD	**Client Sample ID:**	N/A
Project:	Cave Creek Landfill	**Project Number:**	14-2014-2034
Lab Order:	18H012	**Collection:**	N/A
Lab ID:	Blank	**Matrix:**	Nitrogen

Method QC Data

Batch: MS010828 Analyst: JJ

Analyses	ppbv Result	ppbv Limit	ug/M^3 Result	ug/M^3 Limit	Qual	DF	Date Analyzed	CAS#
VOLATILE ORGANICS IN AIR		**TO-15**					Analyst: JJ	
1,1-Dichloroethane	< 0.5	0.5	< 2.03	2.03		1	8/28/2018	75-34-3
1,1-Dichloroethene	< 0.5	0.5	< 1.99	1.99		1	8/28/2018	75-35-4
1,2-Dichlorobenzene	< 0.5	0.5	< 3.01	3.01		1	8/28/2018	95-50-1
1,2-Dichloroethane	< 0.5	0.5	< 2.03	2.03		1	8/28/2018	107-06-2
2-Butanone (MEK)	< 5.0	5.0	< 14.8	14.8		1	8/28/2018	78-93-3
Acetone	< 5.0	5.0	< 11.9	11.9		1	8/28/2018	67-64-1
Benzene	< 0.5	0.5	< 1.60	1.60		1	8/28/2018	71-43-2
Chlorobenzene	< 0.5	0.5	< 2.30	2.30		1	8/28/2018	108-90-7
Chloroform	< 0.5	0.5	< 2.44	2.44		1	8/28/2018	67-66-3
cis-1,2-Dichloroethene	< 0.5	0.5	< 1.98	1.98		1	8/28/2018	156-59-2
Dichlorodifluoromethane(F-12)	< 1.0	1.0	< 4.95	4.95		1	8/28/2018	75-71-8
Ethylbenzene	< 0.5	0.5	< 2.17	2.17		1	8/28/2018	100-41-4
m&p-Xylene	< 1.0	1.0	< 4.34	4.34		1	8/28/2018	179601-23-1
Methylene chloride	< 2.0	2.0	< 6.94	6.94		1	8/28/2018	75-09-2
o-Xylene	< 0.5	0.5	< 2.17	2.17		1	8/28/2018	95-47-6
Tetrachloroethene	< 1.0	1.0	< 6.78	6.78		1	8/28/2018	127-18-4
Tetrahydrofuran	< 2.0	2.0	< 5.90	5.90		1	8/28/2018	109-99-9
Toluene	< 0.5	0.5	< 1.89	1.89		1	8/28/2018	108-88-3
trans-1,2-Dichloroethene	< 0.5	0.5	< 1.98	1.98		1	8/28/2018	156-60-5
Trichloroethene	< 0.5	0.5	< 2.69	2.69		1	8/28/2018	79-01-6
Trichlorofluoromethane(F-11)	< 0.5	0.5	< 2.81	2.81		1	8/28/2018	75-69-4
Trichlorotrifluoroethane(F-113)	< 0.5	0.5	< 3.83	3.83		1	8/28/2018	76-13-1
Vinyl chloride	< 0.5	0.5	< 1.28	1.28		1	8/28/2018	75-01-4
Surr: 4-Bromofluorobenzene	86.8	70-130	%REC					

Airtech Environmental Laboratories (AEL) - AZ 0740

4620 E.Elwood St., Suite 13, Phoenix, AZ 85040 480-968-5888 Fax 480-966-1888

Client:	WOOD	**Client Sample ID:**	N/A
Project:	Cave Creek Landfill	**Project Number:**	14-2014-2034
Lab Order:	18H012	**Collection:**	N/A
Lab ID:	LCS/LCSD	**Matrix:**	Nitrogen

Method QC Data

Date Analyzed: 8/28/2018 Batch: MS010828 Analyst: JJ

Analyses	LCS Result	LCS %REC	LCSD Result	LCSD %REC	T.V.	%RPD	Unit	Qualifier LCS	Qualifier LCSD	Qualifier RPD
VOLATILE ORGANICS IN AIR	**TO-15**							70-130%		<25%
Dichlorodifluoromethane(F-12)	9.5	95.4	9.4	94.1	10.0	1.4	ppbv			
Vinyl Chloride	9.1	90.7	8.6	85.9	10.0	5.4	ppbv			
Trichlorofluoromethane (F-11)	8.7	86.6	8.8	88.2	10.0	1.8	ppbv			
Acetone	8.3	82.9	8.5	84.8	10.0	2.3	ppbv			
1,1-Dichloroethene	8.8	88.0	9.1	91.3	10.0	3.7	ppbv			
Trichlorotrifluoroethane (F-113)	8.6	86.2	8.9	89.4	10.0	3.6	ppbv			
Methylene Chloride	8.4	84.0	8.6	85.6	10.0	1.9	ppbv			
trans-1,2-Dichloroethene	8.7	87.1	9.0	90.0	10.0	3.3	ppbv			
1,1-Dichloroethane	8.6	85.5	9.0	90.2	10.0	5.4	ppbv			
2-Butanone (MEK)	9.3	93.0	9.7	97.1	10.0	4.3	ppbv			
cis-1,2-Dichloroethene	8.5	85.3	8.9	89.2	10.0	4.5	ppbv			
Chloroform	8.3	82.7	8.7	87.3	10.0	5.4	ppbv			
Tetrahydrofuran	10.0	99.8	10.6	106	10.0	6.4	ppbv			
1,2-Dichloroethane	8.7	87.1	9.2	91.7	10.0	5.1	ppbv			
Benzene	9.0	90.2	9.3	93.1	10.0	3.2	ppbv			
Trichloroethene	8.5	84.6	8.8	87.6	10.0	3.5	ppbv			
Toluene	9.8	97.8	10.3	103	10.0	5.0	ppbv			
Tetrachloroethene	8.9	88.5	9.0	90.2	10.0	1.9	ppbv			
Chlorobenzene	9.2	91.6	9.5	94.6	10.0	3.2	ppbv			
Ethylbenzene	9.7	97.1	10.3	103	10.0	6.1	ppbv			
m&p-Xylene	19.5	97.4	20.0	100	20.0	2.8	ppbv			
o-Xylene	9.2	91.7	9.5	95.3	10.0	3.9	ppbv			
1,2-Dichlorobenzene	9.8	97.8	10.2	102	10.0	4.5	ppbv			
Surr: 4-Bromofluorobenzene	9.9	98.8	10.0	100			%REC			
		70-130%		70-130%						

Airtech Environmental Laboratories (AEL) - AZ 0740

4620 E.Elwood St., Suite 13, Phoenix, AZ 85040 480-968-5888 Fax 480-966-1888

Client:	WOOD	**Client Sample ID:**	NA
Project:	Cave Creek Landfill	**Project Number:**	14-2014-2034
Lab Order:	18H012	**Collection:**	NA
Lab ID:	Standards	**Matrix:**	Nitrogen

AEL ID#	STD Name	Vendor	SGI Order#	Description	CONC.	Accuracy	Exp.Date
S-180620-03	Stock	Spectra Gases	116447993	TO-14 39 Analytes	1.0 ppmv	± 5%	6/25/2019
S-180620-02	Stock	Spectra Gases	116447993	TO-15 25 Analytes	1.0 ppmv	± 5%	6/22/2019
S-180620-01	Stock	Spectra Gases	116447993	15 Additional Compounds	1.0 ppmv	± 5%	6/20/2019
S-171019-01	Stock	Spectra Gases	114560630	TO-15 IS 4 Compounds	1.0 ppmv	± 5%	10/19/2018
A-180820-01	Working Std	AEL Dilution		TO-15 74 Analytes	10 ppbv	± 5%	11/20/2018
A-180827-01	Working IS	AEL Dilution		TO-15 IS 4 Compounds	50 ppbv	± 5%	10/19/2018

Airtech Environmental Laboratories (AEL)

Chain of Custody

4620 E.Elwood Street, Suite 13, Phoenix, AZ 85040 480-968-5888 (phone) 480-966-1888 (fax)

Customer : Wood.	Page 1 of 1		AEL Lab #
Address: 4600 East Washington Street, Suite #600	Sampler: Eric Miller	Phone: (602) 300-8313	184012
	Project Name: Cave Creek Landfill	Project Number: 14-2017-2034	
City, State, Zip: Phoenix, AZ 85034	Project location: Cave Creek, AZ		
Contact: Natalie Chrisman	P.O. Number:		
Phone: (602) 733-6000 Fax: (602) 733-6100	Fax Results: Y N		
E-Mail Address: Natalie.Chrisman@amecfw.com	E-Mail Results: Y N		

Sample Receipt

Temperature_____ °C
Custody Seals: Yes_____ No_____
Custody Seals Intact: Yes_____ No_____
Total # of Containers:_____

Turn Around Request

_____ 24 Hours _____ 48 Hours
_____ 72 Hours
_____ 5 working Day
X Standard 10 Working Days

Sample Type

SVE: soil vapor extraction
A: ambient air
I: indoor air
S: soil vapor
W: water
GW: ground water
WW: waste water

Sample Information

AEL Lab #	Serial # Canister	Serial # Grab	Canister (L) or bag	Grab (Min)	Client's Sample Identification	Sampled Date	Sampled Time	Sample Type	Number of Containers	TO-15 full list	TO-15 TPH(GRO)	TO-15 Selet List	8260B AZ Vapor full list	8260B Vapor select list	8015 GRO	8260B Water			DFA tracer cmpd. as TIC
01	E2284	001	6 1 bag	1 2 5	SP4-H1-081518	8.15.18	740	SVE	1			X							
02	1851	107	6 1 bag	1 2 5	SP3-C3-081518	↓	745	↓	↓			X							
03	E2099	190	6 1 bag	1 2 5	SP2-C2-081518	↓	750	↓	↓			X							
04	E2295	075	6 1 bag	1 2 5	SP1-SKIDOUTLET-081518	↓	755	↓	↓			X							
			6 1 bag	1 2 5															
			6 1 bag	1 2 5															
			6 1 bag	1 2 5															
			6 1 bag	1 2 5															
			6 1 bag	1 2 5															
			6 1 bag	1 2 5															

Instructions / Special Requirements:

Date:	Time:	Samples Relinquished By:	Received By:
8.15.18	1705	E. Miller	James Jones Airtech

Airtech Environmental Laboratories (AEL)

4620 E.Elwood St., Suite 13, Phoenix, AZ 85040 480-968-5888 Fax 480-966-1888

Date: October 7, 2018

Client:	Natalie Chrisman	Work Order #:	18I020
Company:	WOOD	Project Name:	Cave Creek Landfill
Address:	4600 E Washington St, #600	Project Number:	14-2017-2034
	Phoenix, AZ 85034	Received Date:	9/19/2018

Dear Client:

Airtech Environmental Laboratories received four (4) samples for analysis.

All analyses met laboratory QA/QC with any exceptions addressed in the Case Narrative.

If you have any questions or concerns regarding your samples analysis, please contact the laboratory at 480-968-5888

Sincerely,

Yu Min Shi
Technical Director
Airtech Environmental Labs

Arizona ADHS License No. AZ0740

Airtech Environmental Laboratories (AEL)

4620 E.Elwood St., Suite 13, Phoenix, AZ 85040 480-968-5888 Fax 480-966-1888

Date: October 7, 2018

Client:	Natalie Chrisman	Work Order #:	18I020
Company:	WOOD	Project Name:	Cave Creek Landfill
Address:	4600 E Washington St, #600	Project Number:	14-2017-2034
	Phoenix, AZ 85034	Received Date:	9/19/2018

SAMPLE SUMMARY

LAB ID	CLIENT ID	METHOD	SAMPLE DATE	SAMPLE TIME
18I020-01	SP4-H1-091918	TO-15	9/19/2018	955
18I020-02	SP3-C1-091918	TO-15	9/19/2018	1000
18I020-03	SP2-C3-091918	TO-15	9/19/2018	1005
18I020-04	SP1-SkidOutlet-091918	TO-15	9/19/2018	1010

Airtech Environmental Laboratories (AEL)
4620 E.Elwood St., Suite 13, Phoenix, AZ 85040 480-968-5888 Fax 480-966-1888

Date: October 7, 2018

Client:	Natalie Chrisman	Work Order #:	18I020
Company:	WOOD	Project Name:	Cave Creek Landfill
Address:	4600 E Washington St, #600	Project Number:	14-2017-2034
	Phoenix, AZ 85034	Received Date:	09/19/18

Case Narrative

All samples and QC associated with your samples met the quality control objectives.
Data qualifiers in this report are in accordance with ADEQ Data Qualifiers.

Airtech Environmental Laboratories (AEL) - AZ 0740

4620 E.Elwood St., Suite 13, Phoenix, AZ 85040 480-968-5888 Fax 480-966-1888

Client:	WOOD	**Client Sample ID:**	N/A
Project:	Cave Creek Landfill	**Project Number:**	14-2017-2034
Lab Order:	18I020	**Collection:**	N/A
Lab ID:	Kits QC	**Matrix:**	Air

		Canister				Grab Sampler	
		Type		Vacuum	Pressure	Type	
	Client	1.0 liter		before sampled	after sampled	1 minute-fill 1.0L canister	
AEL#	ID	SN#	Clean Batch#	Hg inch	psia	SN#	Clean Batch#
18I020-01	SP4-H1-091918	1885	1809-06	29.0	13.82	193	1809-03
18I020-02	SP3-C1-091918	E2370	1809-06	29.0	14.07	117	1809-03
18I020-03	SP2-C3-091918	1813	1809-06	29.0	14.18	047	1809-03
18I020-04	SP1-SkidOutlet-091918	1791	1809-06	29.0	14.13	105	1809-03

Airtech Environmental Laboratories (AEL) - AZ 0740

4620 E.Elwood St., Suite 13, Phoenix, AZ 85040 480-968-5888 Fax 480-966-1888

Client:	WOOD	**Client Sample ID:**	SP4-H1-091918
Project:	Cave Creek Landfill	**Project Number:**	14-2017-2034
Lab Order:	18I020	**Collection:**	9/19/2018
Lab ID:	01	**Matrix:**	Soil Vapor

	ppbv		ug/M^3				Date	
Analyses	**Result**	**Limit**	**Result**	**Limit**	**Qual**	**DF**	**Analyzed**	**CAS#**
VOLATILE ORGANICS IN AIR	**TO-15**						Analyst: JJ	
1,1-Dichloroethane	< 100	100	< 2,030	2,030		200	10/4/2018	75-34-3
1,1-Dichloroethene	**1,350**	**100**	**5,360**	**397**		200	10/4/2018	75-35-4
1,2-Dichlorobenzene	< 100	100	< 3,010	3,010		200	10/4/2018	95-50-1
1,2-Dichloroethane	< 100	100	< 2,030	2,030		200	10/4/2018	107-06-2
2-Butanone (MEK)	< 1,000	1,000	< 14,800	14,800		200	10/4/2018	78-93-3
Acetone	< 1,000	1,000	< 2,380	2,380		200	10/4/2018	67-64-1
Benzene	< 100	100	< 1,600	1,600		200	10/4/2018	71-43-2
Chlorobenzene	**114**	**100**	**524**	**460**		200	10/4/2018	108-90-7
Chloroform	< 100	100	< 488	488		200	10/4/2018	67-66-3
cis-1,2-Dichloroethene	**246**	**100**	**974**	**396**		200	10/4/2018	156-59-2
Dichlorodifluoromethane(F-12)	**1,690**	**200**	**8,370**	**990**		200	10/4/2018	75-71-8
Ethylbenzene	< 100	100	< 434	434		200	10/4/2018	100-41-4
m&p-Xylene	< 200	200	< 868	868		200	10/4/2018	179601-23-1
Methylene chloride	**2,750**	**400**	**9,540**	**1,390**		200	10/4/2018	75-09-2
o-Xylene	< 100	100	< 434	434		200	10/4/2018	95-47-6
Tetrachloroethene	**1,090**	**200**	**7,390**	**1,360**		200	10/4/2018	127-18-4
Tetrahydrofuran	< 400	400	< 1,180	1,180		200	10/4/2018	109-99-9
Toluene	< 100	100	< 1,890	1,890		200	10/4/2018	108-88-3
trans-1,2-Dichloroethene	< 100	100	< 396	396		200	10/4/2018	156-60-5
Trichloroethene	**4,700**	**100**	**2,690**	**2,690**		200	10/4/2018	79-01-6
Trichlorofluoromethane(F-11)	< 100	100	< 562	562		200	10/4/2018	75-69-4
Trichlorotrifluoroethane(F-113)	**596**	**100**	**4,570**	**766**		200	10/4/2018	76-13-1
Vinyl chloride	**486**	**100**	**1,240**	**256**		200	10/4/2018	75-01-4
Surr: 4-Bromofluorobenzene	95.9	70-130	%REC					

Airtech Environmental Laboratories (AEL) - AZ 0740

4620 E.Elwood St., Suite 13, Phoenix, AZ 85040 480-968-5888 Fax 480-966-1888

Client:	WOOD	**Client Sample ID:**	SP3-C1-091918
Project:	Cave Creek Landfill	**Project Number:**	14-2017-2034
Lab Order:	18I020	**Collection:**	9/19/2018
Lab ID:	02	**Matrix:**	Soil Vapor

	ppbv		ug/M^3				Date	
Analyses	**Result**	**Limit**	**Result**	**Limit**	**Qual**	**DF**	**Analyzed**	**CAS#**
VOLATILE ORGANICS IN AIR	TO-15						Analyst: JJ	
1,1-Dichloroethane	< 10	10	< 40.5	**40.5**		20	10/4/2018	75-34-3
1,1-Dichloroethene	< 10	10	< 39.7	39.7		20	10/4/2018	75-35-4
1,2-Dichlorobenzene	< 10	10	< 60.1	60.1		20	10/4/2018	95-50-1
1,2-Dichloroethane	< 10	10	< 40.5	40.5		20	10/4/2018	107-06-2
2-Butanone (MEK)	< 100	100	< 295	295		20	10/4/2018	78-93-3
Acetone	< 100	100	< 238	238		20	10/4/2018	67-64-1
Benzene	< 10	10	< 31.9	31.9		20	10/4/2018	71-43-2
Chlorobenzene	< 10	10	< 46.0	46.0		20	10/4/2018	108-90-7
Chloroform	< 10	10	< 48.8	48.8		20	10/4/2018	67-66-3
cis-1,2-Dichloroethene	< 10	10	< 39.6	39.6		20	10/4/2018	156-59-2
Dichlorodifluoromethane(F-12)	**2,010**	**1,000**	**9,950**	**4,950**		1,000	10/4/2018	75-71-8
Ethylbenzene	< 10	10	< 43.4	43.4		20	10/4/2018	100-41-4
m&p-Xylene	< 20	20	< 86.8	86.8		20	10/4/2018	179601-23-1
Methylene chloride	**614**	**40**	**2,130**	**139**		20	10/4/2018	75-09-2
o-Xylene	< 10	10	< 43.4	43.4		20	10/4/2018	95-47-6
Tetrachloroethene	< 20	20	< 136	136		20	10/4/2018	127-18-4
Tetrahydrofuran	< 40	40	< 118	118		20	10/4/2018	109-99-9
Toluene	< 10	10	< 37.7	37.7		20	10/4/2018	108-88-3
trans-1,2-Dichloroethene	< 10	10	< 39.6	39.6		20	10/4/2018	156-60-5
Trichloroethene	< 10	10	< 53.7	53.7		20	10/4/2018	79-01-6
Trichlorofluoromethane(F-11)	< 10	10	< 56.2	56.2		20	10/4/2018	75-69-4
Trichlorotrifluoroethane(F-113)	< 10	10	< 76.6	76.6		20	10/4/2018	76-13-1
Vinyl chloride	**695**	**10**	**1,780**	**25.6**		20	10/4/2018	75-01-4
Surr: 4-Bromofluorobenzene	97.5	70-130	%REC					

Airtech Environmental Laboratories (AEL) - AZ 0740

4620 E.Elwood St., Suite 13, Phoenix, AZ 85040 480-968-5888 Fax 480-966-1888

Client:	WOOD	**Client Sample ID:**	SP2-C3-091918
Project:	Cave Creek Landfill	**Project Number:**	14-2017-2034
Lab Order:	18I020	**Collection:**	9/19/2018
Lab ID:	03	**Matrix:**	Soil Vapor

	ppbv		ug/M^3				Date	
Analyses	**Result**	**Limit**	**Result**	**Limit**	**Qual**	**DF**	**Analyzed**	**CAS#**
VOLATILE ORGANICS IN AIR	**TO-15**						Analyst: JJ	
1,1-Dichloroethane	< 500	500	< 2,030	2,030		1,000	10/4/2018	75-34-3
1,1-Dichloroethene	< 500	500	< 1,985	1,985		1,000	10/4/2018	75-35-4
1,2-Dichlorobenzene	< 500	500	< 3,010	3,010		1,000	10/4/2018	95-50-1
1,2-Dichloroethane	< 500	500	< 2,030	2,030		1,000	10/4/2018	107-06-2
2-Butanone (MEK)	< 5,000	5,000	< 14,800	14,800		1,000	10/4/2018	78-93-3
Acetone	< 5,000	5,000	< 11,900	11,900		1,000	10/4/2018	67-64-1
Benzene	< 500	500	< 1,600	1,600		1,000	10/4/2018	71-43-2
Chlorobenzene	< 500	500	< 2,300	2,300		1,000	10/4/2018	108-90-7
Chloroform	< 500	500	< 2,440	2,440		1,000	10/4/2018	67-66-3
cis-1,2-Dichloroethene	< 530	500	< 2,100	1,980		1,000	10/4/2018	156-59-2
Dichlorodifluoromethane(F-12)	**1,350**	**1,000**	**6,680**	**4,950**		1,000	10/4/2018	75-71-8
Ethylbenzene	< 500	500	< 2,170	2,170		1,000	10/4/2018	100-41-4
m&p-Xylene	< 1,000	1,000	< 4,340	4,340		1,000	10/4/2018	179601-23-1
Methylene chloride	**55,200**	**4,000**	**192,000**	**13,900**		2,000	10/4/2018	75-09-2
o-Xylene	< 500	500	< 2,170	2,170		1,000	10/4/2018	95-47-6
Tetrachloroethene	< 1,000	1,000	< 6,780	6,780		1,000	10/4/2018	127-18-4
Tetrahydrofuran	< 2,000	2,000	< 5,900	5,900		1,000	10/4/2018	109-99-9
Toluene	< 500	500	< 1,890	1,890		1,000	10/4/2018	108-88-3
trans-1,2-Dichloroethene	< 500	500	< 1,980	1,980		1,000	10/4/2018	156-60-5
Trichloroethene	< 500	500	< 2,690	2,690		1,000	10/4/2018	79-01-6
Trichlorofluoromethane(F-11)	< 500	500	< 2,810	2,810		1,000	10/4/2018	75-69-4
Trichlorotrifluoroethane(F-113)	< 500	500	< 3,830	3,830		1,000	10/4/2018	76-13-1
Vinyl chloride	**610**	**500**	**1,560**	**1,280**		1,000	10/4/2018	75-01-4
Surr: 4-Bromofluorobenzene	94.2	70-130	%REC					

Airtech Environmental Laboratories (AEL) - AZ 0740

4620 E.Elwood St., Suite 13, Phoenix, AZ 85040 480-968-5888 Fax 480-966-1888

Client:	WOOD	**Client Sample ID:**	SP1-SkidOutlet-091918
Project:	Cave Creek Landfill	**Project Number:**	14-2017-2034
Lab Order:	18I020	**Collection:**	9/19/2018
Lab ID:	04	**Matrix:**	Soil Vapor

	ppbv		ug/M^3				Date	
Analyses	**Result**	**Limit**	**Result**	**Limit**	**Qual**	**DF**	**Analyzed**	**CAS#**
VOLATILE ORGANICS IN AIR	**TO-15**						Analyst: JJ	
1,1-Dichloroethane	< 2,500	2,500	< 10,130	10,130		5,000	10/4/2018	75-34-3
1,1-Dichloroethene	**45,900**	**2,500**	**182,200**	**9,925**		5,000	10/4/2018	75-35-4
1,2-Dichlorobenzene	< 2,500	2,500	< 15,030	15,030		5,000	10/4/2018	95-50-1
1,2-Dichloroethane	< 2,500	2,500	< 10,130	10,130		5,000	10/4/2018	107-06-2
2-Butanone (MEK)	< 25,000	25,000	< 73,750	73,750		5,000	10/4/2018	78-93-3
Acetone	< 25,000	25,000	< 59,500	59,500		5,000	10/4/2018	67-64-1
Benzene	< 2,500	2,500	< 7,975	7,975		5,000	10/4/2018	71-43-2
Chlorobenzene	< 2,500	2,500	< 11,500	11,500		5,000	10/4/2018	108-90-7
Chloroform	< 2,500	2,500	< 12,200	12,200		5,000	10/4/2018	67-66-3
cis-1,2-Dichloroethene	**7,300**	**2,500**	**28,910**	**9,900**		5,000	10/4/2018	156-59-2
Dichlorodifluoromethane(F-12)	< 5,000	5,000	< 24,750	24,750		5,000	10/4/2018	75-71-8
Ethylbenzene	< 2,500	2,500	< 10,850	10,850		5,000	10/4/2018	100-41-4
m&p-Xylene	< 5,000	5,000	< 21,700	21,700		5,000	10/4/2018	179601-23-1
Methylene chloride	**70,100**	**10,000**	**243,200**	**34,700**		5,000	10/4/2018	75-09-2
o-Xylene	< 2,500	2,500	< 10,850	10,850		5,000	10/4/2018	95-47-6
Tetrachloroethene	**14,400**	**5,000**	**97,630**	**33,900**		5,000	10/4/2018	127-18-4
Tetrahydrofuran	< 10,000	10,000	< 29,500	29,500		5,000	10/4/2018	109-99-9
Toluene	< 2,500	2,500	< 9,425	9,425		5,000	10/4/2018	108-88-3
trans-1,2-Dichloroethene	< 2,500	2,500	< 9,900	9,900		5,000	10/4/2018	156-60-5
Trichloroethene	**108,000**	**2,500**	**580,000**	**13,430**		5,000	10/4/2018	79-01-6
Trichlorofluoromethane(F-11)	< 2,500	2,500	< 14,050	14,050		5,000	10/4/2018	75-69-4
Trichlorotrifluoroethane(F-113)	**18,600**	**2,500**	**142,500**	**19,150**		5,000	10/4/2018	76-13-1
Vinyl chloride	< 2,500	2,500	< 6,400	6,400		5,000	10/4/2018	75-01-4
Surr: 4-Bromofluorobenzene	94.2	70-130	%REC					

Airtech Environmental Laboratories (AEL) - AZ 0740

4620 E.Elwood St., Suite 13, Phoenix, AZ 85040 480-968-5888 Fax 480-966-1888

Client:	WOOD	**Client Sample ID:**	N/A
Project:	Cave Creek Landfill	**Project Number:**	14-2017-2034
Lab Order:	18I020	**Collection:**	N/A
Lab ID:	Blank	**Matrix:**	Nitrogen

Method QC Data

Batch: MS011004 Analyst: JJ

Analyses	ppbv Result	ppbv Limit	ug/M^3 Result	ug/M^3 Limit	Qual	DF	Date Analyzed	CAS#
VOLATILE ORGANICS IN AIR		**TO-15**					Analyst: JJ	
1,1-Dichloroethane	< 0.5	0.5	< 2.03	2.03		1	10/4/2018	75-34-3
1,1-Dichloroethene	< 0.5	0.5	< 1.99	1.99		1	10/4/2018	75-35-4
1,2-Dichlorobenzene	< 0.5	0.5	< 3.01	3.01		1	10/4/2018	95-50-1
1,2-Dichloroethane	< 0.5	0.5	< 2.03	2.03		1	10/4/2018	107-06-2
2-Butanone (MEK)	< 5.0	5.0	< 14.8	14.8		1	10/4/2018	78-93-3
Acetone	< 5.0	5.0	< 11.9	11.9		1	10/4/2018	67-64-1
Benzene	< 0.5	0.5	< 1.60	1.60		1	10/4/2018	71-43-2
Chlorobenzene	< 0.5	0.5	< 2.30	2.30		1	10/4/2018	108-90-7
Chloroform	< 0.5	0.5	< 2.44	2.44		1	10/4/2018	67-66-3
cis-1,2-Dichloroethene	< 0.5	0.5	< 1.98	1.98		1	10/4/2018	156-59-2
Dichlorodifluoromethane(F-12)	< 1.0	1.0	< 4.95	4.95		1	10/4/2018	75-71-8
Ethylbenzene	< 0.5	0.5	< 2.17	2.17		1	10/4/2018	100-41-4
m&p-Xylene	< 1.0	1.0	< 4.34	4.34		1	10/4/2018	179601-23-1
Methylene chloride	< 2.0	2.0	< 6.94	6.94		1	10/4/2018	75-09-2
o-Xylene	< 0.5	0.5	< 2.17	2.17		1	10/4/2018	95-47-6
Tetrachloroethene	< 1.0	1.0	< 6.78	6.78		1	10/4/2018	127-18-4
Tetrahydrofuran	< 2.0	2.0	< 5.90	5.90		1	10/4/2018	109-99-9
Toluene	< 0.5	0.5	< 1.89	1.89		1	10/4/2018	108-88-3
trans-1,2-Dichloroethene	< 0.5	0.5	< 1.98	1.98		1	10/4/2018	156-60-5
Trichloroethene	< 0.5	0.5	< 2.69	2.69		1	10/4/2018	79-01-6
Trichlorofluoromethane(F-11)	< 0.5	0.5	< 2.81	2.81		1	10/4/2018	75-69-4
Trichlorotrifluoroethane(F-113)	< 0.5	0.5	< 3.83	3.83		1	10/4/2018	76-13-1
Vinyl chloride	< 0.5	0.5	< 1.28	1.28		1	10/4/2018	75-01-4
Surr: 4-Bromofluorobenzene	94.4	70-130	%REC					

Airtech Environmental Laboratories (AEL) - AZ 0740

4620 E.Elwood St., Suite 13, Phoenix, AZ 85040 480-968-5888 Fax 480-966-1888

Client:	WOOD	**Client Sample ID:**	N/A
Project:	Cave Creek Landfill	**Project Number:**	14-2017-2034
Lab Order:	18I020	**Collection:**	N/A
Lab ID:	LCS/LCSD	**Matrix:**	Nitrogen

Method QC Data

Date Analyzed: 10/4/2018 Batch: MS011004 Analyst: JJ

Analyses	LCS Result	LCS %REC	LCSD Result	LCSD %REC	T.V.	%RPD	Unit	Qualifier LCS	Qualifier LCSD	Qualifier RPD
VOLATILE ORGANICS IN AIR	**TO-15**							70-130%		<25%
Dichlorodifluoromethane(F-12)	9.6	96.4	9.6	95.9	10.0	0.5	ppbv			
Vinyl Chloride	9.0	90.3	8.7	86.5	10.0	4.3	ppbv			
Trichlorofluoromethane (F-11)	8.8	88.3	8.7	87.0	10.0	1.5	ppbv			
Acetone	9.1	91.3	8.6	85.9	10.0	6.1	ppbv			
1,1-Dichloroethene	9.3	92.8	9.3	93.3	10.0	0.5	ppbv			
Trichlorotrifluoroethane (F-113)	8.8	88.4	8.9	88.5	10.0	0.1	ppbv			
Methylene Chloride	8.5	85.3	8.4	84.3	10.0	1.2	ppbv			
trans-1,2-Dichloroethene	9.3	92.5	9.5	94.5	10.0	2.1	ppbv			
1,1-Dichloroethane	8.9	89.2	9.1	90.6	10.0	1.6	ppbv			
2-Butanone (MEK)	9.6	95.6	9.6	96.0	10.0	0.4	ppbv			
cis-1,2-Dichloroethene	10.0	99.7	9.8	98.1	10.0	1.6	ppbv			
Chloroform	8.9	88.9	8.5	85.0	10.0	4.5	ppbv			
Tetrahydrofuran	9.6	96.2	8.5	85.1	10.0	12.2	ppbv			
1,2-Dichloroethane	9.2	92.2	9.0	89.8	10.0	2.6	ppbv			
Benzene	9.2	91.6	8.9	88.9	10.0	3.0	ppbv			
Trichloroethene	9.4	93.9	9.0	90.4	10.0	3.8	ppbv			
Toluene	9.3	93.0	9.0	90.2	10.0	3.1	ppbv			
Tetrachloroethene	9.9	98.9	9.8	97.9	10.0	1.0	ppbv			
Chlorobenzene	9.7	96.6	9.6	95.7	10.0	0.9	ppbv			
Ethylbenzene	9.1	90.5	9.0	90.4	10.0	0.1	ppbv			
m&p-Xylene	18.6	93.2	17.6	88.1	20.0	5.6	ppbv			
o-Xylene	11.1	111	8.9	89.3	10.0	21.9	ppbv			
1,2-Dichlorobenzene	9.2	91.9	9.2	92.2	10.0	0.3	ppbv			
Surr: 4-Bromofluorobenzene	9.9	98.7	10.0	99.5			%REC			
		70-130%		70-130%						

Airtech Environmental Laboratories (AEL) - AZ 0740

4620 E.Elwood St., Suite 13, Phoenix, AZ 85040 480-968-5888 Fax 480-966-1888

Client:	WOOD	**Client Sample ID:**	NA
Project:	Cave Creek Landfill	**Project Number:**	14-2017-2034
Lab Order:	18I020	**Collection:**	NA
Lab ID:	Standards	**Matrix:**	Nitrogen

AEL ID#	STD Name	Vendor	SGI Order#	Description	CONC.	Accuracy	Exp.Date
S-180620-03	Stock	Spectra Gases	116447993	TO-14 39 Analytes	1.0 ppmv	± 5%	6/25/2019
S-180620-02	Stock	Spectra Gases	116447993	TO-15 25 Analytes	1.0 ppmv	± 5%	6/22/2019
S-180620-01	Stock	Spectra Gases	116447993	15 Additional Compounds	1.0 ppmv	± 5%	6/20/2019
S-171019-01	Stock	Spectra Gases	114560630	TO-15 IS 4 Compounds	1.0 ppmv	± 5%	10/19/2018
A-181003-01	Working Std	AEL Dilution		TO-15 74 Analytes	10 ppbv	± 5%	1/3/2018
A-181003-02	Working IS	AEL Dilution		TO-15 IS 4 Compounds	50 ppbv	± 5%	10/19/2018

Airtech Environmental Laboratories (AEL)

Chain of Custody

4620 E.Elwood Street, Suite 13, Phoenix, AZ 85040 480-968-5888 (phone) 480-966-1888 (fax)

Customer : Wood.	Page 1 of 1		AEL Lab #
Address: 4600 East Washington Street, Suite #600	Sampler: Eric Miller	Phone: (602) 300-8313	18I020
	Project Name: Cave Creek Landfill	Project Number: 14-2017-2034	
City, State, Zip: Phoenix, AZ 85034	Project location: Cave Creek, AZ		
Contact: Natalie Chrisman	P.O. Number:		
Phone: (602) 733-6000 Fax: (602) 733-6100	Fax Results: Y N		
E-Mail Address: Natalie.Chrisman@amecfw.com	E-Mail Results: Y N		

Sample Receipt

Temperature_____ °C
Custody Seals: Yes_____ No_____
Custody Seals Intact: Yes_____ No_____
Total # of Containers:_____

Turn Around Request

_____ 24 Hours _____ 48 Hours
_____ 72 Hours
_____ 5 working Day
✓ Standard 10 Working Days

Sample Type

SVE: soil vapor extraction
A: ambient air
I: indoor air
S: soil vapor
W: water
GW: ground water
WW: waste water

Analyses Requested

Sample Information

AEL Lab #	Serial # Canister	Serial # Grab	Canister (L) or bag	Grab (Min)	Client's Sample Identification	Sampled Date	Sampled Time	Sample Type	Number of Containers	TO-15 full list	TO-15 TPH(GRO)	TO-15 Selet List	8260B AZ Vapor full list	8260B Vapor select list	8015 GRO	8260B Water			DFA tracer cmpd. as TIC
01	1885	193	6 1 bag	1 2 5	SP4-H1-09.19.18	9.19.18	955	SVE	1			✓							
02	E2370	117	6 1 bag	1 2 5	SP3-C1-09.19.18	↓	1000	↓	↓			✓							
03	1813	047	6 1 bag	1 2 5	SP2-C3-09.19.18	↓	1005	↓	↓			✓							
04	1791	105	6 1 bag	1 2 5	SP1-SKIDOUTLET-09.19.18	↓	1010	↓	↓			✓							
			6 1 bag	1 2 5															
			6 1 bag	1 2 5															
			6 1 bag	1 2 5															
			6 1 bag	1 2 5															
			6 1 bag	1 2 5															
			6 1 bag	1 2 5															

Instructions / Special Requirements:

Date:	Time:	Samples Relinquished By:	Received By:
9.19.18	1135	E. Miller	Tam Tom - Airtech

EXHIBIT 1

CAVE CREEK LANDFILL PROGRESS SCHEDULE

ID		Task Mode	Task Name	Duration	Start	Finish
4			SVE Operations	1306 day	Tue 9/15/15	Tue 9/15/20
5			SVE Work Plan	817 days	Tue 9/15/15	Wed 10/31/1
6			SVE Operations Termination Plai	0 days	Wed 6/24/20	Wed 6/24/20
12	✓		Maricopa County Planning and Development Department	4.65 mons	Thu 10/5/17	Mon 2/12/18
13			APS Design of GWTS Phase 1	204 days	Tue 3/13/18	Fri 12/21/18
14			Procurement/GWTS Phase 1 Construction (feasible and appropriate components only)	14.05 mons	Fri 6/1/18	Fri 6/28/19
15			GWTS Phase 1 Construction Completion Memorandum	2 mons	Mon 7/1/19	Fri 8/23/19
17	✓		City of Phoenix Property Procurement for Injection Well	15.1 mons	Thu 10/6/16	Fri 12/1/17
19	✓		GWTS Phase 2 (100% Design Drawings)	6.6 mons	Thu 1/11/18	Fri 7/13/18
20	✓		ADEQ/COP WS Review and Approval of GWTS Phase 2 (100% Design Drawings)	1 mon	Mon 7/16/18	Fri 8/10/18
21			COP PD Review and Approval of Phase 2 (100% Design	4.25 mons	Mon 9/24/18	Fri 1/18/19
22			GWTS Phase 2 Procurement/Construction	4 mons	Mon 1/21/19	Fri 5/10/19
26	✓		Injection Well Design/COP WS Approval/Procurement	140 days	Mon 12/4/17	Fri 6/15/18
27			Injection Well Drilling, Installation and Testing	100 days	Mon 1/28/19	Fri 6/14/19
28			Groundwater Injection Well Installation Report	3 mons	Mon 6/17/19	Fri 9/6/19
29			GWTS Phase 3 (100% Design Drawings)	3 mons	Mon 6/17/19	Fri 9/6/19
30			ADEQ/COP WS Review and Approval of GWTS Phase 3 (100% Design Drawings)	1 mon	Mon 9/9/19	Fri 10/4/19
31			COP PD Review and Approval of Phase 3 (100% Design	1 mon	Mon 10/7/19	Fri 11/1/19
33			GWTS Phase 3 Procurement/Construction (Well Site)	2 mons	Mon 11/4/19	Fri 12/27/19
34			GWTS As-Built Drawings Submitt	2 mons	Mon 12/30/1	Fri 2/21/20
35			GWTS Operations Plan	1 mon	Mon 12/30/1	Fri 1/24/20
36	✓		Downgradient Monitoring Well Access Negotiations	439 days	Fri 10/7/16	Wed 6/13/18
37	✓		2018 Monitoring Well Installation Program	3.25 mons	Mon 8/6/18	Fri 11/2/18
41			2018 Monitoring Well Installation Report	2 mons	Mon 11/26/18	Fri 1/18/19
42			Groundwater Characterization Work Plan for Old Landfill	3.5 mons	Mon 1/21/19	Fri 4/26/19
43			Groundwater Model Update	6 mons	Mon 9/9/19	Fri 2/21/20
44			**1st Quarter Progress Report**	**782 days**	**Thu 6/15/17**	**Mon 6/15/20**
50			**2nd Quarter Progess Report**	**782 days**	**Fri 9/15/17**	**Tue 9/15/20**
55			**3rd Quarter Progress Report**	**782 days**	**Thu 12/15/16**	**Sun 12/15/19**
60			**4th Quarter Progess Report**	**783 days**	**Wed 3/15/17**	**Sun 3/15/20**

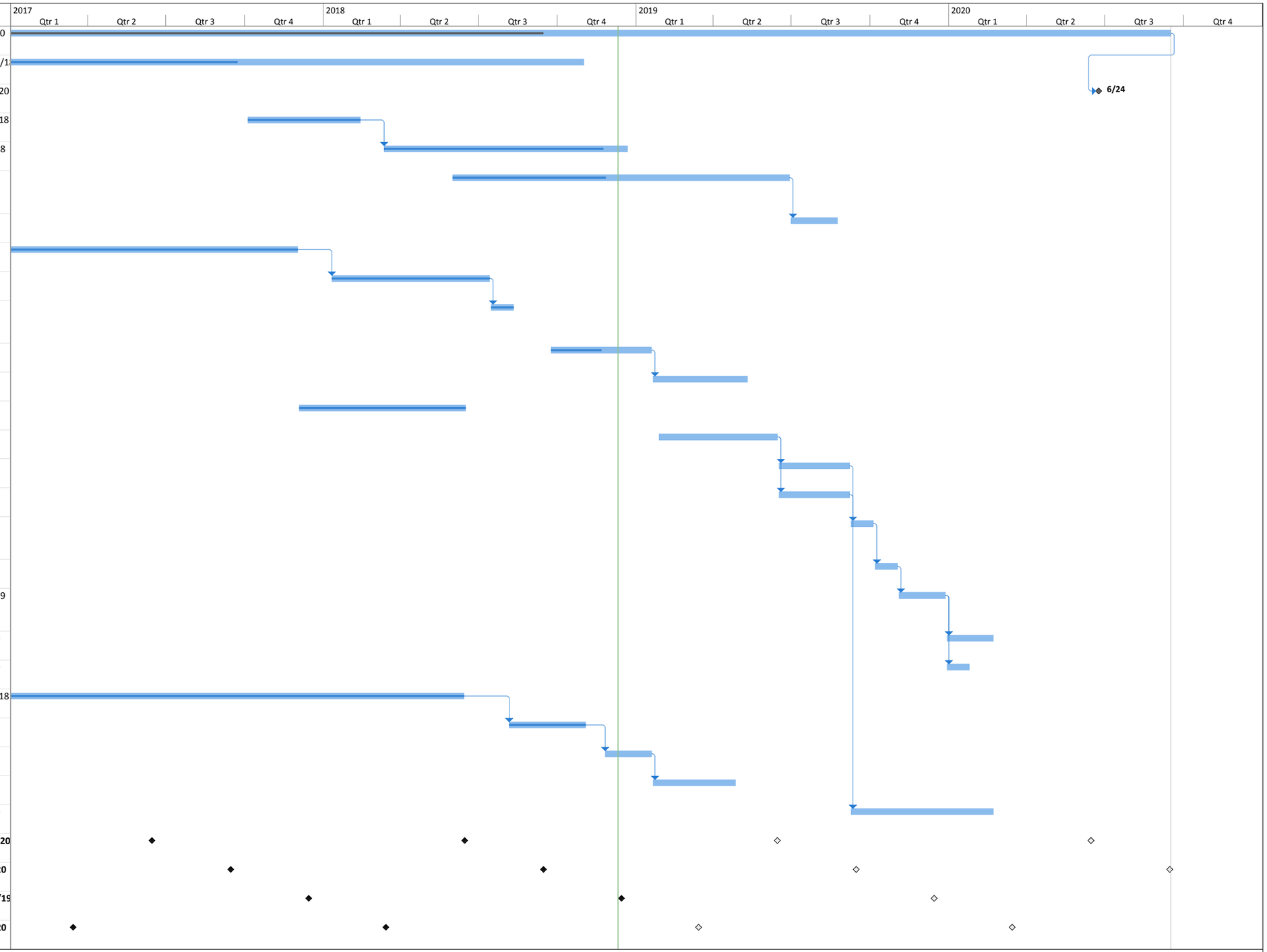

EXHIBIT 1
Project: CCL Progress Schedule
Date: Tue 12/11/18

Task		Summary		External Milestone		Inactive Summary		Manual Summary Rollup		Finish-only		Manual Progress	
Split		Project Summary		Inactive Task		Manual Task		Manual Summary		Deadline			
Milestone		External Tasks		Inactive Milestone		Duration-only		Start-only		Progress			

ID	Task Mode	Task Name	Duration	Start	Finish
1		GWTS Operations Plan	1 mon	Mon 12/30/19	Fri 1/24/20
2		ADEQ Review and Approval of GWTS Operations Plan	1 mon	Mon 1/27/20	Fri 2/21/20
3		Groundwater Treatment Operations	7045 days	Mon 2/24/20	Fri 2/22/47
4		Groundwater Modeling Upda	3 mons	Mon 12/27/21	Fri 3/18/22
5		On-Site ISCO Treatment Work Plan (if deemed	3 mons	Mon 3/21/22	Fri 6/10/22
6		Groundwater Extraction Termination Plan	3 mons	Thu 1/25/46	Wed 4/18/46
7		**1st Quarter Progress Report**	**6523 days**	**Tue 6/15/21**	**Thu 6/14/46**
37		**2nd Quarter Progress Report**	**6524 days**	**Wed 9/15/21**	**Sat 9/15/46**
67		**3rd Quarter Progress Report**	**6785 days**	**Tue 12/15/20**	**Sat 12/15/46**
98		**4th Quarter Progress Report**	**6731 days**	**Mon 3/15/21**	**Mon 12/31/4**

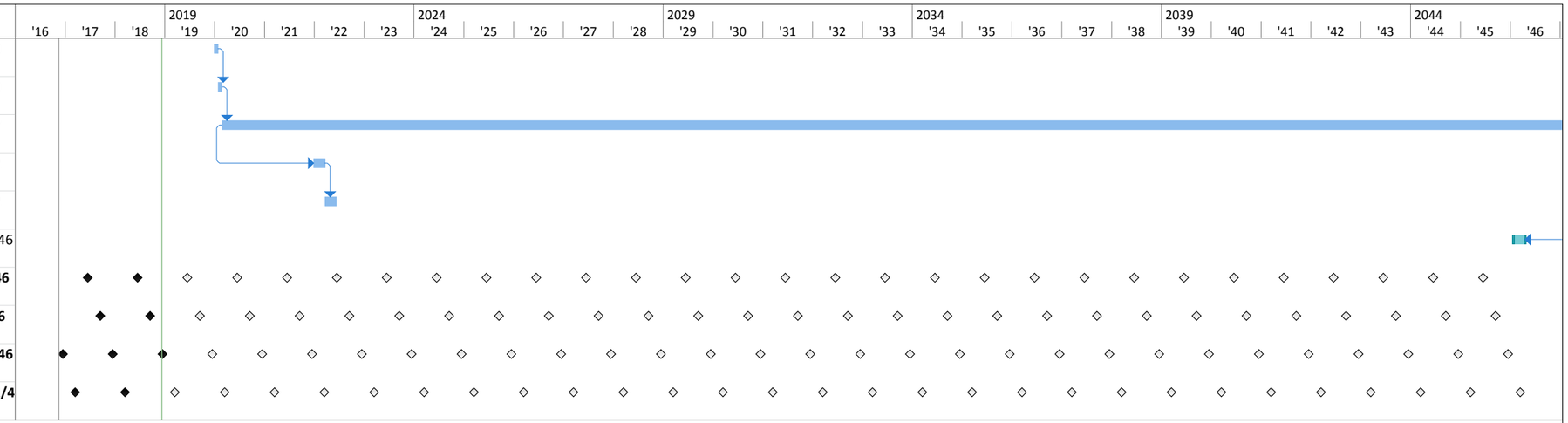

EXHIBIT 1
Project: CCL Progress Schedule
Date: Tue 12/11/18

Task		Summary		External Milestone		Inactive Summary		Manual Summary Rollup		Finish-only		Manual Progress	
Split		Project Summary		Inactive Task		Manual Task		Manual Summary		Deadline			
Milestone		External Tasks		Inactive Milestone		Duration-only		Start-only		Progress			