wood.

Second Quarter 2018 Status Report
Maricopa County Cave Creek Landfill
Phoenix, Arizona

Prepared on behalf of:

Maricopa County Risk Management
222 North Central Avenue, Suite 1110
Phoenix, Arizona 85004

and

Maricopa County Waste Resources & Recycling
2919 West Durango Street
Phoenix, Arizona 85009

Prepared by:

Wood Environment & Infrastructure Solutions, Inc.
4600 East Washington Street, Suite 600
Phoenix, Arizona 85034

Registered Professional Engineer (Civil)
CERTIFICATE NO. 63610
EMILY H. LODOLCE
DATE SIGNED 9/13/18
ARIZONA U.S.A.
Expires:03/31/20

September 13, 2018

Project No. 14-2017-2034

TABLE OF CONTENTS

		Page
EXECUTIVE SUMMARY		ES-1
1.0	INTRODUCTION	1
2.0	SUMMARY OF MEASURES TAKEN TO IMPLEMENT THE RAP	1
3.0	DATA COLLECTED DURING THE REPORTING PERIOD	3
3.1	Groundwater Elevations	3
3.2	Groundwater Quality Monitoring	3
3.3	Soil Vapor Monitoring	4
3.4	SVE System Performance Monitoring	4
4.0	DISCUSSION OF COLLECTED DATA	5
4.1	Groundwater Elevations	5
4.2	Groundwater Quality	5
4.3	Soil Vapor	6
4.4	SVE System Performance	7
5.0	FUTURE ACTIVITIES	7
6.0	REFERENCES	9

LIST OF TABLES

Table 1 Well Construction Summary
Table 2 Groundwater Elevation, Gradient, and Flow Direction
Table 3 Groundwater Analytical Results – Summary of VOC Data
Table 4 Soil Vapor Analytical Results – Wellhead TO-15 Analysis Data
Table 5 Soil Vapor Analytical Results – Process Sample TO-15 Analysis Data
Table 6 Soil Vapor Extraction Mass Removal

LIST OF FIGURES

Figure 1 Well Map
Figure 2 Estimated Extent of TCE Plume in Groundwater – May 2018
Figure 3 Shallow Zone TCE Soil Vapor Concentrations – June 2018
Figure 4 Middle Zone TCE Soil Vapor Concentrations – June 2018
Figure 5 Deep Zone TCE Soil Vapor Concentrations – June 2018
Figure 6 Above Water Table TCE Soil Vapor Concentrations – June 2018
Figure 7 Deep Zone 1,1-DCE Soil Vapor Concentrations – June 2018
Figure 8 SVE System Process Flow Diagram
Figure 9 Mass Removal of VOCs – through June 2018

LIST OF APPENDICES

Appendix A Laboratory Reports of Analysis

LIST OF EXHIBITS

Exhibit 1 Cave Creek Landfill Progress Schedule

Registered Professional Engineer (Civil)
CERTIFICATE NO. 63610
EMILY H. LODOLCE
DATE SIGNED 9/13/18
ARIZONA U.S.A.
Expires:03/31/2020

EXECUTIVE SUMMARY

In response to the detection of elevated levels of trichloroethene (TCE) in groundwater underlying Cave Creek Landfill, Maricopa County entered into a Consent Order in 1999 with the Arizona Department of Environmental Quality to characterize the nature and extent of site groundwater contamination, develop a Remedial Action Plan (RAP) to address contamination impacts, implement the RAP, and provide quarterly status updates on project activities. This status report documents site assessment and remediation efforts conducted pursuant to the RAP during the second calendar quarter of 2018 (April through June 2018).

Groundwater Data Collection and Discussion. Quarterly groundwater levels were monitored on May 7 through May 10, 2018 and June 21, 2018. During the reporting period, groundwater flowed 176.2 degrees from north with a gradient of 0.002 feet per foot. Groundwater elevations at the site increased by an average of 0.1 feet (ft) from February 2018 to May 2018. This is a change from recent quarters, as previously groundwater elevations had been declining by an average of 1 to 2 feet per year.

Maricopa County collected quarterly groundwater samples on May 7 through May 10, 2018 and June 21, 2018. The analytical results from the Second Quarter 2018 indicate that the highest concentrations of TCE underlie the southern and western portion of the New Landfill (near TSSV-03-PZ and MW-10). The concentrations of TCE in duplicate samples collected from TSSV-03-PZ were 440 and 400 micrograms per liter (µg/L). This is the third consecutive quarter that TCE concentrations in TSSV-03-PZ have declined, suggesting that the higher concentrations previously observed at this well may have migrated to the south. The TCE concentration in the sample collected from MW-02, 1,200 feet downgradient of TSSV-03-PZ, was 87 mg/L, which is lower than the previous quarter's concentration of 130 µg/L. TCE is present above the Arizona Water Quality Standard for TCE of 5 µg/L in off-site downgradient wells MW-05 (31 µg/L) and MW-07 (31 µg/L). TCE concentrations in duplicate samples collected from MW-08, south of the Old Landfill, were 150 and 150 µg/L, essentially unchanged from the First Quarter 2018 observed concentration of 140 and 150 µg/L.

Soil Vapor Data Collection and Discussion. Maricopa County collected quarterly soil vapor samples from June 6, 2018 through June 20, 2018. The analytical results from the Second Quarter 2018 indicate that TCE concentrations in soil vapor samples collected from the shallow zone were 20 milligrams per cubic meter (mg/m^3) or less. In the middle zone, maximum TCE concentrations were present at TSSV-02-M (11 mg/m^3) and TSSV-01-M (42 mg/m^3). The highest TCE concentrations in the deep zone were observed in a sample from TSSV-01-D and duplicate samples from SVE-04, with concentrations of 350 mg/m^3 and 470 and 370 mg/m^3, respectively. In general, compared to the previous two quarters, TCE concentrations in soil vapor in the shallow, middle, and deep depth profiles decreased, particularly at TSSV-04-D and SVE-03, where TCE concentrations have declined by one to two orders of magnitude. TCE concentrations in soil vapor in the above water table zone in the vicinity of MW-09 and TSSV-05-PZ increased compared to the previous two quarters and were 1,000 mg/m^3 and 310 mg/m^3, respectively; these were also the highest observed concentrations of TCE in site soil vapor during this quarter.

SVE System Performance. Based on the results of the SVE system performance sampling on May 23, 2018, the soil vapor treatment system captured or destroyed over 98.8% of extracted volatile organic compounds (VOCs), as defined by Maricopa County Air Quality Department Rule 100 Section 200.113, and over 65.7% of Federal Hazardous Air Pollutants, during the reporting period. The calculated total mass of VOCs removed from the vadose zone since full-scale SVE system startup on September 15, 2015 is 29,996 pounds (lbs). During the Second Quarter 2018, the SVE system removed 2,802 lbs of VOCs, which is equivalent to a daily mass removal rate of approximately 30 lbs per day.

1.0 INTRODUCTION

In response to the detection of elevated levels of trichloroethene (TCE) in groundwater underlying Cave Creek Landfill, Maricopa County entered into a Consent Order (CO) in 1999 with the Arizona Department of Environmental Quality (ADEQ) to characterize the nature and extent of site groundwater contamination. Since that time, the CO has been revised based on the results of multiple site investigations, and the current CO (ADEQ Identification Number 30604, Docket No. S-2-10) requires Maricopa County to complete groundwater characterization, develop a revised Remedial Action Plan (RAP), and complete ADEQ-approved remedial activities (ADEQ, 2010). Maricopa County submitted the final version of the RAP in May 2016 which includes soil vapor extraction (SVE) to address TCE-impacted vapor that serves as a source of groundwater contamination and an on-site pump and treat groundwater system to contain and remediate the existing groundwater plume (Amec Foster Wheeler Environment & Infrastructure, Inc. [Amec Foster Wheeler], 2016). ADEQ approved the RAP in their letter dated November 23, 2016 (ADEQ, 2016a).

Section IV of the CO requires quarterly status reports to document Maricopa County's progress implementing the stipulations of the CO and provide evidence of regulatory compliance (ADEQ, 2016b). This status report documents site assessment and remediation efforts conducted pursuant to the RAP during the second calendar quarter of 2018 (April through June 2018).

Wood Environment and Infrastructure Solutions, Inc. (Wood) prepared this quarterly report on behalf of Maricopa County Risk Management and Maricopa County Waste Resources & Recycling under the terms and conditions of Environmental Services Contract 13134-ITN.

2.0 SUMMARY OF MEASURES TAKEN TO IMPLEMENT THE RAP

Activities conducted in support of RAP implementation during the reporting period are as follows:

- Maricopa County collected quarterly groundwater levels on May 7 through May 10, 2018.
- Maricopa County collected quarterly groundwater samples on May 7 through May 10, 2018.
- Xenco Laboratories, an environmental laboratory certified by the Arizona Department of Health Services (ADHS) (certification number AZ0757), analyzed the groundwater samples.
- Maricopa County collected quarterly soil vapor samples on June 6, June 8, June 11, June 13, June 15, June 18, and June 20, 2018.
- Airtech Environmental Laboratories (AEL), an environmental laboratory certified by the ADHS (certification number AZ0740), analyzed the soil vapor samples for volatile organic compounds (VOCs) in air by United States Environmental Protection Agency (EPA) Method TO-15.
- Maricopa County collected monthly SVE system performance samples on April 23, May 23, and June 20, 2018.
- AEL analyzed the monthly SVE system performance samples for VOCs in air by EPA Method TO-15.
- On behalf of Maricopa County, Wood submitted the quarterly SVE system performance report for compliance with the Maricopa County Air Quality permit on June 22, 2018.
- The SVE system operated in the Second Quarter 2018 from April 2 to June 30, 2018.

- The Arizona Department of Water Resources issued a Poor Quality Groundwater Withdrawal Permit (Number 59-228126.0000) on June 22, 2018 for future groundwater extraction activities associated with implementation of the Site RAP.
- Maricopa County completed the following activities with regards to the design, permitting, and construction of the Groundwater Treatment System (GWTS):
  - Issued a request for proposal to build Phase 1 (the treatment system) on May 24, 2018 to multiple contractors; the bid walk was held on June 1, 2018.
  - Continued development of the Phase 2 (conveyance pipeline) design with potholing for existing utilities.
  - Contracted with a landscape architect for landscaping and plant salvage design for Phase 3 (the injection well site) and progressed the associated perimeter wall and site grading design plans; submitted a site plan of the well site for preliminary site review by the City of Phoenix Planning and Development Department on June 20, 2018.
- Maricopa County advanced the Summer 2018 Drilling Program through completion of the following activities:
  - Prepared technical specifications for the monitoring wells (MW-11, MW-12, and MW-13) and the planned injection well (IW-01) and distributed the specifications to prospective drillers. Conducted a pre-bid site walk for drillers on May 11, 2018; bids were received on May 25, 2018. Reviewed driller bids and began contracting negotiations with the selected firms (Yellow Jacket Drilling and Layne Christensen).
  - Continued progressing the Sonoran Preserve well (i.e., MW-11) lease agreement between the City of Phoenix and Maricopa County; the lease agreement was fully executed as of June 18, 2018.
  - Completed a field survey of MW-11 temporary construction areas on the Sonoran Preserve.
  - Completed native plant inventory activities at the MW-11 and planned injection well IW-01 well sites; an intent to clear was submitted to the Department of Agriculture.
  - Conducted drilling site preparation activities at MW-13, on the Old Landfill.
  - Distributed a community notice flyer regarding general well installation activities to the RAP distribution list on June 21, 2018.
- Maricopa County completed the following activities supporting the construction, drilling, and testing of IW-01, located on COP property on Sleepy Ranch Road:
  - Fully executed an Amendment to the Intergovernmental Agreement between Maricopa County and the City of Phoenix for development of the IW-01 well site.
  - Submitted a Poor Quality Groundwater Withdrawal Permit (PQGWP) application for extraction from IW-01 for testing and was informed by ADWR that the withdrawal will be covered under the previously issued PQGWP for the Site.
  - Distributed a community notice flyer regarding IW-01 installation activities to neighbors adjacent to the IW-01 site on May 24, 2018.
  - Completed utility location activities on the property.

- Maricopa County responded to ADEQ's comments on the Fourth Quarter 2017 Status Report (ADEQ, 2018) on May 4, 2018 and held a conference call with ADEQ to further discuss comments on May 17, 2018.

Exhibit 1 summarizes the progress of activities programmed for Cave Creek Landfill RAP implementation. The schedule has been updated with the current status of project tasks including the postponement of the injection well drilling program until early 2019 due to scheduling constraints with the driller and an effort not to drill in the neighborhood during the holidays. The revised schedule projects that construction of Phase I will begin in fall 2018 and routine GWTS operations will begin in early 2020.

3.0 DATA COLLECTED DURING THE REPORTING PERIOD

3.1 Groundwater Elevations

On behalf of Maricopa County, Wood collected quarterly groundwater levels on May 7 through May 10, 2018. Locations and construction details of site wells are presented in **Figure 1** and **Table 1**, respectively. Groundwater elevations and the calculated groundwater flow direction and gradient for the reporting period are presented in **Table 2**. Contoured water table elevations and the calculated flow direction and gradient are also shown in **Figure 2**. During the reporting period, the direction of groundwater flow was 176.2 degrees from north with a gradient of 0.002 feet per foot (ft/ft). As in previous quarters, the groundwater elevation at TSSV-04-PZ appeared anomalously low and was not used in the flow direction and gradient calculations or contouring of the water table surface.

3.2 Groundwater Quality Monitoring

Maricopa County conducts groundwater quality monitoring at the Cave Creek Landfill in accordance with the requirements of 40 Code of Federal Regulations (CFR) 258.50, as detailed in the Post-Closure Care Plan for Maricopa County Solid Waste Landfills (Post-Closure Care Plan) (Hydro Geo Chem, 2014). Groundwater samples from applicable Cave Creek Landfill wells are collected and analyzed for VOCs on a quarterly basis (typically February, May, August, and November). Based on correspondence with ADEQ, Maricopa County is currently evaluating quarterly samples for naphthalene, a 40 CFR 258 Appendix II constituent, at compliance wells (per the Post-Closure Care Plan, these are MW-02, MW-03, MW-04, MW-05, MW-06, MW-07, MW-08, and PW) to assess its presence at the site (email communication with ADEQ, 2017). The naphthalene samples are analyzed using EPA Method 8270C SIM, which allows for a lower laboratory reporting limit than analysis with EPA Method 8260B. Evaluation of naphthalene using EPA Method 8270C SIM began in the Third Quarter of 2017 and is projected to end in the Third Quarter of 2018. In addition to the evaluation of organic constituents, Maricopa County also samples compliance wells semi-annually for 40 CFR 258 Appendix I inorganic constituents (total metals) and general chemistry parameters.

Wood, on behalf of Maricopa County, collected quarterly groundwater samples on May 7 through May 10, 2018. The following 17 wells were sampled: EW-01, MW-02, MW-03, MW-04, MW-05, MW-06, MW-07, MW-08, MW-09, MW-10, PW, TSSV-02-PZ, TSSV-03-PZ, TSSV-04-PZ, TSSV-05-PZ, TSSV-06-PZ, and TSSV-07-PZ.

Samples were collected using passive sampling devices (i.e., passive diffusion bags [PDBs]). The sampling devices were deployed in February of 2018 during the First Quarter 2018 groundwater sampling event. Unfortunately, sampling and analysis issues required re-deployment of PDBs in for select wells and analytes in May 2018. The original PDBs deployed in MW-04 broke during retrieval and the compliance well samples evaluated for naphthalene were lost by the laboratory during an intralaboratory shipment. Therefore, VOCs

at all wells except for MW-04 were sampled between May 7 and May 10, 2018, while naphthalene at the compliance wells and VOCs at MW-04 were sampled on June 21, 2018.

Xenco analyzed the groundwater samples for VOCs in water by EPA Method 8260. Samples collected from the compliance wells were additionally analyzed for naphthalene by EPA Method 8270C SIM. Laboratory results of analyses for samples collected during the reporting period are included in **Appendix A**.

Groundwater analytical results for the Second Quarter 2018 are presented in **Table 3**. The estimated extent of the TCE plume in groundwater and results of sampling at individual wells are shown in **Figure 2**.

3.3 Soil Vapor Monitoring

Maricopa County conducts quarterly soil vapor monitoring at the Cave Creek Landfill to evaluate the concentration and extent of contaminated soil vapors in the vadose zone. Wood, on behalf of Maricopa County, collected quarterly soil vapor samples from 42 site wells on June 6, June 8, June 11, June 13, June 15, June 18, and June 20, 2018.

Wood collected the soil vapor samples using laboratory-supplied 1.0-liter passivated vacuum canisters. AEL analyzed the soil vapor samples for VOCs in air by EPA Method TO-15. Soil vapor analytical results for the Second Quarter 2018 are presented in **Table 4**. The estimated extent of the TCE plume in soil vapor in the shallow, middle, deep, and above water table zones is shown in **Figures 3**, **4**, **5**, and **6**, respectively. The estimated extent of 1,1-Dichloroethene (1,1-DCE) in soil vapor in the deep zone is shown in **Figure 7**. Laboratory results of analyses for samples collected during the reporting period are included in **Appendix A**.

3.4 SVE System Performance Monitoring

The SVE system is part of the remedy identified in the RAP and provides source control (extraction of contaminated soil vapors) at the site. During the reporting period, the system continuously extracted vapor from SVE-03 and SVE-04 from April 2 to June 22, 2018 with a short manual shutdown from May 25 through June 6, 2018 for the Memorial Day holiday. Other system shutdowns during this time were of shorter duration and a result of manual shutdowns in advance of Granular Activated Carbon (GAC) vessel changeouts. The Carbon Adsorption System (CAS) treated the extracted vapor under pressurized flow (**Figure 8**).

The SVE system consists of three GAC vessels, identified as C1, C2, and C3, and one Hydrosil (i.e., potassium permanganate impregnated media) vessel, identified as H1. During routine operation, two GAC vessels are operated in lead/lag series configuration and the Hydrosil vessel is operated as the third and final vessel in the series. The remaining GAC vessel is a standby (offline) vessel and is placed into service as a lag vessel when the lead GAC vessel is spent and removed from service. During a change-out event, the lag vessel is moved into the lead position and the standby vessel is moved into the lag position. GAC is replaced in the former lead vessel and it becomes the new standby vessel.

Thirteen GAC vessel change-outs were conducted during the reporting period. The change-outs occurred on the following dates:

- April 2, 2018
- April 9, 2018
- April 16, 2018

- April 20, 2018
- April 27, 2018
- May 7, 2018
- May 14, 2018
- May 18, 2018
- June 11, 2018
- June 18, 2018
- June 29, 2018

A Hydrosil change-out occurred on April 20, 2018.

Discharge of treated effluent from the SVE system is permitted by Maricopa County Air Quality Permit 980398 (Maricopa County Air Quality Department, 2016a). Under this permit, Maricopa County is required to collect monthly samples to calculate 12-month rolling total emissions and quarterly performance samples to demonstrate compliance with the site air quality permit. Wood collected monthly process samples on April 23 and June 20, 2018 and the monthly and quarterly performance sample on May 23, 2018. Process samples were collected with laboratory-supplied 1.0-liter passivated vacuum canisters at four locations: entering the CAS (at sample port [SP]-01), after the lead carbon vessel (at SP-02), after the lag carbon vessel (at SP-03), and after the Hydrosil vessel (at SP-04). These samples are named using the following convention: the sample port (e.g., SP-02) – the vessel that is monitored (e.g., C1 or H1) – the sample date in MMDDYY format. Sample locations are shown in **Figure 8**.

AEL analyzed the process samples for VOCs in air by EPA Method TO-15. Results of the process sample analysis are presented in **Table 5**. Laboratory results of analyses for samples collected during the reporting period are included in **Appendix A**.

4.0 DISCUSSION OF COLLECTED DATA

4.1 Groundwater Elevations

For the second consecutive quarter, groundwater elevations at the site have remained stable or increased compared to elevations observed in 2017. This is a change from recent quarters, as previously groundwater elevations have been declining by an average of 1 to 2 feet per year. Groundwater elevations at off-site monitoring wells MW-05 and MW-06 increased more than 0.20 feet from the First Quarter 2018 measurement, and groundwater elevations at EW-01, MW-02, MW-07, MW-09, MW-10, and TSSV-07-PZ increased more than 0.10 feet from the First Quarter 2018 measurement. Water level increases were observed at wells located at both the southern and northern portions of the site. Groundwater flow direction continues to be nearly due south and the gradient is 0.002 ft/ft. The arrested decline of average site-wide groundwater elevations could suggest an off-site influence that is contributing recharge to the aquifer, possibly the City of Phoenix Aquifer Storage and Recovery wells along Cave Creek Road, or that the rate of groundwater extraction by nearby public utilities has declined. More groundwater elevation data are needed to evaluate whether this change is temporary or long-term.

4.2 Groundwater Quality

The analytical results from the Second Quarter 2018 indicate that the highest concentrations of TCE underlie the southern and western portion of the New Landfill (near TSSV-03-PZ and MW-10). The concentration of TCE in the original and duplicate samples collected from TSSV-03-PZ were 440 and 400 µg/L, respectively. This is the third consecutive quarter that TCE concentrations in TSSV-03-PZ have declined, suggesting that

the higher concentrations previously observed at this well may have migrated to the south. The TCE concentration in the sample collected from MW-02, 1,200 feet downgradient of TSSV-03-PZ, was 87 mg/L, which is lower than the previous quarter's concentration of 130 µg/L. TCE is present above the Arizona Water Quality Standard (AWQS) for TCE of 5 µg/L in off-site downgradient wells MW-05 (31 µg/L) and MW-07 (31 µg/L). TCE concentrations in the original and duplicate samples collected from MW-08, in the southern portion of the Old Landfill, were 150 and 150 µg/L, respectively, essentially unchanged from the First Quarter 2018 observed concentration of 140 and 150 µg/L.

Co-contaminants 1,1-DCE and PCE have been observed in groundwater samples collected from site monitoring wells for some time. As site-wide concentrations of TCE have generally decreased from the previous quarter, so too have the concentrations of PCE and 1,1-DCE. 1,1-DCE was not detected above the laboratory reporting limit in any of the samples collected during the Second Quarter 2018. The analytical results from the Second Quarter 2018 indicate that the highest concentrations of PCE are observed in the wells that have the highest concentrations of TCE. The original and duplicate samples from TSSV-03-PZ, for example, have PCE concentrations of 5.5/5.2 µg/L (above the AWQS for PCE of 5 µg/L), and the sample collected from MW-10 has a PCE concentration of 7.3 µg/L. The sample collected from MW-02 had a PCE concentration of 1.8 µg/L, and the sample collected from MW-04 had a PCE concentration of 0.88 µg/L. No other samples collected from site monitoring wells contained concentrations of PCE, 1,1-DCE, or other constituent above the respective AWQS.

4.3 Soil Vapor

The analytical results from the Second Quarter 2018 indicate that TCE concentrations in soil vapor samples collected from the shallow zone were 20 milligrams per cubic meter (mg/m^3) or less (**Figure 3**). In the middle zone (**Figure 4**), TCE concentrations continue to decline from the previous two quarters, with the sample from TSSV-02-M having a concentration of 11 mg/m^3 and the sample from TSSV-01-M having a concentration of 42 mg/m^3. The highest TCE concentrations in the deep zone (**Figure 5**) were observed in TSSV-01-D and SVE-04, with concentrations of 350 mg/m^3 and 470/370 mg/m^3 (original and duplicate), respectively. TCE concentrations in soil vapor in the above water table zone were highest in MW-09 and TSSV-05-PZ, at 1,000 mg/m^3 and 310 mg/m^3, respectively (**Figure 6**); these were also the highest observed concentrations of TCE in site soil vapor during this quarter. The second highest concentrations of TCE in site soil vapor occur in the deep zone around TSSV-01-D and SVE-04.

In general, compared to the previous two quarters, TCE concentrations in soil vapor in the shallow, middle, and deep depth profiles decreased, in particular at TSSV-04-D and SVE-03, where TCE concentrations have declined by one to two orders of magnitude. The notable decrease in TCE concentrations at TSSV-04-D and SVE-03 is likely attributable to the SVE system successfully remediating the target treatment area. However, TCE concentrations in soil vapor in the above water table zone in the vicinity of MW-09 and TSSV-05-PZ increased compared to the previous two quarters. The cause of this increase is unknown but radius of influence testing (Amec Foster Wheeler, 2017) performed on SVE-03 in 2017 revealed a connection between SVE-03 and TSSV-05-PZ, which could be evidence of a possible preferential pathway between the deep and above water table zones. Further soil vapor concentration data are needed to confirm this increase in the above water table zone.

1,1-DCE is frequently observed in soil vapor samples collected from wells in and near the Old Landfill (**Figure 7**). During Second Quarter 2018, the highest concentrations of 1,1-DCE in the soil vapor occurred in the deep zone at SVE-04, which, at 250/190 mg/m^3 (original/duplicate), is two to three orders of

magnitude higher than the next-highest concentration of 1,1-DCE observed at any of the other wells that were sampled.

4.4 SVE System Performance

Based on the results of SVE system performance sampling, the CAS captured or destroyed over 98.8% of extracted VOCs, as defined by Maricopa County Air Quality Department Rule 100 Section 200.113, and over 65.7% of Federal Hazardous Air Pollutants (HAPs), during the reporting period. It is notable that there has been a recent increase in HAPs emissions. This is attributed to increasing influent methylene chloride concentrations associated with extraction from SVE-04. Maricopa County is monitoring these increases closely and will re-evaluate the SVE system operating strategy if necessary to control the emissions and comply with the terms of the air quality permit.

The calculated total mass removed on a monthly basis from the vadose zone in 2018 is presented in **Table 6**. Mass removal rates are based on actual hours of operation (hour meter readings) and the estimated hourly VOC extraction rate derived from performance testing. During the reporting period, the SVE system removed 2,802 pounds (lbs) of VOCs over a time period of 93 days, which is equivalent to a daily mass extraction rate of approximately 30 lbs per day. Since operations began on September 15, 2015, the calculated total mass of VOCs removed through June 20, 2018 is 29,996 lbs. The cumulative mass of VOCs removed since SVE system start up is presented in **Figure 9**. Also shown in **Figure 9** is the estimated mass removed per month, normalized by dividing by the calculated mass by the instantaneous system flow rate observed during performance testing that month. In general, the normalized mass removed per month is steadily decreasing as the SVE system removes more mass from the subsurface.

The SVE system operated for 65% of the time in the Second Quarter 2018. The system was commonly turned off for the weekend if on Friday the field readings to estimate VOC removal efficiency of the CAS indicated that the removal efficiency on Saturday or Sunday would fall below the minimum VOC removal efficiency of 90% mandated by the air quality permit. The system was also turned off for several hours approximately every week to change the GAC order and for a week in May/June 2018. Monthly testing of the CAS indicates that the system is operating as intended and is compliant with the air quality permit issued by Maricopa County.

5.0 FUTURE ACTIVITIES

Maricopa County will continue to conduct quarterly monitoring as described in Section 3.0 of this report. In addition to the reporting activities targeted for completion during the Third Quarter of 2018 listed in Section 2.0, upcoming activities scheduled through the Fourth Quarter of 2018 include:

- Continued operation of the SVE system for source control.
- Maricopa County will continue to advance the design, permitting, and construction of the GWTS with the following activities:
  - Select a contractor for Phase 1 construction;
  - Complete design plans for Phase 2, submit the plans to ADEQ and the COP for review, permit the pipeline, select a contractor, and begin construction of the pipeline; and
  - Complete design plans for the perimeter wall of Phase 3 and submit the plans to the COP for permitting of the perimeter wall.

- Maricopa County will progress the summer 2018 Drilling Program by completing the installation of MW-11, MW-12, and MW-13 no later than early November 2018. (Due to driller scheduling constraints, the drilling and installation of IW-01 has been postponed until January 2019.)
- Maricopa County will continue the following activities with regards to development of the IW-01 well site, located on COP property on Sleepy Ranch Road:
  - Distribute an informational flyer to notify the Sleepy Ranch Road neighbors that drilling of IW-01 has been postponed until January 2019; and
  - Begin construction of the perimeter wall and site grading.

6.0 REFERENCES

Amec Foster Wheeler Environment & Infrastructure, Inc. (Amec Foster Wheeler), 2016. *Draft Final Revised Remedial Action Plan*. Prepared on behalf of the Maricopa County Risk Management and Maricopa County Waste Resources & Recycling Management. May 6, 2016.

Amec Foster Wheeler, 2017. *Fourth Quarter 2017 Status Report, Maricopa County Cave Creek Landfill, Phoenix, Arizona*. Prepared on behalf of the Maricopa County Risk Management and Maricopa County Waste Resources & Recycling Management. March 15, 2018. Revision submitted May 4, 2018.

Arizona Department of Environmental Quality (ADEQ), 2010. *Consent Order in the matter of Cave Creek Landfill located at 8.3 miles east of I-17 approximately ½ mile south of Carefree Highway Phoenix, Maricopa, Arizona, Azurite Place ID 1169*. Docket No. S-2-10. Filed on January 19, 2010.

ADEQ, 2016a. *Letter to Ms. Rita Neill of Maricopa County from Ms. Laura Malone of ADEQ regarding Approval of the Revised Remedial Action Plan (RAP) dated 5-6-2016*; *Maricopa County, Cave Creek Landfill; Azurite Place ID Number 1169*. PRU16-513. Dated November 23, 2016.

ADEQ, 2016b. *Amendment No. 1 to Consent Order in the matter of Cave Creek Landfill located at 8.3 miles east of I-17 approximately ½ mile south of Carefree Highway Phoenix, Maricopa, Arizona, Azurite Place ID 1169*. Docket No. S-2-10. Signed on September 27, 2016.

ADEQ, 2018. Letter to *Ms. Rita Neill of Maricopa County from Ms. Tracy Neal of ADEQ regarding Fourth Quarter 2017 Status Report Maricopa County Cave Creek Landfill*. PRU18-137. Dated March 15, 2018.

Email communication with ADEQ, 2017. *Plan to Further Evaluate Naphthalene at Cave Creek Landfill*. From Natalie Chrisman Lazarr, PE, Project Manager with Wood, to Richard Olm, PE, Senior Environmental Engineer with ADEQ. Dated June 30, 2017.

Hydro Geo Chem, Inc. (Hydro Geo Chem), 2014. *Post-Closure Care Plan for Maricopa County Solid Waste Landfills*. Prepared for Maricopa County Waste Resources and Recycling. June 19, 2014.

Maricopa County Air Quality Department, 2016a. *Air Quality Permit to Operate and/or Construct Issued to Cave Creek Landfill. Permit Number 980398*. Revision Date: June 16, 2016. Expiration Date: November 30, 2021.

TABLES

Table 1. Well Construction Summary

Cave Creek Landfill, Maricopa County

WellName	Location Type	ADWR ID	Northing (NAD83SP Int'l Ft)	Easting (NAD83SP Int'l Ft)	TOC (ft amsl)	Ground Surface (ft amsl)	Total Well Depth (ft)	Date Installed	Casing Diameter (I.D.)	CasingType	Top Screen Depth (ft bgs)	Bottom Screen Depth (ft bgs)	Top Screen Elevation (ft amsl)	Pump Intake Depth (ft bgs)	Pump Intake Elevation (ft amsl)	Comment
EW-01	Groundwater	55-226136	1012934.6	675653.9	1,854.5	1,852.9	830	8/20/2016	12	HSLA	729.1	809.4	1,123.8	-	-	-
MW-01	Groundwater	55-538298	1013459.3	675955.8	1,895.6	1,895.6	820	5/1/1993	6 inch	LCS	660	820	1,235.6	-	-	Originally installed at 695 ft bgs; moved to 740 ft bgs (at bottom of pump) on 3/2/2005.
MW-02	Groundwater	55-538299	1012899.4	675673.9	1,856.0	1,855.0	805	5/1/1993	6 inch	LCS	630	805	1,225.0	-	-	Originally installed at 675 ft bgs; moved to 704 ft bgs (at bottom of pump) on 3/1/2005; moved to 714 ft bgs on 6/26/2009. Pump removed 8/2017
MW-03	Groundwater	55-216293	1013323.0	676495.2	1,866.4	1,867.0	830	12/13/2007	6 inch	LCS	679	799	1,188.0	-	-	Originally installed at 777 ft bgs; moved to 724 ft bgs on 6/25/2009. Pump removed 8/2017
MW-04	Groundwater	55-912575	1012613.0	675427.0	1,849.8	1,848.7	768	10/26/2010	6 inch	LCS	667.5	752.7	1,181.2	-	-	Pump removed 8/2017
MW-05	Groundwater	55-912728	1012467.6	674571.8	1,845.1	1,843.2	767	12/15/2010	6 inch	LCS	660	740.2	1,183.2	-	-	Pump removed 8/2017
MW-06	Groundwater	55-913112	1012139.1	675961.1	1,860.7	1,858.6	776.9	5/16/2011	6 inch	LCS	683	763	1,175.6	-	-	Pump removed 8/2017
MW-07	Groundwater	55-914001	1012607.3	675919.7	1,859.6	1,857.8	765	2/8/2012	8.25 inch	LCS	674.8	754.8	1,183.0	-	-	Pump removed 8/2017
MW-08	Groundwater	55-913859	1015700.0	676938.9	1,889.1	1,887.5	766.5	1/9/2012	8.25 inch	LCS	691.5	761.5	1,196.0	-	-	Pump removed 8/2017
MW-09	Groundwater	55-920632	1015090.4	675043.7	1,864.8	1,864.2	775	7/25/2017	6 inch	Sch 80 PVC	685	775	1,179.2	-	-	-
MW-09-S	Soil Vapor	55-920632	1015090.4	675043.7	1,864.8	1,864.2	160	7/25/2017	1 inch	Sch 80 PVC	140	160	1,724.2	-	-	-
MW-09-M	Soil Vapor	55-920632	1015090.4	675043.7	1,864.8	1,864.2	360	7/25/2017	1 inch	Sch 80 PVC	340	360	1,524.2	-	-	-
MW-09-D	Soil Vapor	55-920632	1015090.4	675043.7	1,864.8	1,864.2	585	7/25/2017	1 inch	Sch 80 PVC	535	585	1,329.2	-	-	-
MW-10	Groundwater	55-920633	1013594.3	674997.4	1,848.3	1,847.4	765	9/3/2017	6 inch	Sch 80 PVC	670	760	1,177.4	-	-	-
MW-10-S	Soil Vapor	55-920633	1013594.3	674997.4	1,848.3	1,847.4	140	9/6/2017	1 inch	Sch 80 PVC	120	140	1,727.4	-	-	-
MW-10-M	Soil Vapor	55-920633	1013594.3	674997.4	1,848.3	1,847.4	340	9/6/2017	1 inch	Sch 80 PVC	320	340	1,527.4	-	-	-
MW-10-D	Soil Vapor	55-920633	1013594.3	674997.4	1,848.3	1,847.4	570	9/6/2017	1 inch	Sch 80 PVC	520	570	1,327.4	-	-	-
PW	Groundwater	55-503913	1015806.0	675722.2	1,882.0	1,881.4	820	10/1/1982	6 inch	LCS	680	810	1,201.4	-	-	Originally installed at 750 ft bgs; moved to 729 ft bgs on 6/25/2009. Pump removed 8/2017
SVE-01	Soil Vapor Extraction	55-917896	1015834.8	675971.9	-	1,882.1	610	5/18/2015	6 inch	Sch 80 PVC	120	600	1,762.1	-	-	-

Table 1. Well Construction Summary

WellName	Location Type	ADWR ID	Northing (NAD83SP Int'l Ft)	Easting (NAD83SP Int'l Ft)	TOC (ft amsl)	Ground Surface (ft amsl)	Total Well Depth (ft)	Date Installed	Casing Diameter (I.D.)	CasingType	Top Screen Depth (ft bgs)	Bottom Screen Depth (ft bgs)	Top Screen Elevation (ft amsl)	Pump Intake Depth (ft bgs)	Pump Intake Elevation (ft amsl)	Comment
SVE-01-S	Soil Vapor	55-917896	1015834.8	675971.9	1,882.1	1,882.1	610	5/18/2015	1 inch	Sch 80 PVC	180	200	1,702.1	-	-	-
SVE-01-M	Soil Vapor	55-917896	1015834.8	675971.9	1,882.1	1,882.1	610	5/18/2015	1 inch	Sch 80 PVC	360	380	1,522.1	-	-	-
SVE-01-D	Soil Vapor	55-917896	1015834.8	675971.9	1,882.1	1,882.1	610	5/18/2015	1 inch	Sch 80 PVC	480	500	1,402.1	-	-	-
SVE-02	Soil Vapor Extraction	55-917897	1015472.6	675617.9	1,900.4	1,900.4	630	5/5/2015	6 inch	Sch 80 PVC	400	620	1,500.4	-	-	-
SVE-02-S	Soil Vapor	55-917897	1015472.6	675617.9	1,900.4	1,900.4	630	5/5/2015	1 inch	Sch 80 PVC	150	170	1,750.4	-	-	-
SVE-02-M	Soil Vapor	55-917897	1015472.6	675617.9	1,900.4	1,900.4	630	5/5/2015	1 inch	Sch 80 PVC	300	350	1,600.4	-	-	-
SVE-03	Soil Vapor	55-920634	1015112.6	675423.8	1,907.5	1,905.1	655	8/8/2017	6 inch	Sch 80 PVC	530	650	1,375.1	-	-	-
SVE-03-S	Soil Vapor	55-920634	1015112.6	675423.8	1,907.5	1,905.1	200	8/8/2017	1 inch	Sch 80 PVC	180	200	1,725.1	-	-	-
SVE-03-M	Soil Vapor	55-920634	1015112.6	675423.8	1,907.5	1,905.1	400	8/8/2017	1 inch	Sch 80 PVC	380	400	1,525.1	-	-	-
SVE-04	Soil Vapor	55-920878	1015934.6	676182.8	1,893.0	1,890.8	644	10/4/2017	6 inch	Sch 80 PVC	514	639	1,376.8	-	-	-
SVE-04-S	Soil Vapor	55-920878	1015934.6	676182.8	1,893.0	1,890.8	185	10/4/2017	1 inch	Sch 80 PVC	165	185	1,725.8	-	-	-
SVE-04-M	Soil Vapor	55-920878	1015934.6	676182.8	1,893.0	1,890.8	385	10/4/2017	1 inch	Sch 80 PVC	365	385	1,525.8	-	-	-
TSSV-01-S	Soil Vapor	55-911519	1015918.8	675991.0	1,881.0	1,881.0	610	1/22/2010	2 inch	Sch 80 PVC	150	200	1,731.0	-	-	-
TSSV-01-M	Soil Vapor	55-911519	1015918.8	675991.0	1,881.0	1,881.0	610	1/22/2010	2 inch	Sch 80 PVC	350	400	1,531.0	-	-	-
TSSV-01-D	Soil Vapor	55-911519	1015918.8	675991.0	1,881.0	1,881.0	610	1/22/2010	2 inch	Sch 80 PVC	549	599	1,332.0	-	-	-
TSSV-02-S	Soil Vapor	55-915432	1015688.3	675875.9	1,880.2	1,881.4	210	5/3/2013	2 inch	Sch 80 PVC	150.3	200.3	1,731.1	-	-	-
TSSV-02-M	Soil Vapor	55-915432	1015688.3	675875.9	1,880.2	1,881.4	410	5/3/2013	2 inch	Sch 80 PVC	350.3	400.3	1,531.1	-	-	-
TSSV-02-D	Soil Vapor	55-915279	1015688.8	675860.8	1,880.2	1,881.2	609	4/24/2013	2 inch	Sch 80 PVC	549.3	599.3	1,331.9	-	-	-
TSSV-02-PZ	Groundwater	55-915279	1015688.8	675860.8	1,880.2	1,881.2	779	4/24/2013	2 inch	Sch 80 PVC	699.3	769.3	1,181.9	-	-	-
TSSV-03-S	Soil Vapor	55-915281	1014061.5	675688.5	1,902.7	1,901.8	230	4/26/2013	2 inch	Sch 80 PVC	170.5	220.5	1,731.3	-	-	-
TSSV-03-M	Soil Vapor	55-915281	1014061.5	675688.5	1,902.7	1,901.8	430	4/26/2013	2 inch	Sch 80 PVC	370.5	420.5	1,531.3	-	-	-
TSSV-03-D	Soil Vapor	55-915281	1014061.5	675688.5	1,902.7	1,901.8	629	4/26/2013	2 inch	Sch 80 PVC	569.5	619.5	1,332.3	-	-	-
TSSV-03-PZ	Groundwater	55-915281	1014061.5	675688.5	1,902.7	1,901.8	799	4/26/2013	2 inch	Sch 80 PVC	719.5	789.5	1,182.3	-	-	-

Table 1. Well Construction Summary

WellName	Location Type	ADWR ID	Northing (NAD83SP Int'l Ft)	Easting (NAD83SP Int'l Ft)	TOC (ft amsl)	Ground Surface (ft amsl)	Total Well Depth (ft)	Date Installed	Casing Diameter (I.D.)	CasingType	Top Screen Depth (ft bgs)	Bottom Screen Depth (ft bgs)	Top Screen Elevation (ft amsl)	Pump Intake Depth (ft bgs)	Pump Intake Elevation (ft amsl)	Comment
TSSV-03-P	Soil Vapor	55-915281	1014061.5	675688.5	1,902.7	1,901.8	73	4/26/2013	1 inch	Sch 80 PVC	60	70	1,841.8	-	-	-
TSSV-04-S	Soil Vapor	55-915282	1015319.7	675423.9	1,906.0	1,905.4	235	5/31/2013	2 inch	Sch 80 PVC	174.5	224.5	1,730.9	-	-	-
TSSV-04-M	Soil Vapor	55-915282	1015319.7	675423.9	1,906.0	1,905.4	435	5/31/2013	2 inch	Sch 80 PVC	374.5	424.5	1,530.9	-	-	-
TSSV-04-D	Soil Vapor	55-915629	1015319.7	675423.9	1,906.0	1,905.0	635	6/10/2013	2 inch	Sch 80 PVC	575	625	1,330.0	-	-	-
TSSV-04-PZ	Groundwater	55-915282	1015319.7	675423.9	1,906.0	1,905.8	804	5/31/2013	3 inch	Sch 80 PVC	723.5	793.5	1,182.3	-	-	-
TSSV-05-S	Soil Vapor	55-917870	1014659.1	675396.6	1,905.7	1,904.7	430	3/8/2015	2 inch	Sch 80 PVC	170	220	1,734.7	-	-	-
TSSV-05-M	Soil Vapor	55-917870	1014659.1	675396.6	1,905.7	1,904.7	430	3/8/2015	2 inch	Sch 80 PVC	370	420	1,534.7	-	-	-
TSSV-05-D	Soil Vapor	55-917892	1014659.1	675396.6	1,905.7	1,905.1	805	4/21/2015	2 inch	Sch 80 PVC	570	620	1,335.1	-	-	-
TSSV-05-PZ	Groundwater	55-917892	1014659.1	675396.6	1,905.7	1,905.1	805	4/21/2015	4 inch	Sch 80 PVC	720	790	1,185.1	-	-	-
TSSV-06-S	Soil Vapor	55-917894	1015997.6	675654.5	1,876.9	1,876.5	610	3/18/2015	2 inch	Sch 80 PVC	150	200	1,726.5	-	-	-
TSSV-06-M	Soil Vapor	55-917894	1015997.6	675654.5	1,876.9	1,876.5	610	3/18/2015	2 inch	Sch 80 PVC	350	400	1,526.5	-	-	-
TSSV-06-D	Soil Vapor	55-917894	1015997.6	675654.5	1,876.9	1,876.5	610	3/18/2015	2 inch	Sch 80 PVC	550	600	1,326.5	-	-	-
TSSV-06-PZ	Groundwater	55-917895	1015997.6	675654.5	1,876.9	1,876.1	794	4/8/2015	4 inch	Sch 80 PVC	700	785	1,176.1	-	-	-
TSSV-07-S	Soil Vapor	55-917947	1015855.0	676202.1	1,889.9	1,889.5	620	3/30/2015	2 inch	Sch 80 PVC	160	210	1,729.5	-	-	-
TSSV-07-M	Soil Vapor	55-917947	1015855.0	676202.1	1,889.9	1,889.5	620	3/30/2015	2 inch	Sch 80 PVC	360	410	1,529.5	-	-	-
TSSV-07-D	Soil Vapor	55-917947	1015855.0	676202.1	1,889.9	1,889.5	620	3/30/2015	2 inch	Sch 80 PVC	560	610	1,329.5	-	-	-
TSSV-07-PZ	Groundwater	55-917946	1015855.0	676202.1	1,889.9	1,889.0	795	4/13/2015	4 inch	Sch 80 PVC	710	780	1,179.0	-	-	-

Notes: LFG - Landfill Gas
ft - Feet
ft bgs - Feet below ground surface
ft amsl - Feet above mean sea level
I.D. - Inner Diameter
Pumps removed for wells MW-02 - MW-08 and PW 8/2017.

Table 2. Groundwater Elevation, Gradient, and Flow Direction

Cave Creek Landfill, Maricopa County

Groundwater Elevation by Well (ft amsl)

Sample Date	Third Quarter 2017 (Aug. 7, 2017)	Fourth Quarter 2017 (Nov. 15 to Nov. 16, 2017)	First Quarter 2018 (Feb. 13 to Feb. 16, 2018)	Second Quarter 2018 (May 7 to May 10, 2018)
EW-01	NM	1156.80	1156.53	1156.65
PW	NM	1163.08	1162.96	1162.96
MW-02	1156.12	1156.90	1156.62	1156.78
MW-03	1157.01	1157.66	1157.50	1157.50
MW-04	1155.84	1156.53	1156.23	1156.30
MW-05	1155.25	1156.09	1155.78	1155.98
MW-06	1154.52	1155.22	1154.98	1155.21
MW-07	1155.75	1156.43	1156.18	1156.31
MW-08	1162.32	1162.58	1162.59	1162.58
MW-09	NM	1161.66	1161.44	1161.62
MW-10	NM	1158.62	1158.34	1158.47
TSSV-02-PZ	NM	1162.90	1162.69	1162.69
TSSV-03-PZ	1158.55	1159.16	1158.04	1158.04
TSSV-04-PZ*	1159.55	1160.92	1160.84	1160.86
TSSV-05-PZ	1160.04	1160.62	1160.51	1160.54
TSSV-06-PZ	1162.28	1162.81	1162.52	1162.73
TSSV-07-PZ	1161.80	1162.55	1162.49	1162.62
Gradient (ft/ft)	0.002	0.002	0.002	0.002
Flow Direction (deg. from N)	181.6	175.3	177.8	176.2

Notes:
Flow direction measured in a clockwise rotation; North is 0 degrees, East is 90 degrees, South is 180 degrees, and West is 270 degrees.
deg. = degrees
ft amsl = Feet above mean sea level
PW = Production Well
MW = Monitoring Well
NM = Not Measured
TSSV = Monitoring Well
PZ = Piezometer
* = Inconsistent measurement (not used in gradient or flow direction calculations)

Table 3. Groundwater Analytical Results - Summary of VOC Data

Cave Creek Landfill, Maricopa County

Well Name	Sample Date	Sample Elevation (ft amsl)	Units	Sample Method	1,1-Dichloroethane	1,1-Dichloroethene	Benzene	Bromoform	Carbon disulfide	Chlorobenzene	Chloroform	cis-1,2-Dichloroethene	Naphthalene	Tetrachloroethene	Toluene	trans-1,2-dichloroethene	Trichloroethene	Vinyl Chloride	Comments
EW-01																			
	5/7/2018	1,142.5	µg/L	PDB	<0.5	<0.5	<0.5	<1	<0.5	<0.5	<0.5	<0.5	<5	<0.5	<2	<0.5	3.3	<0.5	- -
MW-02																			
	5/7/2018	1,142.0	µg/L	PDB	1.4	<0.5	<0.5	<1	<0.5	<0.5	<0.5	2.3	<5	1.8	<2	<0.5	87	<0.5	- -
MW-03																			
	5/8/2018	1,143.4	µg/L	PDB	<0.5	<0.5	<0.5	<1	<0.5	<0.5	<0.5	<0.5	<5	<0.5	<2	<0.5	1.0	<0.5	- -
MW-04																			
	6/21/2018	1,141.8	µg/L	PDB	<0.5	<0.5	<0.5	<1	<0.5	<0.5	<0.5	<0.5	<5	0.88	<2	<0.5	4.2	<0.5	- -
MW-05																			
	5/9/2018	1,141.1	µg/L	PDB	<0.5	<0.5	<0.5	<1	<0.5	<0.5	<0.5	<0.5	<5	<0.5	<2	<0.5	31	<0.5	- -
MW-06																			
	5/8/2018	1,140.7	µg/L	PDB	<0.5	<0.5	<0.5	<1	<0.5	<0.5	<0.5	<0.5	<5	<0.5	<2	<0.5	0.43	<0.5	- -
MW-07																			
	5/8/2018	1,141.6	µg/L	PDB	<2.5	<2.5	<2.5	<5	<2.5	<2.5	<2.5	<2.5	<25	<2.5	<10	<2.5	31	<2.5	- -
MW-08																			
	5/7/2018	1,148.1	µg/L	PDB	<5	<5	<5	<10	<5	<5	<5	<5	<50	<5	<20	<5	150	<5	- -
	5/7/2018	1,148.1	µg/L	PDB	<2.5	<2.5	<2.5	<5	<2.5	<2.5	<2.5	<2.5	<25	<2.5	<10	<2.5	150	<2.5	Duplicate
MW-09																			
	5/9/2018	1,146.8	µg/L	PDB	<0.5	<0.5	<0.5	<1	<0.5	<0.5	<0.5	<0.5	<5	<0.5	<2	<0.5	17	<0.5	- -
MW-10																			
	5/9/2018	1,144.3	µg/L	PDB	<0.5	<0.5	<0.5	<1	<0.5	<0.5	0.71	17	<5	7.3	<2	<0.5	300	<0.5	- -
PW																			
	5/10/2018	1,148.0	µg/L	PDB	<0.5	<0.5	<0.5	<1	<0.5	<0.5	<0.5	<0.5	<5	<0.5	<2	<0.5	17	<0.5	- -
TSSV-02-PZ																			
	5/9/2018	1,148.2	µg/L	PDB	<0.5	<0.5	<0.5	<1	<0.5	<0.5	<0.5	<0.5	<5	<0.5	<2	<0.5	<0.5	<0.5	- -
TSSV-03-PZ																			
	5/9/2018	1,144.7	µg/L	PDB	0.83	<0.5	<0.5	<1	<0.5	<0.5	<0.5	11	<5	5.5	<2	<0.5	400	<0.5	Duplicate
	5/9/2018	1,144.7	µg/L	PDB	0.90	<0.5	<0.5	<1	<0.5	<0.5	<0.5	11	<5	5.2	<2	<0.5	440	<0.5	- -
TSSV-04-PZ																			
	5/8/2018	1,146.0	µg/L	PDB	<2.5	<2.5	<2.5	<5	<2.5	<2.5	<2.5	<2.5	<25	<2.5	<10	<2.5	55	<2.5	- -
TSSV-05-PZ																			
	5/9/2018	1,145.7	µg/L	PDB	<0.5	<0.5	<0.5	<1	<0.5	<0.5	<0.5	<0.5	<5	<0.5	<2	<0.5	4.0	<0.5	- -
AWQS:					**N/A**	**7**	**5**	**80**	**N/A**	**100**	**80**	**70**	**N/A**	**5**	**1,000**	**100**	**5**	**2**	

Table 3. Groundwater Analytical Results - Summary of VOC Data

Well Name	Sample Date	Sample Elevation (ft amsl)	Units	Sample Method	1,1-Dichloroethane	1,1-Dichloroethene	Benzene	Bromoform	Carbon disulfide	Chlorobenzene	Chloroform	cis-1,2-Dichloroethene	Naphthalene	Tetrachloroethene	Toluene	trans-1,2-dichloroethene	Trichloroethene	Vinyl Chloride	Comments
TSSV-06-PZ																			
	5/7/2018	1,147.9	µg/L	PDB	<5	<5	<5	<10	<5	<5	<5	<5	<50	<5	<20	<5	5.2	<5	- -
TSSV-07-PZ																			
	5/8/2018	1,147.9	µg/L	PDB	<0.5	<0.5	<0.5	<1	<0.5	<0.5	<0.5	<0.5	<5	<0.5	<2	<0.5	<0.5	<0.5	- -
AWQS:					**N/A**	**7**	**5**	**80**	**N/A**	**100**	**80**	**70**	**N/A**	**5**	**1,000**	**100**	**5**	**2**	

Notes: AWQS - Aquifer Water Quality Standard
Grey text indicates result was less than the reporting limit
Red text indicates a result detected above the AWQS
µg/L - micrograms per liter
ft amsl - feet above mean sea level
btw - below water table
PDB - Passive Diffusion Bag
VOC - Volatile Organic Compound
Analytical method is VOCs by SW 8260B unless otherwise noted.
- = data not applicable or not available
* = approximate sample location

Table 4. Soil Vapor Analytical Results - Wellhead TO-15 Analysis Data

Cave Creek Landfill, Maricopa County

Well Name	Sample Date	Sample Elevation (ft amsl)	Units	Acetone	2-Butanone (MEK)	Chlorobenzene	Chloroform	1,1-Dichloroethane	1,2-Dichloroethane	1,1-Dichloroethene	cis-1,2-Dichloroethene	trans-1,2-Dichloroethene	Freon 11	Freon 12	Freon 113	Methylene chloride	Tetrachloroethene	Tetrahydrofuran	Trichloroethene	Vinyl Chloride	Comments
MW-09																					
	6/8/2018	1,179.2	µg/m³	<11,900	<14,800	<2,300	<2,440	<2,030	<2,030	12,000	5,110	<1,980	<2,810	<4,950	45,600	<6,940	26,200	<5,900	1,010,000	<1,280	--
MW-09-S																					
	6/8/2018	1,724.2	µg/m³	<11,900	<14,800	<2,300	<2,440	<2,030	<2,030	<1,990	<1,980	<1,980	<2,810	<4,950	<3,830	<6,940	36,100	<5,900	6,180	<1,280	--
MW-09-M																					
	6/8/2018	1,524.2	µg/m³	<2,380	<2,950	<460	<488	413	<405	<397	<396	<396	2,530	3,030	13,500	<1,390	6,440	<1,180	3,050	<256	--
MW-09-D																					
	6/8/2018	1,329.2	µg/m³	<2,380	<2,950	<460	<488	<405	<405	<397	<396	<396	<562	<990	21,500	<1,390	2,180	<1,180	19,500	<256	--
MW-10																					
	6/6/2018	1,177.4	µg/m³	<2,380	<2,950	<460	<488	5,670	<405	2,050	<396	<396	14,900	22,700	3,370	<1,390	3,270	<1,180	10,900	<256	--
MW-10-S																					
	6/6/2018	1,727.4	µg/m³	<2,380	<2,950	<460	<488	<405	<405	<397	<396	<396	8,090	28,500	2,500	<1,390	3,170	<1,180	580	<256	--
MW-10-M																					
	6/6/2018	1,527.4	µg/m³	<2,380	<2,950	<460	<488	2,800	<405	1,560	491	<396	10,100	35,900	2,510	2,220	5,440	<1,180	1,050	<256	--
MW-10-D																					
	6/6/2018	1,327.4	µg/m³	<2,380	<2,950	<460	<488	7,450	<405	1,560	<396	<396	13,000	31,100	2,410	<1,390	7,590	<1,180	4,510	<256	--
PW																					
	6/20/2018	1,201.4	µg/m³	<1,190	<1,480	<230	<244	<203	<203	<199	246	<198	<281	<495	620	<694	881	<590	13,200	<128	--
SVE-01																					
	6/20/2018	1,762.1	µg/m³	<1,190	<1,480	8,370	307	<203	<203	508	1,400	<198	<281	<495	1,290	<694	2,810	<590	19,300	<128	--
SVE-01-S																					
	6/18/2018	1,702.1	µg/m³	<1,190	<1,480	800	<244	<203	<203	<199	<198	<198	<281	<495	<383	<694	1,400	<590	8,060	<128	--
SVE-01-M																					
	6/18/2018	1,522.1	µg/m³	<1,190	<1,480	695	<244	<203	<203	<199	<198	<198	<281	<495	<383	<694	922	<590	6,500	<128	--
SVE-01-D																					
	6/18/2018	1,402.1	µg/m³	<1,190	<1,480	883	<244	<203	<203	206	301	<198	<281	<495	758	<694	895	<590	9,880	<128	--
SVE-02																					
	6/20/2018	1,500.4	µg/m³	<5,950	<7,380	<1,150	<1,220	<1,010	<1,010	<993	1,430	<990	<1,410	<2,480	11,600	<3,470	<3,390	<2,950	31,000	<640	--

Table 4. Soil Vapor Analytical Results - Wellhead TO-15 Analysis Data

Cave Creek Landfill, Maricopa County

Well Name	Sample Date	Sample Elevation (ft amsl)	Units	Acetone	2-Butanone (MEK)	Chlorobenzene	Chloroform	1,1-Dichloroethane	1,2-Dichloroethane	1,1-Dichloroethene	cis-1,2-Dichloroethene	trans-1,2-Dichloroethene	Freon 11	Freon 12	Freon 113	Methylene chloride	Tetrachloroethene	Tetrahydrofuran	Trichloroethene	Vinyl Chloride	Comments
SVE-02-S																					
	6/20/2018	1,750.4	µg/m³	<238	<295	<46.0	<48.8	<40.5	<40.5	<39.7	1,430	<39.6	120	234	<76.6	<139	353	<118	829	327	--
SVE-02-M																					
	6/20/2018	1,600.4	µg/m³	<238	<295	<46.0	134	<40.5	<40.5	<39.7	91.9	<39.6	182	304	464	<139	1,250	<118	1,400	27.6	--
SVE-03																					
	6/20/2018	1,375.1	µg/m³	<11,900	<14,800	<2,300	<2,440	<2,030	<2,030	2,860	3,170	<1,980	<2,810	<4,950	14,100	<6,940	<6,780	<5,900	94,500	<1,280	--
SVE-03-S																					
	6/20/2018	1,725.1	µg/m³	<119	<148	<23.0	<24.4	<20.3	<20.3	<19.9	28.9	<19.8	77.6	113	95.8	<69.4	600	<59.0	331	<12.8	--
SVE-03-M																					
	6/20/2018	1,525.1	µg/m³	<238	<295	<46.0	<48.8	<40.5	<40.5	39.7	<39.6	<39.6	723	695	458	451	1,380	<118	1,730	<25.6	--
SVE-04																					
	6/20/2018	1,376.8	µg/m³	<59,500	<73,800	<11,500	<12,200	<10,100	<10,100	253,000	49,900	<9,900	<14,100	<24,800	196,000	229,000	97,600	<29,500	471,000	<6,400	--
	6/20/2018	1,376.8	µg/m³	<59,500	<73,800	<11,500	<12,200	<10,100	<10,100	187,000	37,600	<9,900	<14,100	<24,800	151,000	167,000	82,700	<29,500	373,000	<6,400	Duplicate
SVE-04-S																					
	6/20/2018	1,725.8	µg/m³	<238	<295	774	<48.8	<40.5	<40.5	<39.7	300	<39.6	439	247	116	<139	302	<118	956	<25.6	--
SVE-04-M																					
	6/20/2018	1,525.8	µg/m³	1,880	<295	2,160	<48.8	<40.5	<40.5	545	367	<39.6	229	122	<76.6	169	354	<118	1,270	89.6	--
TSSV-01-S																					
	6/15/2018	1,731.0	µg/m³	<2,380	<2,950	<460	<488	<405	<405	<397	586	<396	<562	<990	<766	<1,390	1,600	<1,180	20,100	<256	--
TSSV-01-M																					
	6/15/2018	1,531.0	µg/m³	<2,380	<2,950	11,900	1,230	<405	<405	1,300	855	<396	<562	<990	1,060	<1,390	6,510	11,900	41,700	<256	--
TSSV-01-D																					
	6/15/2018	1,332.0	µg/m³	<23,800	<29,500	<4,600	<4,880	<4,050	<4,050	7,860	22,300	<3,960	<5,620	<9,900	166,000	15,600	13,700	<11,800	346,000	<2,560	--
TSSV-02-S																					
	6/15/2018	1,731.2	µg/m³	<2,380	<2,950	<460	<488	<405	<405	<397	<396	<396	<562	<990	<766	<1,390	1,790	3,740	14,800	<256	--
TSSV-02-M																					
	6/15/2018	1,531.2	µg/m³	<238	<295	<46.0	<48.8	<40.5	<40.5	166	<39.6	<39.6	<56.2	<99.0	453	<139	194	1,080	10,500	<25.6	--

Table 4. Soil Vapor Analytical Results - Wellhead TO-15 Analysis Data

Cave Creek Landfill, Maricopa County

Well Name	Sample Date	Sample Elevation (ft amsl)	Units	Acetone	2-Butanone (MEK)	Chlorobenzene	Chloroform	1,1-Dichloroethane	1,2-Dichloroethane	1,1-Dichloroethene	cis-1,2-Dichloroethene	trans-1,2-Dichloroethene	Freon 11	Freon 12	Freon 113	Methylene chloride	Tetrachloroethene	Tetrahydrofuran	Trichloroethene	Vinyl Chloride	Comments
TSSV-02-D																					
	6/15/2018	1,331.9	µg/m³	<5,950	<7,380	1,610	<1,220	<1,010	<1,010	<993	5,110	<990	<1,410	<2,480	4,830	<3,470	<3,390	<2,950	64,400	<640	- -
TSSV-02-PZ																					
	6/15/2018	1,181.9	µg/m³	<238	<295	<46.0	<48.8	<40.5	<40.5	181	863	<39.6	<56.2	<99.0	<76.6	<139	1,910	<118	2,300	<25.6	- -
TSSV-03-D																					
	6/11/2018	1,332.3	µg/m³	<238	<295	<46.0	<48.8	86.7	<40.5	<39.7	<39.6	<39.6	94.4	325	98.0	<139	302	<118	670	<25.6	- -
TSSV-03-PZ																					
	6/11/2018	1,182.3	µg/m³	<2,380	<2,950	<460	<488	875	<405	<397	<396	<396	8,660	14,300	4,210	<1,390	3,380	<1,180	21,800	<256	- -
TSSV-04-M																					
	6/15/2018	1,530.9	µg/m³	<119	<148	104	<24.4	<20.3	<20.3	<19.9	68.9	<19.8	41.0	<49.5	101	<69.4	908	<59.0	1,630	<12.8	- -
TSSV-04-D																					
	6/18/2018	1,330.0	µg/m³	<238	<295	<46.0	<48.8	<40.5	<40.5	<39.7	73.7	<39.6	<56.2	<99.0	121	<139	290	<118	2,440	<25.6	- -
	6/18/2018	1,330.0	µg/m³	<238	<295	<46.0	<48.8	<40.5	<40.5	<39.7	74.4	<39.6	<56.2	<99.0	121	<139	287	<118	2,580	<25.6	Duplicate
TSSV-04-PZ																					
	6/15/2018	1,182.2	µg/m³	<238	<295	<46.0	<48.8	<40.5	<40.5	170	301	<39.6	<56.2	<99.0	849	<139	312	<118	2,140	<25.6	- -
	6/15/2018	1,182.2	µg/m³	<238	<295	<46.0	<48.8	<40.5	<40.5	176	315	<39.6	<56.2	<99.0	878	<139	336	<118	2,250	<25.6	Duplicate
TSSV-05-D																					
	6/11/2018	1,335.1	µg/m³	<1,190	<1,480	<230	<244	664	<203	<199	<198	<198	7,810	15,400	1,940	<694	2,950	<590	1,430	<128	- -
TSSV-05-PZ																					
	6/11/2018	1,185.1	µg/m³	<59,500	<73,800	<11,500	<12,200	<10,100	<10,100	<9,930	<9,900	<9,900	<14,100	<24,800	<19,200	<34,700	<33,900	<29,500	313,000	<6,400	- -
TSSV-06-S																					
	6/13/2018	1,726.5	µg/m³	<238	<295	<46.0	<48.8	<40.5	<40.5	<39.7	<39.6	<39.6	<56.2	<99.0	110	<139	<136	<118	1,010	<25.6	- -
TSSV-06-M																					
	6/13/2018	1,526.5	µg/m³	<1,190	<1,480	<230	<244	<203	<203	<199	206	<198	<281	<495	<383	<694	<678	<590	7,140	<128	- -
TSSV-06-D																					
	6/13/2018	1,326.5	µg/m³	<1,190	<1,480	<230	<244	<203	<203	<199	380	<198	<281	<495	820	<694	685	<590	8,160	<128	- -
TSSV-07-S																					
	6/13/2018	1,729.5	µg/m³	<238	<295	<46.0	<48.8	<40.5	<40.5	61.1	<39.6	<39.6	281	<99.0	87.3	<139	160	<118	1,030	<25.6	- -

Table 4. Soil Vapor Analytical Results - Wellhead TO-15 Analysis Data

Cave Creek Landfill, Maricopa County

Well Name	Sample Date	Sample Elevation (ft amsl)	Units	Acetone	2-Butanone (MEK)	Chlorobenzene	Chloroform	1,1-Dichloroethane	1,2-Dichloroethane	1,1-Dichloroethene	cis-1,2-Dichloroethene	trans-1,2-Dichloroethene	Freon 11	Freon 12	Freon 113	Methylene chloride	Tetrachloroethene	Tetrahydrofuran	Trichloroethene	Vinyl Chloride	Comments
TSSV-07-M																					
	6/13/2018	1,529.5	µg/m³	<1,190	<1,480	294	<244	<203	<203	8,810	210	<198	<281	614	1,110	756	2,200	<590	11,700	<128	- -
TSSV-07-D																					
	6/13/2018	1,329.5	µg/m³	<5,950	<7,380	<1,150	<1,220	<1,010	<1,010	5,840	<990	<990	<1,410	<2,480	2,910	<3,470	<3,390	<2,950	17,300	<640	- -
TSSV-07-PZ																					
	6/13/2018	1,179.0	µg/m³	<5,950	<7,380	<1,150	<1,220	<1,010	<1,010	3,380	2,670	<990	<1,410	<2,480	5,820	<3,470	6,440	<2,950	26,600	<640	- -
	6/13/2018	1,179.0	µg/m³	<5,950	<7,380	<1,150	<1,220	<1,010	<1,010	3,450	2,850	<990	<1,410	<2,480	5,750	<3,470	4,030	<2,950	23,700	<640	Duplicate

Notes: Grey text indicates a non-detected compound
µg/m³ - micrograms per cubic meter
ft amsl - feet above mean sea level
- = data not applicable or not available

Table 5. Soil Vapor Analytical Results - Process Sample TO-15 Analysis Data

Cave Creek Landfill, Maricopa County

Sample Location Identifier	Sample Date	Sample Elevation (ft amsl)	Units	Acetone	2-Butanone (MEK)	Chloroform	Chlorobenzene	1,1-Dichloroethane	1,2-Dichloroethane	1,1-Dichloroethene	cis-1,2-Dichloroethene	trans-1,2-Dichloroethene	Freon 11	Freon 12	Freon 113	Methylene chloride	Tetrachloroethene	Tetrahydrofuran	Trichloroethene	Vinyl Chloride	Comment
SP-01																					
	4/23/2018	-	µg/m³	<59,500	<73,800	<12,200	<11,500	<10,100	<10,100	210,000	32,300	<9,900	<14,100	<24,800	161,000	185,000	70,500	<29,500	418,000	<6,400	- -
	5/23/2018	-	µg/m³	<59,500	<73,800	<12,200	<11,500	<10,100	<10,100	189,000	23,000	<9,900	<14,100	<24,800	143,000	195,000	39,300	<29,500	324,000	<6,400	- -
	6/20/2018	-	µg/m³	<23,800	<29,500	<4,880	<4,600	<4,050	<4,050	106,000	21,100	<3,960	<5,620	<9,900	108,000	88,800	59,900	<11,800	271,000	<2,560	- -
SP-02																					
	4/23/2018	-	µg/m³	<23,800	<29,500	<4,880	<4,600	<4,050	<4,050	<3,970	<3,960	<3,960	<5,620	<9,900	<7,660	190,000	<13,600	<11,800	<5,370	<2,560	- -
	5/23/2018	-	µg/m³	<11,900	<14,800	<2,440	<2,300	<2,030	<2,030	<1,990	<1,980	<1,980	<2,810	13,100	<3,830	357,000	<6,780	<5,900	<2,690	4,100	- -
	6/20/2018	-	µg/m³	<4,760	<5,900	<976	<920	<810	<810	<794	<792	<792	<1,120	5,200	<1,530	152,000	27,900	<2,360	<1,070	1,090	- -
SP-03																					
	4/23/2018	-	µg/m³	<23,800	<29,500	<4,880	<4,600	<4,050	<4,050	<3,970	<3,960	<3,960	<5,620	<9,900	<7,660	200,000	<13,600	<11,800	<5,370	3,230	- -
	5/23/2018	-	µg/m³	<11,900	<14,800	<2,440	<2,300	<2,030	<2,030	<1,990	<1,980	<1,980	<2,810	11,000	<3,830	103,000	<6,780	<5,900	<2,690	3,560	- -
	6/20/2018	-	µg/m³	<23.8	<29.5	<4.88	<4.60	<4.05	<4.05	4.13	<3.96	<3.96	<5.62	623	<7.66	16.4	<13.6	<11.8	<5.37	61.2	- -
SP-04																					
	4/23/2018	-	µg/m³	<23,800	<29,500	<4,880	<4,600	<4,050	<4,050	<3,970	<3,960	<3,960	<5,620	<9,900	<7,660	233,000	<13,600	<11,800	<5,370	<2,560	- -
	5/23/2018	-	µg/m³	<11,900	<14,800	<2,440	<2,300	<2,030	<2,030	<1,990	<1,980	<1,980	<2,810	17,400	<3,830	256,000	<6,780	<5,900	<2,690	<1,280	- -
	6/20/2018	-	µg/m³	<238	<295	<48.8	<46.0	<40.5	<40.5	<39.7	<39.6	<39.6	<56.2	641	<76.6	<139	2,220	<118	<53.7	<25.6	- -

Notes: Grey text indicates a non-detected compound
µg/m³ - micrograms per cubic meter
ft amsl - feet above mean sea level
- = data not applicable or not available

Table 6. Soil Vapor Extraction Mass Removal

Cave Creek Landfill, Maricopa County

Date of Reading [DD-Mon-YR]	Blower Hour Meter Reading [hrs]	Time Operated Since Last Reading [hrs]	System Uptime [%]	VOC Concentration in Extracted Soil Vapor [mg/m^3]	SVE Flow Rate [scfm]	Hourly Rate of VOC Mass Extracted [lbs/hr]	VOC Mass Removed Since Last Reading [lbs]	Total VOC Mass Extracted Since Startup [lbs]
17-Jan-18	15,758	273	41	460	944	1.63	358	25,413
23-Feb-18	16,385	627	71	417	932	1.46	1,019	26,432
19-Mar-18	16,908	524	91	503	933	1.76	762	27,194
23-Apr-18	17,481	573	68	628	918	2.16	1,006	28,200
23-May-18	18,124	642	89	535	889	1.78	1,387	29,588
20-Jun-18	18,353	229	34	398	910	1.36	408	29,996

Notes:

Startup of the full-scale SVE system occurred on September 15, 2015. Mass totals presented in this table reflect full-scale SVE operations only.

Acronyms and Abbreviations:

DD - day of the month
hrs - hours
lbs - pounds
lbs/hr - pounds per hour
mg/m^3 - milligrams per cubic meter
Mon - month
scfm - standard cubic feet per minute
YR - year
VOC - Volatile Organic Compound per Maricopa County Air Quality Department Rule 100 Section 200.113

FIGURES

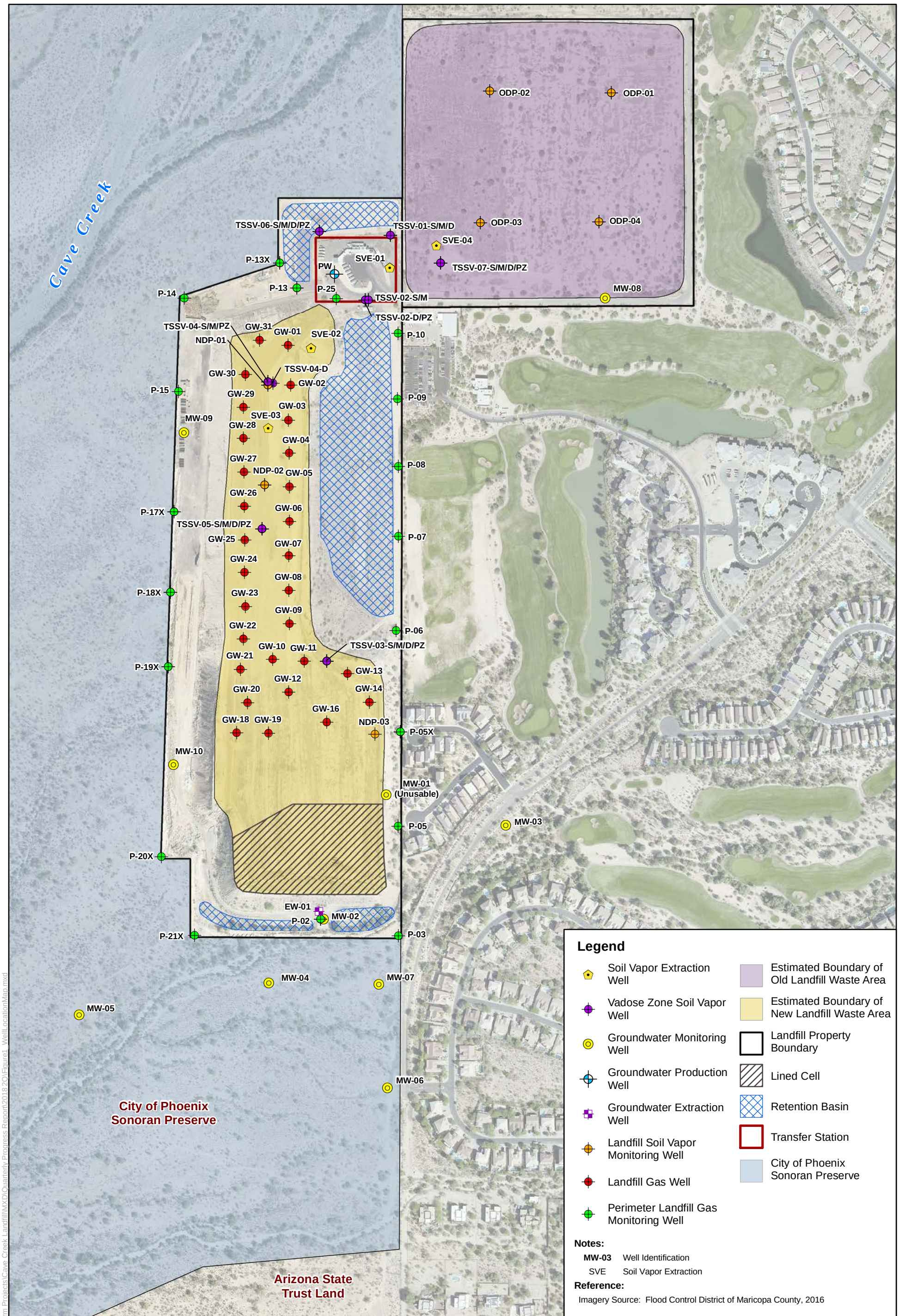

0 200 400 800 Feet

Job No.	1420172034
PM:	NC
Date:	8/27/2018
Scale:	1" = 400'

N

The map shown here has been created with all due and reasonable care and is strictly for use with Wood Environment & Infrastructure Solutions, Inc. Project Number 1420172034. This map has not been certified by a licensed land surveyor, and any third party use of this map comes without warranties of any kind. Wood Environment & Infrastructure Solutions, Inc. assumes no liability, direct or indirect, whatsoever for any such third party or unintended use.

2018 2nd Quarter Progress Report
Maricopa County Cave Creek Landfill
Phoenix, Arizona

Well Map

FIGURE
1

wood.

Path: X:\Projects\20-Longterm Projects\Cave Creek Landfill\MXD\Quarterly Progress Report\2018 2Q\Figure1_WellLocationMap.mxd

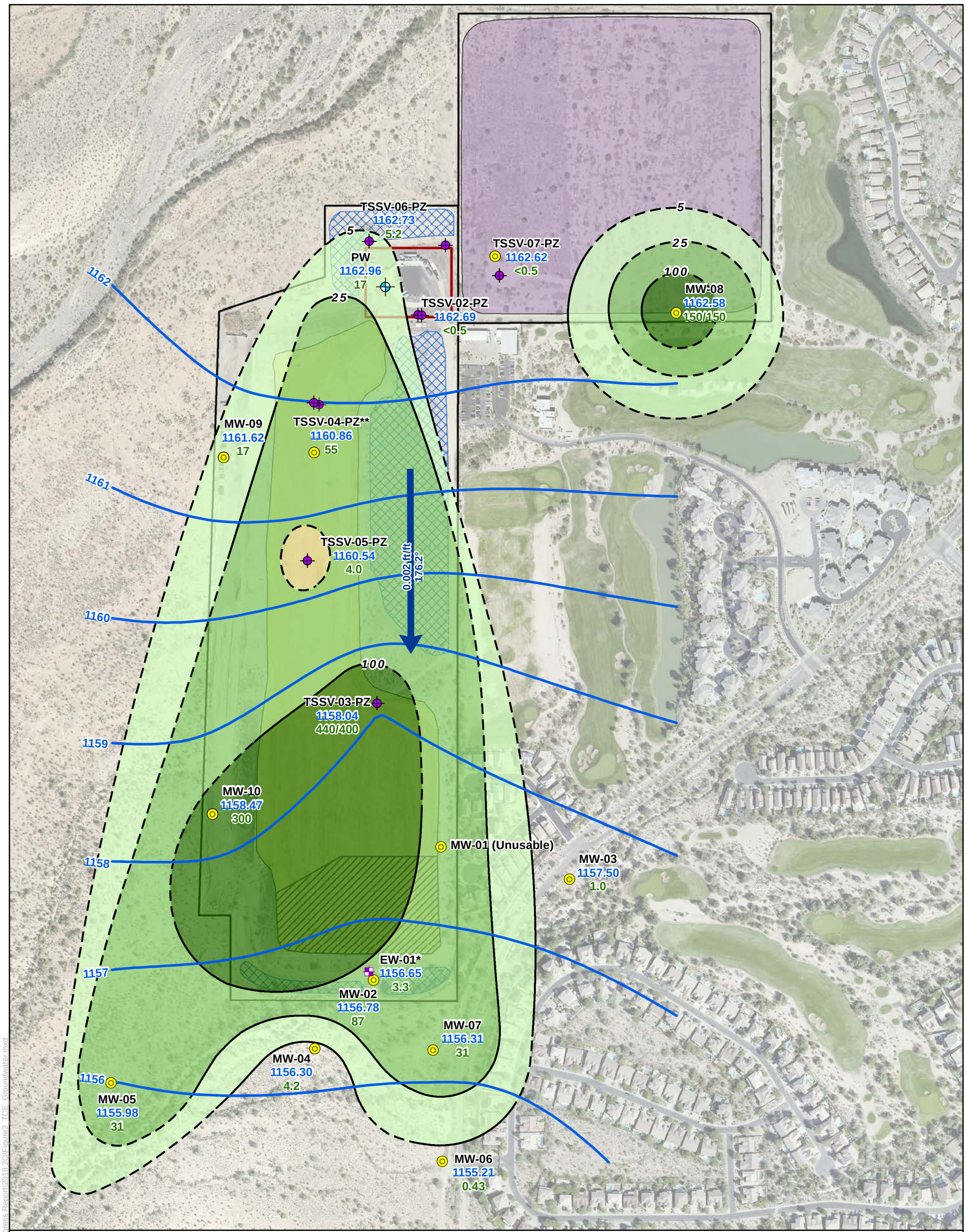

Legend

TCE Concentrations (µg/L) in Groundwater
(Dashed Where Inferred)

- 5-25
- 25-100
- 100-500
- Nested Vapor Well / Piezometer
- Production Well
- Groundwater Monitoring Well
- Groundwater Extraction Well
- Groundwater Elevation Contour (ft amsl) based upon May 2018 Data
- Groundwater Flow Direction (degrees) Groundwater Flow Gradient (ft/ft)
- Estimated Boundary of Old Landfill Waste Area
- Estimated Boundary of New Landfill Waste Area
- Landfill Property Boundaries
- Lined Cell
- Retention Basin
- Transfer Station

Notes:

MW-06	Well Identification
1155.21	Groundwater Elevation (ft amsl) collected in May 2018
0.43	TCE Concentration (µg/L) collected in May 2018
440/400	Original/Duplicate Results
*	EW-01 has a different screen interval and concentrations in this well are not comparable to the others on this figure.
**	Not used to generate water level elevation contours or gradient
µg/L	microgram per liter
ft amsl	feet above mean sea level
TCE	Trichloroethylene

Reference:
Imagery Source: Flood Control District of Maricopa County, 2016

0 200 400 800 Feet

Job No.	1420172034
PM:	NC
Date:	9/5/2018
Scale:	1" = 400'

N

The map shown here has been created with all due and reasonable care and is strictly for use with Wood Environment & Infrastructure Solutions Inc. Project Number 1420172034. This map has not been certified by a licensed land surveyor, and any third party use of this map comes without warranties of any kind. Wood Environment & Infrastructure Solutions Inc. assumes no liability, direct or indirect, whatsoever for any such third party or unintended use.

2018 2nd Quarter Progress Report
Maricopa County Cave Creek Landfill
Phoenix, Arizona

Estimated Extent of TCE Plume in Groundwater May 2018

FIGURE **2**

wood.

Path: X:\Projects\20-Longterm Projects\Cave Creek Landfill\MXD\Quarterly Progress Report\2018 2Q\Figure2_TCE_Groundwater.mxd

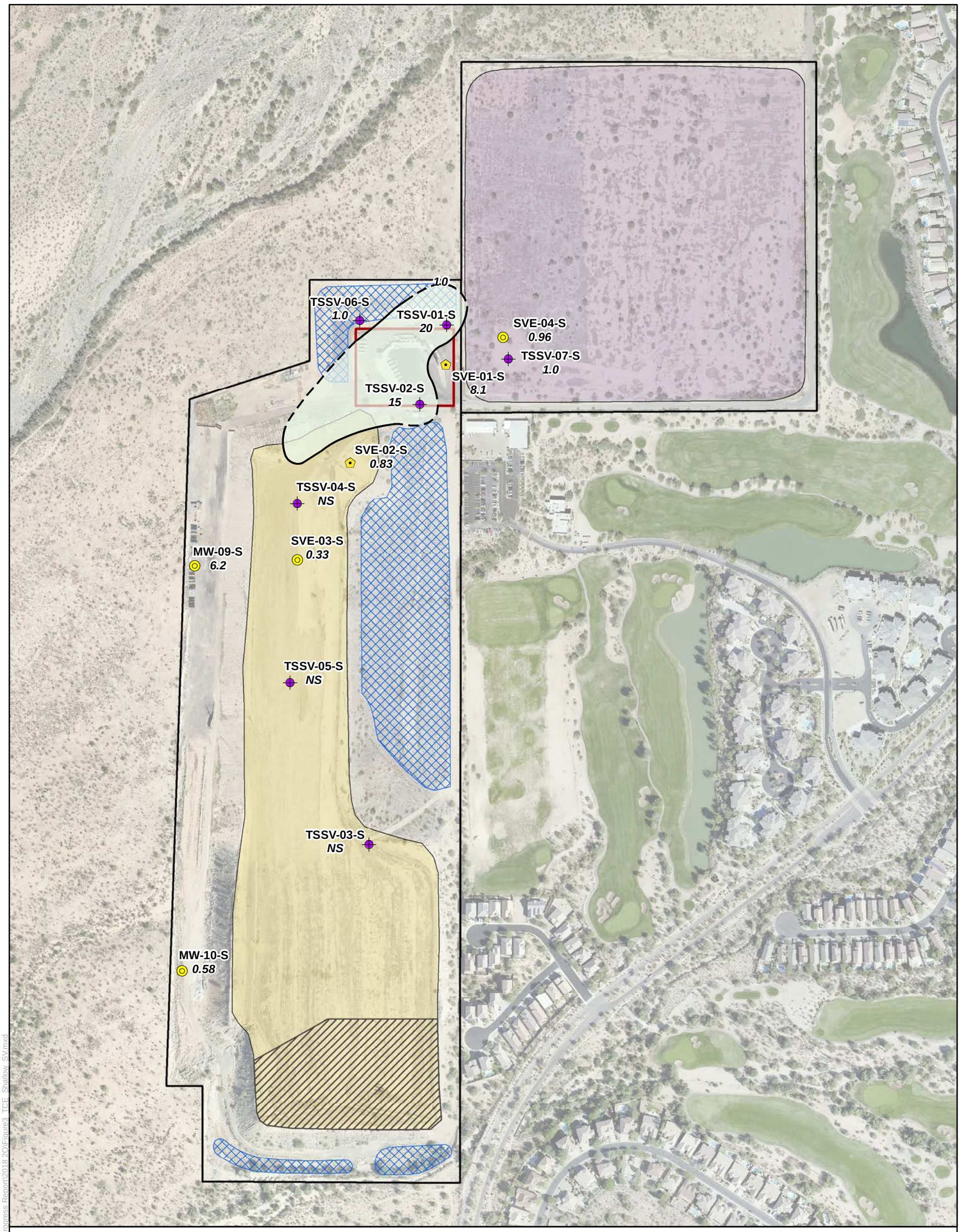

Legend

TCE Concentrations (mg/m³) in Soil Vapor

(Dashed Where Inferred)

10-100

- Monitoring Well
- Soil Vapor Extraction Well
- Vadose Zone Soil Vapor Well
- Estimated Boundary of Old Landfill Waste Area
- Estimated Boundary of New Landfill Waste Area
- Landfill Property Boundaries
- Lined Cell
- Retention Basin
- Transfer Station

Notes:

TSSV-02-S	Well Identification
15	TCE soil gas result (mg/m³) collected June 2018
ft amsl	Feet above mean sea level
mg/m³	Milligram per cubic meter
NS	Not Sampled
TCE	Trichloroethylene

Range of Vapor Well Screen Intervals: 1677 - 1736 ft amsl

Reference:

Imagery Source: Flood Control District of Maricopa County, 2016

0 175 350 525 700 Feet

Job No.:	1420172034
PM:	NC
Date:	9/4/2018
Scale:	1" = 350'

N

The map shown here has been created with all due and reasonable care and is strictly for use with Wood Environment & Infrastructure Solutions, Inc. Project Number 1420172034. This map has not been certified by a licensed land surveyor, and any third party use of this map comes without warranties of any kind. Wood Environment & Infrastructure Solutions, Inc. assumes no liability, direct or indirect, whatsoever for any such third party or unintended use.

2018 2nd Quarter Progress Report
Maricopa County Cave Creek Landfill
Phoenix, Arizona

Shallow Zone TCE Soil Vapor Concentrations
June 2018

FIGURE
3

wood.

Path: X:\Projects\20-Longterm Projects\Cave Creek Landfill\MXD\Quarterly Progress Report\2018 2Q\Figure3_TCE_Shallow_SV.mxd

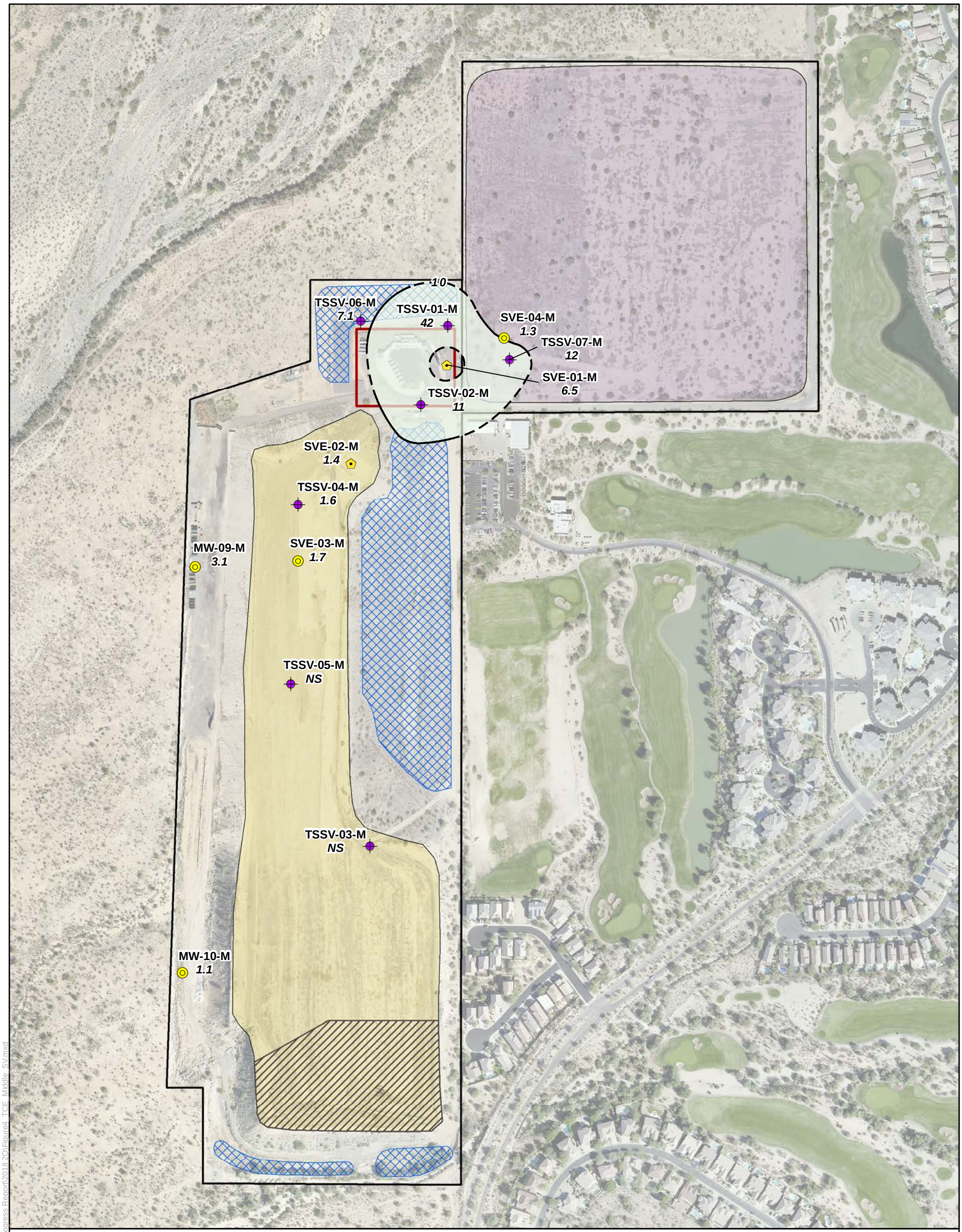

Legend

TCE Concentrations (mg/m³) in Soil Vapor

(Dashed Where Inferred)

10-100

- Monitoring Well
- Soil Vapor Extraction Well
- Vadose Zone Soil Vapor Well
- Estimated Boundary of Old Landfill Waste Area
- Estimated Boundary of New Landfill Waste Area
- Landfill Property Boundaries
- Lined Cell
- Retention Basin
- Transfer Station

Notes:

TSSV-01-M	Well Identification
42	TCE soil gas result (mg/m³) collected June 2018
ft amsl	Feet above mean sea level
mg/m³	Milligram per cubic meter
NS	Not Sampled
TCE	Trichloroethylene

Range of Vapor Well Screen Intervals: 1481-1531 ft amsl

Reference:

Imagery Source: Flood Control District of Maricopa County, 2016

0 175 350 525 700 Feet

Job No.:	1420172034
PM:	NC
Date:	8/27/2018
Scale:	1" = 350'

N

The map shown here has been created with all due and reasonable care and is strictly for use with Wood Environment & Infrastructure Solutions, Inc. Project Number 1420172034. This map has not been certified by a licensed land surveyor, and any third party use of this map comes without warranties of any kind. Wood Environment & Infrastructure Solutions, Inc. assumes no liability, direct or indirect, whatsoever for any such third party or unintended use.

2018 2nd Quarter Progress Report
Maricopa County Cave Creek Landfill
Phoenix, Arizona

Middle Zone TCE Soil Vapor Concentrations
June 2018

FIGURE
4

wood.

Path: X:\Projects\20-Longterm Projects\Cave Creek Landfill\MXD\Quarterly Progress Report\2018 2Q\Figure4_TCE_Middle_SV.mxd

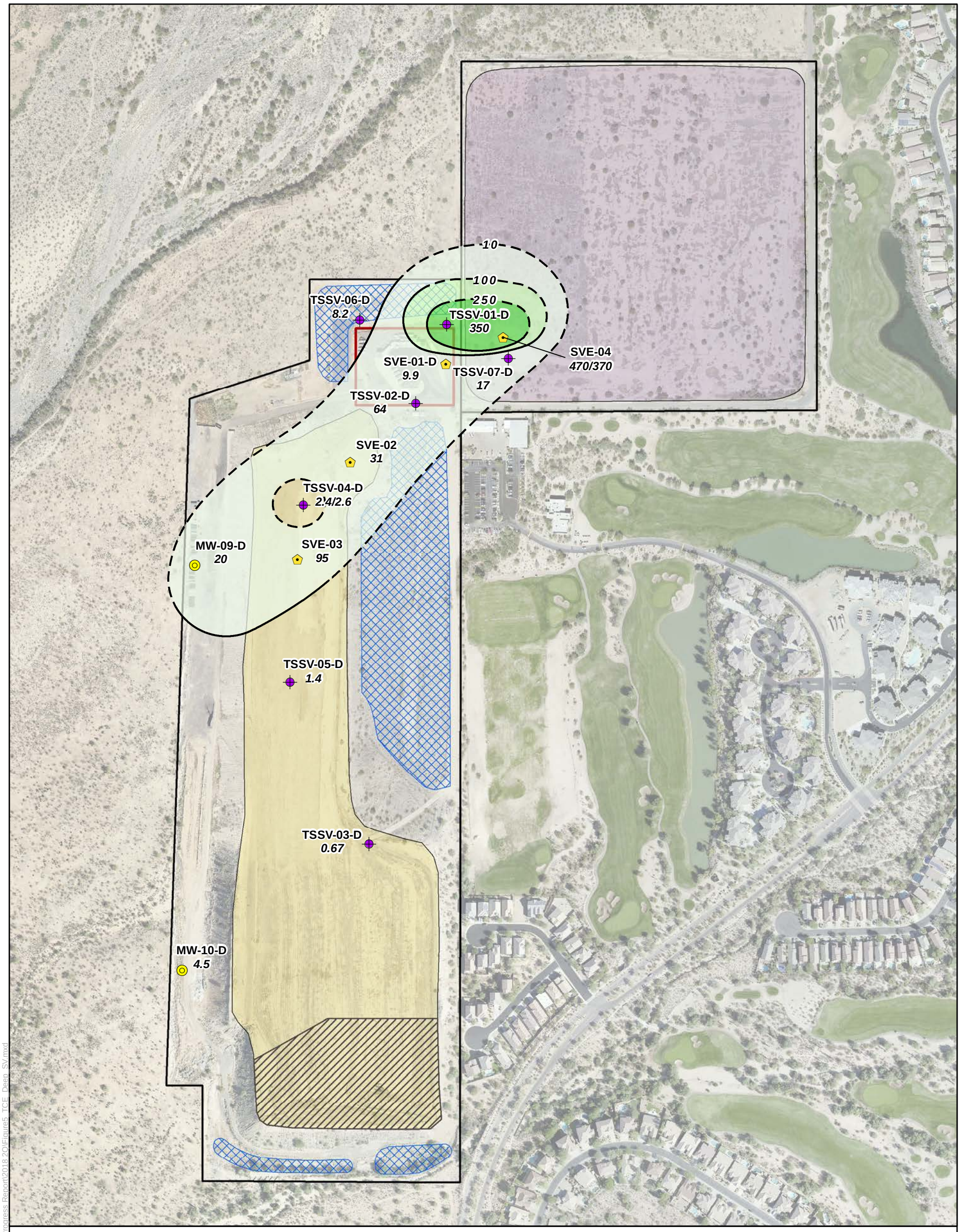

Legend

TCE Concentrations (mg/m³) in Soil Vapor

(Dashed Where Inferred)

10-100 | 100-250 | 250-500

- Monitoring Well
- Soil Vapor Extraction Well
- Vadose Zone Soil Vapor Well
- Estimated Boundary of Old Landfill Waste Area
- Estimated Boundary of New Landfill Waste Area
- Landfill Property Boundaries
- Lined Cell
- Retention Basin
- Transfer Station

Notes:

TSSV-01-D	Well Identification
350	TCE soil gas result (mg/m³) June 2018
470/370	Original/Duplicate Results
ft amsl	Feet above mean sea level
mg/m³	Milligram per cubic meter
NS	Not Sampled
TCE	Trichloroethylene

Range of Vapor Well Screen Intervals: 1282-1332 ft amsl

Reference:

Imagery Source: Flood Control District of Maricopa County, 2016

0 175 350 525 700 Feet

Job No.:	1420172034
PM:	NC
Date:	9/4/2018
Scale:	1" = 350'

N

The map shown here has been created with all due and reasonable care and is strictly for use with Wood Environment & Infrastructure Solutions, Inc. Project Number 1420172034. This map has not been certified by a licensed land surveyor, and any third party use of this map comes without warranties of any kind. Wood Environment & Infrastructure Solutions, Inc. assumes no liability, direct or indirect, whatsoever for any such third party or unintended use.

2018 2nd Quarter Progress Report
Maricopa County Cave Creek Landfill
Phoenix, Arizona

Deep Zone TCE Soil Vapor Concentrations
June 2018

FIGURE
5

wood.

Path: X:\Projects\20-Longterm Projects\Cave Creek Landfill\MXD\Quarterly Progress Report\2018 2Q\Figure5_TCE_Deep_SV.mxd

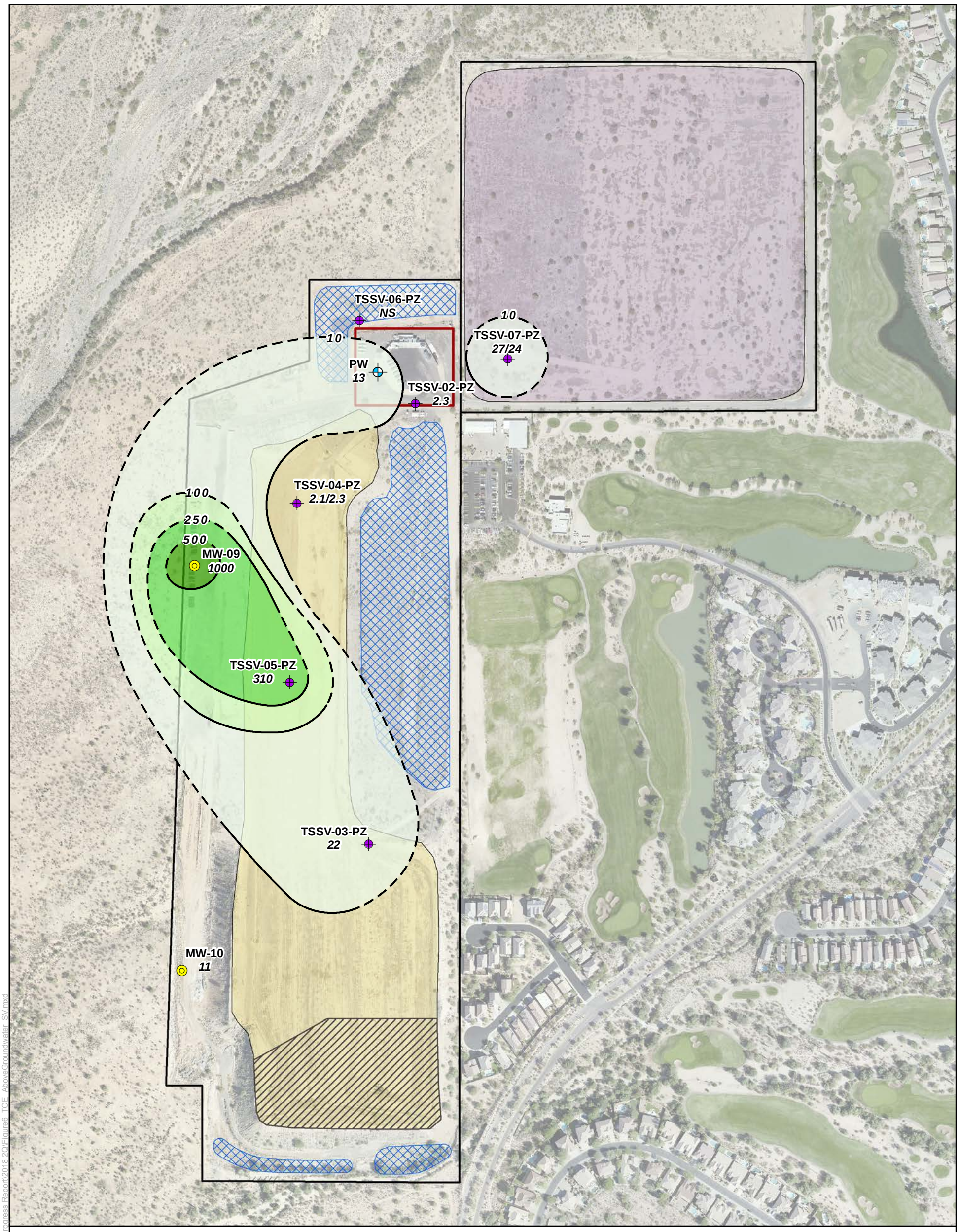

Legend

TCE Concentrations (mg/m³) in Soil Vapor
(Dashed Where Inferred)

10-100 | 100-250 | 250-500 | ≥500

- Nested Vapor Well / Piezometer
- Production Well
- Estimated Boundary of Old Landfill Waste Area
- Estimated Boundary of New Landfill Waste Area
- Groundwater Monitoring Well
- Groundwater Extraction Well
- Landfill Property Boundaries
- Lined Cell
- Retention Basin
- Transfer Station

Notes:

TSSV-02-PZ	Well Identification
2.3	TCE soil gas result (mg/m³) collected June 2018
27/24	Original/Duplicate Results
ft amsl	Feet above mean sea level
mg/m³	Milligram per cubic meter
NS	Not Sampled
TCE	Trichloroethylene

Range of Vapor Well Screen Intervals: 1162-1201 ft amsl

Reference:
Imagery Source: Flood Control District of Maricopa County, 2016

0 175 350 525 700 Feet

Job No.:	1420172034
PM:	NC
Date:	9/4/2018
Scale:	1" = 350'

N

The map shown here has been created with all due and reasonable care and is strictly for use with Wood Environment & Infrastructure Solutions, Inc. Project Number 1420172034. This map has not been certified by a licensed land surveyor, and any third party use of this map comes without warranties of any kind. Wood Environment & Infrastructure Solutions, Inc. assumes no liability, direct or indirect, whatsoever for any such third party or unintended use.

2018 2nd Quarter Progress Report
Maricopa County Cave Creek Landfill
Phoenix, Arizona

Above Water Table TCE Soil Vapor Concentrations
June 2018

FIGURE
6

wood.

Path: X:\Projects\20-Longterm Projects\Cave Creek Landfill\MXD\Quarterly Progress Report\2018 2Q\Figure6_TCE_AboveGroundwater_SV.mxd

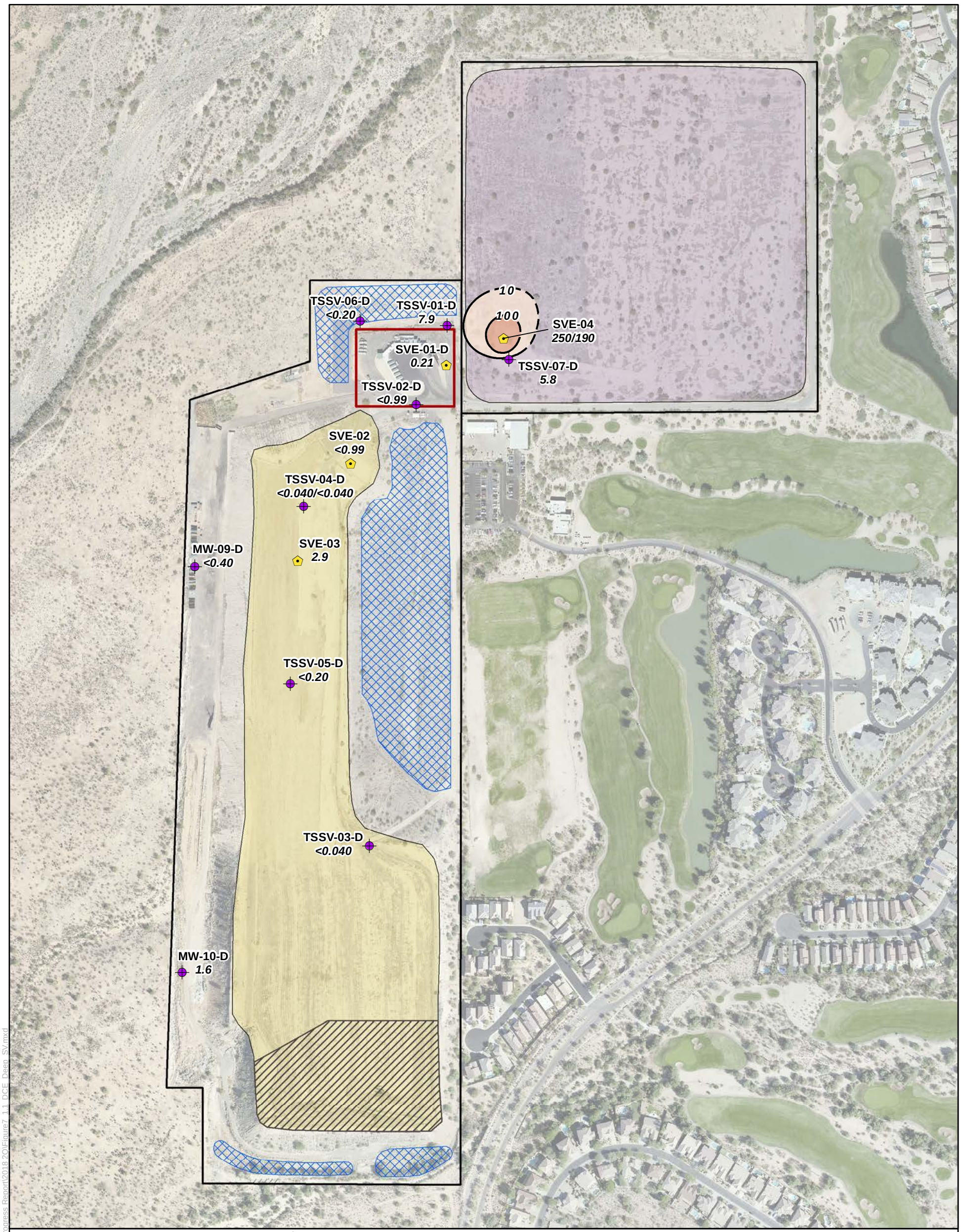

Legend

1,1-DCE Concentrations (mg/m³) in Soil Vapor

10-100

100-250

Production Well

Monitoring Well

Soil Vapor Extraction Well

Vadose Zone Soil Vapor Well

Estimated Boundary of Old Landfill Waste Area

Estimated Boundary of New Landfill Waste Area

Landfill Property Boundaries

Lined Cell

Retention Basin

Transfer Station

Notes:

SVE-01-D	Well Identification
0.21	1,1-DCE soil gas result (mg/m³) collected June 2018
240/220	Original/Duplicate Results
1,1-DCE	1,1-Dichloroethene
mg/m³	Milligram per cubic meter

Range of Vapor Well Screen Intervals: 1282-1332 ft amsl

Reference:

Imagery Source: Flood Control District of Maricopa County, 2016

0 175 350 525 700 Feet

Job No.:	1420172034
PM:	NC
Date:	9/4/2018
Scale:	1" = 350'

N

The map shown here has been created with all due and reasonable care and is strictly for use with Wood Environment & Infrastructure Solutions, Inc. Project Number 1420172034. This map has not been certified by a licensed land surveyor, and any third party use of this map comes without warranties of any kind. Wood Environment & Infrastructure Solutions, Inc. assumes no liability, direct or indirect, whatsoever for any such third party or unintended use.

2018 2nd Quarter Progress Report
Maricopa County Cave Creek Landfill
Phoenix, Arizona

Deep Zone 1,1-DCE Soil Vapor Concentrations June 2018

FIGURE **7**

wood.

Path: X:\Projects\20-Longterm Projects\Cave Creek Landfill\MXD\Quarterly Progress Report\2018 2Q\Figure7_1,1_DCE_Deep_SV.mxd

PRESSURE FLOW THROUGH CARBON ADSORPTION SYSTEM

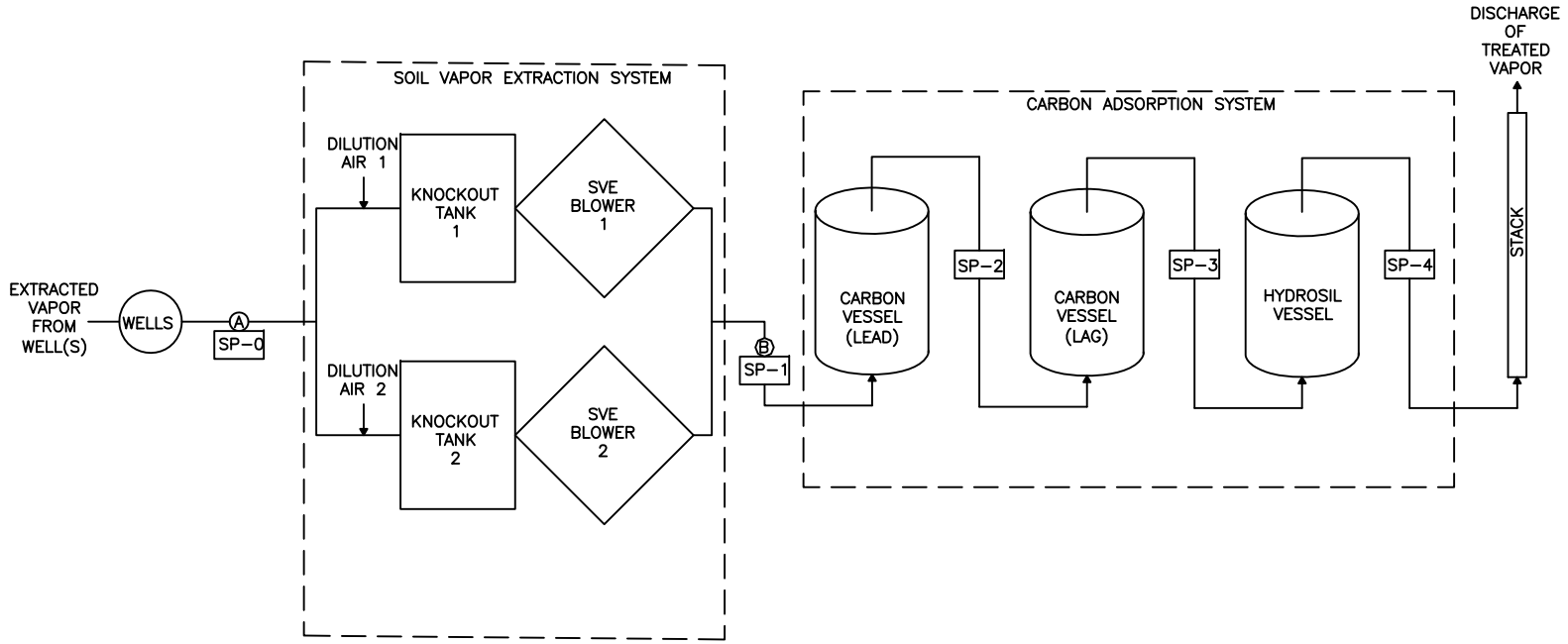

LEGEND

- Ⓐ SYSTEM FLOW MEASUREMENT (PRE-DILUTION LOCATION)
- Ⓑ SYSTEM FLOW MEASUREMENT (POST-DILUTION LOCATION)
- SP-0 SYSTEM INLET SAMPLE LOCATION
- SP-1 CAS INLET SAMPLE LOCATION
- SP-2 CAS LEAD VESSEL OUTLET SAMPLE LOCATION
- SP-3 CAS LAG VESSEL OUTLET SAMPLE LOCATION
- SP-4 CAS OUTLET SAMPLE LOCATION

CLIENT	MARICOPA COUNTY				
PROJECT	CAVE CREEK LANDFILL				
TITLE	SVE SYSTEM PROCESS FLOW DIAGRAM – PRESSURE FLOW				
DESIGNED BY	BJN	CHECKED BY	AY	DATE	ISSUED FOR
DRAWN BY	BJN	APPROVED BY	NC	11/15/16	FINAL
FILENAME FIGURE 8		FIGURE No. 8.1	REV 1	PROJECT NO. 14-2014-2020	

amec foster wheeler

G:\Environmental-Development\2014 Projects\14-2014-2020 Cave Creek Landfill FY 2015\5.0_Technical\5.1_Reports_Deliverables\5.1.27_SVE Expansion OMM\Support-6/1/2017 3:02 PM

VACUUM FLOW THROUGH CARBON ADSORPTION SYSTEM

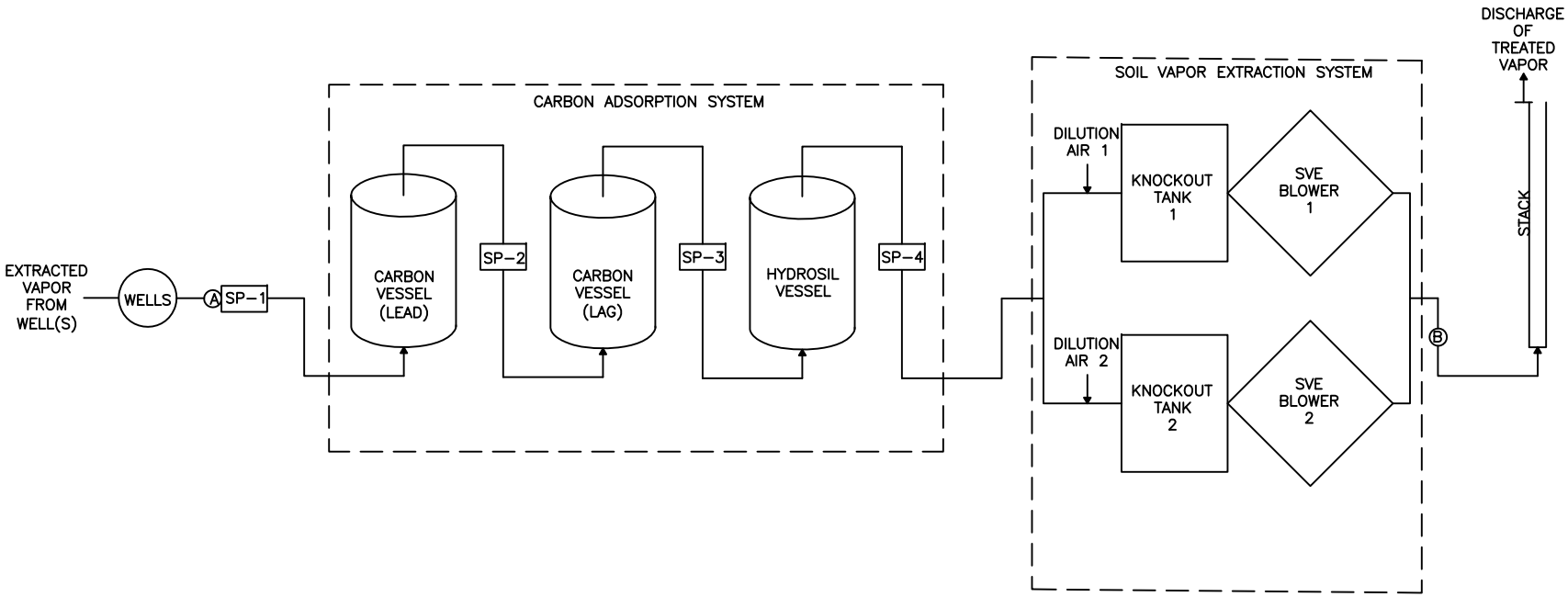

LEGEND

- Ⓐ SYSTEM FLOW MEASUREMENT (PRE-DILUTION LOCATION)
- Ⓑ SYSTEM FLOW MEASUREMENT (POST-DILUTION LOCATION)
- SP-0 SYSTEM INLET SAMPLE LOCATION
- SP-1 CAS INLET SAMPLE LOCATION
- SP-2 CAS LEAD VESSEL OUTLET SAMPLE LOCATION
- SP-3 CAS LAG VESSEL OUTLET SAMPLE LOCATION
- SP-4 CAS OUTLET SAMPLE LOCATION

CLIENT	MARICOPA COUNTY				
PROJECT	CAVE CREEK LANDFILL				
TITLE	SVE SYSTEM PROCESS FLOW DIAGRAM – VACUUM FLOW				
DESIGNED BY	BJN	CHECKED BY	AY	DATE	ISSUED FOR
DRAWN BY	BJN	APPROVED BY	NC	11/15/16	FINAL
FILENAME	FIGURE 8	FIGURE No.	8.2	REV 1	PROJECT NO. 14-2014-2020

amec foster wheeler

G:\Environmental-Development\2014 Projects\14-2014-2020 Cave Creek Landfill FY 2015\5.0_Technical\5.1_Reports_Deliverables\5.1.27_SVE Expansion OMM\Support-6/1/2017 3:02 PM

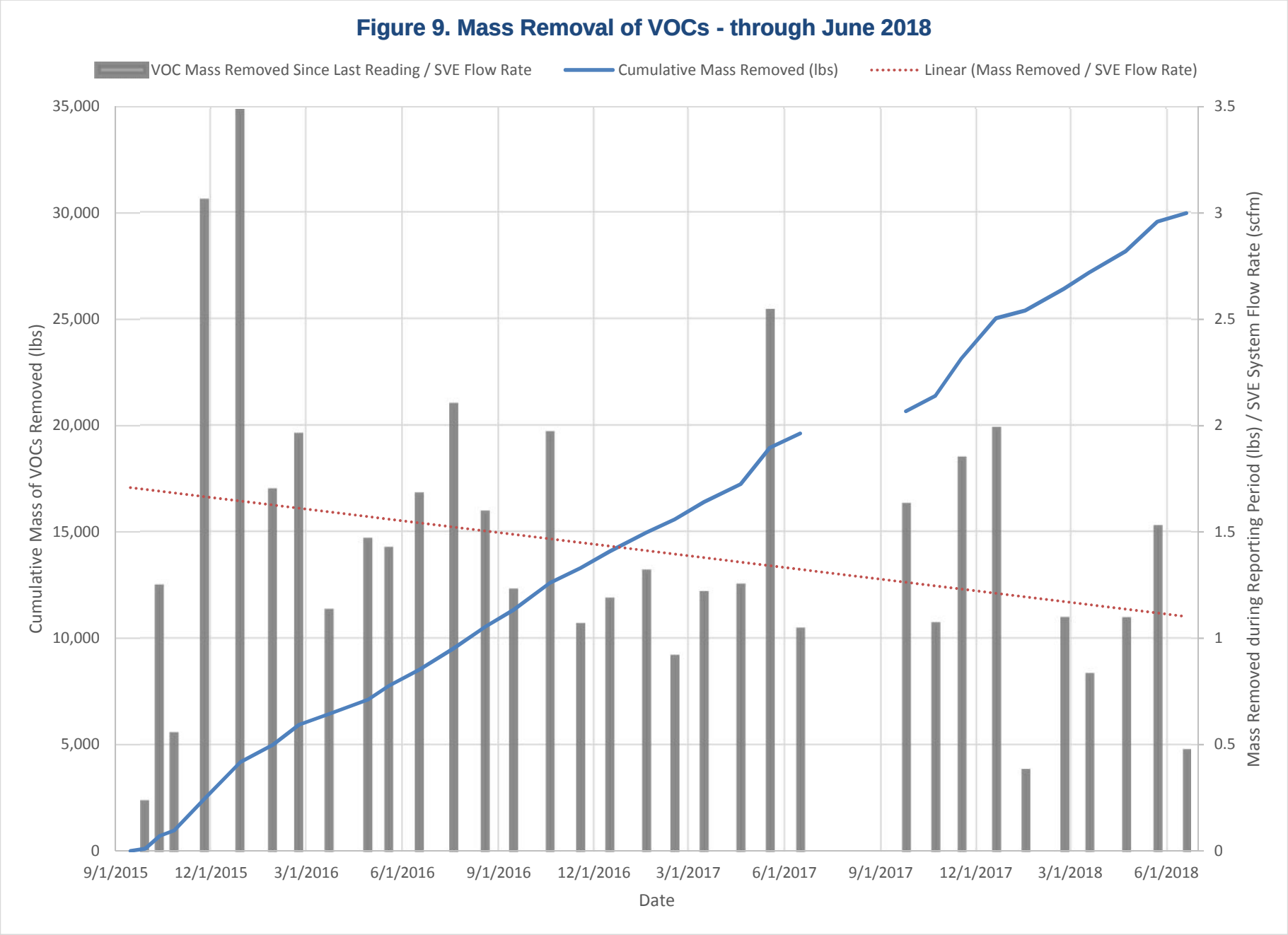
Figure 9. Mass Removal of VOCs - through June 2018
VOC Mass Removed Since Last Reading / SVE Flow Rate
Cumulative Mass Removed (lbs)
Linear (Mass Removed / SVE Flow Rate)
Cumulative Mass of VOCs Removed (lbs)
Mass Removed during Reporting Period (lbs) / SVE System Flow Rate (scfm)
35,000
30,000
25,000
20,000
15,000
10,000
5,000
0
3.5
3
2.5
2
1.5
1
0.5
0
9/1/2015
12/1/2015
3/1/2016
6/1/2016
9/1/2016
12/1/2016
3/1/2017
6/1/2017
9/1/2017
12/1/2017
3/1/2018
6/1/2018
Date

APPENDIX A

LABORATORY REPORTS OF ANALYSIS

Analytical Report 585543

for

AMEC Foster Wheeler

Project Manager: Samantha Sargent

Cave Creek Landfill - Maricopa

1420172034.**.021**

31-MAY-18

Collected By: Client

2525 West Huntington Drive, Suite 102
Tempe, AZ 85282
Ph: (480) 355-0900

Phoenix (EPA Lab Code: AZ00901): Arizona (AZ0757)
Xenco-Houston (EPA Lab code: TX00122): Arizona (AZ0765)
Xenco-Dallas (EPA Lab code: TX01468): Arizona (AZ0809)

31-MAY-18

Project Manager: **Samantha Sargent**
AMEC Foster Wheeler
4600 E. Washington Suite 600
Phoenix, AZ 85034

Reference: TWA Report No(s): **585543**
Cave Creek Landfill - Maricopa
Project Address:

Samantha Sargent :

We are reporting to you the results of the analyses performed on the samples received under the project name referenced above and identified with the TWA Report Number(s) 585543. All results being reported under this Report Number apply to the samples analyzed and properly identified with a Laboratory ID number. Subcontracted analyses are identified in this report with either the ADHS certification number of the subcontract lab in the analyst ID field, or the complete subcontracted report attached to this report.

Unless otherwise noted in a Case Narrative, all data reported in this Analytical Report are in compliance with ADHS standards. The uncertainty of measurement associated with the results of analysis reported is available upon request. Should insufficient sample be provided to the laboratory to meet the method and ADHS Matrix Duplicate and Matrix Spike requirements, then the data will be analyzed, evaluated and reported using all other available quality control measures.

The validity and integrity of this report will remain intact as long as it is accompanied by this letter and reproduced in full, unless written approval is granted by TransWest Analytical. This report will be filed for at least 5 years in our archives after which time it will be destroyed without further notice, unless otherwise arranged with you. The samples received, and described as recorded in Report No. 585543 will be filed for 45 days, and after that time they will be properly disposed without further notice, unless otherwise arranged with you. We reserve the right to return to you any unused samples, extracts or solutions related to them if we consider so necessary (e.g., samples identified as hazardous waste, sample sizes exceeding analytical standard practices, controlled substances under regulated protocols, etc).

We thank you for selecting TransWest Analytical to serve your analytical needs. If you have any questions concerning this report, please feel free to contact us at any time.

Respectfully,

Skip Harden
Project Manager

Recipient of the Prestigious Small Business Administration Award of Excellence in 1994.
Certified and approved by numerous States and Agencies.
A Small Business and Minority Status Company that delivers SERVICE and QUALITY

Houston - Dallas - Midland - San Antonio - Phoenix - Oklahoma - Latin America

Sample receipt non conformances and comments:

None

Sample receipt non conformances and comments per sample:

None

Analytical non conformances and comments:

Batch: LBA-3050960 VOCs by SW 8260B

N1:

Trichlorofluoromethane recovered above acceptance criteria in the LCS/LCSD and MS/MSD. This equates to a potential high bias. Since the associated field samples were non-detect for Trichlorofluoromethane, no further action was required.

Flagging Criteria

Arizona Flags

All method blanks, laboratory spikes, and/or matrix spikes met quality control objectives for the parameters associated with this Work Order except as detailed below or on the Data Qualifier page of this report. Data Qualifiers used in this report are in accordance with ADHS Data Qualifiers, Revision 4.0 9/05/2012.
Data qualifiers (flags) contained within this analytical report have been issued to explain a quality control deficiency, and do not affect the quality (validity) of the data unless noted otherwise in the case narrative.

D1 Sample required dilution due to matrix.

D2 Sample required dilution due to high concentration of target analyte.

E4 Concentration estimated. Analyte was detected below laboratory minimum reporting limit (MRL).

E8 Analyte reported to MDL per project specification. Target analyte was not detected in sample.

L1 The associated blank spike recovery was above laboratory acceptance limits.

L2 The associated blank spike recovery was below laboratory acceptance limits.

M2 Matrix spike recovery was low; the associated blank spike recovery was acceptable.

M3 The spike recovery value is unusable since the analyte concentration in the sample is disproportionate to spike level. The associated blank spike recovery was acceptable.

N1 See case narrative.

R5 MS/MSD RPD exceeded the laboratory acceptance limit. Recovery met acceptance criteria.

T4 Tentatively identified compound. Concentration is estimated and based on the closest internal standard.

Sample Cross Reference 585543

AMEC Foster Wheeler, Phoenix, AZ

Cave Creek Landfill - Maricopa

Sample Id	Matrix	Date Collected	Sample Depth	Lab Sample Id
MW02-714-050718	W	05-07-18 09:48		585543-001
MW03-723-050818	W	05-08-18 11:52		585543-002
MW05-704-050918	W	05-09-18 13:15		585543-003
MW06-720-050818	W	05-08-18 10:25		585543-004
MW07-718-050818	W	05-08-18 08:47		585543-005
MW08-741-050718	W	05-07-18 10:50		585543-006
PW-734-051018	W	05-10-18 07:20		585543-007
TSSV02-732-050918	W	05-09-18 11:36		585543-008
TSSV03-758-050918	W	05-09-18 10:03		585543-009
TSSV04-760-050818	W	05-08-18 13:31		585543-010
TSSV05-760-050918	W	05-09-18 08:40		585543-011
TSSV06-729-050718	W	05-07-18 08:08		585543-012
TSSV07-742-050818	W	05-08-18 07:45		585543-013
EW01-712-050718	W	05-07-18 09:10		585543-014
MW09-718-050918	W	05-09-18 10:55		585543-015
MW10-704-050918	W	05-09-18 12:39		585543-016
DUP01-050718	W	05-07-18 15:05		585543-017
DUP02-050918	W	05-09-18 14:35		585543-018
PDB Blank-051018	W	05-10-18 09:38		585543-019
Trip Blank-051018	W	05-10-18 09:50		585543-020

Certificate of Analytical Results 585543

AMEC Foster Wheeler, Phoenix, AZ

Cave Creek Landfill - Maricopa

Sample Id: **MW02-714-050718**
Lab Sample Id: 585543-001

Matrix: Water
Date Collected: 05.07.18 09.48

Date Received:05.10.18 14.10

Analytical Method: VOCs by SW 8260B
Tech: MNI
Analyst: MNI
Seq Number: 3051122

Date Prep: 05.21.18 10.31

Prep Method: SW5030C
% Solids:

Parameter	Cas Number	Result	RL	MDL	Units	Analysis Date	Flag	Dil
1,1,1,2-Tetrachloroethane	630-20-6	<0.100	0.500	0.100	ug/L	05.21.18 13.32	E8	1
1,1,1-Trichloroethane	71-55-6	<0.200	0.500	0.200	ug/L	05.21.18 13.32	E8	1
1,1,2,2-Tetrachloroethane	79-34-5	<0.100	0.500	0.100	ug/L	05.21.18 13.32	E8	1
1,1,2-Trichloroethane	79-00-5	<0.0900	0.500	0.0900	ug/L	05.21.18 13.32	E8	1
1,1-Dichloroethane	75-34-3	**1.35**	0.500	0.0700	ug/L	05.21.18 13.32		1
1,1-Dichloroethene	75-35-4	<0.200	0.500	0.200	ug/L	05.21.18 13.32	E8	1
1,1-Dichloropropene	563-58-6	<0.200	1.00	0.200	ug/L	05.21.18 13.32	E8	1
1,2,3-Trichlorobenzene	87-61-6	<0.200	5.00	0.200	ug/L	05.21.18 13.32	E8	1
1,2,3-Trichloropropane	96-18-4	<0.200	1.00	0.200	ug/L	05.21.18 13.32	E8	1
1,2,4-Trichlorobenzene	120-82-1	<0.0700	5.00	0.0700	ug/L	05.21.18 13.32	E8	1
1,2,4-Trimethylbenzene	95-63-6	<0.0700	2.00	0.0700	ug/L	05.21.18 13.32	E8	1
1,2-Dibromo-3-Chloropropane	96-12-8	<0.300	2.00	0.300	ug/L	05.21.18 13.32	E8	1
1,2-Dibromoethane	106-93-4	<0.200	0.500	0.200	ug/L	05.21.18 13.32	E8	1
1,2-Dichlorobenzene	95-50-1	<0.0800	1.50	0.0800	ug/L	05.21.18 13.32	E8	1
1,2-Dichloroethane	107-06-2	<0.100	0.500	0.100	ug/L	05.21.18 13.32	E8	1
1,2-Dichloropropane	78-87-5	<0.0900	0.500	0.0900	ug/L	05.21.18 13.32	E8	1
1,3,5-Trimethylbenzene	108-67-8	<0.0700	1.50	0.0700	ug/L	05.21.18 13.32	E8	1
1,3-Dichlorobenzene	541-73-1	<0.0600	1.50	0.0600	ug/L	05.21.18 13.32	E8	1
1,3-Dichloropropane	142-28-9	<0.0700	1.00	0.0700	ug/L	05.21.18 13.32	E8	1
1,4-Dichlorobenzene	106-46-7	<0.200	1.50	0.200	ug/L	05.21.18 13.32	E8	1
2,2-Dichloropropane	594-20-7	<0.200	0.500	0.200	ug/L	05.21.18 13.32	L2E8	1
2-Butanone	78-93-3	<0.300	5.00	0.300	ug/L	05.21.18 13.32	E8	1
2-Chlorotoluene	95-49-8	<0.0800	1.50	0.0800	ug/L	05.21.18 13.32	E8	1
2-Hexanone	591-78-6	<0.200	5.00	0.200	ug/L	05.21.18 13.32	E8	1
4-Chlorotoluene	106-43-4	<0.0700	2.00	0.0700	ug/L	05.21.18 13.32	E8	1
4-Methyl-2-Pentanone	108-10-1	<0.200	5.00	0.200	ug/L	05.21.18 13.32	E8	1
Acetone	67-64-1	**93.9**	20.0	0.600	ug/L	05.21.18 13.32		1
Benzene	71-43-2	<0.100	0.500	0.100	ug/L	05.21.18 13.32	E8	1
Bromobenzene	108-86-1	<0.0900	1.50	0.0900	ug/L	05.21.18 13.32	E8	1
Bromochloromethane	74-97-5	<0.200	0.500	0.200	ug/L	05.21.18 13.32	E8	1
Bromodichloromethane	75-27-4	<0.0800	0.500	0.0800	ug/L	05.21.18 13.32	E8	1
Bromoform	75-25-2	<0.100	1.00	0.100	ug/L	05.21.18 13.32	E8	1
Bromomethane	74-83-9	<0.300	5.00	0.300	ug/L	05.21.18 13.32	E8	1
Carbon Disulfide	75-15-0	<0.0900	0.500	0.0900	ug/L	05.21.18 13.32	E8	1
Carbon Tetrachloride	56-23-5	<0.200	0.500	0.200	ug/L	05.21.18 13.32	E8	1
Chlorobenzene	108-90-7	<0.0700	0.500	0.0700	ug/L	05.21.18 13.32	E8	1
Chloroethane	75-00-3	<0.600	4.00	0.600	ug/L	05.21.18 13.32	E8	1
Chloroform	67-66-3	<0.0700	0.500	0.0700	ug/L	05.21.18 13.32	E8	1

Final 1.000

Certificate of Analytical Results 585543

AMEC Foster Wheeler, Phoenix, AZ

Cave Creek Landfill - Maricopa

Sample Id: **MW02-714-050718** Matrix: Water Date Received:05.10.18 14.10
Lab Sample Id: 585543-001 Date Collected: 05.07.18 09.48

Analytical Method: VOCs by SW 8260B Prep Method: SW5030C
Tech: MNI % Solids:
Analyst: MNI Date Prep: 05.21.18 10.31
Seq Number: 3051122

Parameter	Cas Number	Result	RL	MDL	Units	Analysis Date	Flag	Dil
Chloromethane	74-87-3	<0.200	5.00	0.200	ug/L	05.21.18 13.32	E8	1
cis-1,2-Dichloroethene	156-59-2	**2.33**	0.500	0.200	ug/L	05.21.18 13.32		1
cis-1,3-Dichloropropene	10061-01-5	<0.0800	1.00	0.0800	ug/L	05.21.18 13.32	E8	1
Dibromochloromethane	124-48-1	<0.0700	0.500	0.0700	ug/L	05.21.18 13.32	E8	1
Dibromomethane	74-95-3	<0.200	0.500	0.200	ug/L	05.21.18 13.32	E8	1
Dichlorodifluoromethane	75-71-8	**1.73**	2.00	0.200	ug/L	05.21.18 13.32	E4	1
Ethylbenzene	100-41-4	<0.0900	2.00	0.0900	ug/L	05.21.18 13.32	E8	1
Hexachlorobutadiene	87-68-3	<0.200	5.00	0.200	ug/L	05.21.18 13.32	E8	1
Iodomethane (Methyl Iodide)	74-88-4	<0.300	2.00	0.300	ug/L	05.21.18 13.32	E8	1
isopropylbenzene	98-82-8	<0.0800	2.50	0.0800	ug/L	05.21.18 13.32	E8	1
m,p-Xylenes	179601-23-1	<0.0900	2.00	0.0900	ug/L	05.21.18 13.32	E8	1
Methylene Chloride	75-09-2	<0.200	3.00	0.200	ug/L	05.21.18 13.32	E8	1
MTBE	1634-04-4	<0.100	2.00	0.100	ug/L	05.21.18 13.32	E8	1
Naphthalene	91-20-3	<0.200	5.00	0.200	ug/L	05.21.18 13.32	E8	1
n-Butylbenzene	104-51-8	<0.200	2.50	0.200	ug/L	05.21.18 13.32	E8	1
n-Propylbenzene	103-65-1	<0.0800	2.00	0.0800	ug/L	05.21.18 13.32	E8	1
o-Xylene	95-47-6	<0.0900	1.00	0.0900	ug/L	05.21.18 13.32	E8	1
p-Cymene (p-Isopropyltoluene)	99-87-6	<0.100	1.50	0.100	ug/L	05.21.18 13.32	E8	1
Sec-Butylbenzene	135-98-8	<0.100	1.50	0.100	ug/L	05.21.18 13.32	E8	1
Styrene	100-42-5	<0.0800	1.00	0.0800	ug/L	05.21.18 13.32	E8	1
tert-Butylbenzene	98-06-6	<0.200	2.50	0.200	ug/L	05.21.18 13.32	E8	1
Tetrachloroethylene	127-18-4	**1.80**	0.500	0.0800	ug/L	05.21.18 13.32		1
Toluene	108-88-3	<0.0700	2.00	0.0700	ug/L	05.21.18 13.32	E8	1
Total Trihalomethane		<0.0700	0.500	0.0700	ug/L	05.21.18 13.32	E8	1
Total Xylenes	1330-20-7	<0.0900	1.00	0.0900	ug/L	05.21.18 13.32	E8	1
trans-1,2-dichloroethene	156-60-5	<0.0900	0.500	0.0900	ug/L	05.21.18 13.32	E8	1
Trichloroethene	79-01-6	**86.8**	0.500	0.200	ug/L	05.21.18 13.32	M3	1
Trichlorofluoromethane	75-69-4	<0.400	2.00	0.400	ug/L	05.21.18 13.32	E8	1
Vinyl Acetate	108-05-4	<0.200	5.00	0.200	ug/L	05.21.18 13.32	E8	1
Vinyl Chloride	75-01-4	<0.100	0.500	0.100	ug/L	05.21.18 13.32	E8	1
trans-1,3-dichloropropene	10061-02-6	<0.0600	0.500	0.0600	ug/L	05.21.18 13.32	E8	1
1,1,2-Trichloro-1,2,2-Trifluoroethane	76-13-1	<0.300	5.00	0.300	ug/L	05.21.18 13.32	E8	1
1,3-Butadiene	106-99-0	<0.276	5.00	0.276	ug/L	05.21.18 13.32	E8	1
Cyclohexane	110-82-7	<0.115	5.00	0.115	ug/L	05.21.18 13.32	E8	1
Dicyclopentadiene	77-73-6	<0.0540	5.00	0.0540	ug/L	05.21.18 13.32	E8	1
Methylcyclohexane	108-87-2	<0.117	5.00	0.117	ug/L	05.21.18 13.32	E8	1
n-Hexane	110-54-3	<0.0920	5.00	0.0920	ug/L	05.21.18 13.32	E8	1
4-Ethyltoluene	622-96-8	Not Present			ug/L	05.21.18 13.32	T4E8	1

Certificate of Analytical Results 585543

AMEC Foster Wheeler, Phoenix, AZ

Cave Creek Landfill - Maricopa

Sample Id: **MW02-714-050718**
Lab Sample Id: 585543-001

Matrix: Water
Date Collected: 05.07.18 09.48

Date Received:05.10.18 14.10

Analytical Method: VOCs by SW 8260B
Tech: MNI
Analyst: MNI
Seq Number: 3051122

Date Prep: 05.21.18 10.31

Prep Method: SW5030C
% Solids:

Parameter	Cas Number	Result	RL	MDL	Units	Analysis Date	Flag	Dil
Propene	115-07-1	Not Present			ug/L	05.21.18 13.32	T4E8	1

Surrogate	% Recovery	Units	Limits	Analysis Date	Flag
4-Bromofluorobenzene	97	%	74-124	05.21.18 13.32	
Dibromofluoromethane	86	%	75-131	05.21.18 13.32	
1,2-Dichloroethane-D4	96	%	63-144	05.21.18 13.32	
Toluene-D8	89	%	80-117	05.21.18 13.32	

Certificate of Analytical Results 585543

AMEC Foster Wheeler, Phoenix, AZ

Cave Creek Landfill - Maricopa

Sample Id: **MW03-723-050818** Matrix: Water Date Received:05.10.18 14.10
Lab Sample Id: 585543-002 Date Collected: 05.08.18 11.52

Analytical Method: VOCs by SW 8260B Prep Method: SW5030C
Tech: MNI % Solids:
Analyst: MNI Date Prep: 05.22.18 12.55
Seq Number: 3050960

Parameter	Cas Number	Result	RL	MDL	Units	Analysis Date	Flag	Dil
1,1,1,2-Tetrachloroethane	630-20-6	<0.100	0.500	0.100	ug/L	05.22.18 16.11	E8	1
1,1,1-Trichloroethane	71-55-6	<0.200	0.500	0.200	ug/L	05.22.18 16.11	E8	1
1,1,2,2-Tetrachloroethane	79-34-5	<0.100	0.500	0.100	ug/L	05.22.18 16.11	E8	1
1,1,2-Trichloroethane	79-00-5	<0.0900	0.500	0.0900	ug/L	05.22.18 16.11	E8	1
1,1-Dichloroethane	75-34-3	<0.0700	0.500	0.0700	ug/L	05.22.18 16.11	E8	1
1,1-Dichloroethene	75-35-4	<0.200	0.500	0.200	ug/L	05.22.18 16.11	E8	1
1,1-Dichloropropene	563-58-6	<0.200	1.00	0.200	ug/L	05.22.18 16.11	E8	1
1,2,3-Trichlorobenzene	87-61-6	<0.200	5.00	0.200	ug/L	05.22.18 16.11	E8	1
1,2,3-Trichloropropane	96-18-4	<0.200	1.00	0.200	ug/L	05.22.18 16.11	E8	1
1,2,4-Trichlorobenzene	120-82-1	<0.0700	5.00	0.0700	ug/L	05.22.18 16.11	E8	1
1,2,4-Trimethylbenzene	95-63-6	<0.0700	2.00	0.0700	ug/L	05.22.18 16.11	E8	1
1,2-Dibromo-3-Chloropropane	96-12-8	<0.300	2.00	0.300	ug/L	05.22.18 16.11	L2E8	1
1,2-Dibromoethane	106-93-4	<0.200	0.500	0.200	ug/L	05.22.18 16.11	E8	1
1,2-Dichlorobenzene	95-50-1	<0.0800	1.50	0.0800	ug/L	05.22.18 16.11	E8	1
1,2-Dichloroethane	107-06-2	<0.100	0.500	0.100	ug/L	05.22.18 16.11	E8	1
1,2-Dichloropropane	78-87-5	<0.0900	0.500	0.0900	ug/L	05.22.18 16.11	E8	1
1,3,5-Trimethylbenzene	108-67-8	<0.0700	1.50	0.0700	ug/L	05.22.18 16.11	E8	1
1,3-Dichlorobenzene	541-73-1	<0.0600	1.50	0.0600	ug/L	05.22.18 16.11	E8	1
1,3-Dichloropropane	142-28-9	<0.0700	1.00	0.0700	ug/L	05.22.18 16.11	E8	1
1,4-Dichlorobenzene	106-46-7	<0.200	1.50	0.200	ug/L	05.22.18 16.11	E8	1
2,2-Dichloropropane	594-20-7	<0.200	0.500	0.200	ug/L	05.22.18 16.11	E8	1
2-Butanone	78-93-3	<0.300	5.00	0.300	ug/L	05.22.18 16.11	E8	1
2-Chlorotoluene	95-49-8	<0.0800	1.50	0.0800	ug/L	05.22.18 16.11	E8	1
2-Hexanone	591-78-6	<0.200	5.00	0.200	ug/L	05.22.18 16.11	E8	1
4-Chlorotoluene	106-43-4	<0.0700	2.00	0.0700	ug/L	05.22.18 16.11	E8	1
4-Methyl-2-Pentanone	108-10-1	<0.200	5.00	0.200	ug/L	05.22.18 16.11	E8	1
Acetone	67-64-1	**68.7**	20.0	0.600	ug/L	05.22.18 16.11		1
Benzene	71-43-2	<0.100	0.500	0.100	ug/L	05.22.18 16.11	E8	1
Bromobenzene	108-86-1	<0.0900	1.50	0.0900	ug/L	05.22.18 16.11	E8	1
Bromochloromethane	74-97-5	<0.200	0.500	0.200	ug/L	05.22.18 16.11	E8	1
Bromodichloromethane	75-27-4	<0.0800	0.500	0.0800	ug/L	05.22.18 16.11	E8	1
Bromoform	75-25-2	<0.100	1.00	0.100	ug/L	05.22.18 16.11	E8	1
Bromomethane	74-83-9	<0.300	5.00	0.300	ug/L	05.22.18 16.11	E8	1
Carbon Disulfide	75-15-0	<0.0900	0.500	0.0900	ug/L	05.22.18 16.11	E8	1
Carbon Tetrachloride	56-23-5	<0.200	0.500	0.200	ug/L	05.22.18 16.11	E8	1
Chlorobenzene	108-90-7	<0.0700	0.500	0.0700	ug/L	05.22.18 16.11	E8	1
Chloroethane	75-00-3	<0.600	4.00	0.600	ug/L	05.22.18 16.11	E8	1
Chloroform	67-66-3	<0.0700	0.500	0.0700	ug/L	05.22.18 16.11	E8	1

Certificate of Analytical Results 585543

AMEC Foster Wheeler, Phoenix, AZ

Cave Creek Landfill - Maricopa

Sample Id: **MW03-723-050818** Matrix: Water Date Received:05.10.18 14.10
Lab Sample Id: 585543-002 Date Collected: 05.08.18 11.52

Analytical Method: VOCs by SW 8260B Prep Method: SW5030C
Tech: MNI % Solids:
Analyst: MNI Date Prep: 05.22.18 12.55
Seq Number: 3050960

Parameter	Cas Number	Result	RL	MDL	Units	Analysis Date	Flag	Dil
Chloromethane	74-87-3	<0.200	5.00	0.200	ug/L	05.22.18 16.11	E8	1
cis-1,2-Dichloroethene	156-59-2	<0.200	0.500	0.200	ug/L	05.22.18 16.11	E8	1
cis-1,3-Dichloropropene	10061-01-5	<0.0800	1.00	0.0800	ug/L	05.22.18 16.11	E8	1
Dibromochloromethane	124-48-1	<0.0700	0.500	0.0700	ug/L	05.22.18 16.11	E8	1
Dibromomethane	74-95-3	<0.200	0.500	0.200	ug/L	05.22.18 16.11	E8	1
Dichlorodifluoromethane	75-71-8	<0.200	2.00	0.200	ug/L	05.22.18 16.11	L1E8	1
Ethylbenzene	100-41-4	<0.0900	2.00	0.0900	ug/L	05.22.18 16.11	E8	1
Hexachlorobutadiene	87-68-3	<0.200	5.00	0.200	ug/L	05.22.18 16.11	E8	1
Iodomethane (Methyl Iodide)	74-88-4	<0.300	2.00	0.300	ug/L	05.22.18 16.11	E8	1
isopropylbenzene	98-82-8	<0.0800	2.50	0.0800	ug/L	05.22.18 16.11	E8	1
m,p-Xylenes	179601-23-1	<0.0900	2.00	0.0900	ug/L	05.22.18 16.11	E8	1
Methylene Chloride	75-09-2	<0.200	3.00	0.200	ug/L	05.22.18 16.11	E8	1
MTBE	1634-04-4	<0.100	2.00	0.100	ug/L	05.22.18 16.11	E8	1
Naphthalene	91-20-3	<0.200	5.00	0.200	ug/L	05.22.18 16.11	E8	1
n-Butylbenzene	104-51-8	<0.200	2.50	0.200	ug/L	05.22.18 16.11	E8	1
n-Propylbenzene	103-65-1	<0.0800	2.00	0.0800	ug/L	05.22.18 16.11	E8	1
o-Xylene	95-47-6	<0.0900	1.00	0.0900	ug/L	05.22.18 16.11	E8	1
p-Cymene (p-Isopropyltoluene)	99-87-6	<0.100	1.50	0.100	ug/L	05.22.18 16.11	E8	1
Sec-Butylbenzene	135-98-8	<0.100	1.50	0.100	ug/L	05.22.18 16.11	E8	1
Styrene	100-42-5	<0.0800	1.00	0.0800	ug/L	05.22.18 16.11	E8	1
tert-Butylbenzene	98-06-6	<0.200	2.50	0.200	ug/L	05.22.18 16.11	E8	1
Tetrachloroethylene	127-18-4	<0.0800	0.500	0.0800	ug/L	05.22.18 16.11	E8	1
Toluene	108-88-3	<0.0700	2.00	0.0700	ug/L	05.22.18 16.11	E8	1
Total Trihalomethane		<0.0700	0.500	0.0700	ug/L	05.22.18 16.11	E8	1
Total Xylenes	1330-20-7	<0.0900	1.00	0.0900	ug/L	05.22.18 16.11	E8	1
trans-1,2-dichloroethene	156-60-5	<0.0900	0.500	0.0900	ug/L	05.22.18 16.11	E8	1
Trichloroethene	79-01-6	**1.01**	0.500	0.200	ug/L	05.22.18 16.11		1
Trichlorofluoromethane	75-69-4	<0.400	2.00	0.400	ug/L	05.22.18 16.11	N1E8	1
Vinyl Acetate	108-05-4	<0.200	5.00	0.200	ug/L	05.22.18 16.11	E8	1
Vinyl Chloride	75-01-4	<0.100	0.500	0.100	ug/L	05.22.18 16.11	E8	1
trans-1,3-dichloropropene	10061-02-6	<0.0600	0.500	0.0600	ug/L	05.22.18 16.11	E8	1
1,1,2-Trichloro-1,2,2-Trifluoroethane	76-13-1	<0.300	5.00	0.300	ug/L	05.22.18 16.11	E8	1
1,3-Butadiene	106-99-0	<0.276	5.00	0.276	ug/L	05.22.18 16.11	E8	1
Cyclohexane	110-82-7	<0.115	5.00	0.115	ug/L	05.22.18 16.11	E8	1
Dicyclopentadiene	77-73-6	<0.0540	5.00	0.0540	ug/L	05.22.18 16.11	E8	1
Methylcyclohexane	108-87-2	<0.117	5.00	0.117	ug/L	05.22.18 16.11	E8	1
n-Hexane	110-54-3	<0.0920	5.00	0.0920	ug/L	05.22.18 16.11	E8	1
4-Ethyltoluene	622-96-8	Not Present			ug/L	05.22.18 16.11	T4E8	1

Certificate of Analytical Results 585543

AMEC Foster Wheeler, Phoenix, AZ

Cave Creek Landfill - Maricopa

Sample Id: **MW03-723-050818**
Lab Sample Id: 585543-002

Matrix: Water
Date Collected: 05.08.18 11.52

Date Received:05.10.18 14.10

Analytical Method: VOCs by SW 8260B
Tech: MNI
Analyst: MNI
Seq Number: 3050960

Date Prep: 05.22.18 12.55

Prep Method: SW5030C
% Solids:

Parameter	Cas Number	Result	RL	MDL	Units	Analysis Date	Flag	Dil
Propene	115-07-1	Not Present			ug/L	05.22.18 16.11	T4E8	1

Surrogate	% Recovery	Units	Limits	Analysis Date	Flag
4-Bromofluorobenzene	92	%	74-124	05.22.18 16.11	
Dibromofluoromethane	91	%	75-131	05.22.18 16.11	
1,2-Dichloroethane-D4	93	%	63-144	05.22.18 16.11	
Toluene-D8	93	%	80-117	05.22.18 16.11	

Certificate of Analytical Results 585543

AMEC Foster Wheeler, Phoenix, AZ

Cave Creek Landfill - Maricopa

Sample Id: **MW05-704-050918**
Lab Sample Id: 585543-003

Matrix: Water
Date Collected: 05.09.18 13.15

Date Received:05.10.18 14.10

Analytical Method: VOCs by SW 8260B
Tech: MNI
Analyst: MNI
Seq Number: 3050960

Date Prep: 05.22.18 12.55

Prep Method: SW5030C
% Solids:

Parameter	Cas Number	Result	RL	MDL	Units	Analysis Date	Flag	Dil
1,1,1,2-Tetrachloroethane	630-20-6	<0.100	0.500	0.100	ug/L	05.22.18 17.27	E8	1
1,1,1-Trichloroethane	71-55-6	<0.200	0.500	0.200	ug/L	05.22.18 17.27	E8	1
1,1,2,2-Tetrachloroethane	79-34-5	<0.100	0.500	0.100	ug/L	05.22.18 17.27	E8	1
1,1,2-Trichloroethane	79-00-5	<0.0900	0.500	0.0900	ug/L	05.22.18 17.27	E8	1
1,1-Dichloroethane	75-34-3	<0.0700	0.500	0.0700	ug/L	05.22.18 17.27	E8	1
1,1-Dichloroethene	75-35-4	<0.200	0.500	0.200	ug/L	05.22.18 17.27	E8	1
1,1-Dichloropropene	563-58-6	<0.200	1.00	0.200	ug/L	05.22.18 17.27	E8	1
1,2,3-Trichlorobenzene	87-61-6	<0.200	5.00	0.200	ug/L	05.22.18 17.27	E8	1
1,2,3-Trichloropropane	96-18-4	<0.200	1.00	0.200	ug/L	05.22.18 17.27	E8	1
1,2,4-Trichlorobenzene	120-82-1	<0.0700	5.00	0.0700	ug/L	05.22.18 17.27	E8	1
1,2,4-Trimethylbenzene	95-63-6	<0.0700	2.00	0.0700	ug/L	05.22.18 17.27	E8	1
1,2-Dibromo-3-Chloropropane	96-12-8	<0.300	2.00	0.300	ug/L	05.22.18 17.27	L2E8	1
1,2-Dibromoethane	106-93-4	<0.200	0.500	0.200	ug/L	05.22.18 17.27	E8	1
1,2-Dichlorobenzene	95-50-1	<0.0800	1.50	0.0800	ug/L	05.22.18 17.27	E8	1
1,2-Dichloroethane	107-06-2	<0.100	0.500	0.100	ug/L	05.22.18 17.27	E8	1
1,2-Dichloropropane	78-87-5	<0.0900	0.500	0.0900	ug/L	05.22.18 17.27	E8	1
1,3,5-Trimethylbenzene	108-67-8	<0.0700	1.50	0.0700	ug/L	05.22.18 17.27	E8	1
1,3-Dichlorobenzene	541-73-1	<0.0600	1.50	0.0600	ug/L	05.22.18 17.27	E8	1
1,3-Dichloropropane	142-28-9	<0.0700	1.00	0.0700	ug/L	05.22.18 17.27	E8	1
1,4-Dichlorobenzene	106-46-7	<0.200	1.50	0.200	ug/L	05.22.18 17.27	E8	1
2,2-Dichloropropane	594-20-7	<0.200	0.500	0.200	ug/L	05.22.18 17.27	E8	1
2-Butanone	78-93-3	<0.300	5.00	0.300	ug/L	05.22.18 17.27	E8	1
2-Chlorotoluene	95-49-8	<0.0800	1.50	0.0800	ug/L	05.22.18 17.27	E8	1
2-Hexanone	591-78-6	<0.200	5.00	0.200	ug/L	05.22.18 17.27	E8	1
4-Chlorotoluene	106-43-4	<0.0700	2.00	0.0700	ug/L	05.22.18 17.27	E8	1
4-Methyl-2-Pentanone	108-10-1	<0.200	5.00	0.200	ug/L	05.22.18 17.27	E8	1
Acetone	67-64-1	**53.1**	20.0	0.600	ug/L	05.22.18 17.27		1
Benzene	71-43-2	<0.100	0.500	0.100	ug/L	05.22.18 17.27	E8	1
Bromobenzene	108-86-1	<0.0900	1.50	0.0900	ug/L	05.22.18 17.27	E8	1
Bromochloromethane	74-97-5	<0.200	0.500	0.200	ug/L	05.22.18 17.27	E8	1
Bromodichloromethane	75-27-4	<0.0800	0.500	0.0800	ug/L	05.22.18 17.27	E8	1
Bromoform	75-25-2	<0.100	1.00	0.100	ug/L	05.22.18 17.27	E8	1
Bromomethane	74-83-9	<0.300	5.00	0.300	ug/L	05.22.18 17.27	E8	1
Carbon Disulfide	75-15-0	<0.0900	0.500	0.0900	ug/L	05.22.18 17.27	E8	1
Carbon Tetrachloride	56-23-5	<0.200	0.500	0.200	ug/L	05.22.18 17.27	E8	1
Chlorobenzene	108-90-7	<0.0700	0.500	0.0700	ug/L	05.22.18 17.27	E8	1
Chloroethane	75-00-3	<0.600	4.00	0.600	ug/L	05.22.18 17.27	E8	1
Chloroform	67-66-3	<0.0700	0.500	0.0700	ug/L	05.22.18 17.27	E8	1

Certificate of Analytical Results 585543

AMEC Foster Wheeler, Phoenix, AZ

Cave Creek Landfill - Maricopa

Sample Id: **MW05-704-050918**
Lab Sample Id: 585543-003

Matrix: Water
Date Collected: 05.09.18 13.15

Date Received:05.10.18 14.10

Analytical Method: VOCs by SW 8260B
Tech: MNI
Analyst: MNI
Seq Number: 3050960

Date Prep: 05.22.18 12.55

Prep Method: SW5030C
% Solids:

Parameter	Cas Number	Result	RL	MDL	Units	Analysis Date	Flag	Dil
Chloromethane	74-87-3	<0.200	5.00	0.200	ug/L	05.22.18 17.27	E8	1
cis-1,2-Dichloroethene	156-59-2	<0.200	0.500	0.200	ug/L	05.22.18 17.27	E8	1
cis-1,3-Dichloropropene	10061-01-5	<0.0800	1.00	0.0800	ug/L	05.22.18 17.27	E8	1
Dibromochloromethane	124-48-1	<0.0700	0.500	0.0700	ug/L	05.22.18 17.27	E8	1
Dibromomethane	74-95-3	<0.200	0.500	0.200	ug/L	05.22.18 17.27	E8	1
Dichlorodifluoromethane	75-71-8	<0.200	2.00	0.200	ug/L	05.22.18 17.27	L1E8	1
Ethylbenzene	100-41-4	<0.0900	2.00	0.0900	ug/L	05.22.18 17.27	E8	1
Hexachlorobutadiene	87-68-3	<0.200	5.00	0.200	ug/L	05.22.18 17.27	E8	1
Iodomethane (Methyl Iodide)	74-88-4	<0.300	2.00	0.300	ug/L	05.22.18 17.27	E8	1
isopropylbenzene	98-82-8	<0.0800	2.50	0.0800	ug/L	05.22.18 17.27	E8	1
m,p-Xylenes	179601-23-1	<0.0900	2.00	0.0900	ug/L	05.22.18 17.27	E8	1
Methylene Chloride	75-09-2	<0.200	3.00	0.200	ug/L	05.22.18 17.27	E8	1
MTBE	1634-04-4	<0.100	2.00	0.100	ug/L	05.22.18 17.27	E8	1
Naphthalene	91-20-3	<0.200	5.00	0.200	ug/L	05.22.18 17.27	E8	1
n-Butylbenzene	104-51-8	<0.200	2.50	0.200	ug/L	05.22.18 17.27	E8	1
n-Propylbenzene	103-65-1	<0.0800	2.00	0.0800	ug/L	05.22.18 17.27	E8	1
o-Xylene	95-47-6	<0.0900	1.00	0.0900	ug/L	05.22.18 17.27	E8	1
p-Cymene (p-Isopropyltoluene)	99-87-6	<0.100	1.50	0.100	ug/L	05.22.18 17.27	E8	1
Sec-Butylbenzene	135-98-8	<0.100	1.50	0.100	ug/L	05.22.18 17.27	E8	1
Styrene	100-42-5	<0.0800	1.00	0.0800	ug/L	05.22.18 17.27	E8	1
tert-Butylbenzene	98-06-6	<0.200	2.50	0.200	ug/L	05.22.18 17.27	E8	1
Tetrachloroethylene	127-18-4	<0.0800	0.500	0.0800	ug/L	05.22.18 17.27	E8	1
Toluene	108-88-3	<0.0700	2.00	0.0700	ug/L	05.22.18 17.27	E8	1
Total Trihalomethane		<0.0700	0.500	0.0700	ug/L	05.22.18 17.27	E8	1
Total Xylenes	1330-20-7	<0.0900	1.00	0.0900	ug/L	05.22.18 17.27	E8	1
trans-1,2-dichloroethene	156-60-5	<0.0900	0.500	0.0900	ug/L	05.22.18 17.27	E8	1
Trichloroethene	79-01-6	**30.8**	0.500	0.200	ug/L	05.22.18 17.27		1
Trichlorofluoromethane	75-69-4	<0.400	2.00	0.400	ug/L	05.22.18 17.27	N1E8	1
Vinyl Acetate	108-05-4	<0.200	5.00	0.200	ug/L	05.22.18 17.27	E8	1
Vinyl Chloride	75-01-4	<0.100	0.500	0.100	ug/L	05.22.18 17.27	E8	1
trans-1,3-dichloropropene	10061-02-6	<0.0600	0.500	0.0600	ug/L	05.22.18 17.27	E8	1
1,1,2-Trichloro-1,2,2-Trifluoroethane	76-13-1	<0.300	5.00	0.300	ug/L	05.22.18 17.27	E8	1
1,3-Butadiene	106-99-0	<0.276	5.00	0.276	ug/L	05.22.18 17.27	E8	1
Cyclohexane	110-82-7	<0.115	5.00	0.115	ug/L	05.22.18 17.27	E8	1
Dicyclopentadiene	77-73-6	<0.0540	5.00	0.0540	ug/L	05.22.18 17.27	E8	1
Methylcyclohexane	108-87-2	<0.117	5.00	0.117	ug/L	05.22.18 17.27	E8	1
n-Hexane	110-54-3	<0.0920	5.00	0.0920	ug/L	05.22.18 17.27	E8	1
4-Ethyltoluene	622-96-8	Not Present			ug/L	05.22.18 17.27	T4E8	1

Certificate of Analytical Results 585543

AMEC Foster Wheeler, Phoenix, AZ

Cave Creek Landfill - Maricopa

Sample Id: **MW05-704-050918**
Lab Sample Id: 585543-003

Matrix: Water
Date Collected: 05.09.18 13.15

Date Received:05.10.18 14.10

Analytical Method: VOCs by SW 8260B
Tech: MNI
Analyst: MNI
Seq Number: 3050960

Date Prep: 05.22.18 12.55

Prep Method: SW5030C
% Solids:

Parameter	Cas Number	Result	RL	MDL	Units	Analysis Date	Flag	Dil
Propene	115-07-1	Not Present			ug/L	05.22.18 17.27	T4E8	1

Surrogate	% Recovery	Units	Limits	Analysis Date	Flag
4-Bromofluorobenzene	93	%	74-124	05.22.18 17.27	
Dibromofluoromethane	90	%	75-131	05.22.18 17.27	
1,2-Dichloroethane-D4	91	%	63-144	05.22.18 17.27	
Toluene-D8	92	%	80-117	05.22.18 17.27	

Certificate of Analytical Results 585543

AMEC Foster Wheeler, Phoenix, AZ

Cave Creek Landfill - Maricopa

Sample Id: **MW06-720-050818**
Lab Sample Id: 585543-004

Matrix: Water
Date Collected: 05.08.18 10.25

Date Received:05.10.18 14.10

Analytical Method: VOCs by SW 8260B
Tech: MNI
Analyst: MNI
Seq Number: 3050960

Date Prep: 05.22.18 12.55

Prep Method: SW5030C
% Solids:

Parameter	Cas Number	Result	RL	MDL	Units	Analysis Date	Flag	Dil
1,1,1,2-Tetrachloroethane	630-20-6	<0.100	0.500	0.100	ug/L	05.22.18 16.36	E8	1
1,1,1-Trichloroethane	71-55-6	<0.200	0.500	0.200	ug/L	05.22.18 16.36	E8	1
1,1,2,2-Tetrachloroethane	79-34-5	<0.100	0.500	0.100	ug/L	05.22.18 16.36	E8	1
1,1,2-Trichloroethane	79-00-5	<0.0900	0.500	0.0900	ug/L	05.22.18 16.36	E8	1
1,1-Dichloroethane	75-34-3	<0.0700	0.500	0.0700	ug/L	05.22.18 16.36	E8	1
1,1-Dichloroethene	75-35-4	<0.200	0.500	0.200	ug/L	05.22.18 16.36	E8	1
1,1-Dichloropropene	563-58-6	<0.200	1.00	0.200	ug/L	05.22.18 16.36	E8	1
1,2,3-Trichlorobenzene	87-61-6	<0.200	5.00	0.200	ug/L	05.22.18 16.36	E8	1
1,2,3-Trichloropropane	96-18-4	<0.200	1.00	0.200	ug/L	05.22.18 16.36	E8	1
1,2,4-Trichlorobenzene	120-82-1	<0.0700	5.00	0.0700	ug/L	05.22.18 16.36	E8	1
1,2,4-Trimethylbenzene	95-63-6	<0.0700	2.00	0.0700	ug/L	05.22.18 16.36	E8	1
1,2-Dibromo-3-Chloropropane	96-12-8	<0.300	2.00	0.300	ug/L	05.22.18 16.36	L2E8	1
1,2-Dibromoethane	106-93-4	<0.200	0.500	0.200	ug/L	05.22.18 16.36	E8	1
1,2-Dichlorobenzene	95-50-1	<0.0800	1.50	0.0800	ug/L	05.22.18 16.36	E8	1
1,2-Dichloroethane	107-06-2	<0.100	0.500	0.100	ug/L	05.22.18 16.36	E8	1
1,2-Dichloropropane	78-87-5	<0.0900	0.500	0.0900	ug/L	05.22.18 16.36	E8	1
1,3,5-Trimethylbenzene	108-67-8	<0.0700	1.50	0.0700	ug/L	05.22.18 16.36	E8	1
1,3-Dichlorobenzene	541-73-1	<0.0600	1.50	0.0600	ug/L	05.22.18 16.36	E8	1
1,3-Dichloropropane	142-28-9	<0.0700	1.00	0.0700	ug/L	05.22.18 16.36	E8	1
1,4-Dichlorobenzene	106-46-7	<0.200	1.50	0.200	ug/L	05.22.18 16.36	E8	1
2,2-Dichloropropane	594-20-7	<0.200	0.500	0.200	ug/L	05.22.18 16.36	E8	1
2-Butanone	78-93-3	<0.300	5.00	0.300	ug/L	05.22.18 16.36	E8	1
2-Chlorotoluene	95-49-8	<0.0800	1.50	0.0800	ug/L	05.22.18 16.36	E8	1
2-Hexanone	591-78-6	<0.200	5.00	0.200	ug/L	05.22.18 16.36	E8	1
4-Chlorotoluene	106-43-4	<0.0700	2.00	0.0700	ug/L	05.22.18 16.36	E8	1
4-Methyl-2-Pentanone	108-10-1	<0.200	5.00	0.200	ug/L	05.22.18 16.36	E8	1
Acetone	67-64-1	**37.2**	20.0	0.600	ug/L	05.22.18 16.36		1
Benzene	71-43-2	<0.100	0.500	0.100	ug/L	05.22.18 16.36	E8	1
Bromobenzene	108-86-1	<0.0900	1.50	0.0900	ug/L	05.22.18 16.36	E8	1
Bromochloromethane	74-97-5	<0.200	0.500	0.200	ug/L	05.22.18 16.36	E8	1
Bromodichloromethane	75-27-4	<0.0800	0.500	0.0800	ug/L	05.22.18 16.36	E8	1
Bromoform	75-25-2	<0.100	1.00	0.100	ug/L	05.22.18 16.36	E8	1
Bromomethane	74-83-9	<0.300	5.00	0.300	ug/L	05.22.18 16.36	E8	1
Carbon Disulfide	75-15-0	<0.0900	0.500	0.0900	ug/L	05.22.18 16.36	E8	1
Carbon Tetrachloride	56-23-5	<0.200	0.500	0.200	ug/L	05.22.18 16.36	E8	1
Chlorobenzene	108-90-7	<0.0700	0.500	0.0700	ug/L	05.22.18 16.36	E8	1
Chloroethane	75-00-3	<0.600	4.00	0.600	ug/L	05.22.18 16.36	E8	1
Chloroform	67-66-3	<0.0700	0.500	0.0700	ug/L	05.22.18 16.36	E8	1

Certificate of Analytical Results 585543

AMEC Foster Wheeler, Phoenix, AZ

Cave Creek Landfill - Maricopa

Sample Id: **MW06-720-050818**
Lab Sample Id: 585543-004

Matrix: Water
Date Collected: 05.08.18 10.25

Date Received:05.10.18 14.10

Analytical Method: VOCs by SW 8260B
Tech: MNI
Analyst: MNI
Seq Number: 3050960

Date Prep: 05.22.18 12.55

Prep Method: SW5030C
% Solids:

Parameter	Cas Number	Result	RL	MDL	Units	Analysis Date	Flag	Dil
Chloromethane	74-87-3	<0.200	5.00	0.200	ug/L	05.22.18 16.36	E8	1
cis-1,2-Dichloroethene	156-59-2	<0.200	0.500	0.200	ug/L	05.22.18 16.36	E8	1
cis-1,3-Dichloropropene	10061-01-5	<0.0800	1.00	0.0800	ug/L	05.22.18 16.36	E8	1
Dibromochloromethane	124-48-1	<0.0700	0.500	0.0700	ug/L	05.22.18 16.36	E8	1
Dibromomethane	74-95-3	<0.200	0.500	0.200	ug/L	05.22.18 16.36	E8	1
Dichlorodifluoromethane	75-71-8	<0.200	2.00	0.200	ug/L	05.22.18 16.36	L1E8	1
Ethylbenzene	100-41-4	<0.0900	2.00	0.0900	ug/L	05.22.18 16.36	E8	1
Hexachlorobutadiene	87-68-3	<0.200	5.00	0.200	ug/L	05.22.18 16.36	E8	1
Iodomethane (Methyl Iodide)	74-88-4	<0.300	2.00	0.300	ug/L	05.22.18 16.36	E8	1
isopropylbenzene	98-82-8	<0.0800	2.50	0.0800	ug/L	05.22.18 16.36	E8	1
m,p-Xylenes	179601-23-1	<0.0900	2.00	0.0900	ug/L	05.22.18 16.36	E8	1
Methylene Chloride	75-09-2	<0.200	3.00	0.200	ug/L	05.22.18 16.36	E8	1
MTBE	1634-04-4	<0.100	2.00	0.100	ug/L	05.22.18 16.36	E8	1
Naphthalene	91-20-3	<0.200	5.00	0.200	ug/L	05.22.18 16.36	E8	1
n-Butylbenzene	104-51-8	<0.200	2.50	0.200	ug/L	05.22.18 16.36	E8	1
n-Propylbenzene	103-65-1	<0.0800	2.00	0.0800	ug/L	05.22.18 16.36	E8	1
o-Xylene	95-47-6	<0.0900	1.00	0.0900	ug/L	05.22.18 16.36	E8	1
p-Cymene (p-Isopropyltoluene)	99-87-6	<0.100	1.50	0.100	ug/L	05.22.18 16.36	E8	1
Sec-Butylbenzene	135-98-8	<0.100	1.50	0.100	ug/L	05.22.18 16.36	E8	1
Styrene	100-42-5	<0.0800	1.00	0.0800	ug/L	05.22.18 16.36	E8	1
tert-Butylbenzene	98-06-6	<0.200	2.50	0.200	ug/L	05.22.18 16.36	E8	1
Tetrachloroethylene	127-18-4	<0.0800	0.500	0.0800	ug/L	05.22.18 16.36	E8	1
Toluene	108-88-3	<0.0700	2.00	0.0700	ug/L	05.22.18 16.36	E8	1
Total Trihalomethane		<0.0700	0.500	0.0700	ug/L	05.22.18 16.36	E8	1
Total Xylenes	1330-20-7	<0.0900	1.00	0.0900	ug/L	05.22.18 16.36	E8	1
trans-1,2-dichloroethene	156-60-5	<0.0900	0.500	0.0900	ug/L	05.22.18 16.36	E8	1
Trichloroethene	79-01-6	**0.430**	0.500	0.200	ug/L	05.22.18 16.36	E4	1
Trichlorofluoromethane	75-69-4	<0.400	2.00	0.400	ug/L	05.22.18 16.36	N1E8	1
Vinyl Acetate	108-05-4	<0.200	5.00	0.200	ug/L	05.22.18 16.36	E8	1
Vinyl Chloride	75-01-4	<0.100	0.500	0.100	ug/L	05.22.18 16.36	E8	1
trans-1,3-dichloropropene	10061-02-6	<0.0600	0.500	0.0600	ug/L	05.22.18 16.36	E8	1
1,1,2-Trichloro-1,2,2-Trifluoroethane	76-13-1	<0.300	5.00	0.300	ug/L	05.22.18 16.36	E8	1
1,3-Butadiene	106-99-0	<0.276	5.00	0.276	ug/L	05.22.18 16.36	E8	1
Cyclohexane	110-82-7	<0.115	5.00	0.115	ug/L	05.22.18 16.36	E8	1
Dicyclopentadiene	77-73-6	<0.0540	5.00	0.0540	ug/L	05.22.18 16.36	E8	1
Methylcyclohexane	108-87-2	<0.117	5.00	0.117	ug/L	05.22.18 16.36	E8	1
n-Hexane	110-54-3	<0.0920	5.00	0.0920	ug/L	05.22.18 16.36	E8	1
4-Ethyltoluene	622-96-8	Not Present			ug/L	05.22.18 16.36	T4E8	1

Final 1.000

Certificate of Analytical Results 585543

AMEC Foster Wheeler, Phoenix, AZ

Cave Creek Landfill - Maricopa

Sample Id: **MW06-720-050818**
Lab Sample Id: 585543-004

Matrix: Water
Date Collected: 05.08.18 10.25

Date Received:05.10.18 14.10

Analytical Method: VOCs by SW 8260B
Tech: MNI
Analyst: MNI
Seq Number: 3050960

Date Prep: 05.22.18 12.55

Prep Method: SW5030C
% Solids:

Parameter	Cas Number	Result	RL	MDL	Units	Analysis Date	Flag	Dil
Propene	115-07-1	Not Present			ug/L	05.22.18 16.36	T4E8	1

Surrogate	% Recovery	Units	Limits	Analysis Date	Flag
4-Bromofluorobenzene	91	%	74-124	05.22.18 16.36	
Dibromofluoromethane	90	%	75-131	05.22.18 16.36	
1,2-Dichloroethane-D4	89	%	63-144	05.22.18 16.36	
Toluene-D8	91	%	80-117	05.22.18 16.36	

Certificate of Analytical Results 585543

AMEC Foster Wheeler, Phoenix, AZ

Cave Creek Landfill - Maricopa

Sample Id: **MW07-718-050818**
Lab Sample Id: 585543-005

Matrix: Water
Date Collected: 05.08.18 08.47

Date Received:05.10.18 14.10

Analytical Method: VOCs by SW 8260B
Tech: MNI
Analyst: MNI
Seq Number: 3051122

Date Prep: 05.21.18 10.31

Prep Method: SW5030C
% Solids:

Parameter	Cas Number	Result	RL	MDL	Units	Analysis Date	Flag	Dil
1,1,1,2-Tetrachloroethane	630-20-6	<0.500	2.50	0.500	ug/L	05.21.18 18.42	D1E8	5
1,1,1-Trichloroethane	71-55-6	<1.00	2.50	1.00	ug/L	05.21.18 18.42	D1E8	5
1,1,2,2-Tetrachloroethane	79-34-5	<0.500	2.50	0.500	ug/L	05.21.18 18.42	D1E8	5
1,1,2-Trichloroethane	79-00-5	<0.450	2.50	0.450	ug/L	05.21.18 18.42	D1E8	5
1,1-Dichloroethane	75-34-3	<0.350	2.50	0.350	ug/L	05.21.18 18.42	D1E8	5
1,1-Dichloroethene	75-35-4	<1.00	2.50	1.00	ug/L	05.21.18 18.42	D1E8	5
1,1-Dichloropropene	563-58-6	<1.00	5.00	1.00	ug/L	05.21.18 18.42	D1E8	5
1,2,3-Trichlorobenzene	87-61-6	<1.00	25.0	1.00	ug/L	05.21.18 18.42	D1E8	5
1,2,3-Trichloropropane	96-18-4	<1.00	5.00	1.00	ug/L	05.21.18 18.42	D1E8	5
1,2,4-Trichlorobenzene	120-82-1	<0.350	25.0	0.350	ug/L	05.21.18 18.42	D1E8	5
1,2,4-Trimethylbenzene	95-63-6	<0.350	10.0	0.350	ug/L	05.21.18 18.42	D1E8	5
1,2-Dibromo-3-Chloropropane	96-12-8	<1.50	10.0	1.50	ug/L	05.21.18 18.42	D1E8	5
1,2-Dibromoethane	106-93-4	<1.00	2.50	1.00	ug/L	05.21.18 18.42	D1E8	5
1,2-Dichlorobenzene	95-50-1	<0.400	7.50	0.400	ug/L	05.21.18 18.42	D1E8	5
1,2-Dichloroethane	107-06-2	<0.500	2.50	0.500	ug/L	05.21.18 18.42	D1E8	5
1,2-Dichloropropane	78-87-5	<0.450	2.50	0.450	ug/L	05.21.18 18.42	D1E8	5
1,3,5-Trimethylbenzene	108-67-8	<0.350	7.50	0.350	ug/L	05.21.18 18.42	D1E8	5
1,3-Dichlorobenzene	541-73-1	<0.300	7.50	0.300	ug/L	05.21.18 18.42	D1E8	5
1,3-Dichloropropane	142-28-9	<0.350	5.00	0.350	ug/L	05.21.18 18.42	D1E8	5
1,4-Dichlorobenzene	106-46-7	<1.00	7.50	1.00	ug/L	05.21.18 18.42	D1E8	5
2,2-Dichloropropane	594-20-7	<1.00	2.50	1.00	ug/L	05.21.18 18.42	L2E8D1	5
2-Butanone	78-93-3	<1.50	25.0	1.50	ug/L	05.21.18 18.42	D1E8	5
2-Chlorotoluene	95-49-8	<0.400	7.50	0.400	ug/L	05.21.18 18.42	D1E8	5
2-Hexanone	591-78-6	<1.00	25.0	1.00	ug/L	05.21.18 18.42	D1E8	5
4-Chlorotoluene	106-43-4	<0.350	10.0	0.350	ug/L	05.21.18 18.42	D1E8	5
4-Methyl-2-Pentanone	108-10-1	<1.00	25.0	1.00	ug/L	05.21.18 18.42	D1E8	5
Acetone	67-64-1	**71.6**	100	3.00	ug/L	05.21.18 18.42	E4D2	5
Benzene	71-43-2	<0.500	2.50	0.500	ug/L	05.21.18 18.42	D1E8	5
Bromobenzene	108-86-1	<0.450	7.50	0.450	ug/L	05.21.18 18.42	D1E8	5
Bromochloromethane	74-97-5	<1.00	2.50	1.00	ug/L	05.21.18 18.42	D1E8	5
Bromodichloromethane	75-27-4	<0.400	2.50	0.400	ug/L	05.21.18 18.42	D1E8	5
Bromoform	75-25-2	<0.500	5.00	0.500	ug/L	05.21.18 18.42	D1E8	5
Bromomethane	74-83-9	<1.50	25.0	1.50	ug/L	05.21.18 18.42	D1E8	5
Carbon Disulfide	75-15-0	<0.450	2.50	0.450	ug/L	05.21.18 18.42	D1E8	5
Carbon Tetrachloride	56-23-5	<1.00	2.50	1.00	ug/L	05.21.18 18.42	D1E8	5
Chlorobenzene	108-90-7	<0.350	2.50	0.350	ug/L	05.21.18 18.42	D1E8	5
Chloroethane	75-00-3	<3.00	20.0	3.00	ug/L	05.21.18 18.42	D1E8	5
Chloroform	67-66-3	<0.350	2.50	0.350	ug/L	05.21.18 18.42	D1E8	5

Certificate of Analytical Results 585543

AMEC Foster Wheeler, Phoenix, AZ

Cave Creek Landfill - Maricopa

Sample Id: **MW07-718-050818** Matrix: Water Date Received:05.10.18 14.10
Lab Sample Id: 585543-005 Date Collected: 05.08.18 08.47

Analytical Method: VOCs by SW 8260B Prep Method: SW5030C
Tech: MNI % Solids:
Analyst: MNI Date Prep: 05.21.18 10.31
Seq Number: 3051122

Parameter	Cas Number	Result	RL	MDL	Units	Analysis Date	Flag	Dil
Chloromethane	74-87-3	<1.00	25.0	1.00	ug/L	05.21.18 18.42	D1E8	5
cis-1,2-Dichloroethene	156-59-2	<1.00	2.50	1.00	ug/L	05.21.18 18.42	D1E8	5
cis-1,3-Dichloropropene	10061-01-5	<0.400	5.00	0.400	ug/L	05.21.18 18.42	D1E8	5
Dibromochloromethane	124-48-1	<0.350	2.50	0.350	ug/L	05.21.18 18.42	D1E8	5
Dibromomethane	74-95-3	<1.00	2.50	1.00	ug/L	05.21.18 18.42	D1E8	5
Dichlorodifluoromethane	75-71-8	<1.00	10.0	1.00	ug/L	05.21.18 18.42	D1E8	5
Ethylbenzene	100-41-4	<0.450	10.0	0.450	ug/L	05.21.18 18.42	D1E8	5
Hexachlorobutadiene	87-68-3	<1.00	25.0	1.00	ug/L	05.21.18 18.42	D1E8	5
Iodomethane (Methyl Iodide)	74-88-4	<1.50	10.0	1.50	ug/L	05.21.18 18.42	D1E8	5
isopropylbenzene	98-82-8	<0.400	12.5	0.400	ug/L	05.21.18 18.42	D1E8	5
m,p-Xylenes	179601-23-1	<0.450	10.0	0.450	ug/L	05.21.18 18.42	D1E8	5
Methylene Chloride	75-09-2	<1.00	15.0	1.00	ug/L	05.21.18 18.42	D1E8	5
MTBE	1634-04-4	<0.500	10.0	0.500	ug/L	05.21.18 18.42	D1E8	5
Naphthalene	91-20-3	<1.00	25.0	1.00	ug/L	05.21.18 18.42	D1E8	5
n-Butylbenzene	104-51-8	<1.00	12.5	1.00	ug/L	05.21.18 18.42	D1E8	5
n-Propylbenzene	103-65-1	<0.400	10.0	0.400	ug/L	05.21.18 18.42	D1E8	5
o-Xylene	95-47-6	<0.450	5.00	0.450	ug/L	05.21.18 18.42	D1E8	5
p-Cymene (p-Isopropyltoluene)	99-87-6	<0.500	7.50	0.500	ug/L	05.21.18 18.42	D1E8	5
Sec-Butylbenzene	135-98-8	<0.500	7.50	0.500	ug/L	05.21.18 18.42	D1E8	5
Styrene	100-42-5	<0.400	5.00	0.400	ug/L	05.21.18 18.42	D1E8	5
tert-Butylbenzene	98-06-6	<1.00	12.5	1.00	ug/L	05.21.18 18.42	D1E8	5
Tetrachloroethylene	127-18-4	<0.400	2.50	0.400	ug/L	05.21.18 18.42	D1E8	5
Toluene	108-88-3	<0.350	10.0	0.350	ug/L	05.21.18 18.42	D1E8	5
Total Trihalomethane		<0.350	2.50	0.350	ug/L	05.21.18 18.42	D1E8	5
Total Xylenes	1330-20-7	<0.450	5.00	0.450	ug/L	05.21.18 18.42	D1E8	5
trans-1,2-dichloroethene	156-60-5	<0.450	2.50	0.450	ug/L	05.21.18 18.42	D1E8	5
Trichloroethene	79-01-6	**31.2**	2.50	1.00	ug/L	05.21.18 18.42	D2	5
Trichlorofluoromethane	75-69-4	<2.00	10.0	2.00	ug/L	05.21.18 18.42	D1E8	5
Vinyl Acetate	108-05-4	<1.00	25.0	1.00	ug/L	05.21.18 18.42	D1E8	5
Vinyl Chloride	75-01-4	<0.500	2.50	0.500	ug/L	05.21.18 18.42	D1E8	5
trans-1,3-dichloropropene	10061-02-6	<0.300	2.50	0.300	ug/L	05.21.18 18.42	D1E8	5
1,1,2-Trichloro-1,2,2-Trifluoroethane	76-13-1	<1.50	25.0	1.50	ug/L	05.21.18 18.42	D1E8	5
1,3-Butadiene	106-99-0	<1.38	25.0	1.38	ug/L	05.21.18 18.42	D1E8	5
Cyclohexane	110-82-7	<0.575	25.0	0.575	ug/L	05.21.18 18.42	D1E8	5
Dicyclopentadiene	77-73-6	<0.270	25.0	0.270	ug/L	05.21.18 18.42	D1E8	5
Methylcyclohexane	108-87-2	<0.585	25.0	0.585	ug/L	05.21.18 18.42	D1E8	5
n-Hexane	110-54-3	<0.460	25.0	0.460	ug/L	05.21.18 18.42	D1E8	5
4-Ethyltoluene	622-96-8	Not Present			ug/L	05.21.18 18.42	T4E8	5

Certificate of Analytical Results 585543

AMEC Foster Wheeler, Phoenix, AZ

Cave Creek Landfill - Maricopa

Sample Id: **MW07-718-050818**
Lab Sample Id: 585543-005

Matrix: Water
Date Collected: 05.08.18 08.47

Date Received: 05.10.18 14.10

Analytical Method: VOCs by SW 8260B
Tech: MNI
Analyst: MNI
Seq Number: 3051122

Date Prep: 05.21.18 10.31

Prep Method: SW5030C
% Solids:

Parameter	Cas Number	Result	RL	MDL	Units	Analysis Date	Flag	Dil
Propene	115-07-1	Not Present			ug/L	05.21.18 18.42	T4E8	5

Surrogate	% Recovery	Units	Limits	Analysis Date	Flag
4-Bromofluorobenzene	98	%	74-124	05.21.18 18.42	
Dibromofluoromethane	105	%	75-131	05.21.18 18.42	
1,2-Dichloroethane-D4	106	%	63-144	05.21.18 18.42	
Toluene-D8	102	%	80-117	05.21.18 18.42	

Certificate of Analytical Results 585543

AMEC Foster Wheeler, Phoenix, AZ

Cave Creek Landfill - Maricopa

Sample Id: **MW08-741-050718** Matrix: Water Date Received:05.10.18 14.10
Lab Sample Id: 585543-006 Date Collected: 05.07.18 10.50

Analytical Method: VOCs by SW 8260B Prep Method: SW5030C
Tech: MNI % Solids:
Analyst: MNI Date Prep: 05.21.18 10.31
Seq Number: 3051122

Parameter	Cas Number	Result	RL	MDL	Units	Analysis Date	Flag	Dil
1,1,1,2-Tetrachloroethane	630-20-6	<1.00	5.00	1.00	ug/L	05.21.18 13.58	D1E8	10
1,1,1-Trichloroethane	71-55-6	<2.00	5.00	2.00	ug/L	05.21.18 13.58	D1E8	10
1,1,2,2-Tetrachloroethane	79-34-5	<1.00	5.00	1.00	ug/L	05.21.18 13.58	D1E8	10
1,1,2-Trichloroethane	79-00-5	<0.900	5.00	0.900	ug/L	05.21.18 13.58	D1E8	10
1,1-Dichloroethane	75-34-3	<0.700	5.00	0.700	ug/L	05.21.18 13.58	D1E8	10
1,1-Dichloroethene	75-35-4	<2.00	5.00	2.00	ug/L	05.21.18 13.58	D1E8	10
1,1-Dichloropropene	563-58-6	<2.00	10.0	2.00	ug/L	05.21.18 13.58	D1E8	10
1,2,3-Trichlorobenzene	87-61-6	<2.00	50.0	2.00	ug/L	05.21.18 13.58	D1E8	10
1,2,3-Trichloropropane	96-18-4	<2.00	10.0	2.00	ug/L	05.21.18 13.58	D1E8	10
1,2,4-Trichlorobenzene	120-82-1	<0.700	50.0	0.700	ug/L	05.21.18 13.58	D1E8	10
1,2,4-Trimethylbenzene	95-63-6	<0.700	20.0	0.700	ug/L	05.21.18 13.58	D1E8	10
1,2-Dibromo-3-Chloropropane	96-12-8	<3.00	20.0	3.00	ug/L	05.21.18 13.58	D1E8	10
1,2-Dibromoethane	106-93-4	<2.00	5.00	2.00	ug/L	05.21.18 13.58	D1E8	10
1,2-Dichlorobenzene	95-50-1	<0.800	15.0	0.800	ug/L	05.21.18 13.58	D1E8	10
1,2-Dichloroethane	107-06-2	<1.00	5.00	1.00	ug/L	05.21.18 13.58	D1E8	10
1,2-Dichloropropane	78-87-5	<0.900	5.00	0.900	ug/L	05.21.18 13.58	D1E8	10
1,3,5-Trimethylbenzene	108-67-8	<0.700	15.0	0.700	ug/L	05.21.18 13.58	D1E8	10
1,3-Dichlorobenzene	541-73-1	<0.600	15.0	0.600	ug/L	05.21.18 13.58	D1E8	10
1,3-Dichloropropane	142-28-9	<0.700	10.0	0.700	ug/L	05.21.18 13.58	D1E8	10
1,4-Dichlorobenzene	106-46-7	<2.00	15.0	2.00	ug/L	05.21.18 13.58	D1E8	10
2,2-Dichloropropane	594-20-7	<2.00	5.00	2.00	ug/L	05.21.18 13.58	L2E8D1	10
2-Butanone	78-93-3	<3.00	50.0	3.00	ug/L	05.21.18 13.58	D1E8	10
2-Chlorotoluene	95-49-8	<0.800	15.0	0.800	ug/L	05.21.18 13.58	D1E8	10
2-Hexanone	591-78-6	<2.00	50.0	2.00	ug/L	05.21.18 13.58	D1E8	10
4-Chlorotoluene	106-43-4	<0.700	20.0	0.700	ug/L	05.21.18 13.58	D1E8	10
4-Methyl-2-Pentanone	108-10-1	<2.00	50.0	2.00	ug/L	05.21.18 13.58	D1E8	10
Acetone	67-64-1	**106**	200	6.00	ug/L	05.21.18 13.58	E4D2	10
Benzene	71-43-2	<1.00	5.00	1.00	ug/L	05.21.18 13.58	D1E8	10
Bromobenzene	108-86-1	<0.900	15.0	0.900	ug/L	05.21.18 13.58	D1E8	10
Bromochloromethane	74-97-5	<2.00	5.00	2.00	ug/L	05.21.18 13.58	D1E8	10
Bromodichloromethane	75-27-4	<0.800	5.00	0.800	ug/L	05.21.18 13.58	D1E8	10
Bromoform	75-25-2	<1.00	10.0	1.00	ug/L	05.21.18 13.58	D1E8	10
Bromomethane	74-83-9	<3.00	50.0	3.00	ug/L	05.21.18 13.58	D1E8	10
Carbon Disulfide	75-15-0	<0.900	5.00	0.900	ug/L	05.21.18 13.58	D1E8	10
Carbon Tetrachloride	56-23-5	<2.00	5.00	2.00	ug/L	05.21.18 13.58	D1E8	10
Chlorobenzene	108-90-7	<0.700	5.00	0.700	ug/L	05.21.18 13.58	D1E8	10
Chloroethane	75-00-3	<6.00	40.0	6.00	ug/L	05.21.18 13.58	D1E8	10
Chloroform	67-66-3	<0.700	5.00	0.700	ug/L	05.21.18 13.58	D1E8	10

Certificate of Analytical Results 585543

AMEC Foster Wheeler, Phoenix, AZ

Cave Creek Landfill - Maricopa

Sample Id: **MW08-741-050718**
Lab Sample Id: 585543-006

Matrix: Water
Date Collected: 05.07.18 10.50

Date Received:05.10.18 14.10

Analytical Method: VOCs by SW 8260B
Tech: MNI
Analyst: MNI
Seq Number: 3051122

Date Prep: 05.21.18 10.31

Prep Method: SW5030C
% Solids:

Parameter	Cas Number	Result	RL	MDL	Units	Analysis Date	Flag	Dil
Chloromethane	74-87-3	<2.00	50.0	2.00	ug/L	05.21.18 13.58	D1E8	10
cis-1,2-Dichloroethene	156-59-2	<2.00	5.00	2.00	ug/L	05.21.18 13.58	D1E8	10
cis-1,3-Dichloropropene	10061-01-5	<0.800	10.0	0.800	ug/L	05.21.18 13.58	D1E8	10
Dibromochloromethane	124-48-1	<0.700	5.00	0.700	ug/L	05.21.18 13.58	D1E8	10
Dibromomethane	74-95-3	<2.00	5.00	2.00	ug/L	05.21.18 13.58	D1E8	10
Dichlorodifluoromethane	75-71-8	<2.00	20.0	2.00	ug/L	05.21.18 13.58	D1E8	10
Ethylbenzene	100-41-4	<0.900	20.0	0.900	ug/L	05.21.18 13.58	D1E8	10
Hexachlorobutadiene	87-68-3	<2.00	50.0	2.00	ug/L	05.21.18 13.58	D1E8	10
Iodomethane (Methyl Iodide)	74-88-4	<3.00	20.0	3.00	ug/L	05.21.18 13.58	D1E8	10
isopropylbenzene	98-82-8	<0.800	25.0	0.800	ug/L	05.21.18 13.58	D1E8	10
m,p-Xylenes	179601-23-1	<0.900	20.0	0.900	ug/L	05.21.18 13.58	D1E8	10
Methylene Chloride	75-09-2	<2.00	30.0	2.00	ug/L	05.21.18 13.58	D1E8	10
MTBE	1634-04-4	<1.00	20.0	1.00	ug/L	05.21.18 13.58	D1E8	10
Naphthalene	91-20-3	<2.00	50.0	2.00	ug/L	05.21.18 13.58	D1E8	10
n-Butylbenzene	104-51-8	<2.00	25.0	2.00	ug/L	05.21.18 13.58	D1E8	10
n-Propylbenzene	103-65-1	<0.800	20.0	0.800	ug/L	05.21.18 13.58	D1E8	10
o-Xylene	95-47-6	<0.900	10.0	0.900	ug/L	05.21.18 13.58	D1E8	10
p-Cymene (p-Isopropyltoluene)	99-87-6	<1.00	15.0	1.00	ug/L	05.21.18 13.58	D1E8	10
Sec-Butylbenzene	135-98-8	<1.00	15.0	1.00	ug/L	05.21.18 13.58	D1E8	10
Styrene	100-42-5	<0.800	10.0	0.800	ug/L	05.21.18 13.58	D1E8	10
tert-Butylbenzene	98-06-6	<2.00	25.0	2.00	ug/L	05.21.18 13.58	D1E8	10
Tetrachloroethylene	127-18-4	<0.800	5.00	0.800	ug/L	05.21.18 13.58	D1E8	10
Toluene	108-88-3	<0.700	20.0	0.700	ug/L	05.21.18 13.58	D1E8	10
Total Trihalomethane		<0.700	5.00	0.700	ug/L	05.21.18 13.58	D1E8	10
Total Xylenes	1330-20-7	<0.900	10.0	0.900	ug/L	05.21.18 13.58	D1E8	10
trans-1,2-dichloroethene	156-60-5	<0.900	5.00	0.900	ug/L	05.21.18 13.58	D1E8	10
Trichloroethene	79-01-6	**152**	5.00	2.00	ug/L	05.21.18 13.58	D2	10
Trichlorofluoromethane	75-69-4	<4.00	20.0	4.00	ug/L	05.21.18 13.58	D1E8	10
Vinyl Acetate	108-05-4	<2.00	50.0	2.00	ug/L	05.21.18 13.58	D1E8	10
Vinyl Chloride	75-01-4	<1.00	5.00	1.00	ug/L	05.21.18 13.58	D1E8	10
trans-1,3-dichloropropene	10061-02-6	<0.600	5.00	0.600	ug/L	05.21.18 13.58	D1E8	10
1,1,2-Trichloro-1,2,2-Trifluoroethane	76-13-1	<3.00	50.0	3.00	ug/L	05.21.18 13.58	D1E8	10
1,3-Butadiene	106-99-0	<2.76	50.0	2.76	ug/L	05.21.18 13.58	D1E8	10
Cyclohexane	110-82-7	<1.15	50.0	1.15	ug/L	05.21.18 13.58	D1E8	10
Dicyclopentadiene	77-73-6	<0.540	50.0	0.540	ug/L	05.21.18 13.58	D1E8	10
Methylcyclohexane	108-87-2	<1.17	50.0	1.17	ug/L	05.21.18 13.58	D1E8	10
n-Hexane	110-54-3	<0.920	50.0	0.920	ug/L	05.21.18 13.58	D1E8	10
4-Ethyltoluene	622-96-8	Not Present			ug/L	05.21.18 13.58	T4E8	10

Final 1.000

Certificate of Analytical Results 585543

AMEC Foster Wheeler, Phoenix, AZ

Cave Creek Landfill - Maricopa

Sample Id: **MW08-741-050718**
Lab Sample Id: 585543-006

Matrix: Water
Date Collected: 05.07.18 10.50

Date Received: 05.10.18 14.10

Analytical Method: VOCs by SW 8260B
Tech: MNI
Analyst: MNI
Seq Number: 3051122

Date Prep: 05.21.18 10.31

Prep Method: SW5030C
% Solids:

Parameter	Cas Number	Result	RL	MDL	Units	Analysis Date	Flag	Dil
Propene	115-07-1	Not Present			ug/L	05.21.18 13.58	T4E8	10

Surrogate	% Recovery	Units	Limits	Analysis Date	Flag
4-Bromofluorobenzene	96	%	74-124	05.21.18 13.58	
Dibromofluoromethane	101	%	75-131	05.21.18 13.58	
1,2-Dichloroethane-D4	110	%	63-144	05.21.18 13.58	
Toluene-D8	102	%	80-117	05.21.18 13.58	

Certificate of Analytical Results 585543

AMEC Foster Wheeler, Phoenix, AZ

Cave Creek Landfill - Maricopa

Sample Id: **PW-734-051018**
Lab Sample Id: 585543-007

Matrix: Water
Date Collected: 05.10.18 07.20

Date Received:05.10.18 14.10

Analytical Method: VOCs by SW 8260B
Tech: MNI
Analyst: MNI
Seq Number: 3050960

Date Prep: 05.22.18 12.55

Prep Method: SW5030C
% Solids:

Parameter	Cas Number	Result	RL	MDL	Units	Analysis Date	Flag	Dil
1,1,1,2-Tetrachloroethane	630-20-6	<0.100	0.500	0.100	ug/L	05.22.18 17.52	E8	1
1,1,1-Trichloroethane	71-55-6	<0.200	0.500	0.200	ug/L	05.22.18 17.52	E8	1
1,1,2,2-Tetrachloroethane	79-34-5	<0.100	0.500	0.100	ug/L	05.22.18 17.52	E8	1
1,1,2-Trichloroethane	79-00-5	<0.0900	0.500	0.0900	ug/L	05.22.18 17.52	E8	1
1,1-Dichloroethane	75-34-3	<0.0700	0.500	0.0700	ug/L	05.22.18 17.52	E8	1
1,1-Dichloroethene	75-35-4	<0.200	0.500	0.200	ug/L	05.22.18 17.52	E8	1
1,1-Dichloropropene	563-58-6	<0.200	1.00	0.200	ug/L	05.22.18 17.52	E8	1
1,2,3-Trichlorobenzene	87-61-6	<0.200	5.00	0.200	ug/L	05.22.18 17.52	E8	1
1,2,3-Trichloropropane	96-18-4	<0.200	1.00	0.200	ug/L	05.22.18 17.52	E8	1
1,2,4-Trichlorobenzene	120-82-1	<0.0700	5.00	0.0700	ug/L	05.22.18 17.52	E8	1
1,2,4-Trimethylbenzene	95-63-6	<0.0700	2.00	0.0700	ug/L	05.22.18 17.52	E8	1
1,2-Dibromo-3-Chloropropane	96-12-8	<0.300	2.00	0.300	ug/L	05.22.18 17.52	L2E8	1
1,2-Dibromoethane	106-93-4	<0.200	0.500	0.200	ug/L	05.22.18 17.52	E8	1
1,2-Dichlorobenzene	95-50-1	<0.0800	1.50	0.0800	ug/L	05.22.18 17.52	E8	1
1,2-Dichloroethane	107-06-2	<0.100	0.500	0.100	ug/L	05.22.18 17.52	E8	1
1,2-Dichloropropane	78-87-5	<0.0900	0.500	0.0900	ug/L	05.22.18 17.52	E8	1
1,3,5-Trimethylbenzene	108-67-8	<0.0700	1.50	0.0700	ug/L	05.22.18 17.52	E8	1
1,3-Dichlorobenzene	541-73-1	<0.0600	1.50	0.0600	ug/L	05.22.18 17.52	E8	1
1,3-Dichloropropane	142-28-9	<0.0700	1.00	0.0700	ug/L	05.22.18 17.52	E8	1
1,4-Dichlorobenzene	106-46-7	<0.200	1.50	0.200	ug/L	05.22.18 17.52	E8	1
2,2-Dichloropropane	594-20-7	<0.200	0.500	0.200	ug/L	05.22.18 17.52	E8	1
2-Butanone	78-93-3	<0.300	5.00	0.300	ug/L	05.22.18 17.52	E8	1
2-Chlorotoluene	95-49-8	<0.0800	1.50	0.0800	ug/L	05.22.18 17.52	E8	1
2-Hexanone	591-78-6	<0.200	5.00	0.200	ug/L	05.22.18 17.52	E8	1
4-Chlorotoluene	106-43-4	<0.0700	2.00	0.0700	ug/L	05.22.18 17.52	E8	1
4-Methyl-2-Pentanone	108-10-1	<0.200	5.00	0.200	ug/L	05.22.18 17.52	M2E8	1
Acetone	67-64-1	**61.9**	20.0	0.600	ug/L	05.22.18 17.52		1
Benzene	71-43-2	<0.100	0.500	0.100	ug/L	05.22.18 17.52	E8	1
Bromobenzene	108-86-1	<0.0900	1.50	0.0900	ug/L	05.22.18 17.52	E8	1
Bromochloromethane	74-97-5	<0.200	0.500	0.200	ug/L	05.22.18 17.52	E8	1
Bromodichloromethane	75-27-4	<0.0800	0.500	0.0800	ug/L	05.22.18 17.52	E8	1
Bromoform	75-25-2	<0.100	1.00	0.100	ug/L	05.22.18 17.52	E8	1
Bromomethane	74-83-9	<0.300	5.00	0.300	ug/L	05.22.18 17.52	E8	1
Carbon Disulfide	75-15-0	<0.0900	0.500	0.0900	ug/L	05.22.18 17.52	E8	1
Carbon Tetrachloride	56-23-5	<0.200	0.500	0.200	ug/L	05.22.18 17.52	E8	1
Chlorobenzene	108-90-7	<0.0700	0.500	0.0700	ug/L	05.22.18 17.52	E8	1
Chloroethane	75-00-3	<0.600	4.00	0.600	ug/L	05.22.18 17.52	E8	1
Chloroform	67-66-3	<0.0700	0.500	0.0700	ug/L	05.22.18 17.52	E8	1

Certificate of Analytical Results 585543

AMEC Foster Wheeler, Phoenix, AZ

Cave Creek Landfill - Maricopa

Sample Id: **PW-734-051018** Matrix: Water Date Received:05.10.18 14.10
Lab Sample Id: 585543-007 Date Collected: 05.10.18 07.20

Analytical Method: VOCs by SW 8260B Prep Method: SW5030C
Tech: MNI % Solids:
Analyst: MNI Date Prep: 05.22.18 12.55
Seq Number: 3050960

Parameter	Cas Number	Result	RL	MDL	Units	Analysis Date	Flag	Dil
Chloromethane	74-87-3	<0.200	5.00	0.200	ug/L	05.22.18 17.52	E8	1
cis-1,2-Dichloroethene	156-59-2	<0.200	0.500	0.200	ug/L	05.22.18 17.52	E8	1
cis-1,3-Dichloropropene	10061-01-5	<0.0800	1.00	0.0800	ug/L	05.22.18 17.52	E8	1
Dibromochloromethane	124-48-1	<0.0700	0.500	0.0700	ug/L	05.22.18 17.52	E8	1
Dibromomethane	74-95-3	<0.200	0.500	0.200	ug/L	05.22.18 17.52	E8	1
Dichlorodifluoromethane	75-71-8	<0.200	2.00	0.200	ug/L	05.22.18 17.52	L1E8	1
Ethylbenzene	100-41-4	<0.0900	2.00	0.0900	ug/L	05.22.18 17.52	E8	1
Hexachlorobutadiene	87-68-3	<0.200	5.00	0.200	ug/L	05.22.18 17.52	E8	1
Iodomethane (Methyl Iodide)	74-88-4	<0.300	2.00	0.300	ug/L	05.22.18 17.52	E8	1
isopropylbenzene	98-82-8	<0.0800	2.50	0.0800	ug/L	05.22.18 17.52	E8	1
m,p-Xylenes	179601-23-1	<0.0900	2.00	0.0900	ug/L	05.22.18 17.52	E8	1
Methylene Chloride	75-09-2	<0.200	3.00	0.200	ug/L	05.22.18 17.52	E8	1
MTBE	1634-04-4	<0.100	2.00	0.100	ug/L	05.22.18 17.52	E8	1
Naphthalene	91-20-3	<0.200	5.00	0.200	ug/L	05.22.18 17.52	E8	1
n-Butylbenzene	104-51-8	<0.200	2.50	0.200	ug/L	05.22.18 17.52	E8	1
n-Propylbenzene	103-65-1	<0.0800	2.00	0.0800	ug/L	05.22.18 17.52	E8	1
o-Xylene	95-47-6	<0.0900	1.00	0.0900	ug/L	05.22.18 17.52	E8	1
p-Cymene (p-Isopropyltoluene)	99-87-6	<0.100	1.50	0.100	ug/L	05.22.18 17.52	E8	1
Sec-Butylbenzene	135-98-8	<0.100	1.50	0.100	ug/L	05.22.18 17.52	E8	1
Styrene	100-42-5	<0.0800	1.00	0.0800	ug/L	05.22.18 17.52	E8	1
tert-Butylbenzene	98-06-6	<0.200	2.50	0.200	ug/L	05.22.18 17.52	E8	1
Tetrachloroethylene	127-18-4	<0.0800	0.500	0.0800	ug/L	05.22.18 17.52	E8	1
Toluene	108-88-3	<0.0700	2.00	0.0700	ug/L	05.22.18 17.52	E8	1
Total Trihalomethane		<0.0700	0.500	0.0700	ug/L	05.22.18 17.52	E8	1
Total Xylenes	1330-20-7	<0.0900	1.00	0.0900	ug/L	05.22.18 17.52	E8	1
trans-1,2-dichloroethene	156-60-5	<0.0900	0.500	0.0900	ug/L	05.22.18 17.52	E8	1
Trichloroethene	79-01-6	**16.5**	0.500	0.200	ug/L	05.22.18 17.52		1
Trichlorofluoromethane	75-69-4	<0.400	2.00	0.400	ug/L	05.22.18 17.52	N1E8	1
Vinyl Acetate	108-05-4	<0.200	5.00	0.200	ug/L	05.22.18 17.52	E8	1
Vinyl Chloride	75-01-4	<0.100	0.500	0.100	ug/L	05.22.18 17.52	E8	1
trans-1,3-dichloropropene	10061-02-6	<0.0600	0.500	0.0600	ug/L	05.22.18 17.52	E8	1
1,1,2-Trichloro-1,2,2-Trifluoroethane	76-13-1	<0.300	5.00	0.300	ug/L	05.22.18 17.52	E8	1
1,3-Butadiene	106-99-0	<0.276	5.00	0.276	ug/L	05.22.18 17.52	E8	1
Cyclohexane	110-82-7	<0.115	5.00	0.115	ug/L	05.22.18 17.52	E8	1
Dicyclopentadiene	77-73-6	<0.0540	5.00	0.0540	ug/L	05.22.18 17.52	E8	1
Methylcyclohexane	108-87-2	<0.117	5.00	0.117	ug/L	05.22.18 17.52	E8	1
n-Hexane	110-54-3	<0.0920	5.00	0.0920	ug/L	05.22.18 17.52	E8	1
4-Ethyltoluene	622-96-8	Not Present			ug/L	05.22.18 17.52	T4E8	1

Certificate of Analytical Results 585543

AMEC Foster Wheeler, Phoenix, AZ

Cave Creek Landfill - Maricopa

Sample Id: **PW-734-051018**
Lab Sample Id: 585543-007

Matrix: Water
Date Collected: 05.10.18 07.20

Date Received:05.10.18 14.10

Analytical Method: VOCs by SW 8260B
Tech: MNI
Analyst: MNI
Seq Number: 3050960

Date Prep: 05.22.18 12.55

Prep Method: SW5030C
% Solids:

Parameter	Cas Number	Result	RL	MDL	Units	Analysis Date	Flag	Dil
Propene	115-07-1	Not Present			ug/L	05.22.18 17.52	T4E8	1

Surrogate	% Recovery	Units	Limits	Analysis Date	Flag
4-Bromofluorobenzene	93	%	74-124	05.22.18 17.52	
Dibromofluoromethane	94	%	75-131	05.22.18 17.52	
1,2-Dichloroethane-D4	95	%	63-144	05.22.18 17.52	
Toluene-D8	93	%	80-117	05.22.18 17.52	

Certificate of Analytical Results 585543

AMEC Foster Wheeler, Phoenix, AZ

Cave Creek Landfill - Maricopa

Sample Id: **TSSV02-732-050918**
Lab Sample Id: 585543-008

Matrix: Water
Date Collected: 05.09.18 11.36

Date Received:05.10.18 14.10

Analytical Method: VOCs by SW 8260B
Tech: MNI
Analyst: MNI
Seq Number: 3050960

Date Prep: 05.22.18 12.55

Prep Method: SW5030C
% Solids:

Parameter	Cas Number	Result	RL	MDL	Units	Analysis Date	Flag	Dil
1,1,1,2-Tetrachloroethane	630-20-6	<0.100	0.500	0.100	ug/L	05.22.18 18.18	E8	1
1,1,1-Trichloroethane	71-55-6	<0.200	0.500	0.200	ug/L	05.22.18 18.18	E8	1
1,1,2,2-Tetrachloroethane	79-34-5	<0.100	0.500	0.100	ug/L	05.22.18 18.18	E8	1
1,1,2-Trichloroethane	79-00-5	<0.0900	0.500	0.0900	ug/L	05.22.18 18.18	E8	1
1,1-Dichloroethane	75-34-3	<0.0700	0.500	0.0700	ug/L	05.22.18 18.18	E8	1
1,1-Dichloroethene	75-35-4	<0.200	0.500	0.200	ug/L	05.22.18 18.18	E8	1
1,1-Dichloropropene	563-58-6	<0.200	1.00	0.200	ug/L	05.22.18 18.18	E8	1
1,2,3-Trichlorobenzene	87-61-6	<0.200	5.00	0.200	ug/L	05.22.18 18.18	E8	1
1,2,3-Trichloropropane	96-18-4	<0.200	1.00	0.200	ug/L	05.22.18 18.18	E8	1
1,2,4-Trichlorobenzene	120-82-1	<0.0700	5.00	0.0700	ug/L	05.22.18 18.18	E8	1
1,2,4-Trimethylbenzene	95-63-6	<0.0700	2.00	0.0700	ug/L	05.22.18 18.18	E8	1
1,2-Dibromo-3-Chloropropane	96-12-8	<0.300	2.00	0.300	ug/L	05.22.18 18.18	L2E8	1
1,2-Dibromoethane	106-93-4	<0.200	0.500	0.200	ug/L	05.22.18 18.18	E8	1
1,2-Dichlorobenzene	95-50-1	<0.0800	1.50	0.0800	ug/L	05.22.18 18.18	E8	1
1,2-Dichloroethane	107-06-2	<0.100	0.500	0.100	ug/L	05.22.18 18.18	E8	1
1,2-Dichloropropane	78-87-5	<0.0900	0.500	0.0900	ug/L	05.22.18 18.18	E8	1
1,3,5-Trimethylbenzene	108-67-8	<0.0700	1.50	0.0700	ug/L	05.22.18 18.18	E8	1
1,3-Dichlorobenzene	541-73-1	<0.0600	1.50	0.0600	ug/L	05.22.18 18.18	E8	1
1,3-Dichloropropane	142-28-9	<0.0700	1.00	0.0700	ug/L	05.22.18 18.18	E8	1
1,4-Dichlorobenzene	106-46-7	<0.200	1.50	0.200	ug/L	05.22.18 18.18	E8	1
2,2-Dichloropropane	594-20-7	<0.200	0.500	0.200	ug/L	05.22.18 18.18	E8	1
2-Butanone	78-93-3	<0.300	5.00	0.300	ug/L	05.22.18 18.18	E8	1
2-Chlorotoluene	95-49-8	<0.0800	1.50	0.0800	ug/L	05.22.18 18.18	E8	1
2-Hexanone	591-78-6	<0.200	5.00	0.200	ug/L	05.22.18 18.18	E8	1
4-Chlorotoluene	106-43-4	<0.0700	2.00	0.0700	ug/L	05.22.18 18.18	E8	1
4-Methyl-2-Pentanone	108-10-1	<0.200	5.00	0.200	ug/L	05.22.18 18.18	E8	1
Acetone	67-64-1	**45.0**	20.0	0.600	ug/L	05.22.18 18.18		1
Benzene	71-43-2	<0.100	0.500	0.100	ug/L	05.22.18 18.18	E8	1
Bromobenzene	108-86-1	<0.0900	1.50	0.0900	ug/L	05.22.18 18.18	E8	1
Bromochloromethane	74-97-5	<0.200	0.500	0.200	ug/L	05.22.18 18.18	E8	1
Bromodichloromethane	75-27-4	<0.0800	0.500	0.0800	ug/L	05.22.18 18.18	E8	1
Bromoform	75-25-2	<0.100	1.00	0.100	ug/L	05.22.18 18.18	E8	1
Bromomethane	74-83-9	<0.300	5.00	0.300	ug/L	05.22.18 18.18	E8	1
Carbon Disulfide	75-15-0	<0.0900	0.500	0.0900	ug/L	05.22.18 18.18	E8	1
Carbon Tetrachloride	56-23-5	<0.200	0.500	0.200	ug/L	05.22.18 18.18	E8	1
Chlorobenzene	108-90-7	<0.0700	0.500	0.0700	ug/L	05.22.18 18.18	E8	1
Chloroethane	75-00-3	<0.600	4.00	0.600	ug/L	05.22.18 18.18	E8	1
Chloroform	67-66-3	<0.0700	0.500	0.0700	ug/L	05.22.18 18.18	E8	1

Certificate of Analytical Results 585543

AMEC Foster Wheeler, Phoenix, AZ

Cave Creek Landfill - Maricopa

Sample Id: **TSSV02-732-050918** Matrix: Water Date Received:05.10.18 14.10
Lab Sample Id: 585543-008 Date Collected: 05.09.18 11.36

Analytical Method: VOCs by SW 8260B Prep Method: SW5030C
Tech: MNI % Solids:
Analyst: MNI Date Prep: 05.22.18 12.55
Seq Number: 3050960

Parameter	Cas Number	Result	RL	MDL	Units	Analysis Date	Flag	Dil
Chloromethane	74-87-3	<0.200	5.00	0.200	ug/L	05.22.18 18.18	E8	1
cis-1,2-Dichloroethene	156-59-2	<0.200	0.500	0.200	ug/L	05.22.18 18.18	E8	1
cis-1,3-Dichloropropene	10061-01-5	<0.0800	1.00	0.0800	ug/L	05.22.18 18.18	E8	1
Dibromochloromethane	124-48-1	<0.0700	0.500	0.0700	ug/L	05.22.18 18.18	E8	1
Dibromomethane	74-95-3	<0.200	0.500	0.200	ug/L	05.22.18 18.18	E8	1
Dichlorodifluoromethane	75-71-8	<0.200	2.00	0.200	ug/L	05.22.18 18.18	L1E8	1
Ethylbenzene	100-41-4	<0.0900	2.00	0.0900	ug/L	05.22.18 18.18	E8	1
Hexachlorobutadiene	87-68-3	<0.200	5.00	0.200	ug/L	05.22.18 18.18	E8	1
Iodomethane (Methyl Iodide)	74-88-4	<0.300	2.00	0.300	ug/L	05.22.18 18.18	E8	1
isopropylbenzene	98-82-8	<0.0800	2.50	0.0800	ug/L	05.22.18 18.18	E8	1
m,p-Xylenes	179601-23-1	<0.0900	2.00	0.0900	ug/L	05.22.18 18.18	E8	1
Methylene Chloride	75-09-2	<0.200	3.00	0.200	ug/L	05.22.18 18.18	E8	1
MTBE	1634-04-4	<0.100	2.00	0.100	ug/L	05.22.18 18.18	E8	1
Naphthalene	91-20-3	<0.200	5.00	0.200	ug/L	05.22.18 18.18	E8	1
n-Butylbenzene	104-51-8	<0.200	2.50	0.200	ug/L	05.22.18 18.18	E8	1
n-Propylbenzene	103-65-1	<0.0800	2.00	0.0800	ug/L	05.22.18 18.18	E8	1
o-Xylene	95-47-6	<0.0900	1.00	0.0900	ug/L	05.22.18 18.18	E8	1
p-Cymene (p-Isopropyltoluene)	99-87-6	<0.100	1.50	0.100	ug/L	05.22.18 18.18	E8	1
Sec-Butylbenzene	135-98-8	<0.100	1.50	0.100	ug/L	05.22.18 18.18	E8	1
Styrene	100-42-5	<0.0800	1.00	0.0800	ug/L	05.22.18 18.18	E8	1
tert-Butylbenzene	98-06-6	<0.200	2.50	0.200	ug/L	05.22.18 18.18	E8	1
Tetrachloroethylene	127-18-4	<0.0800	0.500	0.0800	ug/L	05.22.18 18.18	E8	1
Toluene	108-88-3	<0.0700	2.00	0.0700	ug/L	05.22.18 18.18	E8	1
Total Trihalomethane		<0.0700	0.500	0.0700	ug/L	05.22.18 18.18	E8	1
Total Xylenes	1330-20-7	<0.0900	1.00	0.0900	ug/L	05.22.18 18.18	E8	1
trans-1,2-dichloroethene	156-60-5	<0.0900	0.500	0.0900	ug/L	05.22.18 18.18	E8	1
Trichloroethene	79-01-6	<0.200	0.500	0.200	ug/L	05.22.18 18.18	E8	1
Trichlorofluoromethane	75-69-4	<0.400	2.00	0.400	ug/L	05.22.18 18.18	N1E8	1
Vinyl Acetate	108-05-4	<0.200	5.00	0.200	ug/L	05.22.18 18.18	E8	1
Vinyl Chloride	75-01-4	<0.100	0.500	0.100	ug/L	05.22.18 18.18	E8	1
trans-1,3-dichloropropene	10061-02-6	<0.0600	0.500	0.0600	ug/L	05.22.18 18.18	E8	1
1,1,2-Trichloro-1,2,2-Trifluoroethane	76-13-1	<0.300	5.00	0.300	ug/L	05.22.18 18.18	E8	1
1,3-Butadiene	106-99-0	<0.276	5.00	0.276	ug/L	05.22.18 18.18	E8	1
Cyclohexane	110-82-7	<0.115	5.00	0.115	ug/L	05.22.18 18.18	E8	1
Dicyclopentadiene	77-73-6	<0.0540	5.00	0.0540	ug/L	05.22.18 18.18	E8	1
Methylcyclohexane	108-87-2	<0.117	5.00	0.117	ug/L	05.22.18 18.18	E8	1
n-Hexane	110-54-3	<0.0920	5.00	0.0920	ug/L	05.22.18 18.18	E8	1
4-Ethyltoluene	622-96-8	Not Present			ug/L	05.22.18 18.18	T4E8	1

Certificate of Analytical Results 585543

AMEC Foster Wheeler, Phoenix, AZ

Cave Creek Landfill - Maricopa

Sample Id: **TSSV02-732-050918**
Lab Sample Id: 585543-008

Matrix: Water
Date Collected: 05.09.18 11.36

Date Received:05.10.18 14.10

Analytical Method: VOCs by SW 8260B
Tech: MNI
Analyst: MNI
Seq Number: 3050960

Date Prep: 05.22.18 12.55

Prep Method: SW5030C
% Solids:

Parameter	Cas Number	Result	RL	MDL	Units	Analysis Date	Flag	Dil
Propene	115-07-1	Not Present			ug/L	05.22.18 18.18	T4E8	1

Surrogate	% Recovery	Units	Limits	Analysis Date	Flag
4-Bromofluorobenzene	93	%	74-124	05.22.18 18.18	
Dibromofluoromethane	90	%	75-131	05.22.18 18.18	
1,2-Dichloroethane-D4	94	%	63-144	05.22.18 18.18	
Toluene-D8	81	%	80-117	05.22.18 18.18	

Certificate of Analytical Results 585543

AMEC Foster Wheeler, Phoenix, AZ

Cave Creek Landfill - Maricopa

Sample Id: **TSSV03-758-050918** Matrix: Water Date Received:05.10.18 14.10
Lab Sample Id: 585543-009 Date Collected: 05.09.18 10.03

Analytical Method: VOCs by SW 8260B Prep Method: SW5030C
Tech: MNI % Solids:
Analyst: MNI Date Prep: 05.22.18 12.55
Seq Number: 3050960

Dilution Analysis:
Seq#: 3050960 Date Analyzed: 05/22/18 22:31 Date Prep: 05/22/18 12:55

Parameter	Cas Number	Result	RL	MDL	Units	Analysis Date	Flag	Dil
1,1,1,2-Tetrachloroethane	630-20-6	<0.100	0.500	0.100	ug/L	05.22.18 18.43	E8	1
1,1,1-Trichloroethane	71-55-6	<0.200	0.500	0.200	ug/L	05.22.18 18.43	E8	1
1,1,2,2-Tetrachloroethane	79-34-5	<0.100	0.500	0.100	ug/L	05.22.18 18.43	E8	1
1,1,2-Trichloroethane	79-00-5	<0.0900	0.500	0.0900	ug/L	05.22.18 18.43	E8	1
1,1-Dichloroethane	75-34-3	**0.900**	0.500	0.0700	ug/L	05.22.18 18.43		1
1,1-Dichloroethene	75-35-4	<0.200	0.500	0.200	ug/L	05.22.18 18.43	E8	1
1,1-Dichloropropene	563-58-6	<0.200	1.00	0.200	ug/L	05.22.18 18.43	E8	1
1,2,3-Trichlorobenzene	87-61-6	<0.200	5.00	0.200	ug/L	05.22.18 18.43	E8	1
1,2,3-Trichloropropane	96-18-4	<0.200	1.00	0.200	ug/L	05.22.18 18.43	E8	1
1,2,4-Trichlorobenzene	120-82-1	<0.0700	5.00	0.0700	ug/L	05.22.18 18.43	E8	1
1,2,4-Trimethylbenzene	95-63-6	<0.0700	2.00	0.0700	ug/L	05.22.18 18.43	E8	1
1,2-Dibromo-3-Chloropropane	96-12-8	<0.300	2.00	0.300	ug/L	05.22.18 18.43	L2E8	1
1,2-Dibromoethane	106-93-4	<0.200	0.500	0.200	ug/L	05.22.18 18.43	E8	1
1,2-Dichlorobenzene	95-50-1	<0.0800	1.50	0.0800	ug/L	05.22.18 18.43	E8	1
1,2-Dichloroethane	107-06-2	<0.100	0.500	0.100	ug/L	05.22.18 18.43	E8	1
1,2-Dichloropropane	78-87-5	<0.0900	0.500	0.0900	ug/L	05.22.18 18.43	E8	1
1,3,5-Trimethylbenzene	108-67-8	<0.0700	1.50	0.0700	ug/L	05.22.18 18.43	E8	1
1,3-Dichlorobenzene	541-73-1	<0.0600	1.50	0.0600	ug/L	05.22.18 18.43	E8	1
1,3-Dichloropropane	142-28-9	<0.0700	1.00	0.0700	ug/L	05.22.18 18.43	E8	1
1,4-Dichlorobenzene	106-46-7	<0.200	1.50	0.200	ug/L	05.22.18 18.43	E8	1
2,2-Dichloropropane	594-20-7	<0.200	0.500	0.200	ug/L	05.22.18 18.43	E8	1
2-Butanone	78-93-3	<0.300	5.00	0.300	ug/L	05.22.18 18.43	E8	1
2-Chlorotoluene	95-49-8	<0.0800	1.50	0.0800	ug/L	05.22.18 18.43	E8	1
2-Hexanone	591-78-6	<0.200	5.00	0.200	ug/L	05.22.18 18.43	E8	1
4-Chlorotoluene	106-43-4	<0.0700	2.00	0.0700	ug/L	05.22.18 18.43	E8	1
4-Methyl-2-Pentanone	108-10-1	<0.200	5.00	0.200	ug/L	05.22.18 18.43	E8	1
Acetone	67-64-1	**43.9**	20.0	0.600	ug/L	05.22.18 18.43		1
Benzene	71-43-2	<0.100	0.500	0.100	ug/L	05.22.18 18.43	E8	1
Bromobenzene	108-86-1	<0.0900	1.50	0.0900	ug/L	05.22.18 18.43	E8	1
Bromochloromethane	74-97-5	<0.200	0.500	0.200	ug/L	05.22.18 18.43	E8	1
Bromodichloromethane	75-27-4	<0.0800	0.500	0.0800	ug/L	05.22.18 18.43	E8	1
Bromoform	75-25-2	<0.100	1.00	0.100	ug/L	05.22.18 18.43	E8	1
Bromomethane	74-83-9	<0.300	5.00	0.300	ug/L	05.22.18 18.43	E8	1
Carbon Disulfide	75-15-0	<0.0900	0.500	0.0900	ug/L	05.22.18 18.43	E8	1
Carbon Tetrachloride	56-23-5	<0.200	0.500	0.200	ug/L	05.22.18 18.43	E8	1

Certificate of Analytical Results 585543

AMEC Foster Wheeler, Phoenix, AZ

Cave Creek Landfill - Maricopa

Sample Id: **TSSV03-758-050918** Matrix: Water Date Received:05.10.18 14.10
Lab Sample Id: 585543-009 Date Collected: 05.09.18 10.03

Analytical Method: VOCs by SW 8260B Prep Method: SW5030C
Tech: MNI % Solids:
Analyst: MNI Date Prep: 05.22.18 12.55
Seq Number: 3050960

Dilution Analysis:
Seq#: 3050960 Date Analyzed: 05/22/18 22:31 Date Prep: 05/22/18 12:55

Parameter	Cas Number	Result	RL	MDL	Units	Analysis Date	Flag	Dil
Chlorobenzene	108-90-7	<0.0700	0.500	0.0700	ug/L	05.22.18 18.43	E8	1
Chloroethane	75-00-3	<0.600	4.00	0.600	ug/L	05.22.18 18.43	E8	1
Chloroform	67-66-3	<0.0700	0.500	0.0700	ug/L	05.22.18 18.43	E8	1
Chloromethane	74-87-3	<0.200	5.00	0.200	ug/L	05.22.18 18.43	E8	1
cis-1,2-Dichloroethene	156-59-2	**10.6**	0.500	0.200	ug/L	05.22.18 18.43		1
cis-1,3-Dichloropropene	10061-01-5	<0.0800	1.00	0.0800	ug/L	05.22.18 18.43	E8	1
Dibromochloromethane	124-48-1	<0.0700	0.500	0.0700	ug/L	05.22.18 18.43	E8	1
Dibromomethane	74-95-3	<0.200	0.500	0.200	ug/L	05.22.18 18.43	E8	1
Dichlorodifluoromethane	75-71-8	<0.200	2.00	0.200	ug/L	05.22.18 18.43	L1E8	1
Ethylbenzene	100-41-4	<0.0900	2.00	0.0900	ug/L	05.22.18 18.43	E8	1
Hexachlorobutadiene	87-68-3	<0.200	5.00	0.200	ug/L	05.22.18 18.43	E8	1
Iodomethane (Methyl Iodide)	74-88-4	<0.300	2.00	0.300	ug/L	05.22.18 18.43	E8	1
isopropylbenzene	98-82-8	<0.0800	2.50	0.0800	ug/L	05.22.18 18.43	E8	1
m,p-Xylenes	179601-23-1	<0.0900	2.00	0.0900	ug/L	05.22.18 18.43	E8	1
Methylene Chloride	75-09-2	<0.200	3.00	0.200	ug/L	05.22.18 18.43	E8	1
MTBE	1634-04-4	<0.100	2.00	0.100	ug/L	05.22.18 18.43	E8	1
Naphthalene	91-20-3	<0.200	5.00	0.200	ug/L	05.22.18 18.43	E8	1
n-Butylbenzene	104-51-8	<0.200	2.50	0.200	ug/L	05.22.18 18.43	E8	1
n-Propylbenzene	103-65-1	<0.0800	2.00	0.0800	ug/L	05.22.18 18.43	E8	1
o-Xylene	95-47-6	<0.0900	1.00	0.0900	ug/L	05.22.18 18.43	E8	1
p-Cymene (p-Isopropyltoluene)	99-87-6	<0.100	1.50	0.100	ug/L	05.22.18 18.43	E8	1
Sec-Butylbenzene	135-98-8	<0.100	1.50	0.100	ug/L	05.22.18 18.43	E8	1
Styrene	100-42-5	<0.0800	1.00	0.0800	ug/L	05.22.18 18.43	E8	1
tert-Butylbenzene	98-06-6	<0.200	2.50	0.200	ug/L	05.22.18 18.43	E8	1
Tetrachloroethylene	127-18-4	**5.15**	0.500	0.0800	ug/L	05.22.18 18.43		1
Toluene	108-88-3	<0.0700	2.00	0.0700	ug/L	05.22.18 18.43	E8	1
Total Trihalomethane		<0.0700	0.500	0.0700	ug/L	05.22.18 18.43	E8	1
Total Xylenes	1330-20-7	<0.0900	1.00	0.0900	ug/L	05.22.18 18.43	E8	1
trans-1,2-dichloroethene	156-60-5	<0.0900	0.500	0.0900	ug/L	05.22.18 18.43	E8	1
Trichloroethene	79-01-6	**436**	5.00	2.00	ug/L	05.22.18 22.31	D2	10
Trichlorofluoromethane	75-69-4	<0.400	2.00	0.400	ug/L	05.22.18 18.43	N1E8	1
Vinyl Acetate	108-05-4	<0.200	5.00	0.200	ug/L	05.22.18 18.43	E8	1
Vinyl Chloride	75-01-4	<0.100	0.500	0.100	ug/L	05.22.18 18.43	E8	1
trans-1,3-dichloropropene	10061-02-6	<0.0600	0.500	0.0600	ug/L	05.22.18 18.43	E8	1
1,1,2-Trichloro-1,2,2-Trifluoroethane	76-13-1	<0.300	5.00	0.300	ug/L	05.22.18 18.43	E8	1

Certificate of Analytical Results 585543

AMEC Foster Wheeler, Phoenix, AZ

Cave Creek Landfill - Maricopa

Sample Id: **TSSV03-758-050918** Matrix: Water Date Received:05.10.18 14.10
Lab Sample Id: 585543-009 Date Collected: 05.09.18 10.03

Analytical Method: VOCs by SW 8260B Prep Method: SW5030C
Tech: MNI % Solids:
Analyst: MNI Date Prep: 05.22.18 12.55
Seq Number: 3050960

Dilution Analysis:
Seq#: 3050960 Date Analyzed: 05/22/18 22:31 Date Prep: 05/22/18 12:55

Parameter	Cas Number	Result	RL	MDL	Units	Analysis Date	Flag	Dil
1,3-Butadiene	106-99-0	<0.276	5.00	0.276	ug/L	05.22.18 18.43	E8	1
Cyclohexane	110-82-7	<0.115	5.00	0.115	ug/L	05.22.18 18.43	E8	1
Dicyclopentadiene	77-73-6	<0.0540	5.00	0.0540	ug/L	05.22.18 18.43	E8	1
Methylcyclohexane	108-87-2	<0.117	5.00	0.117	ug/L	05.22.18 18.43	E8	1
n-Hexane	110-54-3	<0.0920	5.00	0.0920	ug/L	05.22.18 18.43	E8	1
4-Ethyltoluene	622-96-8	Not Present			ug/L	05.22.18 18.43	T4E8	1
Propene	115-07-1	Not Present			ug/L	05.22.18 18.43	T4E8	1

Surrogate	% Recovery	Units	Limits	Analysis Date	Flag
4-Bromofluorobenzene	85	%	74-124	05.22.18 18.43	
Dibromofluoromethane	87	%	75-131	05.22.18 18.43	
1,2-Dichloroethane-D4	86	%	63-144	05.22.18 18.43	
Toluene-D8	84	%	80-117	05.22.18 18.43	

Certificate of Analytical Results 585543

AMEC Foster Wheeler, Phoenix, AZ

Cave Creek Landfill - Maricopa

Sample Id: **TSSV04-760-050818**
Lab Sample Id: 585543-010

Matrix: Water
Date Collected: 05.08.18 13.31

Date Received:05.10.18 14.10

Analytical Method: VOCs by SW 8260B
Tech: MNI
Analyst: MNI
Seq Number: 3051122

Date Prep: 05.21.18 10.31

Prep Method: SW5030C
% Solids:

Parameter	Cas Number	Result	RL	MDL	Units	Analysis Date	Flag	Dil
1,1,1,2-Tetrachloroethane	630-20-6	<0.500	2.50	0.500	ug/L	05.21.18 19.08	D1E8	5
1,1,1-Trichloroethane	71-55-6	<1.00	2.50	1.00	ug/L	05.21.18 19.08	D1E8	5
1,1,2,2-Tetrachloroethane	79-34-5	<0.500	2.50	0.500	ug/L	05.21.18 19.08	D1E8	5
1,1,2-Trichloroethane	79-00-5	<0.450	2.50	0.450	ug/L	05.21.18 19.08	D1E8	5
1,1-Dichloroethane	75-34-3	<0.350	2.50	0.350	ug/L	05.21.18 19.08	D1E8	5
1,1-Dichloroethene	75-35-4	<1.00	2.50	1.00	ug/L	05.21.18 19.08	D1E8	5
1,1-Dichloropropene	563-58-6	<1.00	5.00	1.00	ug/L	05.21.18 19.08	D1E8	5
1,2,3-Trichlorobenzene	87-61-6	<1.00	25.0	1.00	ug/L	05.21.18 19.08	D1E8	5
1,2,3-Trichloropropane	96-18-4	<1.00	5.00	1.00	ug/L	05.21.18 19.08	D1E8	5
1,2,4-Trichlorobenzene	120-82-1	<0.350	25.0	0.350	ug/L	05.21.18 19.08	D1E8	5
1,2,4-Trimethylbenzene	95-63-6	<0.350	10.0	0.350	ug/L	05.21.18 19.08	D1E8	5
1,2-Dibromo-3-Chloropropane	96-12-8	<1.50	10.0	1.50	ug/L	05.21.18 19.08	D1E8	5
1,2-Dibromoethane	106-93-4	<1.00	2.50	1.00	ug/L	05.21.18 19.08	D1E8	5
1,2-Dichlorobenzene	95-50-1	<0.400	7.50	0.400	ug/L	05.21.18 19.08	D1E8	5
1,2-Dichloroethane	107-06-2	<0.500	2.50	0.500	ug/L	05.21.18 19.08	D1E8	5
1,2-Dichloropropane	78-87-5	<0.450	2.50	0.450	ug/L	05.21.18 19.08	D1E8	5
1,3,5-Trimethylbenzene	108-67-8	<0.350	7.50	0.350	ug/L	05.21.18 19.08	D1E8	5
1,3-Dichlorobenzene	541-73-1	<0.300	7.50	0.300	ug/L	05.21.18 19.08	D1E8	5
1,3-Dichloropropane	142-28-9	<0.350	5.00	0.350	ug/L	05.21.18 19.08	D1E8	5
1,4-Dichlorobenzene	106-46-7	<1.00	7.50	1.00	ug/L	05.21.18 19.08	D1E8	5
2,2-Dichloropropane	594-20-7	<1.00	2.50	1.00	ug/L	05.21.18 19.08	L2E8D1	5
2-Butanone	78-93-3	<1.50	25.0	1.50	ug/L	05.21.18 19.08	D1E8	5
2-Chlorotoluene	95-49-8	<0.400	7.50	0.400	ug/L	05.21.18 19.08	D1E8	5
2-Hexanone	591-78-6	<1.00	25.0	1.00	ug/L	05.21.18 19.08	D1E8	5
4-Chlorotoluene	106-43-4	<0.350	10.0	0.350	ug/L	05.21.18 19.08	D1E8	5
4-Methyl-2-Pentanone	108-10-1	<1.00	25.0	1.00	ug/L	05.21.18 19.08	D1E8	5
Acetone	67-64-1	**71.2**	100	3.00	ug/L	05.21.18 19.08	E4D2	5
Benzene	71-43-2	<0.500	2.50	0.500	ug/L	05.21.18 19.08	D1E8	5
Bromobenzene	108-86-1	<0.450	7.50	0.450	ug/L	05.21.18 19.08	D1E8	5
Bromochloromethane	74-97-5	<1.00	2.50	1.00	ug/L	05.21.18 19.08	D1E8	5
Bromodichloromethane	75-27-4	<0.400	2.50	0.400	ug/L	05.21.18 19.08	D1E8	5
Bromoform	75-25-2	<0.500	5.00	0.500	ug/L	05.21.18 19.08	D1E8	5
Bromomethane	74-83-9	<1.50	25.0	1.50	ug/L	05.21.18 19.08	D1E8	5
Carbon Disulfide	75-15-0	<0.450	2.50	0.450	ug/L	05.21.18 19.08	D1E8	5
Carbon Tetrachloride	56-23-5	<1.00	2.50	1.00	ug/L	05.21.18 19.08	D1E8	5
Chlorobenzene	108-90-7	<0.350	2.50	0.350	ug/L	05.21.18 19.08	D1E8	5
Chloroethane	75-00-3	<3.00	20.0	3.00	ug/L	05.21.18 19.08	D1E8	5
Chloroform	67-66-3	<0.350	2.50	0.350	ug/L	05.21.18 19.08	D1E8	5

Certificate of Analytical Results 585543

AMEC Foster Wheeler, Phoenix, AZ

Cave Creek Landfill - Maricopa

Sample Id: **TSSV04-760-050818**
Lab Sample Id: 585543-010

Matrix: Water
Date Collected: 05.08.18 13.31

Date Received:05.10.18 14.10

Analytical Method: VOCs by SW 8260B
Tech: MNI
Analyst: MNI
Seq Number: 3051122

Date Prep: 05.21.18 10.31

Prep Method: SW5030C
% Solids:

Parameter	Cas Number	Result	RL	MDL	Units	Analysis Date	Flag	Dil
Chloromethane	74-87-3	<1.00	25.0	1.00	ug/L	05.21.18 19.08	D1E8	5
cis-1,2-Dichloroethene	156-59-2	<1.00	2.50	1.00	ug/L	05.21.18 19.08	D1E8	5
cis-1,3-Dichloropropene	10061-01-5	<0.400	5.00	0.400	ug/L	05.21.18 19.08	D1E8	5
Dibromochloromethane	124-48-1	<0.350	2.50	0.350	ug/L	05.21.18 19.08	D1E8	5
Dibromomethane	74-95-3	<1.00	2.50	1.00	ug/L	05.21.18 19.08	D1E8	5
Dichlorodifluoromethane	75-71-8	<1.00	10.0	1.00	ug/L	05.21.18 19.08	D1E8	5
Ethylbenzene	100-41-4	<0.450	10.0	0.450	ug/L	05.21.18 19.08	D1E8	5
Hexachlorobutadiene	87-68-3	<1.00	25.0	1.00	ug/L	05.21.18 19.08	D1E8	5
Iodomethane (Methyl Iodide)	74-88-4	<1.50	10.0	1.50	ug/L	05.21.18 19.08	D1E8	5
isopropylbenzene	98-82-8	<0.400	12.5	0.400	ug/L	05.21.18 19.08	D1E8	5
m,p-Xylenes	179601-23-1	<0.450	10.0	0.450	ug/L	05.21.18 19.08	D1E8	5
Methylene Chloride	75-09-2	<1.00	15.0	1.00	ug/L	05.21.18 19.08	D1E8	5
MTBE	1634-04-4	<0.500	10.0	0.500	ug/L	05.21.18 19.08	D1E8	5
Naphthalene	91-20-3	<1.00	25.0	1.00	ug/L	05.21.18 19.08	D1E8	5
n-Butylbenzene	104-51-8	<1.00	12.5	1.00	ug/L	05.21.18 19.08	D1E8	5
n-Propylbenzene	103-65-1	<0.400	10.0	0.400	ug/L	05.21.18 19.08	D1E8	5
o-Xylene	95-47-6	<0.450	5.00	0.450	ug/L	05.21.18 19.08	D1E8	5
p-Cymene (p-Isopropyltoluene)	99-87-6	<0.500	7.50	0.500	ug/L	05.21.18 19.08	D1E8	5
Sec-Butylbenzene	135-98-8	<0.500	7.50	0.500	ug/L	05.21.18 19.08	D1E8	5
Styrene	100-42-5	<0.400	5.00	0.400	ug/L	05.21.18 19.08	D1E8	5
tert-Butylbenzene	98-06-6	<1.00	12.5	1.00	ug/L	05.21.18 19.08	D1E8	5
Tetrachloroethylene	127-18-4	<0.400	2.50	0.400	ug/L	05.21.18 19.08	D1E8	5
Toluene	108-88-3	<0.350	10.0	0.350	ug/L	05.21.18 19.08	D1E8	5
Total Trihalomethane		<0.350	2.50	0.350	ug/L	05.21.18 19.08	D1E8	5
Total Xylenes	1330-20-7	<0.450	5.00	0.450	ug/L	05.21.18 19.08	D1E8	5
trans-1,2-dichloroethene	156-60-5	<0.450	2.50	0.450	ug/L	05.21.18 19.08	D1E8	5
Trichloroethene	79-01-6	**54.9**	2.50	1.00	ug/L	05.21.18 19.08	D2	5
Trichlorofluoromethane	75-69-4	<2.00	10.0	2.00	ug/L	05.21.18 19.08	D1E8	5
Vinyl Acetate	108-05-4	<1.00	25.0	1.00	ug/L	05.21.18 19.08	D1E8	5
Vinyl Chloride	75-01-4	<0.500	2.50	0.500	ug/L	05.21.18 19.08	D1E8	5
trans-1,3-dichloropropene	10061-02-6	<0.300	2.50	0.300	ug/L	05.21.18 19.08	D1E8	5
1,1,2-Trichloro-1,2,2-Trifluoroethane	76-13-1	<1.50	25.0	1.50	ug/L	05.21.18 19.08	D1E8	5
1,3-Butadiene	106-99-0	<1.38	25.0	1.38	ug/L	05.21.18 19.08	D1E8	5
Cyclohexane	110-82-7	<0.575	25.0	0.575	ug/L	05.21.18 19.08	D1E8	5
Dicyclopentadiene	77-73-6	<0.270	25.0	0.270	ug/L	05.21.18 19.08	D1E8	5
Methylcyclohexane	108-87-2	<0.585	25.0	0.585	ug/L	05.21.18 19.08	D1E8	5
n-Hexane	110-54-3	<0.460	25.0	0.460	ug/L	05.21.18 19.08	D1E8	5
4-Ethyltoluene	622-96-8	Not Present			ug/L	05.21.18 19.08	T4E8	5

Final 1.000

Certificate of Analytical Results 585543

AMEC Foster Wheeler, Phoenix, AZ

Cave Creek Landfill - Maricopa

Sample Id: **TSSV04-760-050818**
Lab Sample Id: 585543-010

Matrix: Water
Date Collected: 05.08.18 13.31

Date Received: 05.10.18 14.10

Analytical Method: VOCs by SW 8260B
Tech: MNI
Analyst: MNI
Seq Number: 3051122

Date Prep: 05.21.18 10.31

Prep Method: SW5030C
% Solids:

Parameter	Cas Number	Result	RL	MDL	Units	Analysis Date	Flag	Dil
Propene	115-07-1	Not Present			ug/L	05.21.18 19.08	T4E8	5

Surrogate	% Recovery	Units	Limits	Analysis Date	Flag
4-Bromofluorobenzene	95	%	74-124	05.21.18 19.08	
Dibromofluoromethane	100	%	75-131	05.21.18 19.08	
1,2-Dichloroethane-D4	101	%	63-144	05.21.18 19.08	
Toluene-D8	96	%	80-117	05.21.18 19.08	

Certificate of Analytical Results 585543

AMEC Foster Wheeler, Phoenix, AZ

Cave Creek Landfill - Maricopa

Sample Id: **TSSV05-760-050918** Matrix: Water Date Received:05.10.18 14.10
Lab Sample Id: 585543-011 Date Collected: 05.09.18 08.40

Analytical Method: VOCs by SW 8260B Prep Method: SW5030C
Tech: MNI % Solids:
Analyst: MNI Date Prep: 05.22.18 12.55
Seq Number: 3050960

Dilution Analysis:
Seq#: 3050960 Date Analyzed: 05/22/18 22:57 Date Prep: 05/22/18 12:55

Parameter	Cas Number	Result	RL	MDL	Units	Analysis Date	Flag	Dil
1,1,1,2-Tetrachloroethane	630-20-6	<0.100	0.500	0.100	ug/L	05.22.18 19.08	E8	1
1,1,1-Trichloroethane	71-55-6	<0.200	0.500	0.200	ug/L	05.22.18 19.08	E8	1
1,1,2,2-Tetrachloroethane	79-34-5	<0.100	0.500	0.100	ug/L	05.22.18 19.08	E8	1
1,1,2-Trichloroethane	79-00-5	<0.0900	0.500	0.0900	ug/L	05.22.18 19.08	E8	1
1,1-Dichloroethane	75-34-3	<0.0700	0.500	0.0700	ug/L	05.22.18 19.08	E8	1
1,1-Dichloroethene	75-35-4	<0.200	0.500	0.200	ug/L	05.22.18 19.08	E8	1
1,1-Dichloropropene	563-58-6	<0.200	1.00	0.200	ug/L	05.22.18 19.08	E8	1
1,2,3-Trichlorobenzene	87-61-6	<0.200	5.00	0.200	ug/L	05.22.18 19.08	E8	1
1,2,3-Trichloropropane	96-18-4	<0.200	1.00	0.200	ug/L	05.22.18 19.08	E8	1
1,2,4-Trichlorobenzene	120-82-1	<0.0700	5.00	0.0700	ug/L	05.22.18 19.08	E8	1
1,2,4-Trimethylbenzene	95-63-6	<0.0700	2.00	0.0700	ug/L	05.22.18 19.08	E8	1
1,2-Dibromo-3-Chloropropane	96-12-8	<0.300	2.00	0.300	ug/L	05.22.18 19.08	L2E8	1
1,2-Dibromoethane	106-93-4	<0.200	0.500	0.200	ug/L	05.22.18 19.08	E8	1
1,2-Dichlorobenzene	95-50-1	<0.0800	1.50	0.0800	ug/L	05.22.18 19.08	E8	1
1,2-Dichloroethane	107-06-2	<0.100	0.500	0.100	ug/L	05.22.18 19.08	E8	1
1,2-Dichloropropane	78-87-5	<0.0900	0.500	0.0900	ug/L	05.22.18 19.08	E8	1
1,3,5-Trimethylbenzene	108-67-8	<0.0700	1.50	0.0700	ug/L	05.22.18 19.08	E8	1
1,3-Dichlorobenzene	541-73-1	<0.0600	1.50	0.0600	ug/L	05.22.18 19.08	E8	1
1,3-Dichloropropane	142-28-9	<0.0700	1.00	0.0700	ug/L	05.22.18 19.08	E8	1
1,4-Dichlorobenzene	106-46-7	<0.200	1.50	0.200	ug/L	05.22.18 19.08	E8	1
2,2-Dichloropropane	594-20-7	<0.200	0.500	0.200	ug/L	05.22.18 19.08	E8	1
2-Butanone	78-93-3	<0.300	5.00	0.300	ug/L	05.22.18 19.08	E8	1
2-Chlorotoluene	95-49-8	<0.0800	1.50	0.0800	ug/L	05.22.18 19.08	E8	1
2-Hexanone	591-78-6	<0.200	5.00	0.200	ug/L	05.22.18 19.08	E8	1
4-Chlorotoluene	106-43-4	<0.0700	2.00	0.0700	ug/L	05.22.18 19.08	E8	1
4-Methyl-2-Pentanone	108-10-1	<0.200	5.00	0.200	ug/L	05.22.18 19.08	E8	1
Acetone	67-64-1	**444**	200	6.00	ug/L	05.22.18 22.57	D2	10
Benzene	71-43-2	<0.100	0.500	0.100	ug/L	05.22.18 19.08	E8	1
Bromobenzene	108-86-1	<0.0900	1.50	0.0900	ug/L	05.22.18 19.08	E8	1
Bromochloromethane	74-97-5	<0.200	0.500	0.200	ug/L	05.22.18 19.08	E8	1
Bromodichloromethane	75-27-4	<0.0800	0.500	0.0800	ug/L	05.22.18 19.08	E8	1
Bromoform	75-25-2	<0.100	1.00	0.100	ug/L	05.22.18 19.08	E8	1
Bromomethane	74-83-9	<0.300	5.00	0.300	ug/L	05.22.18 19.08	E8	1
Carbon Disulfide	75-15-0	<0.0900	0.500	0.0900	ug/L	05.22.18 19.08	E8	1
Carbon Tetrachloride	56-23-5	<0.200	0.500	0.200	ug/L	05.22.18 19.08	E8	1

Certificate of Analytical Results 585543

AMEC Foster Wheeler, Phoenix, AZ

Cave Creek Landfill - Maricopa

Sample Id: **TSSV05-760-050918** Matrix: Water Date Received:05.10.18 14.10
Lab Sample Id: 585543-011 Date Collected: 05.09.18 08.40

Analytical Method: VOCs by SW 8260B Prep Method: SW5030C
Tech: MNI % Solids:
Analyst: MNI Date Prep: 05.22.18 12.55
Seq Number: 3050960

Dilution Analysis:
Seq#: 3050960 Date Analyzed: 05/22/18 22:57 Date Prep: 05/22/18 12:55

Parameter	Cas Number	Result	RL	MDL	Units	Analysis Date	Flag	Dil
Chlorobenzene	108-90-7	<0.0700	0.500	0.0700	ug/L	05.22.18 19.08	E8	1
Chloroethane	75-00-3	<0.600	4.00	0.600	ug/L	05.22.18 19.08	E8	1
Chloroform	67-66-3	<0.0700	0.500	0.0700	ug/L	05.22.18 19.08	E8	1
Chloromethane	74-87-3	<0.200	5.00	0.200	ug/L	05.22.18 19.08	E8	1
cis-1,2-Dichloroethene	156-59-2	<0.200	0.500	0.200	ug/L	05.22.18 19.08	E8	1
cis-1,3-Dichloropropene	10061-01-5	<0.0800	1.00	0.0800	ug/L	05.22.18 19.08	E8	1
Dibromochloromethane	124-48-1	<0.0700	0.500	0.0700	ug/L	05.22.18 19.08	E8	1
Dibromomethane	74-95-3	<0.200	0.500	0.200	ug/L	05.22.18 19.08	E8	1
Dichlorodifluoromethane	75-71-8	<0.200	2.00	0.200	ug/L	05.22.18 19.08	L1E8	1
Ethylbenzene	100-41-4	<0.0900	2.00	0.0900	ug/L	05.22.18 19.08	E8	1
Hexachlorobutadiene	87-68-3	<0.200	5.00	0.200	ug/L	05.22.18 19.08	E8	1
Iodomethane (Methyl Iodide)	74-88-4	<0.300	2.00	0.300	ug/L	05.22.18 19.08	E8	1
isopropylbenzene	98-82-8	<0.0800	2.50	0.0800	ug/L	05.22.18 19.08	E8	1
m,p-Xylenes	179601-23-1	<0.0900	2.00	0.0900	ug/L	05.22.18 19.08	E8	1
Methylene Chloride	75-09-2	<0.200	3.00	0.200	ug/L	05.22.18 19.08	E8	1
MTBE	1634-04-4	<0.100	2.00	0.100	ug/L	05.22.18 19.08	E8	1
Naphthalene	91-20-3	<0.200	5.00	0.200	ug/L	05.22.18 19.08	E8	1
n-Butylbenzene	104-51-8	<0.200	2.50	0.200	ug/L	05.22.18 19.08	E8	1
n-Propylbenzene	103-65-1	<0.0800	2.00	0.0800	ug/L	05.22.18 19.08	E8	1
o-Xylene	95-47-6	<0.0900	1.00	0.0900	ug/L	05.22.18 19.08	E8	1
p-Cymene (p-Isopropyltoluene)	99-87-6	<0.100	1.50	0.100	ug/L	05.22.18 19.08	E8	1
Sec-Butylbenzene	135-98-8	<0.100	1.50	0.100	ug/L	05.22.18 19.08	E8	1
Styrene	100-42-5	<0.0800	1.00	0.0800	ug/L	05.22.18 19.08	E8	1
tert-Butylbenzene	98-06-6	<0.200	2.50	0.200	ug/L	05.22.18 19.08	E8	1
Tetrachloroethylene	127-18-4	<0.0800	0.500	0.0800	ug/L	05.22.18 19.08	E8	1
Toluene	108-88-3	<0.0700	2.00	0.0700	ug/L	05.22.18 19.08	E8	1
Total Trihalomethane		<0.0700	0.500	0.0700	ug/L	05.22.18 19.08	E8	1
Total Xylenes	1330-20-7	<0.0900	1.00	0.0900	ug/L	05.22.18 19.08	E8	1
trans-1,2-dichloroethene	156-60-5	<0.0900	0.500	0.0900	ug/L	05.22.18 19.08	E8	1
Trichloroethene	79-01-6	**3.95**	0.500	0.200	ug/L	05.22.18 19.08		1
Trichlorofluoromethane	75-69-4	<0.400	2.00	0.400	ug/L	05.22.18 19.08	L1E8	1
Vinyl Acetate	108-05-4	<0.200	5.00	0.200	ug/L	05.22.18 19.08	E8	1
Vinyl Chloride	75-01-4	<0.100	0.500	0.100	ug/L	05.22.18 19.08	E8	1
trans-1,3-dichloropropene	10061-02-6	<0.0600	0.500	0.0600	ug/L	05.22.18 19.08	E8	1
1,1,2-Trichloro-1,2,2-Trifluoroethane	76-13-1	<0.300	5.00	0.300	ug/L	05.22.18 19.08	E8	1

Certificate of Analytical Results 585543

AMEC Foster Wheeler, Phoenix, AZ

Cave Creek Landfill - Maricopa

Sample Id: **TSSV05-760-050918** Matrix: Water Date Received:05.10.18 14.10

Lab Sample Id: 585543-011 Date Collected: 05.09.18 08.40

Analytical Method: VOCs by SW 8260B Prep Method: SW5030C

Tech: MNI % Solids:

Analyst: MNI Date Prep: 05.22.18 12.55

Seq Number: 3050960

Dilution Analysis:

Seq#: 3050960 Date Analyzed: 05/22/18 22:57 Date Prep: 05/22/18 12:55

Parameter	Cas Number	Result	RL	MDL	Units	Analysis Date	Flag	Dil
1,3-Butadiene	106-99-0	<0.276	5.00	0.276	ug/L	05.22.18 19.08	E8	1
Cyclohexane	110-82-7	<0.115	5.00	0.115	ug/L	05.22.18 19.08	E8	1
Dicyclopentadiene	77-73-6	<0.0540	5.00	0.0540	ug/L	05.22.18 19.08	E8	1
Methylcyclohexane	108-87-2	<0.117	5.00	0.117	ug/L	05.22.18 19.08	E8	1
n-Hexane	110-54-3	<0.0920	5.00	0.0920	ug/L	05.22.18 19.08	E8	1
4-Ethyltoluene	622-96-8	Not Present			ug/L	05.22.18 19.08	T4E8	1
Propene	115-07-1	Not Present			ug/L	05.22.18 19.08	T4E8	1

Surrogate	% Recovery	Units	Limits	Analysis Date	Flag
4-Bromofluorobenzene	88	%	74-124	05.22.18 19.08	
Dibromofluoromethane	88	%	75-131	05.22.18 19.08	
1,2-Dichloroethane-D4	90	%	63-144	05.22.18 19.08	
Toluene-D8	92	%	80-117	05.22.18 19.08	

Certificate of Analytical Results 585543

AMEC Foster Wheeler, Phoenix, AZ

Cave Creek Landfill - Maricopa

Sample Id: **TSSV06-729-050718** Matrix: Water Date Received:05.10.18 14.10
Lab Sample Id: 585543-012 Date Collected: 05.07.18 08.08

Analytical Method: VOCs by SW 8260B Prep Method: SW5030C
Tech: MNI % Solids:
Analyst: MNI Date Prep: 05.21.18 10.31
Seq Number: 3051122

Parameter	Cas Number	Result	RL	MDL	Units	Analysis Date	Flag	Dil
1,1,1,2-Tetrachloroethane	630-20-6	<1.00	5.00	1.00	ug/L	05.21.18 14.24	D1E8	10
1,1,1-Trichloroethane	71-55-6	<2.00	5.00	2.00	ug/L	05.21.18 14.24	D1E8	10
1,1,2,2-Tetrachloroethane	79-34-5	<1.00	5.00	1.00	ug/L	05.21.18 14.24	D1E8	10
1,1,2-Trichloroethane	79-00-5	<0.900	5.00	0.900	ug/L	05.21.18 14.24	D1E8	10
1,1-Dichloroethane	75-34-3	<0.700	5.00	0.700	ug/L	05.21.18 14.24	D1E8	10
1,1-Dichloroethene	75-35-4	<2.00	5.00	2.00	ug/L	05.21.18 14.24	D1E8	10
1,1-Dichloropropene	563-58-6	<2.00	10.0	2.00	ug/L	05.21.18 14.24	D1E8	10
1,2,3-Trichlorobenzene	87-61-6	<2.00	50.0	2.00	ug/L	05.21.18 14.24	D1E8	10
1,2,3-Trichloropropane	96-18-4	<2.00	10.0	2.00	ug/L	05.21.18 14.24	D1E8	10
1,2,4-Trichlorobenzene	120-82-1	<0.700	50.0	0.700	ug/L	05.21.18 14.24	D1E8	10
1,2,4-Trimethylbenzene	95-63-6	<0.700	20.0	0.700	ug/L	05.21.18 14.24	D1E8	10
1,2-Dibromo-3-Chloropropane	96-12-8	<3.00	20.0	3.00	ug/L	05.21.18 14.24	D1E8	10
1,2-Dibromoethane	106-93-4	<2.00	5.00	2.00	ug/L	05.21.18 14.24	D1E8	10
1,2-Dichlorobenzene	95-50-1	<0.800	15.0	0.800	ug/L	05.21.18 14.24	D1E8	10
1,2-Dichloroethane	107-06-2	<1.00	5.00	1.00	ug/L	05.21.18 14.24	D1E8	10
1,2-Dichloropropane	78-87-5	<0.900	5.00	0.900	ug/L	05.21.18 14.24	D1E8	10
1,3,5-Trimethylbenzene	108-67-8	<0.700	15.0	0.700	ug/L	05.21.18 14.24	D1E8	10
1,3-Dichlorobenzene	541-73-1	<0.600	15.0	0.600	ug/L	05.21.18 14.24	D1E8	10
1,3-Dichloropropane	142-28-9	<0.700	10.0	0.700	ug/L	05.21.18 14.24	D1E8	10
1,4-Dichlorobenzene	106-46-7	<2.00	15.0	2.00	ug/L	05.21.18 14.24	D1E8	10
2,2-Dichloropropane	594-20-7	<2.00	5.00	2.00	ug/L	05.21.18 14.24	L2E8D1	10
2-Butanone	78-93-3	<3.00	50.0	3.00	ug/L	05.21.18 14.24	D1E8	10
2-Chlorotoluene	95-49-8	<0.800	15.0	0.800	ug/L	05.21.18 14.24	D1E8	10
2-Hexanone	591-78-6	<2.00	50.0	2.00	ug/L	05.21.18 14.24	D1E8	10
4-Chlorotoluene	106-43-4	<0.700	20.0	0.700	ug/L	05.21.18 14.24	D1E8	10
4-Methyl-2-Pentanone	108-10-1	<2.00	50.0	2.00	ug/L	05.21.18 14.24	D1E8	10
Acetone	67-64-1	**759**	200	6.00	ug/L	05.21.18 14.24	D2	10
Benzene	71-43-2	<1.00	5.00	1.00	ug/L	05.21.18 14.24	D1E8	10
Bromobenzene	108-86-1	<0.900	15.0	0.900	ug/L	05.21.18 14.24	D1E8	10
Bromochloromethane	74-97-5	<2.00	5.00	2.00	ug/L	05.21.18 14.24	D1E8	10
Bromodichloromethane	75-27-4	<0.800	5.00	0.800	ug/L	05.21.18 14.24	D1E8	10
Bromoform	75-25-2	<1.00	10.0	1.00	ug/L	05.21.18 14.24	D1E8	10
Bromomethane	74-83-9	<3.00	50.0	3.00	ug/L	05.21.18 14.24	D1E8	10
Carbon Disulfide	75-15-0	<0.900	5.00	0.900	ug/L	05.21.18 14.24	D1E8	10
Carbon Tetrachloride	56-23-5	<2.00	5.00	2.00	ug/L	05.21.18 14.24	D1E8	10
Chlorobenzene	108-90-7	<0.700	5.00	0.700	ug/L	05.21.18 14.24	D1E8	10
Chloroethane	75-00-3	<6.00	40.0	6.00	ug/L	05.21.18 14.24	D1E8	10
Chloroform	67-66-3	<0.700	5.00	0.700	ug/L	05.21.18 14.24	D1E8	10

Certificate of Analytical Results 585543

AMEC Foster Wheeler, Phoenix, AZ

Cave Creek Landfill - Maricopa

Sample Id: **TSSV06-729-050718**
Lab Sample Id: 585543-012

Matrix: Water
Date Collected: 05.07.18 08.08

Date Received:05.10.18 14.10

Analytical Method: VOCs by SW 8260B
Tech: MNI
Analyst: MNI
Seq Number: 3051122

Date Prep: 05.21.18 10.31

Prep Method: SW5030C
% Solids:

Parameter	Cas Number	Result	RL	MDL	Units	Analysis Date	Flag	Dil
Chloromethane	74-87-3	<2.00	50.0	2.00	ug/L	05.21.18 14.24	D1E8	10
cis-1,2-Dichloroethene	156-59-2	<2.00	5.00	2.00	ug/L	05.21.18 14.24	D1E8	10
cis-1,3-Dichloropropene	10061-01-5	<0.800	10.0	0.800	ug/L	05.21.18 14.24	D1E8	10
Dibromochloromethane	124-48-1	<0.700	5.00	0.700	ug/L	05.21.18 14.24	D1E8	10
Dibromomethane	74-95-3	<2.00	5.00	2.00	ug/L	05.21.18 14.24	D1E8	10
Dichlorodifluoromethane	75-71-8	<2.00	20.0	2.00	ug/L	05.21.18 14.24	D1E8	10
Ethylbenzene	100-41-4	<0.900	20.0	0.900	ug/L	05.21.18 14.24	D1E8	10
Hexachlorobutadiene	87-68-3	<2.00	50.0	2.00	ug/L	05.21.18 14.24	D1E8	10
Iodomethane (Methyl Iodide)	74-88-4	<3.00	20.0	3.00	ug/L	05.21.18 14.24	D1E8	10
isopropylbenzene	98-82-8	<0.800	25.0	0.800	ug/L	05.21.18 14.24	D1E8	10
m,p-Xylenes	179601-23-1	<0.900	20.0	0.900	ug/L	05.21.18 14.24	D1E8	10
Methylene Chloride	75-09-2	<2.00	30.0	2.00	ug/L	05.21.18 14.24	D1E8	10
MTBE	1634-04-4	<1.00	20.0	1.00	ug/L	05.21.18 14.24	D1E8	10
Naphthalene	91-20-3	<2.00	50.0	2.00	ug/L	05.21.18 14.24	D1E8	10
n-Butylbenzene	104-51-8	<2.00	25.0	2.00	ug/L	05.21.18 14.24	D1E8	10
n-Propylbenzene	103-65-1	<0.800	20.0	0.800	ug/L	05.21.18 14.24	D1E8	10
o-Xylene	95-47-6	<0.900	10.0	0.900	ug/L	05.21.18 14.24	D1E8	10
p-Cymene (p-Isopropyltoluene)	99-87-6	<1.00	15.0	1.00	ug/L	05.21.18 14.24	D1E8	10
Sec-Butylbenzene	135-98-8	<1.00	15.0	1.00	ug/L	05.21.18 14.24	D1E8	10
Styrene	100-42-5	<0.800	10.0	0.800	ug/L	05.21.18 14.24	D1E8	10
tert-Butylbenzene	98-06-6	<2.00	25.0	2.00	ug/L	05.21.18 14.24	D1E8	10
Tetrachloroethylene	127-18-4	<0.800	5.00	0.800	ug/L	05.21.18 14.24	D1E8	10
Toluene	108-88-3	<0.700	20.0	0.700	ug/L	05.21.18 14.24	D1E8	10
Total Trihalomethane		<0.700	5.00	0.700	ug/L	05.21.18 14.24	D1E8	10
Total Xylenes	1330-20-7	<0.900	10.0	0.900	ug/L	05.21.18 14.24	D1E8	10
trans-1,2-dichloroethene	156-60-5	<0.900	5.00	0.900	ug/L	05.21.18 14.24	D1E8	10
Trichloroethene	79-01-6	**5.20**	5.00	2.00	ug/L	05.21.18 14.24	D2	10
Trichlorofluoromethane	75-69-4	<4.00	20.0	4.00	ug/L	05.21.18 14.24	D1E8	10
Vinyl Acetate	108-05-4	<2.00	50.0	2.00	ug/L	05.21.18 14.24	D1E8	10
Vinyl Chloride	75-01-4	<1.00	5.00	1.00	ug/L	05.21.18 14.24	D1E8	10
trans-1,3-dichloropropene	10061-02-6	<0.600	5.00	0.600	ug/L	05.21.18 14.24	D1E8	10
1,1,2-Trichloro-1,2,2-Trifluoroethane	76-13-1	<3.00	50.0	3.00	ug/L	05.21.18 14.24	D1E8	10
1,3-Butadiene	106-99-0	<2.76	50.0	2.76	ug/L	05.21.18 14.24	D1E8	10
Cyclohexane	110-82-7	<1.15	50.0	1.15	ug/L	05.21.18 14.24	D1E8	10
Dicyclopentadiene	77-73-6	<0.540	50.0	0.540	ug/L	05.21.18 14.24	D1E8	10
Methylcyclohexane	108-87-2	<1.17	50.0	1.17	ug/L	05.21.18 14.24	D1E8	10
n-Hexane	110-54-3	<0.920	50.0	0.920	ug/L	05.21.18 14.24	D1E8	10
4-Ethyltoluene	622-96-8	Not Present			ug/L	05.21.18 14.24	T4E8	10

Final 1.000

Certificate of Analytical Results 585543

AMEC Foster Wheeler, Phoenix, AZ

Cave Creek Landfill - Maricopa

Sample Id: **TSSV06-729-050718**
Lab Sample Id: 585543-012

Matrix: Water
Date Collected: 05.07.18 08.08

Date Received: 05.10.18 14.10

Analytical Method: VOCs by SW 8260B
Tech: MNI
Analyst: MNI
Seq Number: 3051122

Date Prep: 05.21.18 10.31

Prep Method: SW5030C
% Solids:

Parameter	Cas Number	Result	RL	MDL	Units	Analysis Date	Flag	Dil
Propene	115-07-1	Not Present			ug/L	05.21.18 14.24	T4E8	10

Surrogate	% Recovery	Units	Limits	Analysis Date	Flag
4-Bromofluorobenzene	94	%	74-124	05.21.18 14.24	
Dibromofluoromethane	98	%	75-131	05.21.18 14.24	
1,2-Dichloroethane-D4	103	%	63-144	05.21.18 14.24	
Toluene-D8	98	%	80-117	05.21.18 14.24	

Certificate of Analytical Results 585543

AMEC Foster Wheeler, Phoenix, AZ

Cave Creek Landfill - Maricopa

Sample Id: **TSSV07-742-050818** Matrix: Water Date Received:05.10.18 14.10
Lab Sample Id: 585543-013 Date Collected: 05.08.18 07.45

Analytical Method: VOCs by SW 8260B Prep Method: SW5030C
Tech: MNI % Solids:
Analyst: MNI Date Prep: 05.22.18 12.55
Seq Number: 3050960

Parameter	Cas Number	Result	RL	MDL	Units	Analysis Date	Flag	Dil
1,1,1,2-Tetrachloroethane	630-20-6	<0.100	0.500	0.100	ug/L	05.22.18 17.02	E8	1
1,1,1-Trichloroethane	71-55-6	<0.200	0.500	0.200	ug/L	05.22.18 17.02	E8	1
1,1,2,2-Tetrachloroethane	79-34-5	<0.100	0.500	0.100	ug/L	05.22.18 17.02	E8	1
1,1,2-Trichloroethane	79-00-5	<0.0900	0.500	0.0900	ug/L	05.22.18 17.02	E8	1
1,1-Dichloroethane	75-34-3	<0.0700	0.500	0.0700	ug/L	05.22.18 17.02	E8	1
1,1-Dichloroethene	75-35-4	<0.200	0.500	0.200	ug/L	05.22.18 17.02	E8	1
1,1-Dichloropropene	563-58-6	<0.200	1.00	0.200	ug/L	05.22.18 17.02	E8	1
1,2,3-Trichlorobenzene	87-61-6	<0.200	5.00	0.200	ug/L	05.22.18 17.02	E8	1
1,2,3-Trichloropropane	96-18-4	<0.200	1.00	0.200	ug/L	05.22.18 17.02	E8	1
1,2,4-Trichlorobenzene	120-82-1	<0.0700	5.00	0.0700	ug/L	05.22.18 17.02	E8	1
1,2,4-Trimethylbenzene	95-63-6	<0.0700	2.00	0.0700	ug/L	05.22.18 17.02	E8	1
1,2-Dibromo-3-Chloropropane	96-12-8	<0.300	2.00	0.300	ug/L	05.22.18 17.02	L2E8	1
1,2-Dibromoethane	106-93-4	<0.200	0.500	0.200	ug/L	05.22.18 17.02	E8	1
1,2-Dichlorobenzene	95-50-1	<0.0800	1.50	0.0800	ug/L	05.22.18 17.02	E8	1
1,2-Dichloroethane	107-06-2	<0.100	0.500	0.100	ug/L	05.22.18 17.02	E8	1
1,2-Dichloropropane	78-87-5	<0.0900	0.500	0.0900	ug/L	05.22.18 17.02	E8	1
1,3,5-Trimethylbenzene	108-67-8	<0.0700	1.50	0.0700	ug/L	05.22.18 17.02	E8	1
1,3-Dichlorobenzene	541-73-1	<0.0600	1.50	0.0600	ug/L	05.22.18 17.02	E8	1
1,3-Dichloropropane	142-28-9	<0.0700	1.00	0.0700	ug/L	05.22.18 17.02	E8	1
1,4-Dichlorobenzene	106-46-7	<0.200	1.50	0.200	ug/L	05.22.18 17.02	E8	1
2,2-Dichloropropane	594-20-7	<0.200	0.500	0.200	ug/L	05.22.18 17.02	E8	1
2-Butanone	78-93-3	<0.300	5.00	0.300	ug/L	05.22.18 17.02	E8	1
2-Chlorotoluene	95-49-8	<0.0800	1.50	0.0800	ug/L	05.22.18 17.02	E8	1
2-Hexanone	591-78-6	<0.200	5.00	0.200	ug/L	05.22.18 17.02	E8	1
4-Chlorotoluene	106-43-4	<0.0700	2.00	0.0700	ug/L	05.22.18 17.02	E8	1
4-Methyl-2-Pentanone	108-10-1	<0.200	5.00	0.200	ug/L	05.22.18 17.02	E8	1
Acetone	67-64-1	**143**	20.0	0.600	ug/L	05.22.18 17.02		1
Benzene	71-43-2	<0.100	0.500	0.100	ug/L	05.22.18 17.02	E8	1
Bromobenzene	108-86-1	<0.0900	1.50	0.0900	ug/L	05.22.18 17.02	E8	1
Bromochloromethane	74-97-5	<0.200	0.500	0.200	ug/L	05.22.18 17.02	E8	1
Bromodichloromethane	75-27-4	<0.0800	0.500	0.0800	ug/L	05.22.18 17.02	E8	1
Bromoform	75-25-2	<0.100	1.00	0.100	ug/L	05.22.18 17.02	E8	1
Bromomethane	74-83-9	<0.300	5.00	0.300	ug/L	05.22.18 17.02	E8	1
Carbon Disulfide	75-15-0	<0.0900	0.500	0.0900	ug/L	05.22.18 17.02	E8	1
Carbon Tetrachloride	56-23-5	<0.200	0.500	0.200	ug/L	05.22.18 17.02	E8	1
Chlorobenzene	108-90-7	<0.0700	0.500	0.0700	ug/L	05.22.18 17.02	E8	1
Chloroethane	75-00-3	<0.600	4.00	0.600	ug/L	05.22.18 17.02	E8	1
Chloroform	67-66-3	<0.0700	0.500	0.0700	ug/L	05.22.18 17.02	E8	1

Certificate of Analytical Results 585543

AMEC Foster Wheeler, Phoenix, AZ

Cave Creek Landfill - Maricopa

Sample Id: **TSSV07-742-050818**
Lab Sample Id: 585543-013

Matrix: Water
Date Collected: 05.08.18 07.45

Date Received:05.10.18 14.10

Analytical Method: VOCs by SW 8260B
Tech: MNI
Analyst: MNI
Seq Number: 3050960

Date Prep: 05.22.18 12.55

Prep Method: SW5030C
% Solids:

Parameter	Cas Number	Result	RL	MDL	Units	Analysis Date	Flag	Dil
Chloromethane	74-87-3	**2.61**	5.00	0.200	ug/L	05.22.18 17.02	E4	1
cis-1,2-Dichloroethene	156-59-2	<0.200	0.500	0.200	ug/L	05.22.18 17.02	E8	1
cis-1,3-Dichloropropene	10061-01-5	<0.0800	1.00	0.0800	ug/L	05.22.18 17.02	E8	1
Dibromochloromethane	124-48-1	<0.0700	0.500	0.0700	ug/L	05.22.18 17.02	E8	1
Dibromomethane	74-95-3	<0.200	0.500	0.200	ug/L	05.22.18 17.02	E8	1
Dichlorodifluoromethane	75-71-8	<0.200	2.00	0.200	ug/L	05.22.18 17.02	L1E8	1
Ethylbenzene	100-41-4	<0.0900	2.00	0.0900	ug/L	05.22.18 17.02	E8	1
Hexachlorobutadiene	87-68-3	<0.200	5.00	0.200	ug/L	05.22.18 17.02	E8	1
Iodomethane (Methyl Iodide)	74-88-4	<0.300	2.00	0.300	ug/L	05.22.18 17.02	E8	1
isopropylbenzene	98-82-8	<0.0800	2.50	0.0800	ug/L	05.22.18 17.02	E8	1
m,p-Xylenes	179601-23-1	<0.0900	2.00	0.0900	ug/L	05.22.18 17.02	E8	1
Methylene Chloride	75-09-2	<0.200	3.00	0.200	ug/L	05.22.18 17.02	E8	1
MTBE	1634-04-4	<0.100	2.00	0.100	ug/L	05.22.18 17.02	E8	1
Naphthalene	91-20-3	<0.200	5.00	0.200	ug/L	05.22.18 17.02	E8	1
n-Butylbenzene	104-51-8	<0.200	2.50	0.200	ug/L	05.22.18 17.02	E8	1
n-Propylbenzene	103-65-1	<0.0800	2.00	0.0800	ug/L	05.22.18 17.02	E8	1
o-Xylene	95-47-6	<0.0900	1.00	0.0900	ug/L	05.22.18 17.02	E8	1
p-Cymene (p-Isopropyltoluene)	99-87-6	<0.100	1.50	0.100	ug/L	05.22.18 17.02	E8	1
Sec-Butylbenzene	135-98-8	<0.100	1.50	0.100	ug/L	05.22.18 17.02	E8	1
Styrene	100-42-5	<0.0800	1.00	0.0800	ug/L	05.22.18 17.02	E8	1
tert-Butylbenzene	98-06-6	<0.200	2.50	0.200	ug/L	05.22.18 17.02	E8	1
Tetrachloroethylene	127-18-4	<0.0800	0.500	0.0800	ug/L	05.22.18 17.02	E8	1
Toluene	108-88-3	<0.0700	2.00	0.0700	ug/L	05.22.18 17.02	E8	1
Total Trihalomethane		<0.0700	0.500	0.0700	ug/L	05.22.18 17.02	E8	1
Total Xylenes	1330-20-7	<0.0900	1.00	0.0900	ug/L	05.22.18 17.02	E8	1
trans-1,2-dichloroethene	156-60-5	<0.0900	0.500	0.0900	ug/L	05.22.18 17.02	E8	1
Trichloroethene	79-01-6	<0.200	0.500	0.200	ug/L	05.22.18 17.02	E8	1
Trichlorofluoromethane	75-69-4	<0.400	2.00	0.400	ug/L	05.22.18 17.02	N1E8	1
Vinyl Acetate	108-05-4	<0.200	5.00	0.200	ug/L	05.22.18 17.02	E8	1
Vinyl Chloride	75-01-4	<0.100	0.500	0.100	ug/L	05.22.18 17.02	E8	1
trans-1,3-dichloropropene	10061-02-6	<0.0600	0.500	0.0600	ug/L	05.22.18 17.02	E8	1
1,1,2-Trichloro-1,2,2-Trifluoroethane	76-13-1	<0.300	5.00	0.300	ug/L	05.22.18 17.02	E8	1
1,3-Butadiene	106-99-0	<0.276	5.00	0.276	ug/L	05.22.18 17.02	E8	1
Cyclohexane	110-82-7	<0.115	5.00	0.115	ug/L	05.22.18 17.02	E8	1
Dicyclopentadiene	77-73-6	<0.0540	5.00	0.0540	ug/L	05.22.18 17.02	E8	1
Methylcyclohexane	108-87-2	<0.117	5.00	0.117	ug/L	05.22.18 17.02	E8	1
n-Hexane	110-54-3	<0.0920	5.00	0.0920	ug/L	05.22.18 17.02	E8	1
4-Ethyltoluene	622-96-8	Not Present			ug/L	05.22.18 17.02	T4E8	1

Final 1.000

Certificate of Analytical Results 585543

AMEC Foster Wheeler, Phoenix, AZ

Cave Creek Landfill - Maricopa

Sample Id: **TSSV07-742-050818**
Lab Sample Id: 585543-013

Matrix: Water
Date Collected: 05.08.18 07.45

Date Received: 05.10.18 14.10

Analytical Method: VOCs by SW 8260B
Tech: MNI
Analyst: MNI
Seq Number: 3050960

Date Prep: 05.22.18 12.55

Prep Method: SW5030C
% Solids:

Parameter	Cas Number	Result	RL	MDL	Units	Analysis Date	Flag	Dil
Propene	115-07-1	Not Present			ug/L	05.22.18 17.02	T4E8	1

Surrogate	% Recovery	Units	Limits	Analysis Date	Flag
4-Bromofluorobenzene	93	%	74-124	05.22.18 17.02	
Dibromofluoromethane	89	%	75-131	05.22.18 17.02	
1,2-Dichloroethane-D4	92	%	63-144	05.22.18 17.02	
Toluene-D8	96	%	80-117	05.22.18 17.02	

Certificate of Analytical Results 585543

AMEC Foster Wheeler, Phoenix, AZ

Cave Creek Landfill - Maricopa

Sample Id: **EW01-712-050718**
Lab Sample Id: 585543-014

Matrix: Water
Date Collected: 05.07.18 09.10

Date Received:05.10.18 14.10

Analytical Method: VOCs by SW 8260B
Tech: MNI
Analyst: MNI
Seq Number: 3051122

Date Prep: 05.21.18 10.31

Prep Method: SW5030C
% Solids:

Parameter	Cas Number	Result	RL	MDL	Units	Analysis Date	Flag	Dil
1,1,1,2-Tetrachloroethane	630-20-6	<0.100	0.500	0.100	ug/L	05.21.18 14.50	E8	1
1,1,1-Trichloroethane	71-55-6	<0.200	0.500	0.200	ug/L	05.21.18 14.50	E8	1
1,1,2,2-Tetrachloroethane	79-34-5	<0.100	0.500	0.100	ug/L	05.21.18 14.50	E8	1
1,1,2-Trichloroethane	79-00-5	<0.0900	0.500	0.0900	ug/L	05.21.18 14.50	E8	1
1,1-Dichloroethane	75-34-3	<0.0700	0.500	0.0700	ug/L	05.21.18 14.50	E8	1
1,1-Dichloroethene	75-35-4	<0.200	0.500	0.200	ug/L	05.21.18 14.50	E8	1
1,1-Dichloropropene	563-58-6	<0.200	1.00	0.200	ug/L	05.21.18 14.50	E8	1
1,2,3-Trichlorobenzene	87-61-6	<0.200	5.00	0.200	ug/L	05.21.18 14.50	E8	1
1,2,3-Trichloropropane	96-18-4	<0.200	1.00	0.200	ug/L	05.21.18 14.50	E8	1
1,2,4-Trichlorobenzene	120-82-1	<0.0700	5.00	0.0700	ug/L	05.21.18 14.50	E8	1
1,2,4-Trimethylbenzene	95-63-6	<0.0700	2.00	0.0700	ug/L	05.21.18 14.50	E8	1
1,2-Dibromo-3-Chloropropane	96-12-8	<0.300	2.00	0.300	ug/L	05.21.18 14.50	E8	1
1,2-Dibromoethane	106-93-4	<0.200	0.500	0.200	ug/L	05.21.18 14.50	E8	1
1,2-Dichlorobenzene	95-50-1	<0.0800	1.50	0.0800	ug/L	05.21.18 14.50	E8	1
1,2-Dichloroethane	107-06-2	<0.100	0.500	0.100	ug/L	05.21.18 14.50	E8	1
1,2-Dichloropropane	78-87-5	<0.0900	0.500	0.0900	ug/L	05.21.18 14.50	E8	1
1,3,5-Trimethylbenzene	108-67-8	<0.0700	1.50	0.0700	ug/L	05.21.18 14.50	E8	1
1,3-Dichlorobenzene	541-73-1	<0.0600	1.50	0.0600	ug/L	05.21.18 14.50	E8	1
1,3-Dichloropropane	142-28-9	<0.0700	1.00	0.0700	ug/L	05.21.18 14.50	E8	1
1,4-Dichlorobenzene	106-46-7	<0.200	1.50	0.200	ug/L	05.21.18 14.50	E8	1
2,2-Dichloropropane	594-20-7	<0.200	0.500	0.200	ug/L	05.21.18 14.50	L2E8	1
2-Butanone	78-93-3	<0.300	5.00	0.300	ug/L	05.21.18 14.50	E8	1
2-Chlorotoluene	95-49-8	<0.0800	1.50	0.0800	ug/L	05.21.18 14.50	E8	1
2-Hexanone	591-78-6	<0.200	5.00	0.200	ug/L	05.21.18 14.50	E8	1
4-Chlorotoluene	106-43-4	<0.0700	2.00	0.0700	ug/L	05.21.18 14.50	E8	1
4-Methyl-2-Pentanone	108-10-1	<0.200	5.00	0.200	ug/L	05.21.18 14.50	E8	1
Acetone	67-64-1	**132**	20.0	0.600	ug/L	05.21.18 14.50		1
Benzene	71-43-2	<0.100	0.500	0.100	ug/L	05.21.18 14.50	E8	1
Bromobenzene	108-86-1	<0.0900	1.50	0.0900	ug/L	05.21.18 14.50	E8	1
Bromochloromethane	74-97-5	<0.200	0.500	0.200	ug/L	05.21.18 14.50	E8	1
Bromodichloromethane	75-27-4	<0.0800	0.500	0.0800	ug/L	05.21.18 14.50	E8	1
Bromoform	75-25-2	<0.100	1.00	0.100	ug/L	05.21.18 14.50	E8	1
Bromomethane	74-83-9	<0.300	5.00	0.300	ug/L	05.21.18 14.50	E8	1
Carbon Disulfide	75-15-0	<0.0900	0.500	0.0900	ug/L	05.21.18 14.50	E8	1
Carbon Tetrachloride	56-23-5	<0.200	0.500	0.200	ug/L	05.21.18 14.50	E8	1
Chlorobenzene	108-90-7	<0.0700	0.500	0.0700	ug/L	05.21.18 14.50	E8	1
Chloroethane	75-00-3	<0.600	4.00	0.600	ug/L	05.21.18 14.50	E8	1
Chloroform	67-66-3	<0.0700	0.500	0.0700	ug/L	05.21.18 14.50	E8	1

Certificate of Analytical Results 585543

AMEC Foster Wheeler, Phoenix, AZ

Cave Creek Landfill - Maricopa

Sample Id: **EW01-712-050718** Matrix: Water Date Received:05.10.18 14.10
Lab Sample Id: 585543-014 Date Collected: 05.07.18 09.10

Analytical Method: VOCs by SW 8260B Prep Method: SW5030C
Tech: MNI % Solids:
Analyst: MNI Date Prep: 05.21.18 10.31
Seq Number: 3051122

Parameter	Cas Number	Result	RL	MDL	Units	Analysis Date	Flag	Dil
Chloromethane	74-87-3	<0.200	5.00	0.200	ug/L	05.21.18 14.50	E8	1
cis-1,2-Dichloroethene	156-59-2	<0.200	0.500	0.200	ug/L	05.21.18 14.50	E8	1
cis-1,3-Dichloropropene	10061-01-5	<0.0800	1.00	0.0800	ug/L	05.21.18 14.50	E8	1
Dibromochloromethane	124-48-1	<0.0700	0.500	0.0700	ug/L	05.21.18 14.50	E8	1
Dibromomethane	74-95-3	<0.200	0.500	0.200	ug/L	05.21.18 14.50	E8	1
Dichlorodifluoromethane	75-71-8	<0.200	2.00	0.200	ug/L	05.21.18 14.50	E8	1
Ethylbenzene	100-41-4	<0.0900	2.00	0.0900	ug/L	05.21.18 14.50	E8	1
Hexachlorobutadiene	87-68-3	<0.200	5.00	0.200	ug/L	05.21.18 14.50	E8	1
Iodomethane (Methyl Iodide)	74-88-4	<0.300	2.00	0.300	ug/L	05.21.18 14.50	E8	1
isopropylbenzene	98-82-8	<0.0800	2.50	0.0800	ug/L	05.21.18 14.50	E8	1
m,p-Xylenes	179601-23-1	<0.0900	2.00	0.0900	ug/L	05.21.18 14.50	E8	1
Methylene Chloride	75-09-2	<0.200	3.00	0.200	ug/L	05.21.18 14.50	E8	1
MTBE	1634-04-4	<0.100	2.00	0.100	ug/L	05.21.18 14.50	E8	1
Naphthalene	91-20-3	<0.200	5.00	0.200	ug/L	05.21.18 14.50	E8	1
n-Butylbenzene	104-51-8	<0.200	2.50	0.200	ug/L	05.21.18 14.50	E8	1
n-Propylbenzene	103-65-1	<0.0800	2.00	0.0800	ug/L	05.21.18 14.50	E8	1
o-Xylene	95-47-6	<0.0900	1.00	0.0900	ug/L	05.21.18 14.50	E8	1
p-Cymene (p-Isopropyltoluene)	99-87-6	<0.100	1.50	0.100	ug/L	05.21.18 14.50	E8	1
Sec-Butylbenzene	135-98-8	<0.100	1.50	0.100	ug/L	05.21.18 14.50	E8	1
Styrene	100-42-5	<0.0800	1.00	0.0800	ug/L	05.21.18 14.50	E8	1
tert-Butylbenzene	98-06-6	<0.200	2.50	0.200	ug/L	05.21.18 14.50	E8	1
Tetrachloroethylene	127-18-4	<0.0800	0.500	0.0800	ug/L	05.21.18 14.50	E8	1
Toluene	108-88-3	<0.0700	2.00	0.0700	ug/L	05.21.18 14.50	E8	1
Total Trihalomethane		<0.0700	0.500	0.0700	ug/L	05.21.18 14.50	E8	1
Total Xylenes	1330-20-7	<0.0900	1.00	0.0900	ug/L	05.21.18 14.50	E8	1
trans-1,2-dichloroethene	156-60-5	<0.0900	0.500	0.0900	ug/L	05.21.18 14.50	E8	1
Trichloroethene	79-01-6	**3.30**	0.500	0.200	ug/L	05.21.18 14.50		1
Trichlorofluoromethane	75-69-4	<0.400	2.00	0.400	ug/L	05.21.18 14.50	E8	1
Vinyl Acetate	108-05-4	<0.200	5.00	0.200	ug/L	05.21.18 14.50	E8	1
Vinyl Chloride	75-01-4	<0.100	0.500	0.100	ug/L	05.21.18 14.50	E8	1
trans-1,3-dichloropropene	10061-02-6	<0.0600	0.500	0.0600	ug/L	05.21.18 14.50	E8	1
1,1,2-Trichloro-1,2,2-Trifluoroethane	76-13-1	<0.300	5.00	0.300	ug/L	05.21.18 14.50	E8	1
1,3-Butadiene	106-99-0	<0.276	5.00	0.276	ug/L	05.21.18 14.50	E8	1
Cyclohexane	110-82-7	<0.115	5.00	0.115	ug/L	05.21.18 14.50	E8	1
Dicyclopentadiene	77-73-6	<0.0540	5.00	0.0540	ug/L	05.21.18 14.50	E8	1
Methylcyclohexane	108-87-2	<0.117	5.00	0.117	ug/L	05.21.18 14.50	E8	1
n-Hexane	110-54-3	<0.0920	5.00	0.0920	ug/L	05.21.18 14.50	E8	1
4-Ethyltoluene	622-96-8	Not Present			ug/L	05.21.18 14.50	T4E8	1

Certificate of Analytical Results 585543

AMEC Foster Wheeler, Phoenix, AZ

Cave Creek Landfill - Maricopa

Sample Id: **EW01-712-050718**
Lab Sample Id: 585543-014

Matrix: Water
Date Collected: 05.07.18 09.10

Date Received: 05.10.18 14.10

Analytical Method: VOCs by SW 8260B
Tech: MNI
Analyst: MNI
Seq Number: 3051122

Date Prep: 05.21.18 10.31

Prep Method: SW5030C
% Solids:

Parameter	Cas Number	Result	RL	MDL	Units	Analysis Date	Flag	Dil
Propene	115-07-1	Not Present			ug/L	05.21.18 14.50	T4E8	1

Surrogate	% Recovery	Units	Limits	Analysis Date	Flag
4-Bromofluorobenzene	97	%	74-124	05.21.18 14.50	
Dibromofluoromethane	101	%	75-131	05.21.18 14.50	
1,2-Dichloroethane-D4	102	%	63-144	05.21.18 14.50	
Toluene-D8	100	%	80-117	05.21.18 14.50	

Certificate of Analytical Results 585543

AMEC Foster Wheeler, Phoenix, AZ

Cave Creek Landfill - Maricopa

Sample Id: **MW09-718-050918**
Lab Sample Id: 585543-015

Matrix: Water
Date Collected: 05.09.18 10.55

Date Received:05.10.18 14.10

Analytical Method: VOCs by SW 8260B
Tech: MNI
Analyst: MNI
Seq Number: 3050960

Date Prep: 05.22.18 12.55

Prep Method: SW5030C
% Solids:

Parameter	Cas Number	Result	RL	MDL	Units	Analysis Date	Flag	Dil
1,1,1,2-Tetrachloroethane	630-20-6	<0.100	0.500	0.100	ug/L	05.22.18 19.34	E8	1
1,1,1-Trichloroethane	71-55-6	<0.200	0.500	0.200	ug/L	05.22.18 19.34	E8	1
1,1,2,2-Tetrachloroethane	79-34-5	<0.100	0.500	0.100	ug/L	05.22.18 19.34	E8	1
1,1,2-Trichloroethane	79-00-5	<0.0900	0.500	0.0900	ug/L	05.22.18 19.34	E8	1
1,1-Dichloroethane	75-34-3	<0.0700	0.500	0.0700	ug/L	05.22.18 19.34	E8	1
1,1-Dichloroethene	75-35-4	<0.200	0.500	0.200	ug/L	05.22.18 19.34	E8	1
1,1-Dichloropropene	563-58-6	<0.200	1.00	0.200	ug/L	05.22.18 19.34	E8	1
1,2,3-Trichlorobenzene	87-61-6	<0.200	5.00	0.200	ug/L	05.22.18 19.34	E8	1
1,2,3-Trichloropropane	96-18-4	<0.200	1.00	0.200	ug/L	05.22.18 19.34	E8	1
1,2,4-Trichlorobenzene	120-82-1	<0.0700	5.00	0.0700	ug/L	05.22.18 19.34	E8	1
1,2,4-Trimethylbenzene	95-63-6	<0.0700	2.00	0.0700	ug/L	05.22.18 19.34	E8	1
1,2-Dibromo-3-Chloropropane	96-12-8	<0.300	2.00	0.300	ug/L	05.22.18 19.34	L2E8	1
1,2-Dibromoethane	106-93-4	<0.200	0.500	0.200	ug/L	05.22.18 19.34	E8	1
1,2-Dichlorobenzene	95-50-1	<0.0800	1.50	0.0800	ug/L	05.22.18 19.34	E8	1
1,2-Dichloroethane	107-06-2	<0.100	0.500	0.100	ug/L	05.22.18 19.34	E8	1
1,2-Dichloropropane	78-87-5	<0.0900	0.500	0.0900	ug/L	05.22.18 19.34	E8	1
1,3,5-Trimethylbenzene	108-67-8	<0.0700	1.50	0.0700	ug/L	05.22.18 19.34	E8	1
1,3-Dichlorobenzene	541-73-1	<0.0600	1.50	0.0600	ug/L	05.22.18 19.34	E8	1
1,3-Dichloropropane	142-28-9	<0.0700	1.00	0.0700	ug/L	05.22.18 19.34	E8	1
1,4-Dichlorobenzene	106-46-7	<0.200	1.50	0.200	ug/L	05.22.18 19.34	E8	1
2,2-Dichloropropane	594-20-7	<0.200	0.500	0.200	ug/L	05.22.18 19.34	E8	1
2-Butanone	78-93-3	<0.300	5.00	0.300	ug/L	05.22.18 19.34	E8	1
2-Chlorotoluene	95-49-8	<0.0800	1.50	0.0800	ug/L	05.22.18 19.34	E8	1
2-Hexanone	591-78-6	<0.200	5.00	0.200	ug/L	05.22.18 19.34	E8	1
4-Chlorotoluene	106-43-4	<0.0700	2.00	0.0700	ug/L	05.22.18 19.34	E8	1
4-Methyl-2-Pentanone	108-10-1	<0.200	5.00	0.200	ug/L	05.22.18 19.34	E8	1
Acetone	67-64-1	**50.3**	20.0	0.600	ug/L	05.22.18 19.34		1
Benzene	71-43-2	<0.100	0.500	0.100	ug/L	05.22.18 19.34	E8	1
Bromobenzene	108-86-1	<0.0900	1.50	0.0900	ug/L	05.22.18 19.34	E8	1
Bromochloromethane	74-97-5	<0.200	0.500	0.200	ug/L	05.22.18 19.34	E8	1
Bromodichloromethane	75-27-4	<0.0800	0.500	0.0800	ug/L	05.22.18 19.34	E8	1
Bromoform	75-25-2	<0.100	1.00	0.100	ug/L	05.22.18 19.34	E8	1
Bromomethane	74-83-9	<0.300	5.00	0.300	ug/L	05.22.18 19.34	E8	1
Carbon Disulfide	75-15-0	<0.0900	0.500	0.0900	ug/L	05.22.18 19.34	E8	1
Carbon Tetrachloride	56-23-5	<0.200	0.500	0.200	ug/L	05.22.18 19.34	E8	1
Chlorobenzene	108-90-7	<0.0700	0.500	0.0700	ug/L	05.22.18 19.34	E8	1
Chloroethane	75-00-3	<0.600	4.00	0.600	ug/L	05.22.18 19.34	E8	1
Chloroform	67-66-3	<0.0700	0.500	0.0700	ug/L	05.22.18 19.34	E8	1

Certificate of Analytical Results 585543

AMEC Foster Wheeler, Phoenix, AZ

Cave Creek Landfill - Maricopa

Sample Id: **MW09-718-050918**
Lab Sample Id: 585543-015

Matrix: Water
Date Collected: 05.09.18 10.55

Date Received:05.10.18 14.10

Analytical Method: VOCs by SW 8260B
Tech: MNI
Analyst: MNI
Seq Number: 3050960

Date Prep: 05.22.18 12.55

Prep Method: SW5030C
% Solids:

Parameter	Cas Number	Result	RL	MDL	Units	Analysis Date	Flag	Dil
Chloromethane	74-87-3	<0.200	5.00	0.200	ug/L	05.22.18 19.34	E8	1
cis-1,2-Dichloroethene	156-59-2	<0.200	0.500	0.200	ug/L	05.22.18 19.34	E8	1
cis-1,3-Dichloropropene	10061-01-5	<0.0800	1.00	0.0800	ug/L	05.22.18 19.34	E8	1
Dibromochloromethane	124-48-1	<0.0700	0.500	0.0700	ug/L	05.22.18 19.34	E8	1
Dibromomethane	74-95-3	<0.200	0.500	0.200	ug/L	05.22.18 19.34	E8	1
Dichlorodifluoromethane	75-71-8	<0.200	2.00	0.200	ug/L	05.22.18 19.34	L1E8	1
Ethylbenzene	100-41-4	<0.0900	2.00	0.0900	ug/L	05.22.18 19.34	E8	1
Hexachlorobutadiene	87-68-3	<0.200	5.00	0.200	ug/L	05.22.18 19.34	E8	1
Iodomethane (Methyl Iodide)	74-88-4	<0.300	2.00	0.300	ug/L	05.22.18 19.34	E8	1
isopropylbenzene	98-82-8	<0.0800	2.50	0.0800	ug/L	05.22.18 19.34	E8	1
m,p-Xylenes	179601-23-1	<0.0900	2.00	0.0900	ug/L	05.22.18 19.34	E8	1
Methylene Chloride	75-09-2	<0.200	3.00	0.200	ug/L	05.22.18 19.34	E8	1
MTBE	1634-04-4	<0.100	2.00	0.100	ug/L	05.22.18 19.34	E8	1
Naphthalene	91-20-3	<0.200	5.00	0.200	ug/L	05.22.18 19.34	E8	1
n-Butylbenzene	104-51-8	<0.200	2.50	0.200	ug/L	05.22.18 19.34	E8	1
n-Propylbenzene	103-65-1	<0.0800	2.00	0.0800	ug/L	05.22.18 19.34	E8	1
o-Xylene	95-47-6	<0.0900	1.00	0.0900	ug/L	05.22.18 19.34	E8	1
p-Cymene (p-Isopropyltoluene)	99-87-6	<0.100	1.50	0.100	ug/L	05.22.18 19.34	E8	1
Sec-Butylbenzene	135-98-8	<0.100	1.50	0.100	ug/L	05.22.18 19.34	E8	1
Styrene	100-42-5	<0.0800	1.00	0.0800	ug/L	05.22.18 19.34	E8	1
tert-Butylbenzene	98-06-6	<0.200	2.50	0.200	ug/L	05.22.18 19.34	E8	1
Tetrachloroethylene	127-18-4	<0.0800	0.500	0.0800	ug/L	05.22.18 19.34	E8	1
Toluene	108-88-3	<0.0700	2.00	0.0700	ug/L	05.22.18 19.34	E8	1
Total Trihalomethane		<0.0700	0.500	0.0700	ug/L	05.22.18 19.34	E8	1
Total Xylenes	1330-20-7	<0.0900	1.00	0.0900	ug/L	05.22.18 19.34	E8	1
trans-1,2-dichloroethene	156-60-5	<0.0900	0.500	0.0900	ug/L	05.22.18 19.34	E8	1
Trichloroethene	79-01-6	**17.4**	0.500	0.200	ug/L	05.22.18 19.34		1
Trichlorofluoromethane	75-69-4	<0.400	2.00	0.400	ug/L	05.22.18 19.34	N1E8	1
Vinyl Acetate	108-05-4	<0.200	5.00	0.200	ug/L	05.22.18 19.34	E8	1
Vinyl Chloride	75-01-4	<0.100	0.500	0.100	ug/L	05.22.18 19.34	E8	1
trans-1,3-dichloropropene	10061-02-6	<0.0600	0.500	0.0600	ug/L	05.22.18 19.34	E8	1
1,1,2-Trichloro-1,2,2-Trifluoroethane	76-13-1	<0.300	5.00	0.300	ug/L	05.22.18 19.34	E8	1
1,3-Butadiene	106-99-0	<0.276	5.00	0.276	ug/L	05.22.18 19.34	E8	1
Cyclohexane	110-82-7	<0.115	5.00	0.115	ug/L	05.22.18 19.34	E8	1
Dicyclopentadiene	77-73-6	<0.0540	5.00	0.0540	ug/L	05.22.18 19.34	E8	1
Methylcyclohexane	108-87-2	<0.117	5.00	0.117	ug/L	05.22.18 19.34	E8	1
n-Hexane	110-54-3	<0.0920	5.00	0.0920	ug/L	05.22.18 19.34	E8	1
4-Ethyltoluene	622-96-8	Not Present			ug/L	05.22.18 19.34	T4E8	1

Final 1.000

Certificate of Analytical Results 585543

AMEC Foster Wheeler, Phoenix, AZ

Cave Creek Landfill - Maricopa

Sample Id: **MW09-718-050918**
Lab Sample Id: 585543-015

Matrix: Water
Date Collected: 05.09.18 10.55

Date Received:05.10.18 14.10

Analytical Method: VOCs by SW 8260B
Tech: MNI
Analyst: MNI
Seq Number: 3050960

Date Prep: 05.22.18 12.55

Prep Method: SW5030C
% Solids:

Parameter	Cas Number	Result	RL	MDL	Units	Analysis Date	Flag	Dil
Propene	115-07-1	Not Present			ug/L	05.22.18 19.34	T4E8	1

Surrogate	% Recovery	Units	Limits	Analysis Date	Flag
4-Bromofluorobenzene	102	%	74-124	05.22.18 19.34	
Dibromofluoromethane	98	%	75-131	05.22.18 19.34	
1,2-Dichloroethane-D4	100	%	63-144	05.22.18 19.34	
Toluene-D8	101	%	80-117	05.22.18 19.34	

Certificate of Analytical Results 585543

AMEC Foster Wheeler, Phoenix, AZ

Cave Creek Landfill - Maricopa

Sample Id: **MW10-704-050918** Matrix: Water Date Received:05.10.18 14.10
Lab Sample Id: 585543-016 Date Collected: 05.09.18 12.39

Analytical Method: VOCs by SW 8260B Prep Method: SW5030C
Tech: MNI % Solids:
Analyst: MNI Date Prep: 05.22.18 12.55
Seq Number: 3050960

Dilution Analysis:
Seq#: 3050960 Date Analyzed: 05/22/18 23:22 Date Prep: 05/22/18 12:55

Parameter	Cas Number	Result	RL	MDL	Units	Analysis Date	Flag	Dil
1,1,1,2-Tetrachloroethane	630-20-6	<0.100	0.500	0.100	ug/L	05.22.18 19.59	E8	1
1,1,1-Trichloroethane	71-55-6	<0.200	0.500	0.200	ug/L	05.22.18 19.59	E8	1
1,1,2,2-Tetrachloroethane	79-34-5	<0.100	0.500	0.100	ug/L	05.22.18 19.59	E8	1
1,1,2-Trichloroethane	79-00-5	<0.0900	0.500	0.0900	ug/L	05.22.18 19.59	E8	1
1,1-Dichloroethane	75-34-3	<0.0700	0.500	0.0700	ug/L	05.22.18 19.59	E8	1
1,1-Dichloroethene	75-35-4	<0.200	0.500	0.200	ug/L	05.22.18 19.59	E8	1
1,1-Dichloropropene	563-58-6	<0.200	1.00	0.200	ug/L	05.22.18 19.59	E8	1
1,2,3-Trichlorobenzene	87-61-6	<0.200	5.00	0.200	ug/L	05.22.18 19.59	E8	1
1,2,3-Trichloropropane	96-18-4	<0.200	1.00	0.200	ug/L	05.22.18 19.59	E8	1
1,2,4-Trichlorobenzene	120-82-1	<0.0700	5.00	0.0700	ug/L	05.22.18 19.59	E8	1
1,2,4-Trimethylbenzene	95-63-6	<0.0700	2.00	0.0700	ug/L	05.22.18 19.59	E8	1
1,2-Dibromo-3-Chloropropane	96-12-8	<0.300	2.00	0.300	ug/L	05.22.18 19.59	L2E8	1
1,2-Dibromoethane	106-93-4	<0.200	0.500	0.200	ug/L	05.22.18 19.59	E8	1
1,2-Dichlorobenzene	95-50-1	<0.0800	1.50	0.0800	ug/L	05.22.18 19.59	E8	1
1,2-Dichloroethane	107-06-2	<0.100	0.500	0.100	ug/L	05.22.18 19.59	E8	1
1,2-Dichloropropane	78-87-5	<0.0900	0.500	0.0900	ug/L	05.22.18 19.59	E8	1
1,3,5-Trimethylbenzene	108-67-8	<0.0700	1.50	0.0700	ug/L	05.22.18 19.59	E8	1
1,3-Dichlorobenzene	541-73-1	<0.0600	1.50	0.0600	ug/L	05.22.18 19.59	E8	1
1,3-Dichloropropane	142-28-9	<0.0700	1.00	0.0700	ug/L	05.22.18 19.59	E8	1
1,4-Dichlorobenzene	106-46-7	<0.200	1.50	0.200	ug/L	05.22.18 19.59	E8	1
2,2-Dichloropropane	594-20-7	<0.200	0.500	0.200	ug/L	05.22.18 19.59	E8	1
2-Butanone	78-93-3	<0.300	5.00	0.300	ug/L	05.22.18 19.59	E8	1
2-Chlorotoluene	95-49-8	<0.0800	1.50	0.0800	ug/L	05.22.18 19.59	E8	1
2-Hexanone	591-78-6	<0.200	5.00	0.200	ug/L	05.22.18 19.59	E8	1
4-Chlorotoluene	106-43-4	<0.0700	2.00	0.0700	ug/L	05.22.18 19.59	E8	1
4-Methyl-2-Pentanone	108-10-1	<0.200	5.00	0.200	ug/L	05.22.18 19.59	E8	1
Acetone	67-64-1	**45.6**	20.0	0.600	ug/L	05.22.18 19.59		1
Benzene	71-43-2	<0.100	0.500	0.100	ug/L	05.22.18 19.59	E8	1
Bromobenzene	108-86-1	<0.0900	1.50	0.0900	ug/L	05.22.18 19.59	E8	1
Bromochloromethane	74-97-5	<0.200	0.500	0.200	ug/L	05.22.18 19.59	E8	1
Bromodichloromethane	75-27-4	<0.0800	0.500	0.0800	ug/L	05.22.18 19.59	E8	1
Bromoform	75-25-2	<0.100	1.00	0.100	ug/L	05.22.18 19.59	E8	1
Bromomethane	74-83-9	<0.300	5.00	0.300	ug/L	05.22.18 19.59	E8	1
Carbon Disulfide	75-15-0	<0.0900	0.500	0.0900	ug/L	05.22.18 19.59	E8	1
Carbon Tetrachloride	56-23-5	<0.200	0.500	0.200	ug/L	05.22.18 19.59	E8	1

Certificate of Analytical Results 585543

AMEC Foster Wheeler, Phoenix, AZ

Cave Creek Landfill - Maricopa

Sample Id: **MW10-704-050918** Matrix: Water Date Received:05.10.18 14.10

Lab Sample Id: 585543-016 Date Collected: 05.09.18 12.39

Analytical Method: VOCs by SW 8260B Prep Method: SW5030C

Tech: MNI % Solids:

Analyst: MNI Date Prep: 05.22.18 12.55

Seq Number: 3050960

Dilution Analysis:

Seq#: 3050960 Date Analyzed: 05/22/18 23:22 Date Prep: 05/22/18 12:55

Parameter	Cas Number	Result	RL	MDL	Units	Analysis Date	Flag	Dil
Chlorobenzene	108-90-7	<0.0700	0.500	0.0700	ug/L	05.22.18 19.59	E8	1
Chloroethane	75-00-3	<0.600	4.00	0.600	ug/L	05.22.18 19.59	E8	1
Chloroform	67-66-3	**0.710**	0.500	0.0700	ug/L	05.22.18 19.59		1
Chloromethane	74-87-3	<0.200	5.00	0.200	ug/L	05.22.18 19.59	E8	1
cis-1,2-Dichloroethene	156-59-2	**16.5**	0.500	0.200	ug/L	05.22.18 19.59		1
cis-1,3-Dichloropropene	10061-01-5	<0.0800	1.00	0.0800	ug/L	05.22.18 19.59	E8	1
Dibromochloromethane	124-48-1	<0.0700	0.500	0.0700	ug/L	05.22.18 19.59	E8	1
Dibromomethane	74-95-3	<0.200	0.500	0.200	ug/L	05.22.18 19.59	E8	1
Dichlorodifluoromethane	75-71-8	<0.200	2.00	0.200	ug/L	05.22.18 19.59	L1E8	1
Ethylbenzene	100-41-4	<0.0900	2.00	0.0900	ug/L	05.22.18 19.59	E8	1
Hexachlorobutadiene	87-68-3	<0.200	5.00	0.200	ug/L	05.22.18 19.59	E8	1
Iodomethane (Methyl Iodide)	74-88-4	<0.300	2.00	0.300	ug/L	05.22.18 19.59	E8	1
isopropylbenzene	98-82-8	<0.0800	2.50	0.0800	ug/L	05.22.18 19.59	E8	1
m,p-Xylenes	179601-23-1	<0.0900	2.00	0.0900	ug/L	05.22.18 19.59	E8	1
Methylene Chloride	75-09-2	<0.200	3.00	0.200	ug/L	05.22.18 19.59	E8	1
MTBE	1634-04-4	<0.100	2.00	0.100	ug/L	05.22.18 19.59	E8	1
Naphthalene	91-20-3	<0.200	5.00	0.200	ug/L	05.22.18 19.59	E8	1
n-Butylbenzene	104-51-8	<0.200	2.50	0.200	ug/L	05.22.18 19.59	E8	1
n-Propylbenzene	103-65-1	<0.0800	2.00	0.0800	ug/L	05.22.18 19.59	E8	1
o-Xylene	95-47-6	<0.0900	1.00	0.0900	ug/L	05.22.18 19.59	E8	1
p-Cymene (p-Isopropyltoluene)	99-87-6	<0.100	1.50	0.100	ug/L	05.22.18 19.59	E8	1
Sec-Butylbenzene	135-98-8	<0.100	1.50	0.100	ug/L	05.22.18 19.59	E8	1
Styrene	100-42-5	<0.0800	1.00	0.0800	ug/L	05.22.18 19.59	E8	1
tert-Butylbenzene	98-06-6	<0.200	2.50	0.200	ug/L	05.22.18 19.59	E8	1
Tetrachloroethylene	127-18-4	**7.31**	0.500	0.0800	ug/L	05.22.18 19.59		1
Toluene	108-88-3	<0.0700	2.00	0.0700	ug/L	05.22.18 19.59	E8	1
Total Trihalomethane		**0.710**	0.500	0.0700	ug/L	05.22.18 19.59		1
Total Xylenes	1330-20-7	<0.0900	1.00	0.0900	ug/L	05.22.18 19.59	E8	1
trans-1,2-dichloroethene	156-60-5	<0.0900	0.500	0.0900	ug/L	05.22.18 19.59	E8	1
Trichloroethene	79-01-6	**298**	5.00	2.00	ug/L	05.22.18 23.22	D2	10
Trichlorofluoromethane	75-69-4	<0.400	2.00	0.400	ug/L	05.22.18 19.59	N1E8	1
Vinyl Acetate	108-05-4	<0.200	5.00	0.200	ug/L	05.22.18 19.59	E8	1
Vinyl Chloride	75-01-4	<0.100	0.500	0.100	ug/L	05.22.18 19.59	E8	1
trans-1,3-dichloropropene	10061-02-6	<0.0600	0.500	0.0600	ug/L	05.22.18 19.59	E8	1
1,1,2-Trichloro-1,2,2-Trifluoroethane	76-13-1	<0.300	5.00	0.300	ug/L	05.22.18 19.59	E8	1

Certificate of Analytical Results 585543

AMEC Foster Wheeler, Phoenix, AZ

Cave Creek Landfill - Maricopa

Sample Id: **MW10-704-050918** Matrix: Water Date Received:05.10.18 14.10
Lab Sample Id: 585543-016 Date Collected: 05.09.18 12.39

Analytical Method: VOCs by SW 8260B Prep Method: SW5030C
Tech: MNI % Solids:
Analyst: MNI Date Prep: 05.22.18 12.55
Seq Number: 3050960

Dilution Analysis:
Seq#: 3050960 Date Analyzed: 05/22/18 23:22 Date Prep: 05/22/18 12:55

Parameter	Cas Number	Result	RL	MDL	Units	Analysis Date	Flag	Dil
1,3-Butadiene	106-99-0	<0.276	5.00	0.276	ug/L	05.22.18 19.59	E8	1
Cyclohexane	110-82-7	<0.115	5.00	0.115	ug/L	05.22.18 19.59	E8	1
Dicyclopentadiene	77-73-6	<0.0540	5.00	0.0540	ug/L	05.22.18 19.59	E8	1
Methylcyclohexane	108-87-2	<0.117	5.00	0.117	ug/L	05.22.18 19.59	E8	1
n-Hexane	110-54-3	<0.0920	5.00	0.0920	ug/L	05.22.18 19.59	E8	1
4-Ethyltoluene	622-96-8	Not Present			ug/L	05.22.18 19.59	T4E8	1
Propene	115-07-1	Not Present			ug/L	05.22.18 19.59	T4E8	1

Surrogate	% Recovery	Units	Limits	Analysis Date	Flag
4-Bromofluorobenzene	89	%	74-124	05.22.18 19.59	
Dibromofluoromethane	85	%	75-131	05.22.18 19.59	
1,2-Dichloroethane-D4	86	%	63-144	05.22.18 19.59	
Toluene-D8	89	%	80-117	05.22.18 19.59	

Certificate of Analytical Results 585543

AMEC Foster Wheeler, Phoenix, AZ

Cave Creek Landfill - Maricopa

Sample Id: **DUP01-050718**
Lab Sample Id: 585543-017

Matrix: Water
Date Collected: 05.07.18 15.05

Date Received:05.10.18 14.10

Analytical Method: VOCs by SW 8260B
Tech: MNI
Analyst: MNI
Seq Number: 3051122

Date Prep: 05.21.18 10.31

Prep Method: SW5030C
% Solids:

Parameter	Cas Number	Result	RL	MDL	Units	Analysis Date	Flag	Dil
1,1,1,2-Tetrachloroethane	630-20-6	<0.500	2.50	0.500	ug/L	05.21.18 15.16	D1E8	5
1,1,1-Trichloroethane	71-55-6	<1.00	2.50	1.00	ug/L	05.21.18 15.16	D1E8	5
1,1,2,2-Tetrachloroethane	79-34-5	<0.500	2.50	0.500	ug/L	05.21.18 15.16	D1E8	5
1,1,2-Trichloroethane	79-00-5	<0.450	2.50	0.450	ug/L	05.21.18 15.16	D1E8	5
1,1-Dichloroethane	75-34-3	<0.350	2.50	0.350	ug/L	05.21.18 15.16	D1E8	5
1,1-Dichloroethene	75-35-4	<1.00	2.50	1.00	ug/L	05.21.18 15.16	D1E8	5
1,1-Dichloropropene	563-58-6	<1.00	5.00	1.00	ug/L	05.21.18 15.16	D1E8	5
1,2,3-Trichlorobenzene	87-61-6	<1.00	25.0	1.00	ug/L	05.21.18 15.16	D1E8	5
1,2,3-Trichloropropane	96-18-4	<1.00	5.00	1.00	ug/L	05.21.18 15.16	D1E8	5
1,2,4-Trichlorobenzene	120-82-1	<0.350	25.0	0.350	ug/L	05.21.18 15.16	D1E8	5
1,2,4-Trimethylbenzene	95-63-6	<0.350	10.0	0.350	ug/L	05.21.18 15.16	D1E8	5
1,2-Dibromo-3-Chloropropane	96-12-8	<1.50	10.0	1.50	ug/L	05.21.18 15.16	D1E8	5
1,2-Dibromoethane	106-93-4	<1.00	2.50	1.00	ug/L	05.21.18 15.16	D1E8	5
1,2-Dichlorobenzene	95-50-1	<0.400	7.50	0.400	ug/L	05.21.18 15.16	D1E8	5
1,2-Dichloroethane	107-06-2	<0.500	2.50	0.500	ug/L	05.21.18 15.16	D1E8	5
1,2-Dichloropropane	78-87-5	<0.450	2.50	0.450	ug/L	05.21.18 15.16	D1E8	5
1,3,5-Trimethylbenzene	108-67-8	<0.350	7.50	0.350	ug/L	05.21.18 15.16	D1E8	5
1,3-Dichlorobenzene	541-73-1	<0.300	7.50	0.300	ug/L	05.21.18 15.16	D1E8	5
1,3-Dichloropropane	142-28-9	<0.350	5.00	0.350	ug/L	05.21.18 15.16	D1E8	5
1,4-Dichlorobenzene	106-46-7	<1.00	7.50	1.00	ug/L	05.21.18 15.16	D1E8	5
2,2-Dichloropropane	594-20-7	<1.00	2.50	1.00	ug/L	05.21.18 15.16	L2E8D1	5
2-Butanone	78-93-3	<1.50	25.0	1.50	ug/L	05.21.18 15.16	D1E8	5
2-Chlorotoluene	95-49-8	<0.400	7.50	0.400	ug/L	05.21.18 15.16	D1E8	5
2-Hexanone	591-78-6	<1.00	25.0	1.00	ug/L	05.21.18 15.16	D1E8	5
4-Chlorotoluene	106-43-4	<0.350	10.0	0.350	ug/L	05.21.18 15.16	D1E8	5
4-Methyl-2-Pentanone	108-10-1	<1.00	25.0	1.00	ug/L	05.21.18 15.16	D1E8	5
Acetone	67-64-1	**110**	100	3.00	ug/L	05.21.18 15.16	D2	5
Benzene	71-43-2	<0.500	2.50	0.500	ug/L	05.21.18 15.16	D1E8	5
Bromobenzene	108-86-1	<0.450	7.50	0.450	ug/L	05.21.18 15.16	D1E8	5
Bromochloromethane	74-97-5	<1.00	2.50	1.00	ug/L	05.21.18 15.16	D1E8	5
Bromodichloromethane	75-27-4	<0.400	2.50	0.400	ug/L	05.21.18 15.16	D1E8	5
Bromoform	75-25-2	<0.500	5.00	0.500	ug/L	05.21.18 15.16	D1E8	5
Bromomethane	74-83-9	<1.50	25.0	1.50	ug/L	05.21.18 15.16	D1E8	5
Carbon Disulfide	75-15-0	<0.450	2.50	0.450	ug/L	05.21.18 15.16	D1E8	5
Carbon Tetrachloride	56-23-5	<1.00	2.50	1.00	ug/L	05.21.18 15.16	D1E8	5
Chlorobenzene	108-90-7	<0.350	2.50	0.350	ug/L	05.21.18 15.16	D1E8	5
Chloroethane	75-00-3	<3.00	20.0	3.00	ug/L	05.21.18 15.16	D1E8	5
Chloroform	67-66-3	<0.350	2.50	0.350	ug/L	05.21.18 15.16	D1E8	5

Certificate of Analytical Results 585543

AMEC Foster Wheeler, Phoenix, AZ

Cave Creek Landfill - Maricopa

Sample Id: **DUP01-050718**
Lab Sample Id: 585543-017

Matrix: Water
Date Collected: 05.07.18 15.05

Date Received:05.10.18 14.10

Analytical Method: VOCs by SW 8260B
Tech: MNI
Analyst: MNI
Seq Number: 3051122

Date Prep: 05.21.18 10.31

Prep Method: SW5030C
% Solids:

Parameter	Cas Number	Result	RL	MDL	Units	Analysis Date	Flag	Dil
Chloromethane	74-87-3	<1.00	25.0	1.00	ug/L	05.21.18 15.16	D1E8	5
cis-1,2-Dichloroethene	156-59-2	<1.00	2.50	1.00	ug/L	05.21.18 15.16	D1E8	5
cis-1,3-Dichloropropene	10061-01-5	<0.400	5.00	0.400	ug/L	05.21.18 15.16	D1E8	5
Dibromochloromethane	124-48-1	<0.350	2.50	0.350	ug/L	05.21.18 15.16	D1E8	5
Dibromomethane	74-95-3	<1.00	2.50	1.00	ug/L	05.21.18 15.16	D1E8	5
Dichlorodifluoromethane	75-71-8	<1.00	10.0	1.00	ug/L	05.21.18 15.16	D1E8	5
Ethylbenzene	100-41-4	<0.450	10.0	0.450	ug/L	05.21.18 15.16	D1E8	5
Hexachlorobutadiene	87-68-3	<1.00	25.0	1.00	ug/L	05.21.18 15.16	D1E8	5
Iodomethane (Methyl Iodide)	74-88-4	<1.50	10.0	1.50	ug/L	05.21.18 15.16	D1E8	5
isopropylbenzene	98-82-8	<0.400	12.5	0.400	ug/L	05.21.18 15.16	D1E8	5
m,p-Xylenes	179601-23-1	<0.450	10.0	0.450	ug/L	05.21.18 15.16	D1E8	5
Methylene Chloride	75-09-2	<1.00	15.0	1.00	ug/L	05.21.18 15.16	D1E8	5
MTBE	1634-04-4	<0.500	10.0	0.500	ug/L	05.21.18 15.16	D1E8	5
Naphthalene	91-20-3	<1.00	25.0	1.00	ug/L	05.21.18 15.16	D1E8	5
n-Butylbenzene	104-51-8	<1.00	12.5	1.00	ug/L	05.21.18 15.16	D1E8	5
n-Propylbenzene	103-65-1	<0.400	10.0	0.400	ug/L	05.21.18 15.16	D1E8	5
o-Xylene	95-47-6	<0.450	5.00	0.450	ug/L	05.21.18 15.16	D1E8	5
p-Cymene (p-Isopropyltoluene)	99-87-6	<0.500	7.50	0.500	ug/L	05.21.18 15.16	D1E8	5
Sec-Butylbenzene	135-98-8	<0.500	7.50	0.500	ug/L	05.21.18 15.16	D1E8	5
Styrene	100-42-5	<0.400	5.00	0.400	ug/L	05.21.18 15.16	D1E8	5
tert-Butylbenzene	98-06-6	<1.00	12.5	1.00	ug/L	05.21.18 15.16	D1E8	5
Tetrachloroethylene	127-18-4	<0.400	2.50	0.400	ug/L	05.21.18 15.16	D1E8	5
Toluene	108-88-3	<0.350	10.0	0.350	ug/L	05.21.18 15.16	D1E8	5
Total Trihalomethane		<0.350	2.50	0.350	ug/L	05.21.18 15.16	D1E8	5
Total Xylenes	1330-20-7	<0.450	5.00	0.450	ug/L	05.21.18 15.16	D1E8	5
trans-1,2-dichloroethene	156-60-5	<0.450	2.50	0.450	ug/L	05.21.18 15.16	D1E8	5
Trichloroethene	79-01-6	**146**	2.50	1.00	ug/L	05.21.18 15.16	D2	5
Trichlorofluoromethane	75-69-4	<2.00	10.0	2.00	ug/L	05.21.18 15.16	D1E8	5
Vinyl Acetate	108-05-4	<1.00	25.0	1.00	ug/L	05.21.18 15.16	D1E8	5
Vinyl Chloride	75-01-4	<0.500	2.50	0.500	ug/L	05.21.18 15.16	D1E8	5
trans-1,3-dichloropropene	10061-02-6	<0.300	2.50	0.300	ug/L	05.21.18 15.16	D1E8	5
1,1,2-Trichloro-1,2,2-Trifluoroethane	76-13-1	<1.50	25.0	1.50	ug/L	05.21.18 15.16	D1E8	5
1,3-Butadiene	106-99-0	<1.38	25.0	1.38	ug/L	05.21.18 15.16	D1E8	5
Cyclohexane	110-82-7	<0.575	25.0	0.575	ug/L	05.21.18 15.16	D1E8	5
Dicyclopentadiene	77-73-6	<0.270	25.0	0.270	ug/L	05.21.18 15.16	D1E8	5
Methylcyclohexane	108-87-2	<0.585	25.0	0.585	ug/L	05.21.18 15.16	D1E8	5
n-Hexane	110-54-3	<0.460	25.0	0.460	ug/L	05.21.18 15.16	D1E8	5
4-Ethyltoluene	622-96-8	Not Present			ug/L	05.21.18 15.16	T4E8	5

Final 1.000

Certificate of Analytical Results 585543

AMEC Foster Wheeler, Phoenix, AZ

Cave Creek Landfill - Maricopa

Sample Id: **DUP01-050718**
Lab Sample Id: 585543-017

Matrix: Water
Date Collected: 05.07.18 15.05

Date Received:05.10.18 14.10

Analytical Method: VOCs by SW 8260B
Tech: MNI
Analyst: MNI
Seq Number: 3051122

Date Prep: 05.21.18 10.31

Prep Method: SW5030C
% Solids:

Parameter	Cas Number	Result	RL	MDL	Units	Analysis Date	Flag	Dil
Propene	115-07-1	Not Present			ug/L	05.21.18 15.16	T4E8	5

Surrogate	% Recovery	Units	Limits	Analysis Date	Flag
4-Bromofluorobenzene	95	%	74-124	05.21.18 15.16	
Dibromofluoromethane	97	%	75-131	05.21.18 15.16	
1,2-Dichloroethane-D4	104	%	63-144	05.21.18 15.16	
Toluene-D8	99	%	80-117	05.21.18 15.16	

Certificate of Analytical Results 585543

AMEC Foster Wheeler, Phoenix, AZ

Cave Creek Landfill - Maricopa

Sample Id: **DUP02-050918** Matrix: Water Date Received:05.10.18 14.10
Lab Sample Id: 585543-018 Date Collected: 05.09.18 14.35

Analytical Method: VOCs by SW 8260B Prep Method: SW5030C
Tech: MNI % Solids:
Analyst: MNI Date Prep: 05.22.18 12.55
Seq Number: 3050960

Dilution Analysis:
Seq#: 3050960 Date Analyzed: 05/22/18 23:48 Date Prep: 05/22/18 12:55

Parameter	Cas Number	Result	RL	MDL	Units	Analysis Date	Flag	Dil
1,1,1,2-Tetrachloroethane	630-20-6	<0.100	0.500	0.100	ug/L	05.22.18 20.25	E8	1
1,1,1-Trichloroethane	71-55-6	<0.200	0.500	0.200	ug/L	05.22.18 20.25	E8	1
1,1,2,2-Tetrachloroethane	79-34-5	<0.100	0.500	0.100	ug/L	05.22.18 20.25	E8	1
1,1,2-Trichloroethane	79-00-5	<0.0900	0.500	0.0900	ug/L	05.22.18 20.25	E8	1
1,1-Dichloroethane	75-34-3	**0.830**	0.500	0.0700	ug/L	05.22.18 20.25		1
1,1-Dichloroethene	75-35-4	<0.200	0.500	0.200	ug/L	05.22.18 20.25	E8	1
1,1-Dichloropropene	563-58-6	<0.200	1.00	0.200	ug/L	05.22.18 20.25	E8	1
1,2,3-Trichlorobenzene	87-61-6	<0.200	5.00	0.200	ug/L	05.22.18 20.25	E8	1
1,2,3-Trichloropropane	96-18-4	<0.200	1.00	0.200	ug/L	05.22.18 20.25	E8	1
1,2,4-Trichlorobenzene	120-82-1	<0.0700	5.00	0.0700	ug/L	05.22.18 20.25	E8	1
1,2,4-Trimethylbenzene	95-63-6	<0.0700	2.00	0.0700	ug/L	05.22.18 20.25	E8	1
1,2-Dibromo-3-Chloropropane	96-12-8	<0.300	2.00	0.300	ug/L	05.22.18 20.25	L2E8	1
1,2-Dibromoethane	106-93-4	<0.200	0.500	0.200	ug/L	05.22.18 20.25	E8	1
1,2-Dichlorobenzene	95-50-1	<0.0800	1.50	0.0800	ug/L	05.22.18 20.25	E8	1
1,2-Dichloroethane	107-06-2	<0.100	0.500	0.100	ug/L	05.22.18 20.25	E8	1
1,2-Dichloropropane	78-87-5	<0.0900	0.500	0.0900	ug/L	05.22.18 20.25	E8	1
1,3,5-Trimethylbenzene	108-67-8	<0.0700	1.50	0.0700	ug/L	05.22.18 20.25	E8	1
1,3-Dichlorobenzene	541-73-1	<0.0600	1.50	0.0600	ug/L	05.22.18 20.25	E8	1
1,3-Dichloropropane	142-28-9	<0.0700	1.00	0.0700	ug/L	05.22.18 20.25	E8	1
1,4-Dichlorobenzene	106-46-7	<0.200	1.50	0.200	ug/L	05.22.18 20.25	E8	1
2,2-Dichloropropane	594-20-7	<0.200	0.500	0.200	ug/L	05.22.18 20.25	E8	1
2-Butanone	78-93-3	<0.300	5.00	0.300	ug/L	05.22.18 20.25	E8	1
2-Chlorotoluene	95-49-8	<0.0800	1.50	0.0800	ug/L	05.22.18 20.25	E8	1
2-Hexanone	591-78-6	<0.200	5.00	0.200	ug/L	05.22.18 20.25	E8	1
4-Chlorotoluene	106-43-4	<0.0700	2.00	0.0700	ug/L	05.22.18 20.25	E8	1
4-Methyl-2-Pentanone	108-10-1	<0.200	5.00	0.200	ug/L	05.22.18 20.25	E8	1
Acetone	67-64-1	**51.1**	20.0	0.600	ug/L	05.22.18 20.25		1
Benzene	71-43-2	<0.100	0.500	0.100	ug/L	05.22.18 20.25	E8	1
Bromobenzene	108-86-1	<0.0900	1.50	0.0900	ug/L	05.22.18 20.25	E8	1
Bromochloromethane	74-97-5	<0.200	0.500	0.200	ug/L	05.22.18 20.25	E8	1
Bromodichloromethane	75-27-4	<0.0800	0.500	0.0800	ug/L	05.22.18 20.25	E8	1
Bromoform	75-25-2	<0.100	1.00	0.100	ug/L	05.22.18 20.25	E8	1
Bromomethane	74-83-9	<0.300	5.00	0.300	ug/L	05.22.18 20.25	E8	1
Carbon Disulfide	75-15-0	<0.0900	0.500	0.0900	ug/L	05.22.18 20.25	E8	1
Carbon Tetrachloride	56-23-5	<0.200	0.500	0.200	ug/L	05.22.18 20.25	E8	1

Certificate of Analytical Results 585543

AMEC Foster Wheeler, Phoenix, AZ

Cave Creek Landfill - Maricopa

Sample Id: **DUP02-050918** Matrix: Water Date Received:05.10.18 14.10
Lab Sample Id: 585543-018 Date Collected: 05.09.18 14.35

Analytical Method: VOCs by SW 8260B Prep Method: SW5030C
Tech: MNI % Solids:
Analyst: MNI Date Prep: 05.22.18 12.55
Seq Number: 3050960

Dilution Analysis:
Seq#: 3050960 Date Analyzed: 05/22/18 23:48 Date Prep: 05/22/18 12:55

Parameter	Cas Number	Result	RL	MDL	Units	Analysis Date	Flag	Dil
Chlorobenzene	108-90-7	<0.0700	0.500	0.0700	ug/L	05.22.18 20.25	E8	1
Chloroethane	75-00-3	<0.600	4.00	0.600	ug/L	05.22.18 20.25	E8	1
Chloroform	67-66-3	<0.0700	0.500	0.0700	ug/L	05.22.18 20.25	E8	1
Chloromethane	74-87-3	<0.200	5.00	0.200	ug/L	05.22.18 20.25	E8	1
cis-1,2-Dichloroethene	156-59-2	**11.3**	0.500	0.200	ug/L	05.22.18 20.25		1
cis-1,3-Dichloropropene	10061-01-5	<0.0800	1.00	0.0800	ug/L	05.22.18 20.25	E8	1
Dibromochloromethane	124-48-1	<0.0700	0.500	0.0700	ug/L	05.22.18 20.25	E8	1
Dibromomethane	74-95-3	<0.200	0.500	0.200	ug/L	05.22.18 20.25	E8	1
Dichlorodifluoromethane	75-71-8	<0.200	2.00	0.200	ug/L	05.22.18 20.25	L1E8	1
Ethylbenzene	100-41-4	<0.0900	2.00	0.0900	ug/L	05.22.18 20.25	E8	1
Hexachlorobutadiene	87-68-3	<0.200	5.00	0.200	ug/L	05.22.18 20.25	E8	1
Iodomethane (Methyl Iodide)	74-88-4	<0.300	2.00	0.300	ug/L	05.22.18 20.25	E8	1
isopropylbenzene	98-82-8	<0.0800	2.50	0.0800	ug/L	05.22.18 20.25	E8	1
m,p-Xylenes	179601-23-1	<0.0900	2.00	0.0900	ug/L	05.22.18 20.25	E8	1
Methylene Chloride	75-09-2	<0.200	3.00	0.200	ug/L	05.22.18 20.25	E8	1
MTBE	1634-04-4	<0.100	2.00	0.100	ug/L	05.22.18 20.25	E8	1
Naphthalene	91-20-3	<0.200	5.00	0.200	ug/L	05.22.18 20.25	E8	1
n-Butylbenzene	104-51-8	<0.200	2.50	0.200	ug/L	05.22.18 20.25	E8	1
n-Propylbenzene	103-65-1	<0.0800	2.00	0.0800	ug/L	05.22.18 20.25	E8	1
o-Xylene	95-47-6	<0.0900	1.00	0.0900	ug/L	05.22.18 20.25	E8	1
p-Cymene (p-Isopropyltoluene)	99-87-6	<0.100	1.50	0.100	ug/L	05.22.18 20.25	E8	1
Sec-Butylbenzene	135-98-8	<0.100	1.50	0.100	ug/L	05.22.18 20.25	E8	1
Styrene	100-42-5	<0.0800	1.00	0.0800	ug/L	05.22.18 20.25	E8	1
tert-Butylbenzene	98-06-6	<0.200	2.50	0.200	ug/L	05.22.18 20.25	E8	1
Tetrachloroethylene	127-18-4	**5.54**	0.500	0.0800	ug/L	05.22.18 20.25		1
Toluene	108-88-3	<0.0700	2.00	0.0700	ug/L	05.22.18 20.25	E8	1
Total Trihalomethane		<0.0700	0.500	0.0700	ug/L	05.22.18 20.25	E8	1
Total Xylenes	1330-20-7	<0.0900	1.00	0.0900	ug/L	05.22.18 20.25	E8	1
trans-1,2-dichloroethene	156-60-5	<0.0900	0.500	0.0900	ug/L	05.22.18 20.25	E8	1
Trichloroethene	79-01-6	**401**	5.00	2.00	ug/L	05.22.18 23.48	D2	10
Trichlorofluoromethane	75-69-4	<0.400	2.00	0.400	ug/L	05.22.18 20.25	N1E8	1
Vinyl Acetate	108-05-4	<0.200	5.00	0.200	ug/L	05.22.18 20.25	E8	1
Vinyl Chloride	75-01-4	<0.100	0.500	0.100	ug/L	05.22.18 20.25	E8	1
trans-1,3-dichloropropene	10061-02-6	<0.0600	0.500	0.0600	ug/L	05.22.18 20.25	E8	1
1,1,2-Trichloro-1,2,2-Trifluoroethane	76-13-1	<0.300	5.00	0.300	ug/L	05.22.18 20.25	E8	1

Certificate of Analytical Results 585543

AMEC Foster Wheeler, Phoenix, AZ

Cave Creek Landfill - Maricopa

Sample Id: **DUP02-050918** Matrix: Water Date Received:05.10.18 14.10
Lab Sample Id: 585543-018 Date Collected: 05.09.18 14.35

Analytical Method: VOCs by SW 8260B Prep Method: SW5030C
Tech: MNI % Solids:
Analyst: MNI Date Prep: 05.22.18 12.55
Seq Number: 3050960

Dilution Analysis:
Seq#: 3050960 Date Analyzed: 05/22/18 23:48 Date Prep: 05/22/18 12:55

Parameter	Cas Number	Result	RL	MDL	Units	Analysis Date	Flag	Dil
1,3-Butadiene	106-99-0	<0.276	5.00	0.276	ug/L	05.22.18 20.25	E8	1
Cyclohexane	110-82-7	<0.115	5.00	0.115	ug/L	05.22.18 20.25	E8	1
Dicyclopentadiene	77-73-6	<0.0540	5.00	0.0540	ug/L	05.22.18 20.25	E8	1
Methylcyclohexane	108-87-2	<0.117	5.00	0.117	ug/L	05.22.18 20.25	E8	1
n-Hexane	110-54-3	<0.0920	5.00	0.0920	ug/L	05.22.18 20.25	E8	1
4-Ethyltoluene	622-96-8	Not Present			ug/L	05.22.18 20.25	T4E8	1
Propene	115-07-1	Not Present			ug/L	05.22.18 20.25	T4E8	1

Surrogate	% Recovery	Units	Limits	Analysis Date	Flag
4-Bromofluorobenzene	101	%	74-124	05.22.18 20.25	
Dibromofluoromethane	102	%	75-131	05.22.18 20.25	
1,2-Dichloroethane-D4	103	%	63-144	05.22.18 20.25	
Toluene-D8	101	%	80-117	05.22.18 20.25	

Certificate of Analytical Results 585543

AMEC Foster Wheeler, Phoenix, AZ

Cave Creek Landfill - Maricopa

Sample Id: **PDB Blank-051018**
Lab Sample Id: 585543-019

Matrix: Water
Date Collected: 05.10.18 09.38

Date Received:05.10.18 14.10

Analytical Method: VOCs by SW 8260B
Tech: MNI
Analyst: MNI
Seq Number: 3050960

Date Prep: 05.22.18 12.55

Prep Method: SW5030C
% Solids:

Parameter	Cas Number	Result	RL	MDL	Units	Analysis Date	Flag	Dil
1,1,1,2-Tetrachloroethane	630-20-6	<0.100	0.500	0.100	ug/L	05.22.18 20.50	E8	1
1,1,1-Trichloroethane	71-55-6	<0.200	0.500	0.200	ug/L	05.22.18 20.50	E8	1
1,1,2,2-Tetrachloroethane	79-34-5	<0.100	0.500	0.100	ug/L	05.22.18 20.50	E8	1
1,1,2-Trichloroethane	79-00-5	<0.0900	0.500	0.0900	ug/L	05.22.18 20.50	E8	1
1,1-Dichloroethane	75-34-3	<0.0700	0.500	0.0700	ug/L	05.22.18 20.50	E8	1
1,1-Dichloroethene	75-35-4	<0.200	0.500	0.200	ug/L	05.22.18 20.50	E8	1
1,1-Dichloropropene	563-58-6	<0.200	1.00	0.200	ug/L	05.22.18 20.50	E8	1
1,2,3-Trichlorobenzene	87-61-6	<0.200	5.00	0.200	ug/L	05.22.18 20.50	E8	1
1,2,3-Trichloropropane	96-18-4	<0.200	1.00	0.200	ug/L	05.22.18 20.50	E8	1
1,2,4-Trichlorobenzene	120-82-1	<0.0700	5.00	0.0700	ug/L	05.22.18 20.50	E8	1
1,2,4-Trimethylbenzene	95-63-6	<0.0700	2.00	0.0700	ug/L	05.22.18 20.50	E8	1
1,2-Dibromo-3-Chloropropane	96-12-8	<0.300	2.00	0.300	ug/L	05.22.18 20.50	L2E8	1
1,2-Dibromoethane	106-93-4	<0.200	0.500	0.200	ug/L	05.22.18 20.50	E8	1
1,2-Dichlorobenzene	95-50-1	<0.0800	1.50	0.0800	ug/L	05.22.18 20.50	E8	1
1,2-Dichloroethane	107-06-2	<0.100	0.500	0.100	ug/L	05.22.18 20.50	E8	1
1,2-Dichloropropane	78-87-5	<0.0900	0.500	0.0900	ug/L	05.22.18 20.50	E8	1
1,3,5-Trimethylbenzene	108-67-8	<0.0700	1.50	0.0700	ug/L	05.22.18 20.50	E8	1
1,3-Dichlorobenzene	541-73-1	<0.0600	1.50	0.0600	ug/L	05.22.18 20.50	E8	1
1,3-Dichloropropane	142-28-9	<0.0700	1.00	0.0700	ug/L	05.22.18 20.50	E8	1
1,4-Dichlorobenzene	106-46-7	<0.200	1.50	0.200	ug/L	05.22.18 20.50	E8	1
2,2-Dichloropropane	594-20-7	<0.200	0.500	0.200	ug/L	05.22.18 20.50	E8	1
2-Butanone	78-93-3	<0.300	5.00	0.300	ug/L	05.22.18 20.50	E8	1
2-Chlorotoluene	95-49-8	<0.0800	1.50	0.0800	ug/L	05.22.18 20.50	E8	1
2-Hexanone	591-78-6	<0.200	5.00	0.200	ug/L	05.22.18 20.50	E8	1
4-Chlorotoluene	106-43-4	<0.0700	2.00	0.0700	ug/L	05.22.18 20.50	E8	1
4-Methyl-2-Pentanone	108-10-1	<0.200	5.00	0.200	ug/L	05.22.18 20.50	E8	1
Acetone	67-64-1	**26.6**	20.0	0.600	ug/L	05.22.18 20.50		1
Benzene	71-43-2	<0.100	0.500	0.100	ug/L	05.22.18 20.50	E8	1
Bromobenzene	108-86-1	<0.0900	1.50	0.0900	ug/L	05.22.18 20.50	E8	1
Bromochloromethane	74-97-5	<0.200	0.500	0.200	ug/L	05.22.18 20.50	E8	1
Bromodichloromethane	75-27-4	<0.0800	0.500	0.0800	ug/L	05.22.18 20.50	E8	1
Bromoform	75-25-2	<0.100	1.00	0.100	ug/L	05.22.18 20.50	E8	1
Bromomethane	74-83-9	<0.300	5.00	0.300	ug/L	05.22.18 20.50	E8	1
Carbon Disulfide	75-15-0	<0.0900	0.500	0.0900	ug/L	05.22.18 20.50	E8	1
Carbon Tetrachloride	56-23-5	<0.200	0.500	0.200	ug/L	05.22.18 20.50	E8	1
Chlorobenzene	108-90-7	<0.0700	0.500	0.0700	ug/L	05.22.18 20.50	E8	1
Chloroethane	75-00-3	<0.600	4.00	0.600	ug/L	05.22.18 20.50	E8	1
Chloroform	67-66-3	<0.0700	0.500	0.0700	ug/L	05.22.18 20.50	E8	1

Certificate of Analytical Results 585543

AMEC Foster Wheeler, Phoenix, AZ

Cave Creek Landfill - Maricopa

Sample Id: **PDB Blank-051018**
Lab Sample Id: 585543-019

Matrix: Water
Date Collected: 05.10.18 09.38

Date Received:05.10.18 14.10

Analytical Method: VOCs by SW 8260B
Tech: MNI
Analyst: MNI
Seq Number: 3050960

Date Prep: 05.22.18 12.55

Prep Method: SW5030C
% Solids:

Parameter	Cas Number	Result	RL	MDL	Units	Analysis Date	Flag	Dil
Chloromethane	74-87-3	<0.200	5.00	0.200	ug/L	05.22.18 20.50	E8	1
cis-1,2-Dichloroethene	156-59-2	<0.200	0.500	0.200	ug/L	05.22.18 20.50	E8	1
cis-1,3-Dichloropropene	10061-01-5	<0.0800	1.00	0.0800	ug/L	05.22.18 20.50	E8	1
Dibromochloromethane	124-48-1	<0.0700	0.500	0.0700	ug/L	05.22.18 20.50	E8	1
Dibromomethane	74-95-3	<0.200	0.500	0.200	ug/L	05.22.18 20.50	E8	1
Dichlorodifluoromethane	75-71-8	<0.200	2.00	0.200	ug/L	05.22.18 20.50	L1E8	1
Ethylbenzene	100-41-4	<0.0900	2.00	0.0900	ug/L	05.22.18 20.50	E8	1
Hexachlorobutadiene	87-68-3	<0.200	5.00	0.200	ug/L	05.22.18 20.50	E8	1
Iodomethane (Methyl Iodide)	74-88-4	<0.300	2.00	0.300	ug/L	05.22.18 20.50	E8	1
isopropylbenzene	98-82-8	<0.0800	2.50	0.0800	ug/L	05.22.18 20.50	E8	1
m,p-Xylenes	179601-23-1	<0.0900	2.00	0.0900	ug/L	05.22.18 20.50	E8	1
Methylene Chloride	75-09-2	<0.200	3.00	0.200	ug/L	05.22.18 20.50	E8	1
MTBE	1634-04-4	<0.100	2.00	0.100	ug/L	05.22.18 20.50	E8	1
Naphthalene	91-20-3	<0.200	5.00	0.200	ug/L	05.22.18 20.50	E8	1
n-Butylbenzene	104-51-8	<0.200	2.50	0.200	ug/L	05.22.18 20.50	E8	1
n-Propylbenzene	103-65-1	<0.0800	2.00	0.0800	ug/L	05.22.18 20.50	E8	1
o-Xylene	95-47-6	<0.0900	1.00	0.0900	ug/L	05.22.18 20.50	E8	1
p-Cymene (p-Isopropyltoluene)	99-87-6	<0.100	1.50	0.100	ug/L	05.22.18 20.50	E8	1
Sec-Butylbenzene	135-98-8	<0.100	1.50	0.100	ug/L	05.22.18 20.50	E8	1
Styrene	100-42-5	<0.0800	1.00	0.0800	ug/L	05.22.18 20.50	E8	1
tert-Butylbenzene	98-06-6	<0.200	2.50	0.200	ug/L	05.22.18 20.50	E8	1
Tetrachloroethylene	127-18-4	<0.0800	0.500	0.0800	ug/L	05.22.18 20.50	E8	1
Toluene	108-88-3	<0.0700	2.00	0.0700	ug/L	05.22.18 20.50	E8	1
Total Trihalomethane		<0.0700	0.500	0.0700	ug/L	05.22.18 20.50	E8	1
Total Xylenes	1330-20-7	<0.0900	1.00	0.0900	ug/L	05.22.18 20.50	E8	1
trans-1,2-dichloroethene	156-60-5	<0.0900	0.500	0.0900	ug/L	05.22.18 20.50	E8	1
Trichloroethene	79-01-6	<0.200	0.500	0.200	ug/L	05.22.18 20.50	E8	1
Trichlorofluoromethane	75-69-4	<0.400	2.00	0.400	ug/L	05.22.18 20.50	N1E8	1
Vinyl Acetate	108-05-4	<0.200	5.00	0.200	ug/L	05.22.18 20.50	E8	1
Vinyl Chloride	75-01-4	<0.100	0.500	0.100	ug/L	05.22.18 20.50	E8	1
trans-1,3-dichloropropene	10061-02-6	<0.0600	0.500	0.0600	ug/L	05.22.18 20.50	E8	1
1,1,2-Trichloro-1,2,2-Trifluoroethane	76-13-1	<0.300	5.00	0.300	ug/L	05.22.18 20.50	E8	1
1,3-Butadiene	106-99-0	<0.276	5.00	0.276	ug/L	05.22.18 20.50	E8	1
Cyclohexane	110-82-7	<0.115	5.00	0.115	ug/L	05.22.18 20.50	E8	1
Dicyclopentadiene	77-73-6	<0.0540	5.00	0.0540	ug/L	05.22.18 20.50	E8	1
Methylcyclohexane	108-87-2	<0.117	5.00	0.117	ug/L	05.22.18 20.50	E8	1
n-Hexane	110-54-3	<0.0920	5.00	0.0920	ug/L	05.22.18 20.50	E8	1
4-Ethyltoluene	622-96-8	Not Present			ug/L	05.22.18 20.50	T4E8	1

Certificate of Analytical Results 585543

AMEC Foster Wheeler, Phoenix, AZ

Cave Creek Landfill - Maricopa

Sample Id: **PDB Blank-051018**
Lab Sample Id: 585543-019

Matrix: Water
Date Collected: 05.10.18 09.38

Date Received:05.10.18 14.10

Analytical Method: VOCs by SW 8260B
Tech: MNI
Analyst: MNI
Seq Number: 3050960

Date Prep: 05.22.18 12.55

Prep Method: SW5030C
% Solids:

Parameter	Cas Number	Result	RL	MDL	Units	Analysis Date	Flag	Dil
Propene	115-07-1	Not Present			ug/L	05.22.18 20.50	T4E8	1

Surrogate	% Recovery	Units	Limits	Analysis Date	Flag
4-Bromofluorobenzene	91	%	74-124	05.22.18 20.50	
Dibromofluoromethane	89	%	75-131	05.22.18 20.50	
1,2-Dichloroethane-D4	93	%	63-144	05.22.18 20.50	
Toluene-D8	90	%	80-117	05.22.18 20.50	

Certificate of Analytical Results 585543

AMEC Foster Wheeler, Phoenix, AZ

Cave Creek Landfill - Maricopa

Sample Id: **Trip Blank-051018** Matrix: Water Date Received:05.10.18 14.10
Lab Sample Id: 585543-020 Date Collected: 05.10.18 09.50

Analytical Method: VOCs by SW 8260B Prep Method: SW5030C
Tech: MNI % Solids:
Analyst: MNI Date Prep: 05.22.18 12.55
Seq Number: 3050960

Dilution Analysis:
Seq#: 3051314 Date Analyzed: 05/24/18 19:20 Date Prep: 05/24/18 14:54

Parameter	Cas Number	Result	RL	MDL	Units	Analysis Date	Flag	Dil
1,1,1,2-Tetrachloroethane	630-20-6	<0.100	0.500	0.100	ug/L	05.22.18 21.16	E8	1
1,1,1-Trichloroethane	71-55-6	<0.200	0.500	0.200	ug/L	05.22.18 21.16	E8	1
1,1,2,2-Tetrachloroethane	79-34-5	<0.100	0.500	0.100	ug/L	05.22.18 21.16	E8	1
1,1,2-Trichloroethane	79-00-5	<0.0900	0.500	0.0900	ug/L	05.22.18 21.16	E8	1
1,1-Dichloroethane	75-34-3	<0.0700	0.500	0.0700	ug/L	05.22.18 21.16	E8	1
1,1-Dichloroethene	75-35-4	<0.200	0.500	0.200	ug/L	05.22.18 21.16	E8	1
1,1-Dichloropropene	563-58-6	<0.200	1.00	0.200	ug/L	05.22.18 21.16	E8	1
1,2,3-Trichlorobenzene	87-61-6	<0.200	5.00	0.200	ug/L	05.22.18 21.16	E8	1
1,2,3-Trichloropropane	96-18-4	<0.200	1.00	0.200	ug/L	05.22.18 21.16	E8	1
1,2,4-Trichlorobenzene	120-82-1	<0.0700	5.00	0.0700	ug/L	05.22.18 21.16	E8	1
1,2,4-Trimethylbenzene	95-63-6	<0.0700	2.00	0.0700	ug/L	05.22.18 21.16	E8	1
1,2-Dibromo-3-Chloropropane	96-12-8	<0.300	2.00	0.300	ug/L	05.22.18 21.16	L2E8	1
1,2-Dibromoethane	106-93-4	<0.200	0.500	0.200	ug/L	05.22.18 21.16	E8	1
1,2-Dichlorobenzene	95-50-1	<0.0800	1.50	0.0800	ug/L	05.22.18 21.16	E8	1
1,2-Dichloroethane	107-06-2	<0.100	0.500	0.100	ug/L	05.22.18 21.16	E8	1
1,2-Dichloropropane	78-87-5	<0.0900	0.500	0.0900	ug/L	05.22.18 21.16	E8	1
1,3,5-Trimethylbenzene	108-67-8	<0.0700	1.50	0.0700	ug/L	05.22.18 21.16	E8	1
1,3-Dichlorobenzene	541-73-1	<0.0600	1.50	0.0600	ug/L	05.22.18 21.16	E8	1
1,3-Dichloropropane	142-28-9	<0.0700	1.00	0.0700	ug/L	05.22.18 21.16	E8	1
1,4-Dichlorobenzene	106-46-7	<0.200	1.50	0.200	ug/L	05.22.18 21.16	E8	1
2,2-Dichloropropane	594-20-7	<0.200	0.500	0.200	ug/L	05.22.18 21.16	E8	1
2-Butanone	78-93-3	<0.300	5.00	0.300	ug/L	05.22.18 21.16	E8	1
2-Chlorotoluene	95-49-8	<0.0800	1.50	0.0800	ug/L	05.22.18 21.16	E8	1
2-Hexanone	591-78-6	<0.200	5.00	0.200	ug/L	05.22.18 21.16	E8	1
4-Chlorotoluene	106-43-4	<0.0700	2.00	0.0700	ug/L	05.22.18 21.16	E8	1
4-Methyl-2-Pentanone	108-10-1	<0.200	5.00	0.200	ug/L	05.22.18 21.16	E8	1
Acetone	67-64-1	**609**	200	6.00	ug/L	05.24.18 19.20	D2	10
Benzene	71-43-2	<0.100	0.500	0.100	ug/L	05.22.18 21.16	E8	1
Bromobenzene	108-86-1	<0.0900	1.50	0.0900	ug/L	05.22.18 21.16	E8	1
Bromochloromethane	74-97-5	<0.200	0.500	0.200	ug/L	05.22.18 21.16	E8	1
Bromodichloromethane	75-27-4	<0.0800	0.500	0.0800	ug/L	05.22.18 21.16	E8	1
Bromoform	75-25-2	<0.100	1.00	0.100	ug/L	05.22.18 21.16	E8	1
Bromomethane	74-83-9	<0.300	5.00	0.300	ug/L	05.22.18 21.16	E8	1
Carbon Disulfide	75-15-0	<0.0900	0.500	0.0900	ug/L	05.22.18 21.16	E8	1
Carbon Tetrachloride	56-23-5	<0.200	0.500	0.200	ug/L	05.22.18 21.16	E8	1

Certificate of Analytical Results 585543

AMEC Foster Wheeler, Phoenix, AZ

Cave Creek Landfill - Maricopa

Sample Id: **Trip Blank-051018** Matrix: Water Date Received:05.10.18 14.10
Lab Sample Id: 585543-020 Date Collected: 05.10.18 09.50

Analytical Method: VOCs by SW 8260B Prep Method: SW5030C
Tech: MNI % Solids:
Analyst: MNI Date Prep: 05.22.18 12.55
Seq Number: 3050960

Dilution Analysis:
Seq#: 3051314 Date Analyzed: 05/24/18 19:20 Date Prep: 05/24/18 14:54

Parameter	Cas Number	Result	RL	MDL	Units	Analysis Date	Flag	Dil
Chlorobenzene	108-90-7	<0.0700	0.500	0.0700	ug/L	05.22.18 21.16	E8	1
Chloroethane	75-00-3	<0.600	4.00	0.600	ug/L	05.22.18 21.16	E8	1
Chloroform	67-66-3	<0.0700	0.500	0.0700	ug/L	05.22.18 21.16	E8	1
Chloromethane	74-87-3	**7.01**	5.00	0.200	ug/L	05.22.18 21.16		1
cis-1,2-Dichloroethene	156-59-2	<0.200	0.500	0.200	ug/L	05.22.18 21.16	E8	1
cis-1,3-Dichloropropene	10061-01-5	<0.0800	1.00	0.0800	ug/L	05.22.18 21.16	E8	1
Dibromochloromethane	124-48-1	<0.0700	0.500	0.0700	ug/L	05.22.18 21.16	E8	1
Dibromomethane	74-95-3	<0.200	0.500	0.200	ug/L	05.22.18 21.16	E8	1
Dichlorodifluoromethane	75-71-8	<0.200	2.00	0.200	ug/L	05.22.18 21.16	L1E8	1
Ethylbenzene	100-41-4	<0.0900	2.00	0.0900	ug/L	05.22.18 21.16	E8	1
Hexachlorobutadiene	87-68-3	<0.200	5.00	0.200	ug/L	05.22.18 21.16	E8	1
Iodomethane (Methyl Iodide)	74-88-4	<0.300	2.00	0.300	ug/L	05.22.18 21.16	E8	1
isopropylbenzene	98-82-8	<0.0800	2.50	0.0800	ug/L	05.22.18 21.16	E8	1
m,p-Xylenes	179601-23-1	<0.0900	2.00	0.0900	ug/L	05.22.18 21.16	E8	1
Methylene Chloride	75-09-2	<0.200	3.00	0.200	ug/L	05.22.18 21.16	E8	1
MTBE	1634-04-4	<0.100	2.00	0.100	ug/L	05.22.18 21.16	E8	1
Naphthalene	91-20-3	<0.200	5.00	0.200	ug/L	05.22.18 21.16	E8	1
n-Butylbenzene	104-51-8	<0.200	2.50	0.200	ug/L	05.22.18 21.16	E8	1
n-Propylbenzene	103-65-1	<0.0800	2.00	0.0800	ug/L	05.22.18 21.16	E8	1
o-Xylene	95-47-6	<0.0900	1.00	0.0900	ug/L	05.22.18 21.16	E8	1
p-Cymene (p-Isopropyltoluene)	99-87-6	<0.100	1.50	0.100	ug/L	05.22.18 21.16	E8	1
Sec-Butylbenzene	135-98-8	<0.100	1.50	0.100	ug/L	05.22.18 21.16	E8	1
Styrene	100-42-5	<0.0800	1.00	0.0800	ug/L	05.22.18 21.16	E8	1
tert-Butylbenzene	98-06-6	<0.200	2.50	0.200	ug/L	05.22.18 21.16	E8	1
Tetrachloroethylene	127-18-4	<0.0800	0.500	0.0800	ug/L	05.22.18 21.16	E8	1
Toluene	108-88-3	<0.0700	2.00	0.0700	ug/L	05.22.18 21.16	E8	1
Total Trihalomethane		<0.0700	0.500	0.0700	ug/L	05.22.18 21.16	E8	1
Total Xylenes	1330-20-7	<0.0900	1.00	0.0900	ug/L	05.22.18 21.16	E8	1
trans-1,2-dichloroethene	156-60-5	<0.0900	0.500	0.0900	ug/L	05.22.18 21.16	E8	1
Trichloroethene	79-01-6	<0.200	0.500	0.200	ug/L	05.22.18 21.16	E8	1
Trichlorofluoromethane	75-69-4	<0.400	2.00	0.400	ug/L	05.22.18 21.16	N1E8	1
Vinyl Acetate	108-05-4	<0.200	5.00	0.200	ug/L	05.22.18 21.16	E8	1
Vinyl Chloride	75-01-4	<0.100	0.500	0.100	ug/L	05.22.18 21.16	E8	1
trans-1,3-dichloropropene	10061-02-6	<0.0600	0.500	0.0600	ug/L	05.22.18 21.16	E8	1
1,1,2-Trichloro-1,2,2-Trifluoroethane	76-13-1	<0.300	5.00	0.300	ug/L	05.22.18 21.16	E8	1

Certificate of Analytical Results 585543

AMEC Foster Wheeler, Phoenix, AZ

Cave Creek Landfill - Maricopa

Sample Id: **Trip Blank-051018**
Matrix: Water
Date Received:05.10.18 14.10
Lab Sample Id: 585543-020
Date Collected: 05.10.18 09.50

Analytical Method: VOCs by SW 8260B
Prep Method: SW5030C
Tech: MNI
% Solids:
Analyst: MNI
Date Prep: 05.22.18 12.55
Seq Number: 3050960

Dilution Analysis:
Seq#: 3051314 Date Analyzed: 05/24/18 19:20 Date Prep: 05/24/18 14:54

Parameter	Cas Number	Result	RL	MDL	Units	Analysis Date	Flag	Dil
1,3-Butadiene	106-99-0	<0.276	5.00	0.276	ug/L	05.22.18 21.16	E8	1
Cyclohexane	110-82-7	<0.115	5.00	0.115	ug/L	05.22.18 21.16	E8	1
Dicyclopentadiene	77-73-6	<0.0540	5.00	0.0540	ug/L	05.22.18 21.16	E8	1
Methylcyclohexane	108-87-2	<0.117	5.00	0.117	ug/L	05.22.18 21.16	E8	1
n-Hexane	110-54-3	<0.0920	5.00	0.0920	ug/L	05.22.18 21.16	E8	1
4-Ethyltoluene	622-96-8	Not Present			ug/L	05.22.18 21.16	T4E8	1
Propene	115-07-1	Not Present			ug/L	05.22.18 21.16	T4E8	1

Surrogate	% Recovery	Units	Limits	Analysis Date	Flag
4-Bromofluorobenzene	93	%	74-124	05.22.18 21.16	
Dibromofluoromethane	93	%	75-131	05.22.18 21.16	
1,2-Dichloroethane-D4	97	%	63-144	05.22.18 21.16	
Toluene-D8	94	%	80-117	05.22.18 21.16	

QC Summary 585543

AMEC Foster Wheeler

Cave Creek Landfill - Maricopa

Analytical Method: VOCs by SW 8260B Prep Method: SW5030C

Seq Number: 3051122 Matrix: Water Date Prep: 05.21.18

MB Sample Id: 7645215-1-BLK LCS Sample Id: 7645215-1-BKS LCSD Sample Id: 7645215-1-BSD

Parameter	MB Result	Spike Amount	LCS Result	LCS %Rec	LCSD Result	LCSD %Rec	Limits	%RPD	RPD Limit	Units	Analysis Date	Flag
1,1,1,2-Tetrachloroethane	<0.100	20.0	19.2	96	18.6	93	70-130	3	20	ug/L	05.21.18 10:53	
1,1,1-Trichloroethane	<0.200	20.0	18.4	92	17.7	89	70-130	4	20	ug/L	05.21.18 10:53	
1,1,2,2-Tetrachloroethane	<0.100	20.0	18.4	92	18.0	90	70-130	2	20	ug/L	05.21.18 10:53	
1,1,2-Trichloroethane	<0.0900	20.0	18.1	91	18.1	91	70-130	0	20	ug/L	05.21.18 10:53	
1,1-Dichloroethane	<0.0700	20.0	17.3	87	17.1	86	70-130	1	20	ug/L	05.21.18 10:53	
1,1-Dichloroethene	<0.200	20.0	16.8	84	17.3	87	70-130	3	21	ug/L	05.21.18 10:53	
1,1-Dichloropropene	<0.200	20.0	18.3	92	17.8	89	70-130	3	20	ug/L	05.21.18 10:53	
1,2,3-Trichlorobenzene	<0.200	20.0	20.1	101	19.6	98	70-130	3	27	ug/L	05.21.18 10:53	
1,2,3-Trichloropropane	<0.200	20.0	21.5	108	21.0	105	70-130	2	20	ug/L	05.21.18 10:53	
1,2,4-Trichlorobenzene	<0.0700	20.0	20.2	101	20.0	100	70-130	1	20	ug/L	05.21.18 10:53	
1,2,4-Trimethylbenzene	<0.0700	20.0	19.0	95	18.1	91	70-130	5	20	ug/L	05.21.18 10:53	
1,2-Dibromo-3-Chloropropane	<0.300	20.0	19.5	98	19.3	97	70-130	1	21	ug/L	05.21.18 10:53	
1,2-Dibromoethane	<0.200	20.0	18.7	94	18.4	92	70-130	2	20	ug/L	05.21.18 10:53	
1,2-Dichlorobenzene	<0.0800	20.0	21.0	105	20.4	102	70-130	3	20	ug/L	05.21.18 10:53	
1,2-Dichloroethane	<0.100	20.0	19.5	98	19.2	96	70-130	2	20	ug/L	05.21.18 10:53	
1,2-Dichloropropane	<0.0900	20.0	18.5	93	18.1	91	70-130	2	20	ug/L	05.21.18 10:53	
1,3,5-Trimethylbenzene	<0.0700	20.0	19.0	95	17.9	90	70-130	6	20	ug/L	05.21.18 10:53	
1,3-Dichlorobenzene	<0.0600	20.0	19.7	99	18.8	94	70-130	5	20	ug/L	05.21.18 10:53	
1,3-Dichloropropane	<0.0700	20.0	18.2	91	17.8	89	70-130	2	20	ug/L	05.21.18 10:53	
1,4-Dichlorobenzene	<0.200	20.0	19.6	98	18.7	94	70-130	5	20	ug/L	05.21.18 10:53	
2,2-Dichloropropane	<0.200	20.0	13.9	70	13.5	68	70-130	3	24	ug/L	05.21.18 10:53	L2
2-Butanone	<0.300	40.0	35.5	89	36.4	91	51-116	3	27	ug/L	05.21.18 10:53	
2-Chlorotoluene	<0.0800	20.0	19.1	96	17.7	89	70-130	8	20	ug/L	05.21.18 10:53	
2-Hexanone	<0.200	40.0	35.5	89	36.3	91	59-101	2	20	ug/L	05.21.18 10:53	
4-Chlorotoluene	<0.0700	20.0	18.4	92	17.4	87	70-130	6	28	ug/L	05.21.18 10:53	
4-Methyl-2-Pentanone	<0.200	40.0	36.4	91	37.0	93	57-106	2	21	ug/L	05.21.18 10:53	
Acetone	<0.600	40.0	36.5	91	38.9	97	47-128	6	28	ug/L	05.21.18 10:53	
Benzene	<0.100	20.0	18.0	90	18.1	91	70-130	1	20	ug/L	05.21.18 10:53	
Bromobenzene	<0.0900	20.0	19.9	100	19.2	96	70-130	4	20	ug/L	05.21.18 10:53	
Bromochloromethane	<0.200	20.0	20.5	103	19.0	95	70-130	8	24	ug/L	05.21.18 10:53	
Bromodichloromethane	<0.0800	20.0	18.8	94	18.1	91	70-130	4	20	ug/L	05.21.18 10:53	
Bromoform	<0.100	20.0	19.1	96	19.4	97	66-132	2	20	ug/L	05.21.18 10:53	
Bromomethane	<0.300	20.0	17.3	87	17.1	86	63-130	1	25	ug/L	05.21.18 10:53	
Carbon Disulfide	<0.0900	20.0	18.8	94	18.1	91	70-130	4	22	ug/L	05.21.18 10:53	
Carbon Tetrachloride	<0.200	20.0	18.1	91	17.1	86	70-130	6	21	ug/L	05.21.18 10:53	
Chlorobenzene	<0.0700	20.0	20.7	104	20.3	102	70-130	2	20	ug/L	05.21.18 10:53	
Chloroethane	<0.600	20.0	19.4	97	20.8	104	70-140	7	24	ug/L	05.21.18 10:53	
Chloroform	<0.0700	20.0	18.0	90	17.6	88	70-130	2	24	ug/L	05.21.18 10:53	
Chloromethane	<0.200	20.0	17.5	88	18.7	94	25-130	7	26	ug/L	05.21.18 10:53	
cis-1,2-Dichloroethene	<0.200	20.0	17.9	90	17.4	87	70-130	3	24	ug/L	05.21.18 10:53	
cis-1,3-Dichloropropene	<0.0800	20.0	16.7	84	15.9	80	70-130	5	20	ug/L	05.21.18 10:53	
Dibromochloromethane	<0.0700	20.0	19.0	95	18.6	93	70-130	2	20	ug/L	05.21.18 10:53	
Dibromomethane	<0.200	20.0	18.6	93	18.3	92	70-130	2	23	ug/L	05.21.18 10:53	
Dichlorodifluoromethane	<0.200	20.0	19.3	97	18.8	94	25-136	3	27	ug/L	05.21.18 10:53	
Ethylbenzene	<0.0900	20.0	18.2	91	18.2	91	70-130	0	20	ug/L	05.21.18 10:53	
Hexachlorobutadiene	<0.200	20.0	19.4	97	18.9	95	63-139	3	22	ug/L	05.21.18 10:53	
Iodomethane (Methyl Iodide)	<0.300	20.0	17.5	88	16.8	84	70-130	4	22	ug/L	05.21.18 10:53	
isopropylbenzene	<0.0800	20.0	19.0	95	18.2	91	70-130	4	20	ug/L	05.21.18 10:53	
m,p-Xylenes	<0.0900	40.0	39.1	98	37.9	95	70-130	3	20	ug/L	05.21.18 10:53	

MS/MSD Percent Recovery [D] = 100*(C-A) / B
Relative Percent Difference RPD = 200* | (C-E) / (C+E) |
LCS/LCSD Recovery [D] = 100 * (C) / [B]
Log Difference Log Diff. = Log(Sample Duplicate) - Log(Original Sample)

LCS = Laboratory Control Sample
A = Parent Result
C = MS/LCS Result
E = MSD/LCSD Result

MS = Matrix Spike
B = Spike Added
D = MSD/LCSD % Rec

QC Summary 585543

AMEC Foster Wheeler

Cave Creek Landfill - Maricopa

Analytical Method: **VOCs by SW 8260B** Prep Method: SW5030C

Seq Number: 3051122 Matrix: Water Date Prep: 05.21.18

MB Sample Id: 7645215-1-BLK LCS Sample Id: 7645215-1-BKS LCSD Sample Id: 7645215-1-BSD

Parameter	MB Result	Spike Amount	LCS Result	LCS %Rec	LCSD Result	LCSD %Rec	Limits	%RPD	RPD Limit	Units	Analysis Date	Flag
Methylene Chloride	<0.200	20.0	16.6	83	16.3	82	70-130	2	20	ug/L	05.21.18 10:53	
MTBE	<0.100	20.0	18.3	92	18.2	91	70-130	1	21	ug/L	05.21.18 10:53	
Naphthalene	<0.200	20.0	19.1	96	19.0	95	70-130	1	27	ug/L	05.21.18 10:53	
n-Butylbenzene	<0.200	20.0	18.1	91	17.5	88	70-130	3	20	ug/L	05.21.18 10:53	
n-Propylbenzene	<0.0800	20.0	18.2	91	17.6	88	70-130	3	20	ug/L	05.21.18 10:53	
o-Xylene	<0.0900	20.0	19.5	98	19.7	99	70-130	1	20	ug/L	05.21.18 10:53	
p-Cymene (p-Isopropyltoluene)	<0.100	20.0	19.4	97	18.5	93	70-130	5	20	ug/L	05.21.18 10:53	
Sec-Butylbenzene	<0.100	20.0	18.9	95	18.1	91	70-130	4	20	ug/L	05.21.18 10:53	
Styrene	<0.0800	20.0	19.4	97	19.0	95	70-130	2	20	ug/L	05.21.18 10:53	
tert-Butylbenzene	<0.200	20.0	22.0	110	20.9	105	70-130	5	20	ug/L	05.21.18 10:53	
Tetrachloroethylene	<0.0800	20.0	20.7	104	20.2	101	70-130	2	20	ug/L	05.21.18 10:53	
Toluene	<0.0700	20.0	19.8	99	19.1	96	70-130	4	20	ug/L	05.21.18 10:53	
trans-1,2-dichloroethene	<0.0900	20.0	16.7	84	17.3	87	70-130	4	21	ug/L	05.21.18 10:53	
Trichloroethene	<0.200	20.0	18.5	93	17.6	88	70-130	5	20	ug/L	05.21.18 10:53	
Trichlorofluoromethane	<0.400	20.0	20.8	104	17.7	89	70-130	16	22	ug/L	05.21.18 10:53	
Vinyl Acetate	<0.200	20.0	15.4	77	14.9	75	46-172	3	22	ug/L	05.21.18 10:53	
Vinyl Chloride	<0.100	20.0	18.9	95	18.1	91	41-132	4	25	ug/L	05.21.18 10:53	
trans-1,3-dichloropropene	<0.0600	20.0	15.8	79	15.8	79	70-130	0	20	ug/L	05.21.18 10:53	
1,1,2-Trichloro-1,2,2-Trifluoroethane	<0.300	20.0	16.0	80	17.4	87	64-125	8	22	ug/L	05.21.18 10:53	
1,3-Butadiene	<0.276	20.0	19.5	98	18.8	94	58-134	4	20	ug/L	05.21.18 10:53	
Cyclohexane	<0.115	20.0	18.6	93	18.0	90	70-130	3	21	ug/L	05.21.18 10:53	
Dicyclopentadiene	<0.0540	20.0	18.4	92	17.7	89	70-130	4	20	ug/L	05.21.18 10:53	
Methylcyclohexane	<0.117	20.0	20.0	100	19.5	98	70-130	3	20	ug/L	05.21.18 10:53	
n-Hexane	<0.0920	20.0	17.8	89	17.2	86	67-130	3	20	ug/L	05.21.18 10:53	

Surrogate	MB %Rec	MB Flag	LCS %Rec	LCS Flag	LCSD %Rec	LCSD Flag	Limits	Units	Analysis Date
4-Bromofluorobenzene	96		94		93		74-124	%	05.21.18 10:53
Dibromofluoromethane	97		102		102		75-131	%	05.21.18 10:53
1,2-Dichloroethane-D4	107		106		109		63-144	%	05.21.18 10:53
Toluene-D8	100		102		102		80-117	%	05.21.18 10:53

MS/MSD Percent Recovery	[D] = 100*(C-A) / B	LCS = Laboratory Control Sample	MS = Matrix Spike
Relative Percent Difference	RPD = 200* | (C-E) / (C+E) |	A = Parent Result	B = Spike Added
LCS/LCSD Recovery	[D] = 100 * (C) / [B]	C = MS/LCS Result	D = MSD/LCSD % Rec
Log Difference	Log Diff. = Log(Sample Duplicate) - Log(Original Sample)	E = MSD/LCSD Result	

QC Summary 585543

AMEC Foster Wheeler

Cave Creek Landfill - Maricopa

Analytical Method: VOCs by SW 8260B Prep Method: SW5030C

Seq Number: 3050960 Matrix: Water Date Prep: 05.22.18

MB Sample Id: 7645233-1-BLK LCS Sample Id: 7645233-1-BKS LCSD Sample Id: 7645233-1-BSD

Parameter	MB Result	Spike Amount	LCS Result	LCS %Rec	LCSD Result	LCSD %Rec	Limits	%RPD	RPD Limit	Units	Analysis Date	Flag
1,1,1,2-Tetrachloroethane	<0.100	20.0	19.4	97	21.8	109	70-130	12	20	ug/L	05.22.18 13:28	
1,1,1-Trichloroethane	<0.200	20.0	17.9	90	19.9	100	70-130	11	20	ug/L	05.22.18 13:28	
1,1,2,2-Tetrachloroethane	<0.100	20.0	14.6	73	16.4	82	70-130	12	20	ug/L	05.22.18 13:28	
1,1,2-Trichloroethane	<0.0900	20.0	15.9	80	18.5	93	70-130	15	20	ug/L	05.22.18 13:28	
1,1-Dichloroethane	<0.0700	20.0	16.2	81	17.9	90	70-130	10	20	ug/L	05.22.18 13:28	
1,1-Dichloroethene	<0.200	20.0	16.3	82	18.1	91	70-130	10	21	ug/L	05.22.18 13:28	
1,1-Dichloropropene	<0.200	20.0	18.5	93	21.1	106	70-130	13	20	ug/L	05.22.18 13:28	
1,2,3-Trichlorobenzene	<0.200	20.0	17.7	89	21.3	107	70-130	18	27	ug/L	05.22.18 13:28	
1,2,3-Trichloropropane	<0.200	20.0	16.9	85	18.1	91	70-130	7	20	ug/L	05.22.18 13:28	
1,2,4-Trichlorobenzene	<0.0700	20.0	18.8	94	22.7	114	70-130	19	20	ug/L	05.22.18 13:28	
1,2,4-Trimethylbenzene	<0.0700	20.0	17.6	88	19.6	98	70-130	11	20	ug/L	05.22.18 13:28	
1,2-Dibromo-3-Chloropropane	<0.300	20.0	13.6	68	15.1	76	70-130	10	21	ug/L	05.22.18 13:28	L2
1,2-Dibromoethane	<0.200	20.0	16.7	84	19.2	96	70-130	14	20	ug/L	05.22.18 13:28	
1,2-Dichlorobenzene	<0.0800	20.0	19.7	99	22.2	111	70-130	12	20	ug/L	05.22.18 13:28	
1,2-Dichloroethane	<0.100	20.0	17.1	86	19.9	100	70-130	15	20	ug/L	05.22.18 13:28	
1,2-Dichloropropane	<0.0900	20.0	16.6	83	19.1	96	70-130	14	20	ug/L	05.22.18 13:28	
1,3,5-Trimethylbenzene	<0.0700	20.0	18.0	90	20.6	103	70-130	13	20	ug/L	05.22.18 13:28	
1,3-Dichlorobenzene	<0.0600	20.0	18.8	94	21.3	107	70-130	12	20	ug/L	05.22.18 13:28	
1,3-Dichloropropane	<0.0700	20.0	16.4	82	18.6	93	70-130	13	20	ug/L	05.22.18 13:28	
1,4-Dichlorobenzene	<0.200	20.0	18.4	92	21.2	106	70-130	14	20	ug/L	05.22.18 13:28	
2,2-Dichloropropane	<0.200	20.0	17.5	88	20.0	100	70-130	13	24	ug/L	05.22.18 13:28	
2-Butanone	<0.300	40.0	25.6	64	27.5	69	51-116	7	27	ug/L	05.22.18 13:28	
2-Chlorotoluene	<0.0800	20.0	17.7	89	19.7	99	70-130	11	20	ug/L	05.22.18 13:28	
2-Hexanone	<0.200	40.0	24.3	61	29.1	73	59-101	18	20	ug/L	05.22.18 13:28	
4-Chlorotoluene	<0.0700	20.0	17.4	87	20.0	100	70-130	14	28	ug/L	05.22.18 13:28	
4-Methyl-2-Pentanone	<0.200	40.0	25.2	63	27.3	68	57-106	8	21	ug/L	05.22.18 13:28	
Acetone	<0.600	40.0	20.8	52	24.8	62	47-128	18	28	ug/L	05.22.18 13:28	
Benzene	<0.100	20.0	17.6	88	20.5	103	70-130	15	20	ug/L	05.22.18 13:28	
Bromobenzene	<0.0900	20.0	18.5	93	20.9	105	70-130	12	20	ug/L	05.22.18 13:28	
Bromochloromethane	<0.200	20.0	19.0	95	21.5	108	70-130	12	24	ug/L	05.22.18 13:28	
Bromodichloromethane	<0.0800	20.0	17.2	86	19.6	98	70-130	13	20	ug/L	05.22.18 13:28	
Bromoform	<0.100	20.0	16.4	82	19.2	96	66-132	16	20	ug/L	05.22.18 13:28	
Bromomethane	<0.300	20.0	22.4	112	20.9	105	63-130	7	25	ug/L	05.22.18 13:28	
Carbon Disulfide	<0.0900	20.0	18.1	91	20.1	101	70-130	10	22	ug/L	05.22.18 13:28	
Carbon Tetrachloride	<0.200	20.0	18.3	92	21.4	107	70-130	16	21	ug/L	05.22.18 13:28	
Chlorobenzene	<0.0700	20.0	21.2	106	23.7	119	70-130	11	20	ug/L	05.22.18 13:28	
Chloroethane	<0.600	20.0	20.4	102	22.2	111	70-140	8	24	ug/L	05.22.18 13:28	
Chloroform	<0.0700	20.0	16.6	83	18.7	94	70-130	12	24	ug/L	05.22.18 13:28	
Chloromethane	<0.200	20.0	19.7	99	21.9	110	25-130	11	26	ug/L	05.22.18 13:28	
cis-1,2-Dichloroethene	<0.200	20.0	17.1	86	19.1	96	70-130	11	24	ug/L	05.22.18 13:28	
cis-1,3-Dichloropropene	<0.0800	20.0	17.2	86	20.0	100	70-130	15	20	ug/L	05.22.18 13:28	
Dibromochloromethane	<0.0700	20.0	17.3	87	19.8	99	70-130	13	20	ug/L	05.22.18 13:28	
Dibromomethane	<0.200	20.0	16.4	82	19.2	96	70-130	16	23	ug/L	05.22.18 13:28	
Dichlorodifluoromethane	<0.200	20.0	26.2	131	29.2	146	25-136	11	27	ug/L	05.22.18 13:28	L1
Ethylbenzene	<0.0900	20.0	18.5	93	20.9	105	70-130	12	20	ug/L	05.22.18 13:28	
Hexachlorobutadiene	<0.200	20.0	19.9	100	22.9	115	63-139	14	22	ug/L	05.22.18 13:28	
Iodomethane (Methyl Iodide)	<0.300	20.0	18.1	91	19.5	98	70-130	7	22	ug/L	05.22.18 13:28	
isopropylbenzene	<0.0800	20.0	18.8	94	21.6	108	70-130	14	20	ug/L	05.22.18 13:28	
m,p-Xylenes	<0.0900	40.0	39.6	99	44.1	110	70-130	11	20	ug/L	05.22.18 13:28	

MS/MSD Percent Recovery	[D] = 100*(C-A) / B	LCS = Laboratory Control Sample	MS = Matrix Spike
Relative Percent Difference	RPD = 200* | (C-E) / (C+E) |	A = Parent Result	B = Spike Added
LCS/LCSD Recovery	[D] = 100 * (C) / [B]	C = MS/LCS Result	D = MSD/LCSD % Rec
Log Difference	Log Diff. = Log(Sample Duplicate) - Log(Original Sample)	E = MSD/LCSD Result	

QC Summary 585543

AMEC Foster Wheeler

Cave Creek Landfill - Maricopa

Analytical Method: VOCs by SW 8260B Prep Method: SW5030C

Seq Number: 3050960 Matrix: Water Date Prep: 05.22.18

MB Sample Id: 7645233-1-BLK LCS Sample Id: 7645233-1-BKS LCSD Sample Id: 7645233-1-BSD

Parameter	MB Result	Spike Amount	LCS Result	LCS %Rec	LCSD Result	LCSD %Rec	Limits	%RPD	RPD Limit	Units	Analysis Date	Flag
Methylene Chloride	<0.200	20.0	15.6	78	16.8	84	70-130	7	20	ug/L	05.22.18 13:28	
MTBE	<0.100	20.0	15.2	76	16.9	85	70-130	11	21	ug/L	05.22.18 13:28	
Naphthalene	<0.200	20.0	14.2	71	16.6	83	70-130	16	27	ug/L	05.22.18 13:28	
n-Butylbenzene	<0.200	20.0	17.6	88	20.0	100	70-130	13	20	ug/L	05.22.18 13:28	
n-Propylbenzene	<0.0800	20.0	17.9	90	20.0	100	70-130	11	20	ug/L	05.22.18 13:28	
o-Xylene	<0.0900	20.0	19.2	96	22.3	112	70-130	15	20	ug/L	05.22.18 13:28	
p-Cymene (p-Isopropyltoluene)	<0.100	20.0	19.2	96	21.8	109	70-130	13	20	ug/L	05.22.18 13:28	
Sec-Butylbenzene	<0.100	20.0	17.6	88	20.5	103	70-130	15	20	ug/L	05.22.18 13:28	
Styrene	<0.0800	20.0	18.6	93	21.8	109	70-130	16	20	ug/L	05.22.18 13:28	
tert-Butylbenzene	<0.200	20.0	20.9	105	23.3	117	70-130	11	20	ug/L	05.22.18 13:28	
Tetrachloroethylene	<0.0800	20.0	21.1	106	23.8	119	70-130	12	20	ug/L	05.22.18 13:28	
Toluene	<0.0700	20.0	19.6	98	21.8	109	70-130	11	20	ug/L	05.22.18 13:28	
trans-1,2-dichloroethene	<0.0900	20.0	16.3	82	18.1	91	70-130	10	21	ug/L	05.22.18 13:28	
Trichloroethene	<0.200	20.0	18.4	92	20.9	105	70-130	13	20	ug/L	05.22.18 13:28	
Trichlorofluoromethane	<0.400	20.0	25.9	130	28.5	143	70-130	10	22	ug/L	05.22.18 13:28	N1
Vinyl Acetate	<0.200	20.0	13.2	66	14.6	73	46-172	10	22	ug/L	05.22.18 13:28	
Vinyl Chloride	<0.100	20.0	18.8	94	20.8	104	41-132	10	25	ug/L	05.22.18 13:28	
trans-1,3-dichloropropene	<0.0600	20.0	16.4	82	19.0	95	70-130	15	20	ug/L	05.22.18 13:28	
1,1,2-Trichloro-1,2,2-Trifluoroethane	<0.300	20.0	19.8	99	21.6	108	64-125	9	22	ug/L	05.22.18 13:28	
1,3-Butadiene	<0.276	20.0	18.6	93	20.0	100	58-134	7	20	ug/L	05.22.18 13:28	
Cyclohexane	<0.115	20.0	18.4	92	20.8	104	70-130	12	21	ug/L	05.22.18 13:28	
Dicyclopentadiene	<0.0540	20.0	16.3	82	18.3	92	70-130	12	20	ug/L	05.22.18 13:28	
Methylcyclohexane	<0.117	20.0	19.7	99	22.3	112	70-130	12	20	ug/L	05.22.18 13:28	
n-Hexane	<0.0920	20.0	16.5	83	18.9	95	67-130	14	20	ug/L	05.22.18 13:28	

Surrogate	MB %Rec	MB Flag	LCS %Rec	LCS Flag	LCSD %Rec	LCSD Flag	Limits	Units	Analysis Date
4-Bromofluorobenzene	90		97		98		74-124	%	05.22.18 13:28
Dibromofluoromethane	90		102		97		75-131	%	05.22.18 13:28
1,2-Dichloroethane-D4	88		102		98		63-144	%	05.22.18 13:28
Toluene-D8	90		100		99		80-117	%	05.22.18 13:28

MS/MSD Percent Recovery	[D] = 100*(C-A) / B	LCS = Laboratory Control Sample	MS = Matrix Spike
Relative Percent Difference	RPD = 200* | (C-E) / (C+E) |	A = Parent Result	B = Spike Added
LCS/LCSD Recovery	[D] = 100 * (C) / [B]	C = MS/LCS Result	D = MSD/LCSD % Rec
Log Difference	Log Diff. = Log(Sample Duplicate) - Log(Original Sample)	E = MSD/LCSD Result	

QC Summary 585543

AMEC Foster Wheeler

Cave Creek Landfill - Maricopa

Analytical Method: **VOCs by SW 8260B** Prep Method: SW5030C

Seq Number: 3051314 Matrix: Water Date Prep: 05.24.18

MB Sample Id: 7645426-1-BLK LCS Sample Id: 7645426-1-BKS LCSD Sample Id: 7645426-1-BSD

Parameter	MB Result	Spike Amount	LCS Result	LCS %Rec	LCSD Result	LCSD %Rec	Limits	%RPD	RPD Limit	Units	Analysis Date	Flag
Acetone	<0.600	40.0	46.7	117	47.2	118	47-128	1	28	ug/L	05.24.18 16:36	
m,p-Xylenes	<0.0900	40.0	47.5	119	47.6	119	70-130	0	20	ug/L	05.24.18 16:36	
o-Xylene	<0.0900	20.0	23.3	117	23.9	120	70-130	3	20	ug/L	05.24.18 16:36	

Surrogate	MB %Rec	MB Flag	LCS %Rec	LCS Flag	LCSD %Rec	LCSD Flag	Limits	Units	Analysis Date
4-Bromofluorobenzene	99		100		104		74-124	%	05.24.18 16:36
Dibromofluoromethane	102		107		109		75-131	%	05.24.18 16:36
1,2-Dichloroethane-D4	102		107		111		63-144	%	05.24.18 16:36
Toluene-D8	100		104		107		80-117	%	05.24.18 16:36

MS/MSD Percent Recovery	[D] = 100*(C-A) / B	LCS = Laboratory Control Sample	MS = Matrix Spike
Relative Percent Difference	RPD = 200* | (C-E) / (C+E) |	A = Parent Result	B = Spike Added
LCS/LCSD Recovery	[D] = 100 * (C) / [B]	C = MS/LCS Result	D = MSD/LCSD % Rec
Log Difference	Log Diff. = Log(Sample Duplicate) - Log(Original Sample)	E = MSD/LCSD Result	

QC Summary 585543

AMEC Foster Wheeler

Cave Creek Landfill - Maricopa

Analytical Method: **VOCs by SW 8260B** Prep Method: SW5030C

Seq Number: 3051122 Matrix: Water Date Prep: 05.21.18

Parent Sample Id: 585543-001 MS Sample Id: 585543-001 S MSD Sample Id: 585543-001 SD

Parameter	Parent Result	Spike Amount	MS Result	MS %Rec	MSD Result	MSD %Rec	Limits	%RPD	RPD Limit	Units	Analysis Date	Flag
1,1,1,2-Tetrachloroethane	<0.100	20.0	18.9	95	19.2	96	70-130	2	20	ug/L	05.21.18 11:45	
1,1,1-Trichloroethane	<0.200	20.0	17.2	86	17.6	88	70-130	2	20	ug/L	05.21.18 11:45	
1,1,2,2-Tetrachloroethane	<0.100	20.0	17.6	88	18.3	92	70-130	4	20	ug/L	05.21.18 11:45	
1,1,2-Trichloroethane	<0.0900	20.0	17.4	87	18.1	91	70-130	4	20	ug/L	05.21.18 11:45	
1,1-Dichloroethane	1.35	20.0	19.4	90	19.1	89	70-130	2	20	ug/L	05.21.18 11:45	
1,1-Dichloroethene	<0.200	20.0	16.6	83	17.2	86	63-144	4	20	ug/L	05.21.18 11:45	
1,1-Dichloropropene	<0.200	20.0	18.6	93	18.7	94	70-130	1	20	ug/L	05.21.18 11:45	
1,2,3-Trichlorobenzene	<0.200	20.0	20.4	102	20.2	101	70-130	1	24	ug/L	05.21.18 11:45	
1,2,3-Trichloropropane	<0.200	20.0	18.4	92	20.4	102	70-130	10	20	ug/L	05.21.18 11:45	
1,2,4-Trichlorobenzene	<0.0700	20.0	21.0	105	21.0	105	70-130	0	20	ug/L	05.21.18 11:45	
1,2,4-Trimethylbenzene	<0.0700	20.0	18.0	90	18.3	92	70-130	2	22	ug/L	05.21.18 11:45	
1,2-Dibromo-3-Chloropropane	<0.300	20.0	18.3	92	18.2	91	70-130	1	22	ug/L	05.21.18 11:45	
1,2-Dibromoethane	<0.200	20.0	17.7	89	18.4	92	70-130	4	20	ug/L	05.21.18 11:45	
1,2-Dichlorobenzene	<0.0800	20.0	20.4	102	20.6	103	70-130	1	20	ug/L	05.21.18 11:45	
1,2-Dichloroethane	<0.100	20.0	18.8	94	19.4	97	70-130	3	20	ug/L	05.21.18 11:45	
1,2-Dichloropropane	<0.0900	20.0	17.7	89	18.1	91	70-130	2	20	ug/L	05.21.18 11:45	
1,3,5-Trimethylbenzene	<0.0700	20.0	18.4	92	18.8	94	70-130	2	20	ug/L	05.21.18 11:45	
1,3-Dichlorobenzene	<0.0600	20.0	19.3	97	19.7	99	70-130	2	20	ug/L	05.21.18 11:45	
1,3-Dichloropropane	<0.0700	20.0	17.6	88	17.6	88	70-130	0	20	ug/L	05.21.18 11:45	
1,4-Dichlorobenzene	<0.200	20.0	19.2	96	19.3	97	70-130	1	20	ug/L	05.21.18 11:45	
2,2-Dichloropropane	<0.200	20.0	17.9	90	18.5	93	70-130	3	20	ug/L	05.21.18 11:45	
2-Butanone	<0.300	40.0	46.1	115	48.4	121	40-133	5	22	ug/L	05.21.18 11:45	
2-Chlorotoluene	<0.0800	20.0	17.9	90	18.0	90	70-130	1	20	ug/L	05.21.18 11:45	
2-Hexanone	<0.200	40.0	32.9	82	36.4	91	61-106	10	33	ug/L	05.21.18 11:45	
4-Chlorotoluene	<0.0700	20.0	18.1	91	17.8	89	70-130	2	20	ug/L	05.21.18 11:45	
4-Methyl-2-Pentanone	<0.200	40.0	34.1	85	37.1	93	70-130	8	20	ug/L	05.21.18 11:45	
Acetone	93.9	40.0	134	100	144	125	7-174	7	20	ug/L	05.21.18 11:45	
Benzene	<0.100	20.0	18.3	92	18.6	93	70-130	2	20	ug/L	05.21.18 11:45	
Bromobenzene	<0.0900	20.0	18.9	95	19.3	97	70-130	2	20	ug/L	05.21.18 11:45	
Bromochloromethane	<0.200	20.0	18.5	93	19.0	95	70-130	3	22	ug/L	05.21.18 11:45	
Bromodichloromethane	<0.0800	20.0	18.3	92	18.2	91	70-130	1	20	ug/L	05.21.18 11:45	
Bromoform	<0.100	20.0	18.4	92	19.0	95	70-130	3	20	ug/L	05.21.18 11:45	
Bromomethane	<0.300	20.0	17.1	86	17.4	87	43-147	2	22	ug/L	05.21.18 11:45	
Carbon Disulfide	<0.0900	20.0	18.2	91	18.4	92	50-137	1	28	ug/L	05.21.18 11:45	
Carbon Tetrachloride	<0.200	20.0	17.8	89	18.1	91	67-136	2	20	ug/L	05.21.18 11:45	
Chlorobenzene	<0.0700	20.0	20.4	102	21.0	105	70-130	3	20	ug/L	05.21.18 11:45	
Chloroethane	<0.600	20.0	18.6	93	19.1	96	57-156	3	20	ug/L	05.21.18 11:45	
Chloroform	<0.0700	20.0	17.0	85	17.2	86	70-130	1	22	ug/L	05.21.18 11:45	
Chloromethane	<0.200	20.0	19.9	100	21.8	109	24-129	9	22	ug/L	05.21.18 11:45	
cis-1,2-Dichloroethene	2.33	20.0	21.3	95	21.7	97	70-130	2	20	ug/L	05.21.18 11:45	
cis-1,3-Dichloropropene	<0.0800	20.0	18.1	91	18.1	91	70-130	0	20	ug/L	05.21.18 11:45	
Dibromochloromethane	<0.0700	20.0	18.1	91	18.2	91	70-130	1	20	ug/L	05.21.18 11:45	
Dibromomethane	<0.200	20.0	17.6	88	18.5	93	70-130	5	20	ug/L	05.21.18 11:45	
Dichlorodifluoromethane	1.73	20.0	25.2	117	24.1	112	21-138	4	33	ug/L	05.21.18 11:45	
Ethylbenzene	<0.0900	20.0	18.6	93	19.0	95	70-130	2	20	ug/L	05.21.18 11:45	
Hexachlorobutadiene	<0.200	20.0	20.1	101	20.8	104	64-143	3	20	ug/L	05.21.18 11:45	
Iodomethane (Methyl Iodide)	<0.300	20.0	15.1	76	14.3	72	59-133	5	20	ug/L	05.21.18 11:45	
isopropylbenzene	<0.0800	20.0	18.9	95	19.1	96	70-130	1	20	ug/L	05.21.18 11:45	
m,p-Xylenes	<0.0900	40.0	39.1	98	40.7	102	70-130	4	20	ug/L	05.21.18 11:45	

MS/MSD Percent Recovery	[D] = 100*(C-A) / B	LCS = Laboratory Control Sample	MS = Matrix Spike
Relative Percent Difference	RPD = 200* | (C-E) / (C+E) |	A = Parent Result	B = Spike Added
LCS/LCSD Recovery	[D] = 100 * (C) / [B]	C = MS/LCS Result	D = MSD/LCSD % Rec
Log Difference	Log Diff. = Log(Sample Duplicate) - Log(Original Sample)	E = MSD/LCSD Result	

QC Summary 585543

AMEC Foster Wheeler

Cave Creek Landfill - Maricopa

Analytical Method: VOCs by SW 8260B Prep Method: SW5030C

Seq Number: 3051122 Matrix: Water Date Prep: 05.21.18

Parent Sample Id: 585543-001 MS Sample Id: 585543-001 S MSD Sample Id: 585543-001 SD

Parameter	Parent Result	Spike Amount	MS Result	MS %Rec	MSD Result	MSD %Rec	Limits	%RPD	RPD Limit	Units	Analysis Date	Flag
Methylene Chloride	<0.200	20.0	15.1	76	15.2	76	65-127	1	20	ug/L	05.21.18 11:45	
MTBE	<0.100	20.0	16.9	85	17.5	88	69-135	3	20	ug/L	05.21.18 11:45	
Naphthalene	<0.200	20.0	17.8	89	18.3	92	70-130	3	26	ug/L	05.21.18 11:45	
n-Butylbenzene	<0.200	20.0	18.9	95	18.8	94	70-130	1	20	ug/L	05.21.18 11:45	
n-Propylbenzene	<0.0800	20.0	17.9	90	18.1	91	70-130	1	20	ug/L	05.21.18 11:45	
o-Xylene	<0.0900	20.0	19.6	98	19.8	99	70-130	1	20	ug/L	05.21.18 11:45	
p-Cymene (p-Isopropyltoluene)	<0.100	20.0	18.9	95	19.5	98	70-130	3	20	ug/L	05.21.18 11:45	
Sec-Butylbenzene	<0.100	20.0	18.4	92	18.4	92	70-130	0	20	ug/L	05.21.18 11:45	
Styrene	<0.0800	20.0	19.2	96	19.2	96	37-156	0	37	ug/L	05.21.18 11:45	
tert-Butylbenzene	<0.200	20.0	21.9	110	21.4	107	70-130	2	20	ug/L	05.21.18 11:45	
Tetrachloroethylene	1.80	20.0	25.2	117	24.8	115	70-130	2	20	ug/L	05.21.18 11:45	
Toluene	<0.0700	20.0	19.6	98	19.8	99	70-130	1	20	ug/L	05.21.18 11:45	
trans-1,2-dichloroethene	<0.0900	20.0	16.6	83	17.0	85	69-131	2	20	ug/L	05.21.18 11:45	
Trichloroethene	86.8	20.0	130	216	126	196	70-130	3	20	ug/L	05.21.18 11:45	M3
Trichlorofluoromethane	<0.400	20.0	22.8	114	22.4	112	60-133	2	20	ug/L	05.21.18 11:45	
Vinyl Acetate	<0.200	20.0	15.5	78	16.1	81	32-156	4	23	ug/L	05.21.18 11:45	
Vinyl Chloride	<0.100	20.0	19.4	97	19.1	96	35-139	2	21	ug/L	05.21.18 11:45	
trans-1,3-dichloropropene	<0.0600	20.0	18.0	90	18.3	92	70-130	2	20	ug/L	05.21.18 11:45	
1,1,2-Trichloro-1,2,2-Trifluoroethane	<0.300	20.0	16.4	82	16.3	82	51-131	1	20	ug/L	05.21.18 11:45	
1,3-Butadiene	<0.276	20.0	20.1	101	19.6	98	37-152	3	20	ug/L	05.21.18 11:45	
Cyclohexane	<0.115	20.0	18.1	91	18.2	91	64-138	1	20	ug/L	05.21.18 11:45	
Dicyclopentadiene	<0.0540	20.0	17.5	88	17.4	87	13-182	1	20	ug/L	05.21.18 11:45	
Methylcyclohexane	<0.117	20.0	19.6	98	19.9	100	70-130	2	20	ug/L	05.21.18 11:45	
n-Hexane	<0.0920	20.0	17.6	88	17.9	90	62-128	2	20	ug/L	05.21.18 11:45	

Surrogate	MS %Rec	MS Flag	MSD %Rec	MSD Flag	Limits	Units	Analysis Date
4-Bromofluorobenzene	94		100		74-124	%	05.21.18 11:45
Dibromofluoromethane	93		97		75-131	%	05.21.18 11:45
1,2-Dichloroethane-D4	102		105		63-144	%	05.21.18 11:45
Toluene-D8	100		102		80-117	%	05.21.18 11:45

MS/MSD Percent Recovery [D] = 100*(C-A) / B
Relative Percent Difference RPD = 200* | (C-E) / (C+E) |
LCS/LCSD Recovery [D] = 100 * (C) / [B]
Log Difference Log Diff. = Log(Sample Duplicate) - Log(Original Sample)

LCS = Laboratory Control Sample
A = Parent Result
C = MS/LCS Result
E = MSD/LCSD Result

MS = Matrix Spike
B = Spike Added
D = MSD/LCSD % Rec

QC Summary 585543

AMEC Foster Wheeler

Cave Creek Landfill - Maricopa

Analytical Method: VOCs by SW 8260B Prep Method: SW5030C

Seq Number: 3050960 Matrix: Water Date Prep: 05.22.18

Parent Sample Id: 585543-007 MS Sample Id: 585543-007 S MSD Sample Id: 585543-007 SD

Parameter	Parent Result	Spike Amount	MS Result	MS %Rec	MSD Result	MSD %Rec	Limits	%RPD	RPD Limit	Units	Analysis Date	Flag
1,1,1,2-Tetrachloroethane	<0.100	20.0	21.0	105	19.5	98	70-130	7	20	ug/L	05.22.18 14:28	
1,1,1-Trichloroethane	<0.200	20.0	18.5	93	18.0	90	70-130	3	20	ug/L	05.22.18 14:28	
1,1,2,2-Tetrachloroethane	<0.100	20.0	15.7	79	14.7	74	70-130	7	20	ug/L	05.22.18 14:28	
1,1,2-Trichloroethane	<0.0900	20.0	17.8	89	16.9	85	70-130	5	20	ug/L	05.22.18 14:28	
1,1-Dichloroethane	<0.0700	20.0	16.7	84	16.2	81	70-130	3	20	ug/L	05.22.18 14:28	
1,1-Dichloroethene	<0.200	20.0	16.7	84	16.0	80	63-144	4	20	ug/L	05.22.18 14:28	
1,1-Dichloropropene	<0.200	20.0	20.1	101	19.6	98	70-130	3	20	ug/L	05.22.18 14:28	
1,2,3-Trichlorobenzene	<0.200	20.0	21.0	105	19.3	97	70-130	8	24	ug/L	05.22.18 14:28	
1,2,3-Trichloropropane	<0.200	20.0	18.3	92	16.9	85	70-130	8	20	ug/L	05.22.18 14:28	
1,2,4-Trichlorobenzene	<0.0700	20.0	21.8	109	21.1	106	70-130	3	20	ug/L	05.22.18 14:28	
1,2,4-Trimethylbenzene	<0.0700	20.0	19.6	98	18.3	92	70-130	7	22	ug/L	05.22.18 14:28	
1,2-Dibromo-3-Chloropropane	<0.300	20.0	15.0	75	14.4	72	70-130	4	22	ug/L	05.22.18 14:28	
1,2-Dibromoethane	<0.200	20.0	18.2	91	17.2	86	70-130	6	20	ug/L	05.22.18 14:28	
1,2-Dichlorobenzene	<0.0800	20.0	21.3	107	20.7	104	70-130	3	20	ug/L	05.22.18 14:28	
1,2-Dichloroethane	<0.100	20.0	18.3	92	17.7	89	70-130	3	20	ug/L	05.22.18 14:28	
1,2-Dichloropropane	<0.0900	20.0	17.9	90	17.6	88	70-130	2	20	ug/L	05.22.18 14:28	
1,3,5-Trimethylbenzene	<0.0700	20.0	20.0	100	19.2	96	70-130	4	20	ug/L	05.22.18 14:28	
1,3-Dichlorobenzene	<0.0600	20.0	20.8	104	20.1	101	70-130	3	20	ug/L	05.22.18 14:28	
1,3-Dichloropropane	<0.0700	20.0	20.3	102	17.3	87	70-130	16	20	ug/L	05.22.18 14:28	
1,4-Dichlorobenzene	<0.200	20.0	20.0	100	19.9	100	70-130	1	20	ug/L	05.22.18 14:28	
2,2-Dichloropropane	<0.200	20.0	18.9	95	18.1	91	70-130	4	20	ug/L	05.22.18 14:28	
2-Butanone	<0.300	40.0	28.3	71	26.4	66	40-133	7	22	ug/L	05.22.18 14:28	
2-Chlorotoluene	<0.0800	20.0	19.3	97	18.8	94	70-130	3	20	ug/L	05.22.18 14:28	
2-Hexanone	<0.200	40.0	27.2	68	24.6	62	61-106	10	33	ug/L	05.22.18 14:28	
4-Chlorotoluene	<0.0700	20.0	19.4	97	18.7	94	70-130	4	20	ug/L	05.22.18 14:28	
4-Methyl-2-Pentanone	<0.200	40.0	27.0	68	25.0	63	70-130	8	20	ug/L	05.22.18 14:28	M2
Acetone	61.9	40.0	77.3	39	85.1	58	7-174	10	20	ug/L	05.22.18 14:28	
Benzene	<0.100	20.0	19.4	97	18.7	94	70-130	4	20	ug/L	05.22.18 14:28	
Bromobenzene	<0.0900	20.0	20.6	103	19.9	100	70-130	3	20	ug/L	05.22.18 14:28	
Bromochloromethane	<0.200	20.0	18.8	94	18.9	95	70-130	1	22	ug/L	05.22.18 14:28	
Bromodichloromethane	<0.0800	20.0	17.9	90	17.5	88	70-130	2	20	ug/L	05.22.18 14:28	
Bromoform	<0.100	20.0	17.9	90	16.4	82	70-130	9	20	ug/L	05.22.18 14:28	
Bromomethane	<0.300	20.0	18.2	91	18.8	94	43-147	3	22	ug/L	05.22.18 14:28	
Carbon Disulfide	<0.0900	20.0	18.5	93	18.0	90	50-137	3	28	ug/L	05.22.18 14:28	
Carbon Tetrachloride	<0.200	20.0	20.3	102	18.7	94	67-136	8	20	ug/L	05.22.18 14:28	
Chlorobenzene	<0.0700	20.0	23.4	117	22.4	112	70-130	4	20	ug/L	05.22.18 14:28	
Chloroethane	<0.600	20.0	19.8	99	20.9	105	57-156	5	20	ug/L	05.22.18 14:28	
Chloroform	<0.0700	20.0	17.6	88	17.1	86	70-130	3	22	ug/L	05.22.18 14:28	
Chloromethane	<0.200	20.0	24.0	120	20.7	104	24-129	15	22	ug/L	05.22.18 14:28	
cis-1,2-Dichloroethene	<0.200	20.0	19.5	98	18.8	94	70-130	4	20	ug/L	05.22.18 14:28	
cis-1,3-Dichloropropene	<0.0800	20.0	18.3	92	17.9	90	70-130	2	20	ug/L	05.22.18 14:28	
Dibromochloromethane	<0.0700	20.0	18.7	94	17.6	88	70-130	6	20	ug/L	05.22.18 14:28	
Dibromomethane	<0.200	20.0	17.3	87	17.3	87	70-130	0	20	ug/L	05.22.18 14:28	
Dichlorodifluoromethane	<0.200	20.0	26.4	132	26.4	132	21-138	0	33	ug/L	05.22.18 14:28	
Ethylbenzene	<0.0900	20.0	20.7	104	19.6	98	70-130	5	20	ug/L	05.22.18 14:28	
Hexachlorobutadiene	<0.200	20.0	22.7	114	21.1	106	64-143	7	20	ug/L	05.22.18 14:28	
Iodomethane (Methyl Iodide)	<0.300	20.0	15.7	79	18.8	94	59-133	18	20	ug/L	05.22.18 14:28	
isopropylbenzene	<0.0800	20.0	20.7	104	19.8	99	70-130	4	20	ug/L	05.22.18 14:28	
m,p-Xylenes	<0.0900	40.0	44.1	110	41.8	105	70-130	5	20	ug/L	05.22.18 14:28	

MS/MSD Percent Recovery	[D] = 100*(C-A) / B	LCS = Laboratory Control Sample	MS = Matrix Spike
Relative Percent Difference	RPD = 200* | (C-E) / (C+E) |	A = Parent Result	B = Spike Added
LCS/LCSD Recovery	[D] = 100 * (C) / [B]	C = MS/LCS Result	D = MSD/LCSD % Rec
Log Difference	Log Diff. = Log(Sample Duplicate) - Log(Original Sample)	E = MSD/LCSD Result	

QC Summary 585543

AMEC Foster Wheeler

Cave Creek Landfill - Maricopa

Analytical Method: VOCs by SW 8260B Prep Method: SW5030C

Seq Number: 3050960 Matrix: Water Date Prep: 05.22.18

Parent Sample Id: 585543-007 MS Sample Id: 585543-007 S MSD Sample Id: 585543-007 SD

Parameter	Parent Result	Spike Amount	MS Result	MS %Rec	MSD Result	MSD %Rec	Limits	%RPD	RPD Limit	Units	Analysis Date	Flag
Methylene Chloride	<0.200	20.0	15.0	75	14.9	75	65-127	1	20	ug/L	05.22.18 14:28	
MTBE	<0.100	20.0	15.0	75	14.9	75	69-135	1	20	ug/L	05.22.18 14:28	
Naphthalene	<0.200	20.0	16.3	82	15.0	75	70-130	8	26	ug/L	05.22.18 14:28	
n-Butylbenzene	<0.200	20.0	19.4	97	18.8	94	70-130	3	20	ug/L	05.22.18 14:28	
n-Propylbenzene	<0.0800	20.0	19.5	98	18.9	95	70-130	3	20	ug/L	05.22.18 14:28	
o-Xylene	<0.0900	20.0	21.3	107	20.5	103	70-130	4	20	ug/L	05.22.18 14:28	
p-Cymene (p-Isopropyltoluene)	<0.100	20.0	21.2	106	20.7	104	70-130	2	20	ug/L	05.22.18 14:28	
Sec-Butylbenzene	<0.100	20.0	19.8	99	19.0	95	70-130	4	20	ug/L	05.22.18 14:28	
Styrene	<0.0800	20.0	20.4	102	19.8	99	37-156	3	37	ug/L	05.22.18 14:28	
tert-Butylbenzene	<0.200	20.0	23.7	119	22.6	113	70-130	5	20	ug/L	05.22.18 14:28	
Tetrachloroethylene	<0.0800	20.0	24.4	122	23.3	117	70-130	5	20	ug/L	05.22.18 14:28	
Toluene	<0.0700	20.0	22.1	111	21.0	105	70-130	5	20	ug/L	05.22.18 14:28	
trans-1,2-dichloroethene	<0.0900	20.0	16.5	83	15.9	80	69-131	4	20	ug/L	05.22.18 14:28	
Trichloroethene	16.5	20.0	40.2	119	39.4	115	70-130	2	20	ug/L	05.22.18 14:28	
Trichlorofluoromethane	<0.400	20.0	27.8	139	26.1	131	60-133	6	20	ug/L	05.22.18 14:28	N1
Vinyl Acetate	<0.200	20.0	13.7	69	13.1	66	32-156	4	23	ug/L	05.22.18 14:28	
Vinyl Chloride	<0.100	20.0	21.0	105	19.3	97	35-139	8	21	ug/L	05.22.18 14:28	
trans-1,3-dichloropropene	<0.0600	20.0	18.1	91	17.1	86	70-130	6	20	ug/L	05.22.18 14:28	
1,1,2-Trichloro-1,2,2-Trifluoroethane	<0.300	20.0	10.2	51	18.9	95	51-131	60	20	ug/L	05.22.18 14:28	R5
1,3-Butadiene	<0.276	20.0	21.8	109	18.6	93	37-152	16	20	ug/L	05.22.18 14:28	
Cyclohexane	<0.115	20.0	19.6	98	18.9	95	64-138	4	20	ug/L	05.22.18 14:28	
Dicyclopentadiene	<0.0540	20.0	17.9	90	17.5	88	13-182	2	20	ug/L	05.22.18 14:28	
Methylcyclohexane	<0.117	20.0	21.6	108	21.1	106	70-130	2	20	ug/L	05.22.18 14:28	
n-Hexane	<0.0920	20.0	18.1	91	17.4	87	62-128	4	20	ug/L	05.22.18 14:28	

Surrogate	MS %Rec	MS Flag	MSD %Rec	MSD Flag	Limits	Units	Analysis Date
4-Bromofluorobenzene	96		91		74-124	%	05.22.18 14:28
Dibromofluoromethane	92		90		75-131	%	05.22.18 14:28
1,2-Dichloroethane-D4	92		90		63-144	%	05.22.18 14:28
Toluene-D8	94		93		80-117	%	05.22.18 14:28

MS/MSD Percent Recovery [D] = 100*(C-A) / B
Relative Percent Difference RPD = 200* | (C-E) / (C+E) |
LCS/LCSD Recovery [D] = 100 * (C) / [B]
Log Difference Log Diff. = Log(Sample Duplicate) - Log(Original Sample)

LCS = Laboratory Control Sample
A = Parent Result
C = MS/LCS Result
E = MSD/LCSD Result

MS = Matrix Spike
B = Spike Added
D = MSD/LCSD % Rec

QC Summary 585543

AMEC Foster Wheeler

Cave Creek Landfill - Maricopa

Analytical Method: **VOCs by SW 8260B** Prep Method: SW5030C

Seq Number: 3051314 Matrix: Ground Water Date Prep: 05.24.18

Parent Sample Id: 585892-009 MS Sample Id: 585892-009 S MSD Sample Id: 585892-009 SD

Parameter	Parent Result	Spike Amount	MS Result	MS %Rec	MSD Result	MSD %Rec	Limits	%RPD	RPD Limit	Units	Analysis Date	Flag
Acetone	20.9	40.0	58.4	94	63.0	105	7-174	8	20	ug/L	05.24.18 17:38	
m,p-Xylenes	<0.0900	40.0	43.7	109	42.6	107	70-130	3	20	ug/L	05.24.18 17:38	
o-Xylene	<0.0900	20.0	22.1	111	22.0	110	70-130	0	20	ug/L	05.24.18 17:38	

Surrogate	MS %Rec	MS Flag	MSD %Rec	MSD Flag	Limits	Units	Analysis Date
4-Bromofluorobenzene	103		105		74-124	%	05.24.18 17:38
Dibromofluoromethane	107		109		75-131	%	05.24.18 17:38
1,2-Dichloroethane-D4	108		110		63-144	%	05.24.18 17:38
Toluene-D8	104		108		80-117	%	05.24.18 17:38

MS/MSD Percent Recovery	[D] = 100*(C-A) / B	LCS = Laboratory Control Sample	MS = Matrix Spike
Relative Percent Difference	RPD = 200* | (C-E) / (C+E) |	A = Parent Result	B = Spike Added
LCS/LCSD Recovery	[D] = 100 * (C) / [B]	C = MS/LCS Result	D = MSD/LCSD % Rec
Log Difference	Log Diff. = Log(Sample Duplicate) - Log(Original Sample)	E = MSD/LCSD Result	

CHAIN OF CUSTODY

Page 1 Of 1

S85543

XENCO LABORATORIES

Setting the Standard since 1990

Stafford,Texas (281-240-4200)
Dallas Texas (214-902-0300)
San Antonio, Texas (210-509-3334)
Midland, Texas (432-704-5251)
Phoenix, Arizona (480-355-0900)
www.xenco.com

Xenco Quote #080717RK-AMECFW
Xenco Job #

Client / Reporting Information

Company Name / Branch: Maricopa County WR&R
Company Address: 2910 W Durango St Phoenix AZ 85009
Email: SAMANTHA.SARGENT@WOODPLC.COM, EMILY.LODOLCE@WOODPLC.COM
Phone No: 602.733.6030, 602.733.6081
Project Contact: Emily LoDolce - (602) 733-6081
Sampler's Name: Samantha Sargent

Project Information

Project Name/Number: Cave Creek Landfill 14-2017-2034.****.021
Project Location: Phoenix. AZ
Invoice To: attn: Kathryn Snyder, Maricopa County WR&R, 2910 W Durango St Phoenix, AZ 85009
PO Number:

Matrix Codes

W = Water
S = Soil/Sed/Solid
GW =Ground Water
DW = Drinking Water
P = Product
SW = Surface water
SL = Sludge
OW =Ocean/Sea Water
WI = Wipe
O = Oil
WW= Waste Water
A = Air

	No.	Field ID / Point of Collection	Sample Depth	Date	Time	Matrix	# of bottles	HCl	NaOH/Zn Acetate	HNO3	H2SO4	NaOH	NaHSO4	MEOH	NONE	8260B VOCs - three bottles	8270 SVOCs (Naphthalene only)	6020 Metals (See List)	300.0 General Chemistry (See List)	3000. Nitrate/Nitrite	SM2320B Alkalinity	SM2450C (TDS), SM2510B (Specific Conductivity), SM4500 (pH)				Field Comments
1	1	MW02-714-050718	714	5.7.18	948	W	4	x							X	X	X									
2	2	MW03-723-050818	723	5.8.18	1152	W	4	x							X	X	X									
	3	~~MW04-708~~ (EM)	708	—	—	W	4	x							X	X	X									UNABLE TO SAMPLE
3	4	MW05-704-050918	704	5.9.18	1315	W	4	x							X	X	X									
4	5	MW06-720-050818	720	5.8.18	1025	W	4	x							X	X	X									
5	6	MW07-718-050818	718	5.8.18	847	W	4	x							X	X	X									
6	7	MW08-741-050718	741	5.7.18	1050	W	4	x							X	X	X									
7	8	PW-734-051018	734	5.10.18	720	W	4	x							X	X	X									MS/MSD (VOC's)
8	9																									
	10																									

Turnaround Time (Business days)

- [ ] Same Day TAT
- [ ] 5 Day TAT
- [ ] Next Day EMERGENCY
- [ ] 7 Day TAT
- [ ] 2 Day EMERGENCY
- [x] Contract TAT
- [ ] 3 Day EMERGENCY

TAT Starts Day received by Lab, if received by 5:00 pm

Data Deliverable Information

- [ ] Level II Std QC
- [ ] Level IV (Full Data Pkg /raw data)
- [ ] Level III Std QC+ Forms
- [ ] TRRP Level IV
- [ ] Level 3 (CLP Forms)
- [ ] UST / RG -411
- [ ] TRRP Checklist

Notes:

FED-EX / UPS: Tracking #

SAMPLE CUSTODY MUST BE DOCUMENTED BELOW EACH TIME SAMPLES CHANGE POSSESSION, INCLUDING COURIER DELIVERY

Relinquished by	Date Time	Received By	Relinquished By	Date Time	Received By
1 Emily	5.10.18 1410	1	2		2
3		3	4		4
5		5			

Custody Seal # | Preserved where applicable | On Ice [X] | Cooler Temp. | Thermo. Corr. Factor

Notice: Notice: Signature of this document and relinquishment of samples constitutes a valid purchase order from client company to Xenco, its affiliates and subcontractors. It assigns standard terms and conditions of service. Xenco will be liable only for the cost of samples and shall not assume any responsibility for any losses or expenses incurred by the Client if such loses are due to circumstances beyond the control of Xenco. A minimum charge of $75 will be applied to each project. Xenco's liability will be limited to the cost of samples. Any samples received by Xenco but not analyzed will be invoiced at $5 per sample. These terms will be enforced unless previously negotiated under a fully executed client contract.

CHAIN OF CUSTODY

585543

XENCO LABORATORIES

Setting the Standard since 1990

Stafford,Texas (281-240-4200) | San Antonio, Texas (210-509-3334) | Phoenix, Arizona (480-355-0900)

Dallas Texas (214-902-0300) | Midland, Texas (432-704-5251)

www.xenco.com

Xenco Quote #080717RK-AMECFW | Xenco Job #

Client / Reporting Information

Company Name / Branch: Amec Foster Wheeler

Company Address: 4600 E Washington St. Suite 600 Phoenix, AZ 85034

Email: SAMANTHA.SARGENT@WOODPLC.COM, EMILY .LODOLCE@WOODPLC.COM

Phone No: 602.733.6030, 602.733.6081

Project Contact: Emily LoDolce - (602) 733-6081

Samplers's Name

Project Information

Project Name/Number: Cave Creek Landfill 14-2017-2034.****.021

Project Location: Phoenix. AZ

Invoice To: Amec Foster Wheeler - ATTN: Emily LoDolce, 4600 E Washington St. Suite 600, Phoenix, AZ 85034

PO Number: C014101574

Analytical Information

Matrix Codes

W = Water
S = Soil/Sed/Solid
GW =Ground Water
DW = Drinking Water
P = Product
SW = Surface water
SL = Sludge
OW =Ocean/Sea Water
WI = Wipe
O = Oil
WW= Waste Water
A = Air

	No.	Field ID / Point of Collection	Sample Depth	Date	Time	Matrix	# of bottles	HCl	NaOH/Zn Acetate	HNO3	H2SO4	NaOH	NaHSO4	MEOH	NONE	8260B VOCs	Field Comments
8	1	TSSV02-732- 050918	732	5.9.18	1136	W	3	x								X	
9	2	TSSV03-758- 050918	758	5.9.18	1003	W	3	x								X	
10	3	TSSV04-760- 050818	759	5.8.18	1331	W	3	x								X	
11	4	TSSV05-760- 050918	760	5.9.18	840	W	3	x								X	
12	5	TSSV06-729- 050718	760	5.7.18	808	W	3	x								X	
13	6	TSSV07-742- 050818	729	5.8.18	745	W	3	x								X	
14	7	EW01-712- 050718	742	5.7.18	910	W	3	x								X	
15	8	MW09-718- 050918	712	5.9.18	1055	W	3	x								X	
16	9	MW10-704- 050918	718	5.9.18	1239	W	3	x								X	
17	10	DUP01- 050718	–	5.7.18	1505	W	3	x								X	
18	11	DUP02- 050918	–	5.9.18	1435	W	3	x								X	

Turnaround Time (Business days)

- [ ] Same Day TAT
- [ ] 5 Day TAT
- [ ] Next Day EMERGENCY
- [ ] 7 Day TAT
- [ ] 2 Day EMERGENCY
- [x] Contract TAT
- [ ] 3 Day EMERGENCY

TAT Starts Day received by Lab, if received by 5:00 pm

Data Deliverable Information

- [ ] Level II Std QC
- [ ] Level IV (Full Data Pkg /raw data)
- [ ] Level III Std QC+ Forms
- [ ] TRRP Level IV
- [ ] Level 3 (CLP Forms)
- [ ] UST / RG -411
- [ ] TRRP Checklist

Notes:

FED-EX / UPS: Tracking #

SAMPLE CUSTODY MUST BE DOCUMENTED BELOW EACH TIME SAMPLES CHANGE POSSESSION, INCLUDING COURIER DELIVERY

Relinquished by Sampler:	Date Time:	Received By:	Relinquished By:	Date Time:	Received By:
1 E. Mills	5.10.18 1715	1	2		2
Relinquished by: 3	Date Time:	Received By: 3	Relinquished By: 4	Date Time:	Received By: 4
Relinquished by: 5	Date Time:	Received By: 5	Custody Seal #	Preserved where applicable [ ]	On Ice [x] Cooler Temp. 1.7 Thermo. Corr. Factor

Notice: Notice: Signature of this document and relinquishment of samples constitutes a valid purchase order from client company to Xenco, its affiliates and subcontractors. It assigns standard terms and conditions of service. Xenco will be liable only for the cost of samples and shall not assume any responsibility for any losses or expenses incurred by the Client if such loses are due to circumstances beyond the control of Xenco. A minimum charge of $75 will be applied to each project. Xenco's liability will be limited to the cost of samples. Any samples received by Xenco but not analyzed will be invoiced at $5 per sample. These terms will be enforced unless previously negotiated under a fully executed client contract.

CHAIN OF CUSTODY

585593

XENCO LABORATORIES

Setting the Standard since 1990

Stafford,Texas (281-240-4200) | San Antonio, Texas (210-509-3334) | Phoenix, Arizona (480-355-0900)

Dallas Texas (214-902-0300) | Midland, Texas (432-704-5251)

www.xenco.com

Xenco Quote #080717RK-AMECFW | Xenco Job #

Client / Reporting Information

Company Name / Branch: Amec Foster Wheeler

Company Address: 4600 E Washington St. Suite 600 Phoenix, AZ 85034

Email: SAMANTHA.SARGENT@WOODPLC.COM, EMILY .LODOLCE@WOODPLC.COM

Phone No: 602.733.6030, 602.733.6081

Project Contact: Emily LoDolce - (602) 733-6081

Samplers's Name

Project Information

Project Name/Number: Cave Creek Landfill 14-2017-2034.****.021

Project Location: Phoenix. AZ

Invoice To: Amec Foster Wheeler - ATTN: Emily LoDolce, 4600 E Washington St. Suite 600, Phoenix, AZ 85034

PO Number: C014101574

Analytical Information

Matrix Codes

W = Water
S = Soil/Sed/Solid
GW =Ground Water
DW = Drinking Water
P = Product
SW = Surface water
SL = Sludge
OW =Ocean/Sea Water
WI = Wipe
O = Oil
WW= Waste Water
A = Air

No.	Field ID / Point of Collection	Sample Depth	Date	Time	Matrix	# of bottles	HCl	NaOH/Zn Acetate	HNO3	H2SO4	NaOH	NaHSO4	MEOH	NONE	8260B VOCs										Field Comments
19 1	PDB Blank - 051018	—	5.10.18	938	W	3	X								X										
20 2	Trip Blank - 051018	—	5.10.18	950	W	3	X								X										
3																									
4																									
5																									
6																									
7																									
8																									
9																									

Turnaround Time (Business days)

- ☐ Same Day TAT
- ☐ 5 Day TAT
- ☐ Next Day EMERGENCY
- ☐ 7 Day TAT
- ☐ 2 Day EMERGENCY
- ☒ Contract TAT
- ☐ 3 Day EMERGENCY

TAT Starts Day received by Lab, if received by 5:00 pm

Data Deliverable Information

- ☐ Level II Std QC
- ☐ Level IV (Full Data Pkg /raw data)
- ☐ Level III Std QC+ Forms
- ☐ TRRP Level IV
- ☐ Level 3 (CLP Forms)
- ☐ UST / RG -411
- ☐ TRRP Checklist

Notes:

FED-EX / UPS: Tracking #

SAMPLE CUSTODY MUST BE DOCUMENTED BELOW EACH TIME SAMPLES CHANGE POSSESSION, INCLUDING COURIER DELIVERY

Relinquished by Sampler:	Date Time:	Received By:	Relinquished By:	Date Time:	Received By:
1	5.10.18 / 1710	1	2		2
Relinquished by: 3	Date Time:	Received By: 3	Relinquished By: 4	Date Time:	Received By: 4
Relinquished by: 5	Date Time:	Received By: 5	Custody Seal #	Preserved where applicable	On Ice / Cooler Temp. / Thermo. Corr. Factor

Notice: Notice: Signature of this document and relinquishment of samples constitutes a valid purchase order from client company to Xenco, its affiliates and subcontractors. It assigns standard terms and conditions of service. Xenco will be liable only for the cost of samples and shall not assume any responsibility for any losses or expenses incurred by the Client if such loses are due to circumstances beyond the control of Xenco. A minimum charge of $75 will be applied to each project. Xenco's liability will be limited to the cost of samples. Any samples received by Xenco but not analyzed will be invoiced at $5 per sample. These terms will be enforced unless previously negotiated under a fully executed client contract.

Sample Receipt Checklist

Client Name: AMEC

Date and Time Received: 5/10/18 1410

Work Order Number: 585543

Checked by: SH

Checklist completed by: [illegible]

Logged In by: SH Date: 5/10/18

Matrix: W Courier Name: Client TWA

Shipping container/cooler in good condition?	Yes ☑	No ☐	Not Present ☐
Custody seals intact on shipping container/cooler?	Yes ☐	No ☐	Not Present ☑
Custody seals intact on sample bottles?	Yes ☐	No ☐	Not Present ☑
Chain of custody signed when relinquished and received?	Yes ☑	No ☐	Not Present ☐
Chain of custody agrees with sample labels?	Yes ☑	No ☐	
Samples in proper container/bottle?	Yes ☑	No ☐	
Sample containers intact?	Yes ☑	No ☐	
Sufficient sample volume for indicated test?	Yes ☑	No ☐	
All samples received within holding time?	Yes ☑	No ☐	
All samples received same day of collection?	Yes ☐	No ☑	Temp: 1.7 Wet Ice Present ☑
Where was the temperature reading taken at?	Sample ☐	Temp Blank ☑	Other:
VOA Water – VOA vials have zero headspace?	Yes ☑	No ☐	N/A ☐
Water – Microbiological bottles have ≤ 2.5 cm headspace?	Yes ☐	No ☐	N/A ☑
Water – All sample pH's acceptable upon receipt?	Yes ☐	No ☐	N/A ☑ Checked by: NA

If No, list all samples and bottle types that are not acceptable in Additional Comments section. Also state any correction actions.

Dissolved Metals – Field Filtered?	Yes ☐	No ☐	N/A ☑

Additional Comments:

SRChecklist 2016.1

Analytical Report 589974

for

AMEC Foster Wheeler

Project Manager: Samantha Sargent

Cave Creek Landfill

1420172034.**.021**

03-JUL-18

Collected By: Client

2525 West Huntington Drive, Suite 102
Tempe, AZ 85282
Ph: (480) 355-0900

Phoenix (EPA Lab Code: AZ00901): Arizona (AZ0757)
Xenco-Houston (EPA Lab code: TX00122): Arizona (AZ0765)
Xenco-Dallas (EPA Lab code: TX01468): Arizona (AZ0809)

03-JUL-18

Project Manager: **Samantha Sargent**
AMEC Foster Wheeler
4600 E. Washington Suite 600
Phoenix, AZ 85034

Reference: TWA Report No(s): **589974**
Cave Creek Landfill
Project Address:

Samantha Sargent :

We are reporting to you the results of the analyses performed on the samples received under the project name referenced above and identified with the TWA Report Number(s) 589974. All results being reported under this Report Number apply to the samples analyzed and properly identified with a Laboratory ID number. Subcontracted analyses are identified in this report with either the ADHS certification number of the subcontract lab in the analyst ID field, or the complete subcontracted report attached to this report.

Unless otherwise noted in a Case Narrative, all data reported in this Analytical Report are in compliance with ADHS standards. The uncertainty of measurement associated with the results of analysis reported is available upon request. Should insufficient sample be provided to the laboratory to meet the method and ADHS Matrix Duplicate and Matrix Spike requirements, then the data will be analyzed, evaluated and reported using all other available quality control measures.

The validity and integrity of this report will remain intact as long as it is accompanied by this letter and reproduced in full, unless written approval is granted by TransWest Analytical. This report will be filed for at least 5 years in our archives after which time it will be destroyed without further notice, unless otherwise arranged with you. The samples received, and described as recorded in Report No. 589974 will be filed for 45 days, and after that time they will be properly disposed without further notice, unless otherwise arranged with you. We reserve the right to return to you any unused samples, extracts or solutions related to them if we consider so necessary (e.g., samples identified as hazardous waste, sample sizes exceeding analytical standard practices, controlled substances under regulated protocols, etc).

We thank you for selecting TransWest Analytical to serve your analytical needs. If you have any questions concerning this report, please feel free to contact us at any time.

Respectfully,

Skip Harden
Project Manager

Recipient of the Prestigious Small Business Administration Award of Excellence in 1994.
Certified and approved by numerous States and Agencies.
A Small Business and Minority Status Company that delivers SERVICE and QUALITY

Houston - Dallas - Midland - San Antonio - Phoenix - Oklahoma - Latin America

Sample receipt non conformances and comments:

None

Sample receipt non conformances and comments per sample:

None

Arizona Flags

All method blanks, laboratory spikes, and/or matrix spikes met quality control objectives for the parameters associated with this Work Order except as detailed below or on the Data Qualifier page of this report. Data Qualifiers used in this report are in accordance with ADHS Data Qualifiers, Revision 4.0 9/05/2012.
Data qualifiers (flags) contained within this analytical report have been issued to explain a quality control deficiency, and do not affect the quality (validity) of the data unless noted otherwise in the case narrative.

E4 Concentration estimated. Analyte was detected below laboratory minimum reporting limit (MRL).

E8 Analyte reported to MDL per project specification. Target analyte was not detected in sample.

R5 MS/MSD RPD exceeded the laboratory acceptance limit. Recovery met acceptance criteria.

S6 Surrogate recovery was below laboratory and method acceptance limits. Re-extraction and/or reanalysis confirms low recovery caused by matrix effect.

T4 Tentatively identified compound. Concentration is estimated and based on the closest internal standard.

Sample Cross Reference 589974

AMEC Foster Wheeler, Phoenix, AZ

Cave Creek Landfill

Sample Id	Matrix	Date Collected	Sample Depth	Lab Sample Id
PW-734-062118	W	06-21-18 11:10		589974-001
MW02-714-062118	W	06-21-18 12:30		589974-002
MW03-723-062118	W	06-21-18 09:50		589974-003
MW04-708-062118	W	06-21-18 07:30		589974-004
MW05-704-062118	W	06-21-18 12:00		589974-005
MW06-720-062118	W	06-21-18 09:05		589974-006
MW07-718-062118	W	06-21-18 08:10		589974-007
MW08-741-062118	W	06-21-18 10:40		589974-008
DUP01-062118	W	06-21-18 10:40		589974-009

Certificate of Analytical Results 589974

AMEC Foster Wheeler, Phoenix, AZ

Cave Creek Landfill

Sample Id: **PW-734-062118**
Lab Sample Id: 589974-001

Matrix: Water
Date Collected: 06.21.18 11.10

Date Received:06.21.18 13.45

Analytical Method: PAHs by 8270C SIM
Tech: RUO
Analyst: EKL
Seq Number: 3054640

Date Prep: 06.26.18 12.00

Prep Method: SW3510C
% Solids:

SUB: AZ0765

Parameter	Cas Number	Result	RL	Units	Analysis Date	Flag	Dil
Naphthalene	91-20-3	<0.00000451	0.000500	mg/L	06.27.18 17.52	E8	1

Surrogate	% Recovery	Units	Limits	Analysis Date	Flag
Nitrobenzene-d5	94	%	41-128	06.27.18 17.52	
2-Fluorobiphenyl	94	%	55-135	06.27.18 17.52	
Terphenyl-D14	111	%	54-131	06.27.18 17.52	

Final 1.000

Certificate of Analytical Results 589974

AMEC Foster Wheeler, Phoenix, AZ

Cave Creek Landfill

Sample Id: **MW02-714-062118**
Lab Sample Id: 589974-002

Matrix: Water
Date Collected: 06.21.18 12.30

Date Received:06.21.18 13.45

Analytical Method: PAHs by 8270C SIM
Tech: RUO
Analyst: EKL
Seq Number: 3054640

Date Prep: 06.26.18 12.03

Prep Method: SW3510C
% Solids:

SUB: AZ0765

Parameter	Cas Number	Result	RL	Units	Analysis Date	Flag	Dil
Naphthalene	91-20-3	**0.0000464**	0.000500	mg/L	06.27.18 18.11	E4	1

Surrogate	% Recovery	Units	Limits	Analysis Date	Flag
Nitrobenzene-d5	109	%	41-128	06.27.18 18.11	
2-Fluorobiphenyl	105	%	55-135	06.27.18 18.11	
Terphenyl-D14	118	%	54-131	06.27.18 18.11	

Final 1.000

Certificate of Analytical Results 589974

AMEC Foster Wheeler, Phoenix, AZ

Cave Creek Landfill

Sample Id: **MW03-723-062118**
Lab Sample Id: 589974-003

Matrix: Water
Date Collected: 06.21.18 09.50

Date Received:06.21.18 13.45

Analytical Method: PAHs by 8270C SIM
Tech: RUO
Analyst: EKL
Seq Number: 3054640

Date Prep: 06.26.18 12.06

Prep Method: SW3510C
% Solids:

SUB: AZ0765

Parameter	Cas Number	Result	RL	Units	Analysis Date	Flag	Dil
Naphthalene	91-20-3	**0.0000306**	0.000505	mg/L	06.27.18 18.29	E4	1.01

Surrogate	% Recovery	Units	Limits	Analysis Date	Flag
Nitrobenzene-d5	87	%	41-128	06.27.18 18.29	
2-Fluorobiphenyl	77	%	55-135	06.27.18 18.29	
Terphenyl-D14	95	%	54-131	06.27.18 18.29	

Final 1.000

Certificate of Analytical Results 589974

AMEC Foster Wheeler, Phoenix, AZ

Cave Creek Landfill

Sample Id: **MW04-708-062118**
Lab Sample Id: 589974-004

Matrix: Water
Date Collected: 06.21.18 07.30

Date Received:06.21.18 13.45

Analytical Method: VOCs by SW 8260B
Tech: MNI
Analyst: MNI
Seq Number: 3055253

Date Prep: 06.29.18 11.25

Prep Method: SW5030C
% Solids:

Parameter	Cas Number	Result	RL	Units	Analysis Date	Flag	Dil
1,1,1,2-Tetrachloroethane	630-20-6	<0.500	0.500	ug/L	06.30.18 02.41		1
1,1,1-Trichloroethane	71-55-6	<0.500	0.500	ug/L	06.30.18 02.41		1
1,1,2,2-Tetrachloroethane	79-34-5	<0.500	0.500	ug/L	06.30.18 02.41		1
1,1,2-Trichloroethane	79-00-5	<0.500	0.500	ug/L	06.30.18 02.41		1
1,1-Dichloroethane	75-34-3	<0.500	0.500	ug/L	06.30.18 02.41		1
1,1-Dichloroethene	75-35-4	<0.500	0.500	ug/L	06.30.18 02.41		1
1,1-Dichloropropene	563-58-6	<1.00	1.00	ug/L	06.30.18 02.41		1
1,2,3-Trichlorobenzene	87-61-6	<5.00	5.00	ug/L	06.30.18 02.41		1
1,2,3-Trichloropropane	96-18-4	<1.00	1.00	ug/L	06.30.18 02.41		1
1,2,4-Trichlorobenzene	120-82-1	<5.00	5.00	ug/L	06.30.18 02.41		1
1,2,4-Trimethylbenzene	95-63-6	<2.00	2.00	ug/L	06.30.18 02.41		1
1,2-Dibromo-3-Chloropropane	96-12-8	<2.00	2.00	ug/L	06.30.18 02.41		1
1,2-Dibromoethane	106-93-4	<0.500	0.500	ug/L	06.30.18 02.41		1
1,2-Dichlorobenzene	95-50-1	<1.50	1.50	ug/L	06.30.18 02.41		1
1,2-Dichloroethane	107-06-2	<0.500	0.500	ug/L	06.30.18 02.41		1
1,2-Dichloropropane	78-87-5	<0.500	0.500	ug/L	06.30.18 02.41		1
1,3,5-Trimethylbenzene	108-67-8	<1.50	1.50	ug/L	06.30.18 02.41		1
1,3-Dichlorobenzene	541-73-1	<1.50	1.50	ug/L	06.30.18 02.41		1
1,3-Dichloropropane	142-28-9	<1.00	1.00	ug/L	06.30.18 02.41		1
1,4-Dichlorobenzene	106-46-7	<1.50	1.50	ug/L	06.30.18 02.41		1
2,2-Dichloropropane	594-20-7	<0.500	0.500	ug/L	06.30.18 02.41		1
2-Butanone	78-93-3	<5.00	5.00	ug/L	06.30.18 02.41		1
2-Chlorotoluene	95-49-8	<1.50	1.50	ug/L	06.30.18 02.41		1
2-Hexanone	591-78-6	<5.00	5.00	ug/L	06.30.18 02.41		1
4-Chlorotoluene	106-43-4	<2.00	2.00	ug/L	06.30.18 02.41		1
4-Methyl-2-Pentanone	108-10-1	<5.00	5.00	ug/L	06.30.18 02.41		1
Acetone	67-64-1	**55.4**	20.0	ug/L	06.30.18 02.41		1
Benzene	71-43-2	<0.500	0.500	ug/L	06.30.18 02.41		1
Bromobenzene	108-86-1	<1.50	1.50	ug/L	06.30.18 02.41		1
Bromochloromethane	74-97-5	<0.500	0.500	ug/L	06.30.18 02.41		1
Bromodichloromethane	75-27-4	<0.500	0.500	ug/L	06.30.18 02.41		1
Bromoform	75-25-2	<1.00	1.00	ug/L	06.30.18 02.41		1
Bromomethane	74-83-9	<5.00	5.00	ug/L	06.30.18 02.41		1
Carbon Disulfide	75-15-0	<0.500	0.500	ug/L	06.30.18 02.41		1
Carbon Tetrachloride	56-23-5	<0.500	0.500	ug/L	06.30.18 02.41		1
Chlorobenzene	108-90-7	<0.500	0.500	ug/L	06.30.18 02.41		1
Chloroethane	75-00-3	<4.00	4.00	ug/L	06.30.18 02.41		1
Chloroform	67-66-3	<0.500	0.500	ug/L	06.30.18 02.41		1

Final 1.000

Certificate of Analytical Results 589974

AMEC Foster Wheeler, Phoenix, AZ

Cave Creek Landfill

Sample Id: **MW04-708-062118** Matrix: Water Date Received:06.21.18 13.45
Lab Sample Id: 589974-004 Date Collected: 06.21.18 07.30

Analytical Method: VOCs by SW 8260B Prep Method: SW5030C
Tech: MNI % Solids:
Analyst: MNI Date Prep: 06.29.18 11.25
Seq Number: 3055253

Parameter	Cas Number	Result	RL	Units	Analysis Date	Flag	Dil
Chloromethane	74-87-3	<5.00	5.00	ug/L	06.30.18 02.41		1
cis-1,2-Dichloroethene	156-59-2	<0.500	0.500	ug/L	06.30.18 02.41		1
cis-1,3-Dichloropropene	10061-01-5	<1.00	1.00	ug/L	06.30.18 02.41		1
Dibromochloromethane	124-48-1	<0.500	0.500	ug/L	06.30.18 02.41		1
Dibromomethane	74-95-3	<0.500	0.500	ug/L	06.30.18 02.41		1
Dichlorodifluoromethane	75-71-8	<2.00	2.00	ug/L	06.30.18 02.41		1
Ethylbenzene	100-41-4	<2.00	2.00	ug/L	06.30.18 02.41		1
Hexachlorobutadiene	87-68-3	<5.00	5.00	ug/L	06.30.18 02.41		1
Iodomethane (Methyl Iodide)	74-88-4	<2.00	2.00	ug/L	06.30.18 02.41		1
isopropylbenzene	98-82-8	<2.50	2.50	ug/L	06.30.18 02.41		1
m,p-Xylenes	179601-23-1	<2.00	2.00	ug/L	06.30.18 02.41		1
Methylene Chloride	75-09-2	<3.00	3.00	ug/L	06.30.18 02.41		1
MTBE	1634-04-4	<2.00	2.00	ug/L	06.30.18 02.41		1
Naphthalene	91-20-3	<5.00	5.00	ug/L	06.30.18 02.41		1
n-Butylbenzene	104-51-8	<2.50	2.50	ug/L	06.30.18 02.41		1
n-Propylbenzene	103-65-1	<2.00	2.00	ug/L	06.30.18 02.41		1
o-Xylene	95-47-6	<1.00	1.00	ug/L	06.30.18 02.41		1
p-Cymene (p-Isopropyltoluene)	99-87-6	<1.50	1.50	ug/L	06.30.18 02.41		1
Sec-Butylbenzene	135-98-8	<1.50	1.50	ug/L	06.30.18 02.41		1
Styrene	100-42-5	<1.00	1.00	ug/L	06.30.18 02.41		1
tert-Butylbenzene	98-06-6	<2.50	2.50	ug/L	06.30.18 02.41		1
Tetrachloroethylene	127-18-4	**0.880**	0.500	ug/L	06.30.18 02.41		1
Toluene	108-88-3	<2.00	2.00	ug/L	06.30.18 02.41		1
Total Trihalomethane		<0.500	0.500	ug/L	06.30.18 02.41		1
Total Xylenes	1330-20-7	<1.00	1.00	ug/L	06.30.18 02.41		1
trans-1,2-dichloroethene	156-60-5	<0.500	0.500	ug/L	06.30.18 02.41		1
Trichloroethene	79-01-6	**4.21**	0.500	ug/L	06.30.18 02.41		1
Trichlorofluoromethane	75-69-4	<2.00	2.00	ug/L	06.30.18 02.41		1
Vinyl Acetate	108-05-4	<5.00	5.00	ug/L	06.30.18 02.41		1
Vinyl Chloride	75-01-4	<0.500	0.500	ug/L	06.30.18 02.41		1
trans-1,3-dichloropropene	10061-02-6	<0.500	0.500	ug/L	06.30.18 02.41		1
1,1,2-Trichloro-1,2,2-Trifluoroethane	76-13-1	<5.00	5.00	ug/L	06.30.18 02.41		1
1,3-Butadiene	106-99-0	<5.00	5.00	ug/L	06.30.18 02.41		1
Cyclohexane	110-82-7	<5.00	5.00	ug/L	06.30.18 02.41		1
Dicyclopentadiene	77-73-6	<5.00	5.00	ug/L	06.30.18 02.41		1
Methylcyclohexane	108-87-2	<5.00	5.00	ug/L	06.30.18 02.41		1
n-Hexane	110-54-3	<5.00	5.00	ug/L	06.30.18 02.41		1
4-Ethyltoluene	622-96-8	Not Present		ug/L	06.30.18 02.41	T4	1

Certificate of Analytical Results 589974

AMEC Foster Wheeler, Phoenix, AZ

Cave Creek Landfill

Sample Id: **MW04-708-062118** Matrix: Water Date Received:06.21.18 13.45
Lab Sample Id: 589974-004 Date Collected: 06.21.18 07.30

Analytical Method: VOCs by SW 8260B Prep Method: SW5030C
Tech: MNI % Solids:
Analyst: MNI Date Prep: 06.29.18 11.25
Seq Number: 3055253

Parameter	Cas Number	Result	RL	Units	Analysis Date	Flag	Dil
Propene	115-07-1	Not Present		ug/L	06.30.18 02.41	T4	1

Surrogate	% Recovery	Units	Limits	Analysis Date	Flag
4-Bromofluorobenzene	108	%	74-124	06.30.18 02.41	
Dibromofluoromethane	107	%	75-131	06.30.18 02.41	
1,2-Dichloroethane-D4	110	%	63-144	06.30.18 02.41	
Toluene-D8	108	%	70-130	06.30.18 02.41	

Analytical Method: PAHs by 8270C SIM Prep Method: SW3510C
Tech: RUO % Solids:
Analyst: EKL Date Prep: 06.26.18 12.09
Seq Number: 3054640 SUB: AZ0765

Parameter	Cas Number	Result	RL	Units	Analysis Date	Flag	Dil
Naphthalene	91-20-3	<0.00000451	0.000500	mg/L	06.27.18 18.48	E8	1

Surrogate	% Recovery	Units	Limits	Analysis Date	Flag
Nitrobenzene-d5	51	%	41-128	06.27.18 18.48	
2-Fluorobiphenyl	50	%	55-135	06.27.18 18.48	S6
Terphenyl-D14	101	%	54-131	06.27.18 18.48	

Certificate of Analytical Results 589974

AMEC Foster Wheeler, Phoenix, AZ

Cave Creek Landfill

Sample Id: **MW05-704-062118**
Lab Sample Id: 589974-005

Matrix: Water
Date Collected: 06.21.18 12.00

Date Received:06.21.18 13.45

Analytical Method: PAHs by 8270C SIM
Tech: RUO
Analyst: EKL
Seq Number: 3054640

Date Prep: 06.26.18 12.12

Prep Method: SW3510C
% Solids:

SUB: AZ0765

Parameter	Cas Number	Result	RL	Units	Analysis Date	Flag	Dil
Naphthalene	91-20-3	<0.00000451	0.000500	mg/L	06.27.18 19.07	E8	1

Surrogate	% Recovery	Units	Limits	Analysis Date	Flag
Nitrobenzene-d5	67	%	41-128	06.27.18 19.07	
2-Fluorobiphenyl	55	%	55-135	06.27.18 19.07	
Terphenyl-D14	63	%	54-131	06.27.18 19.07	

Certificate of Analytical Results 589974

AMEC Foster Wheeler, Phoenix, AZ

Cave Creek Landfill

Sample Id: **MW06-720-062118**
Lab Sample Id: 589974-006

Matrix: Water
Date Collected: 06.21.18 09.05

Date Received:06.21.18 13.45

Analytical Method: PAHs by 8270C SIM
Tech: RUO
Analyst: EKL
Seq Number: 3054640

Date Prep: 06.26.18 12.15

Prep Method: SW3510C
% Solids:

SUB: AZ0765

Parameter	Cas Number	Result	RL	Units	Analysis Date	Flag	Dil
Naphthalene	91-20-3	<0.00000475	0.000526	mg/L	06.27.18 19.25	E8	1.05

Surrogate	% Recovery	Units	Limits	Analysis Date	Flag
Nitrobenzene-d5	67	%	41-128	06.27.18 19.25	
2-Fluorobiphenyl	62	%	55-135	06.27.18 19.25	
Terphenyl-D14	87	%	54-131	06.27.18 19.25	

Certificate of Analytical Results 589974

AMEC Foster Wheeler, Phoenix, AZ

Cave Creek Landfill

Sample Id: **MW07-718-062118**
Lab Sample Id: 589974-007

Matrix: Water
Date Collected: 06.21.18 08.10

Date Received:06.21.18 13.45

Analytical Method: PAHs by 8270C SIM
Tech: RUO
Analyst: EKL
Seq Number: 3054640

Date Prep: 06.26.18 12.18

Prep Method: SW3510C
% Solids:

SUB: AZ0765

Parameter	Cas Number	Result	RL	Units	Analysis Date	Flag	Dil
Naphthalene	91-20-3	**0.0000282**	0.000500	mg/L	06.27.18 19.44	E4	1

Surrogate	% Recovery	Units	Limits	Analysis Date	Flag
Nitrobenzene-d5	61	%	41-128	06.27.18 19.44	
2-Fluorobiphenyl	57	%	55-135	06.27.18 19.44	
Terphenyl-D14	65	%	54-131	06.27.18 19.44	

Certificate of Analytical Results 589974

AMEC Foster Wheeler, Phoenix, AZ

Cave Creek Landfill

Sample Id: **MW08-741-062118**
Lab Sample Id: 589974-008

Matrix: Water
Date Collected: 06.21.18 10.40

Date Received:06.21.18 13.45

Analytical Method: PAHs by 8270C SIM
Tech: RUO
Analyst: EKL
Seq Number: 3054640

Date Prep: 06.26.18 12.21

Prep Method: SW3510C
% Solids:

SUB: AZ0765

Parameter	Cas Number	Result	RL	Units	Analysis Date	Flag	Dil
Naphthalene	91-20-3	**0.0000272**	0.000521	mg/L	06.27.18 20.03	E4	1.04

Surrogate	% Recovery	Units	Limits	Analysis Date	Flag
Nitrobenzene-d5	84	%	41-128	06.27.18 20.03	
2-Fluorobiphenyl	85	%	55-135	06.27.18 20.03	
Terphenyl-D14	102	%	54-131	06.27.18 20.03	

Certificate of Analytical Results 589974

AMEC Foster Wheeler, Phoenix, AZ

Cave Creek Landfill

Sample Id: **DUP01-062118**
Lab Sample Id: 589974-009

Matrix: Water
Date Collected: 06.21.18 10.40

Date Received:06.21.18 13.45

Analytical Method: PAHs by 8270C SIM
Tech: RUO
Analyst: EKL
Seq Number: 3054640

Date Prep: 06.26.18 12.24

Prep Method: SW3510C
% Solids:

SUB: AZ0765

Parameter	Cas Number	Result	RL	Units	Analysis Date	Flag	Dil
Naphthalene	91-20-3	<0.00000752	0.000833	mg/L	06.27.18 20.21	E8	1.67

Surrogate	% Recovery	Units	Limits	Analysis Date	Flag
Nitrobenzene-d5	52	%	41-128	06.27.18 20.21	
2-Fluorobiphenyl	48	%	55-135	06.27.18 20.21	S6
Terphenyl-D14	80	%	54-131	06.27.18 20.21	

QC Summary 589974

AMEC Foster Wheeler

Cave Creek Landfill

Analytical Method: VOCs by SW 8260B Prep Method: SW5030C

Seq Number: 3055253 Matrix: Water Date Prep: 06.29.18

MB Sample Id: 7657650-1-BLK LCS Sample Id: 7657650-1-BKS LCSD Sample Id: 7657650-1-BSD

Parameter	MB Result	Spike Amount	LCS Result	LCS %Rec	LCSD Result	LCSD %Rec	Limits	%RPD	RPD Limit	Units	Analysis Date	Flag
1,1,1,2-Tetrachloroethane	<0.500	20.0	19.8	99	18.5	93	70-130	7	20	ug/L	06.29.18 16:26	
1,1,1-Trichloroethane	<0.500	20.0	19.2	96	18.7	94	70-130	3	20	ug/L	06.29.18 16:26	
1,1,2,2-Tetrachloroethane	<0.500	20.0	19.1	96	18.2	91	70-130	5	20	ug/L	06.29.18 16:26	
1,1,2-Trichloroethane	<0.500	20.0	20.2	101	19.6	98	70-130	3	20	ug/L	06.29.18 16:26	
1,1-Dichloroethane	<0.500	20.0	17.6	88	17.0	85	70-130	3	20	ug/L	06.29.18 16:26	
1,1-Dichloroethene	<0.500	20.0	18.4	92	17.5	88	70-130	5	21	ug/L	06.29.18 16:26	
1,1-Dichloropropene	<1.00	20.0	21.1	106	20.6	103	70-130	2	20	ug/L	06.29.18 16:26	
1,2,3-Trichlorobenzene	<5.00	20.0	21.8	109	21.1	106	70-130	3	27	ug/L	06.29.18 16:26	
1,2,3-Trichloropropane	<1.00	20.0	17.7	89	17.3	87	70-130	2	20	ug/L	06.29.18 16:26	
1,2,4-Trichlorobenzene	<5.00	20.0	22.6	113	21.6	108	70-130	5	20	ug/L	06.29.18 16:26	
1,2,4-Trimethylbenzene	<2.00	20.0	22.1	111	21.8	109	70-130	1	20	ug/L	06.29.18 16:26	
1,2-Dibromo-3-Chloropropane	<2.00	20.0	17.1	86	16.6	83	70-130	3	21	ug/L	06.29.18 16:26	
1,2-Dibromoethane	<0.500	20.0	18.3	92	17.5	88	70-130	4	20	ug/L	06.29.18 16:26	
1,2-Dichlorobenzene	<1.50	20.0	21.9	110	21.6	108	70-130	1	20	ug/L	06.29.18 16:26	
1,2-Dichloroethane	<0.500	20.0	19.6	98	18.8	94	70-130	4	20	ug/L	06.29.18 16:26	
1,2-Dichloropropane	<0.500	20.0	19.8	99	19.3	97	70-130	3	20	ug/L	06.29.18 16:26	
1,3,5-Trimethylbenzene	<1.50	20.0	21.3	107	21.6	108	70-130	1	20	ug/L	06.29.18 16:26	
1,3-Dichlorobenzene	<1.50	20.0	22.0	110	21.6	108	70-130	2	20	ug/L	06.29.18 16:26	
1,3-Dichloropropane	<1.00	20.0	20.7	104	20.2	101	70-130	2	20	ug/L	06.29.18 16:26	
1,4-Dichlorobenzene	<1.50	20.0	22.5	113	21.8	109	70-130	3	20	ug/L	06.29.18 16:26	
2,2-Dichloropropane	<0.500	20.0	18.6	93	17.4	87	70-130	7	24	ug/L	06.29.18 16:26	
2-Butanone	<5.00	40.0	30.0	75	28.7	72	51-116	4	27	ug/L	06.29.18 16:26	
2-Chlorotoluene	<1.50	20.0	21.0	105	20.7	104	70-130	1	20	ug/L	06.29.18 16:26	
2-Hexanone	<5.00	40.0	28.7	72	27.3	68	59-101	5	20	ug/L	06.29.18 16:26	
4-Chlorotoluene	<2.00	20.0	21.4	107	21.3	107	70-130	0	28	ug/L	06.29.18 16:26	
4-Methyl-2-Pentanone	<5.00	40.0	31.8	80	29.2	73	57-106	9	21	ug/L	06.29.18 16:26	
Acetone	<20.0	40.0	27.6	69	25.5	64	47-128	8	28	ug/L	06.29.18 16:26	
Benzene	<0.500	20.0	22.1	111	20.9	105	70-130	6	20	ug/L	06.29.18 16:26	
Bromobenzene	<1.50	20.0	22.8	114	21.5	108	70-130	6	20	ug/L	06.29.18 16:26	
Bromochloromethane	<0.500	20.0	20.6	103	19.3	97	70-130	7	24	ug/L	06.29.18 16:26	
Bromodichloromethane	<0.500	20.0	20.9	105	19.5	98	70-130	7	20	ug/L	06.29.18 16:26	
Bromoform	<1.00	20.0	16.1	81	16.1	81	66-132	0	20	ug/L	06.29.18 16:26	
Bromomethane	<5.00	20.0	22.6	113	23.3	117	63-130	3	25	ug/L	06.29.18 16:26	
Carbon Disulfide	<0.500	20.0	18.2	91	17.3	87	70-130	5	22	ug/L	06.29.18 16:26	
Carbon Tetrachloride	<0.500	20.0	19.6	98	19.1	96	70-130	3	21	ug/L	06.29.18 16:26	
Chlorobenzene	<0.500	20.0	21.8	109	21.2	106	70-130	3	20	ug/L	06.29.18 16:26	
Chloroethane	<4.00	20.0	21.1	106	19.2	96	70-140	9	24	ug/L	06.29.18 16:26	
Chloroform	<0.500	20.0	19.3	97	18.8	94	70-130	3	24	ug/L	06.29.18 16:26	
Chloromethane	<5.00	20.0	17.6	88	16.5	83	25-130	6	26	ug/L	06.29.18 16:26	
cis-1,2-Dichloroethene	<0.500	20.0	19.5	98	19.1	96	70-130	2	24	ug/L	06.29.18 16:26	
cis-1,3-Dichloropropene	<1.00	20.0	21.6	108	20.9	105	70-130	3	20	ug/L	06.29.18 16:26	
Dibromochloromethane	<0.500	20.0	18.3	92	17.6	88	70-130	4	20	ug/L	06.29.18 16:26	
Dibromomethane	<0.500	20.0	20.7	104	20.1	101	70-130	3	23	ug/L	06.29.18 16:26	
Dichlorodifluoromethane	<2.00	20.0	20.0	100	18.6	93	25-136	7	27	ug/L	06.29.18 16:26	
Ethylbenzene	<2.00	20.0	21.7	109	20.5	103	70-130	6	20	ug/L	06.29.18 16:26	
Hexachlorobutadiene	<5.00	20.0	22.0	110	21.1	106	63-139	4	22	ug/L	06.29.18 16:26	
Iodomethane (Methyl Iodide)	<2.00	20.0	20.4	102	19.7	99	70-130	3	22	ug/L	06.29.18 16:26	
isopropylbenzene	<2.50	20.0	22.3	112	20.9	105	70-130	6	20	ug/L	06.29.18 16:26	
m,p-Xylenes	<2.00	40.0	43.8	110	41.5	104	70-130	5	20	ug/L	06.29.18 16:26	

MS/MSD Percent Recovery [D] = 100*(C-A) / B
Relative Percent Difference RPD = 200* | (C-E) / (C+E) |
LCS/LCSD Recovery [D] = 100 * (C) / [B]
Log Difference Log Diff. = Log(Sample Duplicate) - Log(Original Sample)

LCS = Laboratory Control Sample
A = Parent Result
C = MS/LCS Result
E = MSD/LCSD Result

MS = Matrix Spike
B = Spike Added
D = MSD/LCSD % Rec

QC Summary 589974

AMEC Foster Wheeler

Cave Creek Landfill

Analytical Method: **VOCs by SW 8260B** Prep Method: SW5030C

Seq Number: 3055253 Matrix: Water Date Prep: 06.29.18

MB Sample Id: 7657650-1-BLK LCS Sample Id: 7657650-1-BKS LCSD Sample Id: 7657650-1-BSD

Parameter	MB Result	Spike Amount	LCS Result	LCS %Rec	LCSD Result	LCSD %Rec	Limits	%RPD	RPD Limit	Units	Analysis Date	Flag
Methylene Chloride	<3.00	20.0	16.8	84	16.2	81	70-130	4	20	ug/L	06.29.18 16:26	
MTBE	<2.00	20.0	18.4	92	17.5	88	70-130	5	21	ug/L	06.29.18 16:26	
Naphthalene	<5.00	20.0	18.4	92	17.5	88	70-130	5	27	ug/L	06.29.18 16:26	
n-Butylbenzene	<2.50	20.0	20.9	105	20.4	102	70-130	2	20	ug/L	06.29.18 16:26	
n-Propylbenzene	<2.00	20.0	21.4	107	21.0	105	70-130	2	20	ug/L	06.29.18 16:26	
o-Xylene	<1.00	20.0	21.6	108	20.4	102	70-130	6	20	ug/L	06.29.18 16:26	
p-Cymene (p-Isopropyltoluene)	<1.50	20.0	24.3	122	23.6	118	70-130	3	20	ug/L	06.29.18 16:26	
Sec-Butylbenzene	<1.50	20.0	21.6	108	20.6	103	70-130	5	20	ug/L	06.29.18 16:26	
Styrene	<1.00	20.0	22.3	112	21.0	105	70-130	6	20	ug/L	06.29.18 16:26	
tert-Butylbenzene	<2.50	20.0	21.9	110	21.0	105	70-130	4	20	ug/L	06.29.18 16:26	
Tetrachloroethylene	<0.500	20.0	23.6	118	22.5	113	70-130	5	20	ug/L	06.29.18 16:26	
Toluene	<2.00	20.0	21.2	106	20.4	102	70-130	4	20	ug/L	06.29.18 16:26	
trans-1,2-dichloroethene	<0.500	20.0	18.1	91	17.8	89	70-130	2	21	ug/L	06.29.18 16:26	
Trichloroethene	<0.500	20.0	21.7	109	20.6	103	70-130	5	20	ug/L	06.29.18 16:26	
Trichlorofluoromethane	<2.00	20.0	24.7	124	22.9	115	70-130	8	22	ug/L	06.29.18 16:26	
Vinyl Acetate	<5.00	20.0	16.3	82	16.0	80	46-172	2	22	ug/L	06.29.18 16:26	
Vinyl Chloride	<0.500	20.0	19.2	96	18.3	92	41-132	5	25	ug/L	06.29.18 16:26	
trans-1,3-dichloropropene	<0.500	20.0	17.1	86	17.0	85	70-130	1	20	ug/L	06.29.18 16:26	
1,1,2-Trichloro-1,2,2-Trifluoroethane	<5.00	20.0	24.3	122	23.3	117	64-125	4	22	ug/L	06.29.18 16:26	
1,3-Butadiene	<5.00	20.0	14.5	73	13.6	68	58-134	6	20	ug/L	06.29.18 16:26	
Cyclohexane	<5.00	20.0	19.7	99	18.6	93	70-130	6	21	ug/L	06.29.18 16:26	
Dicyclopentadiene	<5.00	20.0	20.3	102	19.8	99	70-130	2	20	ug/L	06.29.18 16:26	
Methylcyclohexane	<5.00	20.0	22.3	112	20.8	104	70-130	7	20	ug/L	06.29.18 16:26	
n-Hexane	<5.00	20.0	19.2	96	18.5	93	67-130	4	20	ug/L	06.29.18 16:26	

Surrogate	MB %Rec	MB Flag	LCS %Rec	LCS Flag	LCSD %Rec	LCSD Flag	Limits	Units	Analysis Date
4-Bromofluorobenzene	117		105		87		74-124	%	06.29.18 16:26
Dibromofluoromethane	117		105		87		75-131	%	06.29.18 16:26
1,2-Dichloroethane-D4	119		103		84		63-144	%	06.29.18 16:26
Toluene-D8	119		112		93		70-130	%	06.29.18 16:26

MS/MSD Percent Recovery	[D] = 100*(C-A) / B	LCS = Laboratory Control Sample	MS = Matrix Spike
Relative Percent Difference	RPD = 200* | (C-E) / (C+E) |	A = Parent Result	B = Spike Added
LCS/LCSD Recovery	[D] = 100 * (C) / [B]	C = MS/LCS Result	D = MSD/LCSD % Rec
Log Difference	Log Diff. = Log(Sample Duplicate) - Log(Original Sample)	E = MSD/LCSD Result	

QC Summary 589974

AMEC Foster Wheeler

Cave Creek Landfill

Analytical Method: **VOCs by SW 8260B** Prep Method: SW5030C

Seq Number: 3055253 Matrix: Waste Water Date Prep: 06.29.18

Parent Sample Id: 589977-001 MS Sample Id: 589977-001 S MSD Sample Id: 589977-001 SD

Parameter	Parent Result	Spike Amount	MS Result	MS %Rec	MSD Result	MSD %Rec	Limits	%RPD	RPD Limit	Units	Analysis Date	Flag
1,1,1,2-Tetrachloroethane	<0.500	20.0	18.2	91	20.8	104	70-130	13	20	ug/L	06.29.18 17:18	
1,1,1-Trichloroethane	<0.500	20.0	18.0	90	19.9	100	70-130	10	20	ug/L	06.29.18 17:18	
1,1,2,2-Tetrachloroethane	<0.500	20.0	17.3	87	21.8	109	70-130	23	20	ug/L	06.29.18 17:18	R5
1,1,2-Trichloroethane	<0.500	20.0	18.8	94	22.6	113	70-130	18	20	ug/L	06.29.18 17:18	
1,1-Dichloroethane	<0.500	20.0	16.4	82	18.3	92	70-130	11	20	ug/L	06.29.18 17:18	
1,1-Dichloroethene	<0.500	20.0	17.1	86	18.3	92	63-144	7	20	ug/L	06.29.18 17:18	
1,1-Dichloropropene	<1.00	20.0	19.7	99	21.4	107	70-130	8	20	ug/L	06.29.18 17:18	
1,2,3-Trichlorobenzene	<5.00	20.0	21.3	107	23.3	117	70-130	9	24	ug/L	06.29.18 17:18	
1,2,3-Trichloropropane	<1.00	20.0	17.0	85	20.8	104	70-130	20	20	ug/L	06.29.18 17:18	
1,2,4-Trichlorobenzene	<5.00	20.0	21.0	105	23.5	118	70-130	11	20	ug/L	06.29.18 17:18	
1,2,4-Trimethylbenzene	<2.00	20.0	21.2	106	22.9	115	70-130	8	22	ug/L	06.29.18 17:18	
1,2-Dibromo-3-Chloropropane	<2.00	20.0	15.1	76	21.0	105	70-130	33	22	ug/L	06.29.18 17:18	R5
1,2-Dibromoethane	<0.500	20.0	17.1	86	20.5	103	70-130	18	20	ug/L	06.29.18 17:18	
1,2-Dichlorobenzene	<1.50	20.0	21.1	106	22.8	114	70-130	8	20	ug/L	06.29.18 17:18	
1,2-Dichloroethane	<0.500	20.0	17.7	89	21.4	107	70-130	19	20	ug/L	06.29.18 17:18	
1,2-Dichloropropane	<0.500	20.0	18.5	93	21.1	106	70-130	13	20	ug/L	06.29.18 17:18	
1,3,5-Trimethylbenzene	<1.50	20.0	20.5	103	21.5	108	70-130	5	20	ug/L	06.29.18 17:18	
1,3-Dichlorobenzene	<1.50	20.0	21.1	106	22.8	114	70-130	8	20	ug/L	06.29.18 17:18	
1,3-Dichloropropane	<1.00	20.0	19.9	100	23.4	117	70-130	16	20	ug/L	06.29.18 17:18	
1,4-Dichlorobenzene	<1.50	20.0	21.4	107	23.0	115	70-130	7	20	ug/L	06.29.18 17:18	
2,2-Dichloropropane	<0.500	20.0	17.5	88	18.7	94	70-130	7	20	ug/L	06.29.18 17:18	
2-Butanone	<5.00	40.0	27.8	70	35.5	89	40-133	24	22	ug/L	06.29.18 17:18	R5
2-Chlorotoluene	<1.50	20.0	19.8	99	21.6	108	70-130	9	20	ug/L	06.29.18 17:18	
2-Hexanone	<5.00	40.0	27.1	68	35.9	90	61-106	28	33	ug/L	06.29.18 17:18	
4-Chlorotoluene	<2.00	20.0	20.4	102	21.8	109	70-130	7	20	ug/L	06.29.18 17:18	
4-Methyl-2-Pentanone	<5.00	40.0	29.0	73	40.3	101	70-130	33	20	ug/L	06.29.18 17:18	R5
Acetone	<20.0	40.0	30.5	76	41.6	104	7-174	31	20	ug/L	06.29.18 17:18	R5
Benzene	<0.500	20.0	20.8	104	23.0	115	70-130	10	20	ug/L	06.29.18 17:18	
Bromobenzene	<1.50	20.0	20.7	104	23.9	120	70-130	14	20	ug/L	06.29.18 17:18	
Bromochloromethane	<0.500	20.0	18.1	91	22.1	111	70-130	20	22	ug/L	06.29.18 17:18	
Bromodichloromethane	<0.500	20.0	18.9	95	22.1	111	70-130	16	20	ug/L	06.29.18 17:18	
Bromoform	<1.00	20.0	16.0	80	19.2	96	70-130	18	20	ug/L	06.29.18 17:18	
Bromomethane	<5.00	20.0	23.5	118	22.4	112	43-147	5	22	ug/L	06.29.18 17:18	
Carbon Disulfide	<0.500	20.0	17.1	86	18.3	92	50-137	7	28	ug/L	06.29.18 17:18	
Carbon Tetrachloride	<0.500	20.0	18.7	94	20.3	102	67-136	8	20	ug/L	06.29.18 17:18	
Chlorobenzene	<0.500	20.0	20.4	102	22.8	114	70-130	11	20	ug/L	06.29.18 17:18	
Chloroethane	<4.00	20.0	21.2	106	20.0	100	57-156	6	20	ug/L	06.29.18 17:18	
Chloroform	<0.500	20.0	17.8	89	20.0	100	70-130	12	22	ug/L	06.29.18 17:18	
Chloromethane	<5.00	20.0	16.1	81	17.2	86	24-129	7	22	ug/L	06.29.18 17:18	
cis-1,2-Dichloroethene	<0.500	20.0	17.9	90	20.3	102	70-130	13	20	ug/L	06.29.18 17:18	
cis-1,3-Dichloropropene	<1.00	20.0	19.9	100	23.2	116	70-130	15	20	ug/L	06.29.18 17:18	
Dibromochloromethane	<0.500	20.0	17.2	86	20.1	101	70-130	16	20	ug/L	06.29.18 17:18	
Dibromomethane	<0.500	20.0	18.7	94	23.0	115	70-130	21	20	ug/L	06.29.18 17:18	R5
Dichlorodifluoromethane	<2.00	20.0	18.7	94	18.3	92	21-138	2	33	ug/L	06.29.18 17:18	
Ethylbenzene	<2.00	20.0	20.4	102	22.4	112	70-130	9	20	ug/L	06.29.18 17:18	
Hexachlorobutadiene	<5.00	20.0	21.7	109	20.5	103	64-143	6	20	ug/L	06.29.18 17:18	
Iodomethane (Methyl Iodide)	<2.00	20.0	18.6	93	19.6	98	59-133	5	20	ug/L	06.29.18 17:18	
isopropylbenzene	<2.50	20.0	20.8	104	22.7	114	70-130	9	20	ug/L	06.29.18 17:18	
m,p-Xylenes	<2.00	40.0	40.6	102	45.9	115	70-130	12	20	ug/L	06.29.18 17:18	

MS/MSD Percent Recovery	[D] = 100*(C-A) / B	LCS = Laboratory Control Sample	MS = Matrix Spike
Relative Percent Difference	RPD = 200* | (C-E) / (C+E) |	A = Parent Result	B = Spike Added
LCS/LCSD Recovery	[D] = 100 * (C) / [B]	C = MS/LCS Result	D = MSD/LCSD % Rec
Log Difference	Log Diff. = Log(Sample Duplicate) - Log(Original Sample)	E = MSD/LCSD Result	

QC Summary 589974

AMEC Foster Wheeler

Cave Creek Landfill

Analytical Method: **VOCs by SW 8260B** Prep Method: SW5030C
Seq Number: 3055253 Matrix: Waste Water Date Prep: 06.29.18
Parent Sample Id: 589977-001 MS Sample Id: 589977-001 S MSD Sample Id: 589977-001 SD

Parameter	Parent Result	Spike Amount	MS Result	MS %Rec	MSD Result	MSD %Rec	Limits	%RPD	RPD Limit	Units	Analysis Date	Flag
Methylene Chloride	<3.00	20.0	15.0	75	17.6	88	65-127	16	20	ug/L	06.29.18 17:18	
MTBE	<2.00	20.0	16.7	84	21.1	106	69-135	23	20	ug/L	06.29.18 17:18	R5
Naphthalene	<5.00	20.0	16.9	85	20.5	103	70-130	19	26	ug/L	06.29.18 17:18	
n-Butylbenzene	<2.50	20.0	20.1	101	21.0	105	70-130	4	20	ug/L	06.29.18 17:18	
n-Propylbenzene	<2.00	20.0	20.0	100	22.0	110	70-130	10	20	ug/L	06.29.18 17:18	
o-Xylene	<1.00	20.0	19.9	100	22.4	112	70-130	12	20	ug/L	06.29.18 17:18	
p-Cymene (p-Isopropyltoluene)	<1.50	20.0	23.2	116	24.4	122	70-130	5	20	ug/L	06.29.18 17:18	
Sec-Butylbenzene	<1.50	20.0	20.8	104	22.1	111	70-130	6	20	ug/L	06.29.18 17:18	
Styrene	<1.00	20.0	20.4	102	22.8	114	37-156	11	37	ug/L	06.29.18 17:18	
tert-Butylbenzene	<2.50	20.0	23.1	116	22.2	111	70-130	4	20	ug/L	06.29.18 17:18	
Tetrachloroethylene	<0.500	20.0	22.0	110	23.4	117	70-130	6	20	ug/L	06.29.18 17:18	
Toluene	<2.00	20.0	19.8	99	22.0	110	70-130	11	20	ug/L	06.29.18 17:18	
trans-1,2-dichloroethene	<0.500	20.0	17.1	86	18.6	93	69-131	8	20	ug/L	06.29.18 17:18	
Trichloroethene	<0.500	20.0	20.5	103	21.9	110	70-130	7	20	ug/L	06.29.18 17:18	
Trichlorofluoromethane	<2.00	20.0	22.3	112	22.3	112	60-133	0	20	ug/L	06.29.18 17:18	
Vinyl Acetate	<5.00	20.0	14.6	73	18.5	93	32-156	24	23	ug/L	06.29.18 17:18	R5
Vinyl Chloride	<0.500	20.0	16.7	84	17.5	88	35-139	5	21	ug/L	06.29.18 17:18	
trans-1,3-dichloropropene	<0.500	20.0	16.2	81	18.8	94	70-130	15	20	ug/L	06.29.18 17:18	
1,1,2-Trichloro-1,2,2-Trifluoroethane	<5.00	20.0	22.4	112	22.8	114	51-131	2	20	ug/L	06.29.18 17:18	
1,3-Butadiene	<5.00	20.0	12.5	63	12.8	64	37-152	2	20	ug/L	06.29.18 17:18	
Cyclohexane	<5.00	20.0	18.5	93	16.6	83	64-138	11	20	ug/L	06.29.18 17:18	
Dicyclopentadiene	<5.00	20.0	19.3	97	20.6	103	13-182	7	20	ug/L	06.29.18 17:18	
Methylcyclohexane	<5.00	20.0	20.4	102	20.4	102	70-130	0	20	ug/L	06.29.18 17:18	
n-Hexane	<5.00	20.0	17.7	89	17.4	87	62-128	2	20	ug/L	06.29.18 17:18	

Surrogate	MS %Rec	MS Flag	MSD %Rec	MSD Flag	Limits	Units	Analysis Date
4-Bromofluorobenzene	96		107		74-124	%	06.29.18 17:18
Dibromofluoromethane	93		107		75-131	%	06.29.18 17:18
1,2-Dichloroethane-D4	92		108		63-144	%	06.29.18 17:18
Toluene-D8	101		112		70-130	%	06.29.18 17:18

Analytical Method: **PAHs by 8270C SIM** Prep Method: SW3510C
Seq Number: 3054640 Matrix: Water Date Prep: 06.25.18
MB Sample Id: 7657215-1-BLK LCS Sample Id: 7657215-1-BKS LCSD Sample Id: 7657215-1-BSD

Parameter	MB Result	Spike Amount	LCS Result	LCS %Rec	LCSD Result	LCSD %Rec	Limits	%RPD	RPD Limit	Units	Analysis Date	Flag
Naphthalene	<0.000500	0.00100	0.000872	87	0.000957	96	35-116	9	25	mg/L	06.26.18 16:22	

Surrogate	MB %Rec	MB Flag	LCS %Rec	LCS Flag	LCSD %Rec	LCSD Flag	Limits	Units	Analysis Date
Nitrobenzene-d5	110		116		121		41-128	%	06.26.18 16:22
2-Fluorobiphenyl	107		108		116		55-135	%	06.26.18 16:22
Terphenyl-D14	131		124		129		54-131	%	06.26.18 16:22

MS/MSD Percent Recovery [D] = 100*(C-A) / B
Relative Percent Difference RPD = 200* | (C-E) / (C+E) |
LCS/LCSD Recovery [D] = 100 * (C) / [B]
Log Difference Log Diff. = Log(Sample Duplicate) - Log(Original Sample)

LCS = Laboratory Control Sample
A = Parent Result
C = MS/LCS Result
E = MSD/LCSD Result

MS = Matrix Spike
B = Spike Added
D = MSD/LCSD % Rec

CHAIN OF CUSTODY

Page 1 Of 1

XENCO LABORATORIES

Setting the Standard since 1990

Stafford,Texas (281-240-4200)

Dallas Texas (214-902-0300)

San Antonio, Texas (210-509-3334)

Midland, Texas (432-704-5251)

Phoenix, Arizona (480-355-0900)

www.xenco.com

Xenco Quote #080717RK-AMECFW

Xenco Job # 5899974

Client / Reporting Information

Company Name / Branch: Amec Foster Wheeler

Company Address: 4600 E Washington St. Suite 600 Phoenix, AZ 85034

Email: SAMANTHA.SARGENT@WOODPLC.COM, EMILY.LODOLCE@WOODPLC.COM

Phone No: 602.733.6030, 602.733.6081

Project Contact: Emily LoDolce or Samantha Sargent (602-733-6030)

Samplers's Name: Samantha Sargent.

Project Information

Project Name/Number: Cave Creek Landfill 1420172034.****.021

Project Location: Phoenix, AZ

Invoice To: Amec Foster Wheeler - ATTN: Samantha Sargent, 4600 E Washington St. Suite 600, Phoenix, AZ 85034

PO Number: C014101574

Analytical Information

Matrix Codes

W = Water
S = Soil/Sed/Solid
GW =Ground Water
DW = Drinking Water
P = Product
SW = Surface water
SL = Sludge
OW =Ocean/Sea Water
WI = Wipe
O = Oil

WW= Waste Water
A = Air

No.	Field ID / Point of Collection	Sample Depth	Date	Time	Matrix	# of bottles	HCl	NaOH/Zn Acetate	HNO3	H2SO4	NaOH	NaHSO4	MEOH	NONE	8270C SVOCs (Napthalene Only)	8260 VOCs	Field Comments
1	PW-734- 062118	734	6/21/18	1110	W	1								X	X		
2	MW02-714-	714	6/21/18	1230	W	1								X	X		
3	MW03-723- 062118	723	6/21/18	0950	W	1								X	X		
4	MW04-708- 062118	708	6/21/18	0730	W	1	X							X	X	X	
5	MW05-704- 062118	704	6/21/18	1200	W	1								X	X		
6	MW06-720- 062118	720	6/21/18	0905	W	1								X	X		
7	MW07-718- 062118	718	6/21/18	0810	W	1								X	X		
8	MW08-741- 062118	741	6/21/18	1040	W	1								X	X		
9	DUP01- 062118	741	6/21/18	1040	W	1								X	X		
10																	

Turnaround Time (Business days)

- ☐ Same Day TAT
- ☐ 5 Day TAT
- ☐ Next Day EMERGENCY
- ☐ 7 Day TAT
- ☐ 2 Day EMERGENCY
- ☐ Contract TAT
- ☐ 3 Day EMERGENCY
- Standard TAT

TAT Starts Day received by Lab, if received by 5:00 pm

Data Deliverable Information

- ☐ Level II Std QC
- ☐ Level IV (Full Data Pkg /raw data)
- ☐ Level III Std QC+ Forms
- ☐ TRRP Level IV
- ☐ Level 3 (CLP Forms)
- ☐ UST / RG -411
- ☐ TRRP Checklist

Notes:

FED-EX / UPS: Tracking #

SAMPLE CUSTODY MUST BE DOCUMENTED BELOW EACH TIME SAMPLES CHANGE POSSESSION, INCLUDING COURIER DELIVERY

Relinquished by Sampler:	Date Time:	Received By:	Relinquished By:	Date Time:	Received By:
1	6/21/18 1345		2		2
Relinquished by: 3	Date Time:	Received By: 3	Relinquished By: 4	Date Time:	Received By: 4
Relinquished by: 5	Date Time:	Received By: 5	Custody Seal #	Preserved where applicable ☐	On Ice ☒ Cooler Temp. 2.3 Thermo. Corr. Factor

Notice: Notice: Signature of this document and relinquishment of samples constitutes a valid purchase order from client company to Xenco, its affiliates and subcontractors. It assigns standard terms and conditions of service. Xenco will be liable only for the cost of samples and shall not assume any responsibility for any losses or expenses incurred by the Client if such loses are due to circumstances beyond the control of Xenco. A minimum charge of $75 will be applied to each project. Xenco's liability will be limited to the cost of samples. Any samples received by Xenco but not analyzed will be invoiced at $5 per sample. These terms will be enforced unless previously negotiated under a fully executed client contract.

XENCO LABORATORIES

Sample Receipt Checklist

Client Name: AMEC FW (Wood Group)

Date and Time Received: 6.21.18 @ 13:45

Work Order Number: 589974

Checked by: [illegible]

Checklist completed by: [illegible]

Logged In by: [illegible] Date: 6.21.18

Matrix: W Courier Name: Client TWA

Shipping container/cooler in good condition?	Yes ☒	No ☐	Not Present ☐
Custody seals intact on shipping container/cooler?	Yes ☐	No ☐	Not Present ☑
Custody seals intact on sample bottles?	Yes ☐	No ☐	Not Present ☑
Chain of custody signed when relinquished and received?	Yes ☒	No ☐	Not Present ☐
Chain of custody agrees with sample labels?	Yes ☒	No ☐	
Samples in proper container/bottle?	Yes ☒	No ☐	
Sample containers intact?	Yes ☒	No ☐	
Sufficient sample volume for indicated test?	Yes ☒	No ☐	
All samples received within holding time?	Yes ☒	No ☐	
All samples received same day of collection?	Yes ☒	No ☐	Temp: 2.3 Wet Ice Present ☑
Where was the temperature reading taken at?	Sample ☐	Temp Blank ☒	Other:
VOA Water – VOA vials have zero headspace?	Yes ☐	No ☐	N/A ☑
Water – Microbiological bottles have ≤ 2.5 cm headspace?	Yes ☐	No ☐	N/A ☑
Water – All sample pH's acceptable upon receipt?	Yes ☒	No ☐	N/A ☐ Checked by: [illegible]

If No, list all samples and bottle types that are not acceptable in Additional Comments section. Also state any correction actions.

Dissolved Metals – Field Filtered?	Yes ☐	No ☐	N/A ☑

Additional Comments:

SRChecklist 2016.1

Inter-Office Shipment

IOS Number **109298**

Date/Time: 06/21/18 16:07
Lab# From: **Phoenix**
Lab# To: **Houston**

Created by: Ruriko Konuma
Delivery Priority:
Air Bill No.: 772539689275

Please send report to: Skip Harden
Address: 2525 West Huntington Drive, Suite 102
Phone: Tempe, AZ 85282
E-Mail: skip.harden@xenco.com

Sample Id	Matrix	Client Sample Id	Sample Collection	Method	Method Name	Lab Due	HT Due	PM	Analytes	Sign
589974-001	W	PW-734-062118	06/21/18 11:10	SIM_PAH	PAHs by 8270C SIM	06/27/18	06/28/18	WWH	NAPH	
589974-002	W	MW02-714-062118	06/21/18 12:30	SIM_PAH	PAHs by 8270C SIM	06/27/18	06/28/18	WWH	NAPH	
589974-003	W	MW03-723-062118	06/21/18 09:50	SIM_PAH	PAHs by 8270C SIM	06/27/18	06/28/18	WWH	NAPH	
589974-004	W	MW04-708-062118	06/21/18 07:30	SIM_PAH	PAHs by 8270C SIM	06/27/18	06/28/18	WWH	NAPH	
589974-005	W	MW05-704-062118	06/21/18 12:00	SIM_PAH	PAHs by 8270C SIM	06/27/18	06/28/18	WWH	NAPH	
589974-006	W	MW06-720-062118	06/21/18 09:05	SIM_PAH	PAHs by 8270C SIM	06/27/18	06/28/18	WWH	NAPH	
589974-007	W	MW07-718-062118	06/21/18 08:10	SIM_PAH	PAHs by 8270C SIM	06/27/18	06/28/18	WWH	NAPH	
589974-008	W	MW08-741-062118	06/21/18 10:40	SIM_PAH	PAHs by 8270C SIM	06/27/18	06/28/18	WWH	NAPH	
589974-009	W	DUP01-062118	06/21/18 10:40	SIM_PAH	PAHs by 8270C SIM	06/27/18	06/28/18	WWH	NAPH	

Inter Office Shipment or Sample Comments:

Relinquished By: Ruriko Konuma

Date Relinquished: 06/21/2018

Received By: Monica Shakhshir

Date Received: 06/22/2018 09:15

Cooler Temperature: 5.9

XENCO Laboratories

Inter Office Report- Sample Receipt Checklist

Sent To: Houston

IOS #: 109298

Acceptable Temperature Range: 0 - 6 degC
Air and Metal samples Acceptable Range: Ambient
Temperature Measuring device used : HOU-068

Sent By: Ruriko Konuma **Date Sent:** 06/21/2018 04:07 PM

Received By: Monica Shakhshir **Date Received:** 06/22/2018 09:15 AM

Sample Receipt Checklist		Comments
#1 *Temperature of cooler(s)?	5.9	
#2 *Shipping container in good condition?	**Yes**	
#3 *Samples received with appropriate temperature?	**Yes**	
#4 *Custody Seals intact on shipping container/ cooler?	**Yes**	
#5 *Custody Seals Signed and dated for Containers/coolers	**Yes**	
#6 *IOS present?	**Yes**	
#7 Any missing/extra samples?	**No**	
#8 IOS agrees with sample label(s)/matrix?	**Yes**	
#9 Sample matrix/ properties agree with IOS?	**Yes**	
#10 Samples in proper container/ bottle?	**Yes**	
#11 Samples properly preserved?	**Yes**	
#12 Sample container(s) intact?	**Yes**	
#13 Sufficient sample amount for indicated test(s)?	**Yes**	
#14 All samples received within hold time?	**Yes**	

*** Must be completed for after-hours delivery of samples prior to placing in the refrigerator**

NonConformance:

Corrective Action Taken:

Nonconformance Documentation

Contact: _____ **Contacted by :** _____ **Date:** _____

Checklist reviewed by: _____ Date: 06/22/2018
Monica Shakhshir

Airtech Environmental Laboratories (AEL)
4620 E.Elwood St., Suite 13, Phoenix, AZ 85040 480-968-5888 Fax 480-966-1888

Date: May 8, 2018

Client:	Emily Corkery/Samantha Sargent	Work Order #:	18D028
Company:	Wood	Project Name:	Cave Creek Landfill
Address:	4600 E Washington St, #600	Project Number:	14-2017-2034
	Phoenix, AZ 85034	Received Date:	4/23/2018

Dear Client:

Airtech Environmental Laboratories received four (4) samples for analysis.

All analyses met laboratory QA/QC with any exceptions addressed in the Case Narrative.

If you have any questions or concerns regarding your samples analysis, please contact the laboratory at 480-968-5888

Sincerely,

Yu Min Shi
Technical Director
Airtech Environmental Labs

Arizona ADHS License No. AZ0740

Airtech Environmental Laboratories (AEL)
4620 E.Elwood St., Suite 13, Phoenix, AZ 85040 480-968-5888 Fax 480-966-1888

Date: May 8, 2018

Client:	Emily Corkery/Samantha Sargent	Work Order #:	18D028
Company:	Wood	Project Name:	Cave Creek Landfill
Address:	4600 E Washington St, #600	Project Number:	14-2017-2034
	Phoenix, AZ 85034	Received Date:	4/23/2018

SAMPLE SUMMARY

LAB ID	CLIENT ID	METHOD	SAMPLE DATE	SAMPLE TIME
18D028-01	SP4-H1-042318	TO-15	4/23/2018	1035
18D028-02	SP3-C1-042318	TO-15	4/23/2018	1040
18D028-03	SP2-C2-042318	TO-15	4/23/2018	1045
18D028-04	SP1-SkidOutlet-042318	TO-15	4/23/2018	1050

Airtech Environmental Laboratories (AEL)
4620 E.Elwood St., Suite 13, Phoenix, AZ 85040 480-968-5888 Fax 480-966-1888

Date: May 8, 2018

Client:	Emily Corkery/Samantha Sargent	Work Order #:	18D028
Company:	Wood	Project Name:	Cave Creek Landfill
Address:	4600 E Washington St, #600	Project Number:	14-2017-2034
	Phoenix, AZ 85034	Received Date:	04/23/18

Case Narrative

All samples and QC associated with your samples met the quality control objectives.
Data qualifiers in this report are in accordance with ADEQ Data Qualifiers.

Airtech Environmental Laboratories (AEL) - AZ 0740

4620 E.Elwood St., Suite 13, Phoenix, AZ 85040 480-968-5888 Fax 480-966-1888

Client:	Wood	**Client Sample ID:**	N/A
Project:	Cave Creek Landfill	**Project Number:**	14-2017-2034
Lab Order:	18D028	**Collection:**	N/A
Lab ID:	Kits QC	**Matrix:**	Air

		Canister				Grab Sampler	
		Type		Vacuum	Pressure	Type	
	Client	1.0 liter		before sampled	after sampled	1 minute-fill 1.0L canister	
AEL#	ID	SN#	Clean Batch#	Hg inch	psia	SN#	Clean Batch#
18D028-01	SP4-H1-042318	E2409	1804-14	29.0	13.57	074	1803-13
18D028-02	SP3-C1-042318	E2352	1804-14	29.0	13.86	193	1803-11
18D028-03	SP2-C2-042318	E2297	1804-15	29.0	14.08	028	1803-13
18D028-04	SP1-SkidOutlet-042318	E2393	1804-14	29.0	14.36	150	1803-13

Airtech Environmental Laboratories (AEL) - AZ 0740

4620 E.Elwood St., Suite 13, Phoenix, AZ 85040 480-968-5888 Fax 480-966-1888

Client:	Wood	**Client Sample ID:**	SP4-H1-042318
Project:	Cave Creek Landfill	**Project Number:**	14-2017-2034
Lab Order:	18D028	**Collection:**	4/23/2018
Lab ID:	01	**Matrix:**	Soil Vapor

	ppbv		ug/M^3				Date	
Analyses	**Result**	**Limit**	**Result**	**Limit**	**Qual**	**DF**	**Analyzed**	**CAS#**
VOLATILE ORGANICS IN AIR	**TO-15**						Analyst: JJ	
1,1-Dichloroethane	< 1,000	1,000	< 4,050	4,050		2,000	5/8/2018	75-34-3
1,1-Dichloroethene	< 1,000	1,000	< 3,970	3,970		2,000	5/8/2018	75-35-4
1,2-Dichlorobenzene	< 1,000	1,000	< 6,010	6,010		2,000	5/8/2018	95-50-1
1,2-Dichloroethane	< 1,000	1,000	< 4,050	4,050		2,000	5/8/2018	107-06-2
2-Butanone (MEK)	< 10,000	10,000	< 29,500	29,500		2,000	5/8/2018	78-93-3
Acetone	< 10,000	10,000	< 23,800	23,800		2,000	5/8/2018	67-64-1
Benzene	< 1,000	1,000	< 3,190	3,190		2,000	5/8/2018	71-43-2
Chlorobenzene	< 1,000	1,000	< 4,600	4,600		2,000	5/8/2018	108-90-7
Chloroform	< 1,000	1,000	< 4,880	4,880		2,000	5/8/2018	67-66-3
cis-1,2-Dichloroethene	< 1,000	1,000	< 3,960	3,960		2,000	5/8/2018	156-59-2
Dichlorodifluoromethane(F-12)	< 2,000	2,000	< 9,900	9,900		2,000	5/8/2018	75-71-8
Ethylbenzene	< 1,000	1,000	< 4,340	4,340		2,000	5/8/2018	100-41-4
m&p-Xylene	< 2,000	2,000	< 8,680	8,680		2,000	5/8/2018	179601-23-1
Methylene chloride	**67,200**	**4,000**	**233,000**	**13,900**		2,000	5/8/2018	75-09-2
o-Xylene	< 1,000	1,000	< 4,340	4,340		2,000	5/8/2018	95-47-6
Tetrachloroethene	< 2,000	2,000	< 13,600	13,600		2,000	5/8/2018	127-18-4
Tetrahydrofuran	< 4,000	4,000	< 11,800	11,800		2,000	5/8/2018	109-99-9
Toluene	< 1,000	1,000	< 3,770	3,770		2,000	5/8/2018	108-88-3
trans-1,2-Dichloroethene	< 1,000	1,000	< 3,960	3,960		2,000	5/8/2018	156-60-5
Trichloroethene	< 1,000	1,000	< 5,370	5,370		2,000	5/8/2018	79-01-6
Trichlorofluoromethane(F-11)	< 1,000	1,000	< 5,620	5,620		2,000	5/8/2018	75-69-4
Trichlorotrifluoroethane(F-113)	< 1,000	1,000	< 7,660	7,660		2,000	5/8/2018	76-13-1
Vinyl chloride	< 1,000	1,000	< 2,560	2,560		2,000	5/8/2018	75-01-4
Surr: 4-Bromofluorobenzene	94.9	70-130	%REC					

Airtech Environmental Laboratories (AEL) - AZ 0740

4620 E.Elwood St., Suite 13, Phoenix, AZ 85040 480-968-5888 Fax 480-966-1888

Client:	Wood	**Client Sample ID:**	SP3-C1-042318
Project:	Cave Creek Landfill	**Project Number:**	14-2017-2034
Lab Order:	18D028	**Collection:**	4/23/2018
Lab ID:	02	**Matrix:**	Soil Vapor

	ppbv		ug/M^3				Date	
Analyses	**Result**	**Limit**	**Result**	**Limit**	**Qual**	**DF**	**Analyzed**	**CAS#**
VOLATILE ORGANICS IN AIR	**TO-15**						Analyst: JJ	
1,1-Dichloroethane	< 1,000	1,000	< 4,050	4,050		2,000	5/8/2018	75-34-3
1,1-Dichloroethene	< 1,000	1,000	< 3,970	3,970		2,000	5/8/2018	75-35-4
1,2-Dichlorobenzene	< 1,000	1,000	< 6,010	6,010		2,000	5/8/2018	95-50-1
1,2-Dichloroethane	< 1,000	1,000	< 4,050	4,050		2,000	5/8/2018	107-06-2
2-Butanone (MEK)	< 10,000	10,000	< 29,500	29,500		2,000	5/8/2018	78-93-3
Acetone	< 10,000	10,000	< 23,800	23,800		2,000	5/8/2018	67-64-1
Benzene	< 1,000	1,000	< 3,190	3,190		2,000	5/8/2018	71-43-2
Chlorobenzene	< 1,000	1,000	< 4,600	4,600		2,000	5/8/2018	108-90-7
Chloroform	< 1,000	1,000	< 4,880	4,880		2,000	5/8/2018	67-66-3
cis-1,2-Dichloroethene	< 1,000	1,000	< 3,960	3,960		2,000	5/8/2018	156-59-2
Dichlorodifluoromethane(F-12)	< 2,000	2,000	< 9,900	9,900		2,000	5/8/2018	75-71-8
Ethylbenzene	< 1,000	1,000	< 4,340	4,340		2,000	5/8/2018	100-41-4
m&p-Xylene	< 2,000	2,000	< 8,680	8,680		2,000	5/8/2018	179601-23-1
Methylene chloride	**57,500**	**4,000**	**200,000**	**13,880**		2,000	5/8/2018	75-09-2
o-Xylene	< 1,000	1,000	< 4,340	4,340		2,000	5/8/2018	95-47-6
Tetrachloroethene	< 2,000	2,000	< 13,600	13,600		2,000	5/8/2018	127-18-4
Tetrahydrofuran	< 4,000	4,000	< 11,800	11,800		2,000	5/8/2018	109-99-9
Toluene	< 1,000	1,000	< 3,770	3,770		2,000	5/8/2018	108-88-3
trans-1,2-Dichloroethene	< 1,000	1,000	< 3,960	3,960		2,000	5/8/2018	156-60-5
Trichloroethene	< 1,000	1,000	< 5,370	5,370		2,000	5/8/2018	79-01-6
Trichlorofluoromethane(F-11)	< 1,000	1,000	< 5,620	5,620		2,000	5/8/2018	75-69-4
Trichlorotrifluoroethane(F-113)	< 1,000	1,000	< 7,660	7,660		2,000	5/8/2018	76-13-1
Vinyl chloride	**1,260**	**1,000**	**3,230**	**2,560**		2,000	5/8/2018	75-01-4
Surr: 4-Bromofluorobenzene	95.2	70-130	%REC					

Airtech Environmental Laboratories (AEL) - AZ 0740

4620 E.Elwood St., Suite 13, Phoenix, AZ 85040 480-968-5888 Fax 480-966-1888

Client:	Wood	**Client Sample ID:**	SP2-C2-042318
Project:	Cave Creek Landfill	**Project Number:**	14-2017-2034
Lab Order:	18D028	**Collection:**	4/23/2018
Lab ID:	03	**Matrix:**	Soil Vapor

	ppbv		ug/M^3				Date	
Analyses	**Result**	**Limit**	**Result**	**Limit**	**Qual**	**DF**	**Analyzed**	**CAS#**
VOLATILE ORGANICS IN AIR	**TO-15**						Analyst: JJ	
1,1-Dichloroethane	< 1,000	1,000	< 4,050	4,050		2,000	5/8/2018	75-34-3
1,1-Dichloroethene	< 1,000	1,000	< 3,970	3,970		2,000	5/8/2018	75-35-4
1,2-Dichlorobenzene	< 1,000	1,000	< 6,010	6,010		2,000	5/8/2018	95-50-1
1,2-Dichloroethane	< 1,000	1,000	< 4,050	4,050		2,000	5/8/2018	107-06-2
2-Butanone (MEK)	< 10,000	10,000	< 29,500	29,500		2,000	5/8/2018	78-93-3
Acetone	< 10,000	10,000	< 23,800	23,800		2,000	5/8/2018	67-64-1
Benzene	< 1,000	1,000	< 3,190	3,190		2,000	5/8/2018	71-43-2
Chlorobenzene	< 1,000	1,000	< 4,600	4,600		2,000	5/8/2018	108-90-7
Chloroform	< 1,000	1,000	< 4,880	4,880		2,000	5/8/2018	67-66-3
cis-1,2-Dichloroethene	< 1,000	1,000	< 3,960	3,960		2,000	5/8/2018	156-59-2
Dichlorodifluoromethane(F-12)	< 2,000	2,000	< 9,900	9,900		2,000	5/8/2018	75-71-8
Ethylbenzene	< 1,000	1,000	< 4,340	4,340		2,000	5/8/2018	100-41-4
m&p-Xylene	< 2,000	2,000	< 8,680	8,680		2,000	5/8/2018	179601-23-1
Methylene chloride	**54,700**	**4,000**	**190,000**	**13,880**		2,000	5/8/2018	75-09-2
o-Xylene	< 1,000	1,000	< 4,340	4,340		2,000	5/8/2018	95-47-6
Tetrachloroethene	< 2,000	2,000	< 13,600	13,600		2,000	5/8/2018	127-18-4
Tetrahydrofuran	< 4,000	4,000	< 11,800	11,800		2,000	5/8/2018	109-99-9
Toluene	< 1,000	1,000	< 3,770	3,770		2,000	5/8/2018	108-88-3
trans-1,2-Dichloroethene	< 1,000	1,000	< 3,960	3,960		2,000	5/8/2018	156-60-5
Trichloroethene	< 1,000	1,000	< 5,370	5,370		2,000	5/8/2018	79-01-6
Trichlorofluoromethane(F-11)	< 1,000	1,000	< 5,620	5,620		2,000	5/8/2018	75-69-4
Trichlorotrifluoroethane(F-113)	< 1,000	1,000	< 7,660	7,660		2,000	5/8/2018	76-13-1
Vinyl chloride	< 1,000	1,000	< 2,560	2,560		2,000	5/8/2018	75-01-4
Surr: 4-Bromofluorobenzene	92.9	70-130	%REC					

Airtech Environmental Laboratories (AEL) - AZ 0740

4620 E.Elwood St., Suite 13, Phoenix, AZ 85040 480-968-5888 Fax 480-966-1888

Client:	Wood	**Client Sample ID:**	SP1-SkidOutlet-042318
Project:	Cave Creek Landfill	**Project Number:**	14-2017-2034
Lab Order:	18D028	**Collection:**	4/23/2018
Lab ID:	04	**Matrix:**	Soil Vapor

	ppbv		ug/M^3				Date	
Analyses	**Result**	**Limit**	**Result**	**Limit**	**Qual**	**DF**	**Analyzed**	**CAS#**
VOLATILE ORGANICS IN AIR	**TO-15**						Analyst: JJ	
1,1-Dichloroethane	< 2,500	2,500	< 10,100	10,100		5,000	5/8/2018	75-34-3
1,1-Dichloroethene	**52,900**	**2,500**	**210,000**	**9,930**		5,000	5/8/2018	75-35-4
1,2-Dichlorobenzene	< 2,500	2,500	< 15,000	15,000		5,000	5/8/2018	95-50-1
1,2-Dichloroethane	< 2,500	2,500	< 10,100	10,100		5,000	5/8/2018	107-06-2
2-Butanone (MEK)	< 25,000	25,000	< 73,800	73,800		5,000	5/8/2018	78-93-3
Acetone	< 25,000	25,000	< 59,500	59,500		5,000	5/8/2018	67-64-1
Benzene	< 2,500	2,500	< 7,980	7,980		5,000	5/8/2018	71-43-2
Chlorobenzene	< 2,500	2,500	< 11,500	11,500		5,000	5/8/2018	108-90-7
Chloroform	< 2,500	2,500	< 12,200	12,200		5,000	5/8/2018	67-66-3
cis-1,2-Dichloroethene	**8,150**	**2,500**	**32,300**	**9,900**		5,000	5/8/2018	156-59-2
Dichlorodifluoromethane(F-12)	< 5,000	5,000	< 24,800	24,800		5,000	5/8/2018	75-71-8
Ethylbenzene	< 2,500	2,500	< 10,900	10,900		5,000	5/8/2018	100-41-4
m&p-Xylene	< 5,000	5,000	< 21,700	21,700		5,000	5/8/2018	179601-23-1
Methylene chloride	**53,400**	**10,000**	**185,000**	**34,700**		5,000	5/8/2018	75-09-2
o-Xylene	< 2,500	2,500	< 10,900	10,900		5,000	5/8/2018	95-47-6
Tetrachloroethene	**10,400**	**5,000**	**70,500**	**33,900**		5,000	5/8/2018	127-18-4
Tetrahydrofuran	< 10,000	10,000	< 29,500	29,500		5,000	5/8/2018	109-99-9
Toluene	< 2,500	2,500	< 9,430	9,430		5,000	5/8/2018	108-88-3
trans-1,2-Dichloroethene	< 2,500	2,500	< 9,900	9,900		5,000	5/8/2018	156-60-5
Trichloroethene	**77,900**	**2,500**	**418,000**	**13,400**		5,000	5/8/2018	79-01-6
Trichlorofluoromethane(F-11)	< 2,500	2,500	< 14,100	14,100		5,000	5/8/2018	75-69-4
Trichlorotrifluoroethane(F-113)	**21,000**	**2,500**	**161,000**	**19,200**		5,000	5/8/2018	76-13-1
Vinyl chloride	< 2,500	2,500	< 6,400	6,400		5,000	5/8/2018	75-01-4
Surr: 4-Bromofluorobenzene	95.6	70-130	%REC					

Airtech Environmental Laboratories (AEL) - AZ 0740

4620 E.Elwood St., Suite 13, Phoenix, AZ 85040 480-968-5888 Fax 480-966-1888

Client:	Wood	**Client Sample ID:**	N/A
Project:	Cave Creek Landfill	**Project Number:**	14-2017-2034
Lab Order:	18D028	**Collection:**	N/A
Lab ID:	Blank	**Matrix:**	Nitrogen

Method QC Data

Batch: MS010507 Analyst: JJ

Analyses	ppbv Result	ppbv Limit	ug/M^3 Result	ug/M^3 Limit	Qual	DF	Date Analyzed	CAS#
VOLATILE ORGANICS IN AIR		**TO-15**					Analyst: JJ	
1,1-Dichloroethane	< 0.5	0.5	< 2.03	2.03		1	5/8/2018	75-34-3
1,1-Dichloroethene	< 0.5	0.5	< 1.99	1.99		1	5/8/2018	75-35-4
1,2-Dichlorobenzene	< 0.5	0.5	< 3.01	3.01		1	5/8/2018	95-50-1
1,2-Dichloroethane	< 0.5	0.5	< 2.03	2.03		1	5/8/2018	107-06-2
2-Butanone (MEK)	< 5.0	5.0	< 14.8	14.8		1	5/8/2018	78-93-3
Acetone	< 5.0	5.0	< 11.9	11.9		1	5/8/2018	67-64-1
Benzene	< 0.5	0.5	< 1.60	1.60		1	5/8/2018	71-43-2
Chlorobenzene	< 0.5	0.5	< 2.30	2.30		1	5/8/2018	108-90-7
Chloroform	< 0.5	0.5	< 2.44	2.44		1	5/8/2018	67-66-3
cis-1,2-Dichloroethene	< 0.5	0.5	< 1.98	1.98		1	5/8/2018	156-59-2
Dichlorodifluoromethane(F-12)	< 1.0	1.0	< 4.95	4.95		1	5/8/2018	75-71-8
Ethylbenzene	< 0.5	0.5	< 2.17	2.17		1	5/8/2018	100-41-4
m&p-Xylene	< 1.0	1.0	< 4.34	4.34		1	5/8/2018	179601-23-1
Methylene chloride	< 2.0	2.0	< 6.94	6.94		1	5/8/2018	75-09-2
o-Xylene	< 0.5	0.5	< 2.17	2.17		1	5/8/2018	95-47-6
Tetrachloroethene	< 1.0	1.0	< 6.78	6.78		1	5/8/2018	127-18-4
Tetrahydrofuran	< 2.0	2.0	< 5.90	5.90		1	5/8/2018	109-99-9
Toluene	< 0.5	0.5	< 1.89	1.89		1	5/8/2018	108-88-3
trans-1,2-Dichloroethene	< 0.5	0.5	< 1.98	1.98		1	5/8/2018	156-60-5
Trichloroethene	< 0.5	0.5	< 2.69	2.69		1	5/8/2018	79-01-6
Trichlorofluoromethane(F-11)	< 0.5	0.5	< 2.81	2.81		1	5/8/2018	75-69-4
Trichlorotrifluoroethane(F-113)	< 0.5	0.5	< 3.83	3.83		1	5/8/2018	76-13-1
Vinyl chloride	< 0.5	0.5	< 1.28	1.28		1	5/8/2018	75-01-4
Surr: 4-Bromofluorobenzene	94.7	70-130	%REC					

Airtech Environmental Laboratories (AEL) - AZ 0740

4620 E.Elwood St., Suite 13, Phoenix, AZ 85040 480-968-5888 Fax 480-966-1888

Client:	Wood	**Client Sample ID:**	N/A
Project:	Cave Creek Landfill	**Project Number:**	14-2017-2034
Lab Order:	18D028	**Collection:**	N/A
Lab ID:	LCS/LCSD	**Matrix:**	Nitrogen

Method QC Data

Date Analyzed: 5/7/2018 Batch: MS010507 Analyst: JJ

Analyses	LCS Result	LCS %REC	LCSD Result	LCSD %REC	T.V.	%RPD	Unit	Qualifier LCS	Qualifier LCSD	Qualifier RPD
VOLATILE ORGANICS IN AIR	**TO-15**							70-130%		<25%
Dichlorodifluoromethane(F-12)	10.3	103	10.4	104	10.0	0.6	ppbv			
Vinyl Chloride	10.4	104	11.4	114	10.0	8.9	ppbv			
Trichlorofluoromethane (F-11)	9.6	96.2	10.1	101	10.0	4.8	ppbv			
Acetone	8.0	80.2	9.1	91.4	10.0	13.1	ppbv			
1,1-Dichloroethene	8.9	88.9	9.9	99.1	10.0	10.9	ppbv			
Trichlorotrifluoroethane (F-113)	9.3	93.0	10.0	99.7	10.0	7.0	ppbv			
Methylene Chloride	9.1	90.6	9.9	98.5	10.0	8.4	ppbv			
trans-1,2-Dichloroethene	9.3	93.0	9.7	97.4	10.0	4.6	ppbv			
1,1-Dichloroethane	8.7	87.4	9.8	97.9	10.0	11.3	ppbv			
2-Butanone (MEK)	7.9	79.0	9.0	89.8	10.0	12.8	ppbv			
cis-1,2-Dichloroethene	9.1	91.4	9.5	95.1	10.0	4.0	ppbv			
Chloroform	8.8	88.3	9.3	93.3	10.0	5.5	ppbv			
Tetrahydrofuran	7.6	75.9	8.8	88.2	10.0	15.0	ppbv			
1,2-Dichloroethane	8.0	80.1	8.8	87.5	10.0	8.8	ppbv			
Benzene	8.2	81.7	8.9	89.3	10.0	8.9	ppbv			
Trichloroethene	9.7	96.8	10.5	105	10.0	7.7	ppbv			
Toluene	8.3	83.1	9.5	94.8	10.0	13.2	ppbv			
Tetrachloroethene	9.7	97.0	10.4	104	10.0	7.2	ppbv			
Chlorobenzene	9.2	91.5	9.2	91.5	10.0	0.0	ppbv			
Ethylbenzene	9.1	91.2	9.2	91.5	10.0	0.3	ppbv			
m&p-Xylene	18.1	90.7	18.3	91.4	20.0	0.7	ppbv			
o-Xylene	8.9	89.2	8.9	88.6	10.0	0.7	ppbv			
1,2-Dichlorobenzene	8.9	89.1	8.4	83.6	10.0	6.4	ppbv			
Surr: 4-Bromofluorobenzene	10.8	108	9.9	99.4		8.0	%REC			
		70-130%		70-130%						

Airtech Environmental Laboratories (AEL) - AZ 0740

4620 E.Elwood St., Suite 13, Phoenix, AZ 85040 480-968-5888 Fax 480-966-1888

Client:	Wood	**Client Sample ID:**	NA
Project:	Cave Creek Landfill	**Project Number:**	14-2017-2034
Lab Order:	18D028	**Collection:**	NA
Lab ID:	Standards	**Matrix:**	Nitrogen

AEL ID#	STD Name	Vendor	SGI Order#	Description	CONC.	Accuracy	Exp.Date
S-170623-01	Stock	Spectra Gases	113123527	TO-14 39 Analytes	1.0 ppmv	± 5%	6/23/2018
S-170824-01	Stock	Spectra Gases	113123527	TO-15 25 Analytes	1.0 ppmv	± 5%	8/24/2018
S-170623-02	Stock	Spectra Gases	113123527	15 Additional Compounds	1.0 ppmv	± 5%	6/23/2018
S-171019-01	Stock	Spectra Gases	114560630	TO-15 IS 4 Compounds	1.0 ppmv	± 5%	10/19/2018
A-180507-01	Working Std	AEL Dilution		TO-15 74 Analytes	10 ppbv	± 5%	6/23/2018
A-180423-02	Working IS	AEL Dilution		TO-15 IS 4 Compounds	50 ppbv	± 5%	7/23/2018

Airtech Environmental Laboratories (AEL)

Chain of Custody

4620 E.Elwood Street, Suite 13, Phoenix, AZ 85040 480-968-5888 (phone) 480-966-1888 (fax)

Customer : Wood.	Page 1 of 1		AEL Lab #
Address: 4600 East Washington Street, Suite #600	Sampler: Eric Miller	Phone: (602) 300-8313	18D028
	Project Name: Cave Creek Landfill	Project Number: 14-2017-2034	
City, State, Zip: Phoenix, AZ 85034	Project location: Cave Creek, AZ		
Contact: Emily Corkery / Samantha Sargent	P.O. Number:		
Phone: (602) 733-6000 Fax: (602) 733-6100	Fax Results: Y N		
E-Mail Address: Emily.Corkery@amecfw.com	E-Mail Results: (Y) N		

Sample Receipt	Turn Around Request	Sample Type
Temperature_____ °C	____ 24 Hours ____ 48 Hours	SVE: soil vapor extraction GW: ground water
Custody Seals: Yes_____ No_____	____ 72 Hours	A: ambient air WW: waste water
Custody Seals Intact: Yes_____ No_____	____ 5 working Day	I: indoor air
Total # of Containers:_____	X Standard 10 Working Days	S: soil vapor
		W: water

Sample Information

AEL Lab #	Serial # Canister	Serial # Grab	Canister (L) or bag	Grab (Min)	Client's Sample Identification	Sampled Date	Sampled Time	Sample Type	Number of Containers	TO-15 full list	TO-15 TPH(GRO)	TO-15 Selet List	8260B AZ Vapor full list	8260B Vapor select list	8015 GRO	8260B Water			DFA tracer cmpd. as TIC
01	E2409	074	6 (1) bag	(1) 2 5	SP4-H1-042318	4.23.18	1035	S	1			X							
02	E2352	193	6 (1) bag	(1) 2 5	SP3-C1-042318	↓	1040	↓	↓			X							
03	E2297	028	6 (1) bag	(1) 2 5	SP2-C2-042318	↓	1045	↓	↓			X							
04	E2393	150	6 (1) bag	(1) 2 5	SP1-SKIDOUTLET-042318	↓	1050	↓	↓			X							
			6 1 bag	1 2 5															
			6 1 bag	1 2 5															
			6 1 bag	1 2 5															
			6 1 bag	1 2 5															
			6 1 bag	1 2 5															
			6 1 bag	1 2 5															

Instructions / Special Requirements:

Date:	Time:	Samples Relinquished By:	Received By:
4.23.18	1240	E. Miller	Tamu Jones Airtech

Airtech Environmental Laboratories (AEL)
4620 E.Elwood St., Suite 13, Phoenix, AZ 85040 480-968-5888 Fax 480-966-1888

Date: June 6, 2018

Client:	Natalie Chrisman	Work Order #:	18E015
Company:	Wood	Project Name:	Cave Creek Landfill
Address:	4600 E Washington St, #600	Project Number:	14-2017-2034
	Phoenix, AZ 85034	Received Date:	5/23/2018

Dear Client:

Airtech Environmental Laboratories received four (4) samples for analysis.

All analyses met laboratory QA/QC with any exceptions addressed in the Case Narrative.

If you have any questions or concerns regarding your samples analysis, please contact the laboratory at 480-968-5888

Sincerely,

Yu Min Shi
Technical Director
Airtech Environmental Labs

Arizona ADHS License No. AZ0740

Airtech Environmental Laboratories (AEL)
4620 E.Elwood St., Suite 13, Phoenix, AZ 85040 480-968-5888 Fax 480-966-1888

Date: June 6, 2018

Client:	Natalie Chrisman	Work Order #:	18E015
Company:	Wood	Project Name:	Cave Creek Landfill
Address:	4600 E Washington St, #600	Project Number:	14-2017-2034
	Phoenix, AZ 85034	Received Date:	5/23/2018

SAMPLE SUMMARY

LAB ID	CLIENT ID	METHOD	SAMPLE DATE	SAMPLE TIME
18E015-01	SP4-H1-052318	TO-15	5/23/2018	1105
18E015-02	SP3-C3-052318	TO-15	5/23/2018	1110
18E015-03	SP2-C2-052318	TO-15	5/23/2018	1115
18E015-04	SP1-SkidOutlet-052318	TO-15	5/23/2018	1120

Airtech Environmental Laboratories (AEL)
4620 E.Elwood St., Suite 13, Phoenix, AZ 85040 480-968-5888 Fax 480-966-1888

Date: June 6, 2018

Client:	Natalie Chrisman	Work Order #:	18E015
Company:	Wood	Project Name:	Cave Creek Landfill
Address:	4600 E Washington St, #600	Project Number:	14-2017-2034
	Phoenix, AZ 85034	Received Date:	05/23/18

Case Narrative

All samples and QC associated with your samples met the quality control objectives.
Data qualifiers in this report are in accordance with ADEQ Data Qualifiers.

Airtech Environmental Laboratories (AEL) - AZ 0740

4620 E.Elwood St., Suite 13, Phoenix, AZ 85040 480-968-5888 Fax 480-966-1888

Client:	Wood	**Client Sample ID:**	N/A
Project:	Cave Creek Landfill	**Project Number:**	14-2017-2034
Lab Order:	18E015	**Collection:**	N/A
Lab ID:	Kits QC	**Matrix:**	Air

		Canister				Grab Sampler	
		Type		Vacuum	Pressure	Type	
	Client	1.0 liter		before sampled	after sampled	1 minute-fill 1.0L canister	
AEL#	ID	SN#	Clean Batch#	Hg inch	psia	SN#	Clean Batch#
18E015-01	SP4-H1-052318	1798	1805-01	29.0	13.80	048	1803-13
18E015-02	SP3-C3-052318	E2095	1804-20	29.0	14.10	085	1804-07
18E015-03	SP2-C2-052318	E2359	1804-20	29.0	14.30	014	1803-13
18E015-04	SP1-SkidOutlet-052318	1841	1805-01	29.0	14.12	105	1803-13

Airtech Environmental Laboratories (AEL) - AZ 0740

4620 E.Elwood St., Suite 13, Phoenix, AZ 85040 480-968-5888 Fax 480-966-1888

Client:	Wood	**Client Sample ID:**	SP4-H1-052318
Project:	Cave Creek Landfill	**Project Number:**	14-2017-2034
Lab Order:	18E015	**Collection:**	5/23/2018
Lab ID:	01	**Matrix:**	Soil vapor

	ppbv		ug/M^3				Date	
Analyses	**Result**	**Limit**	**Result**	**Limit**	**Qual**	**DF**	**Analyzed**	**CAS#**
VOLATILE ORGANICS IN AIR	**TO-15**						Analyst: JJ	
1,1-Dichloroethane	< 500	500	< 2,025	2,025		1,000	5/31/2018	75-34-3
1,1-Dichloroethene	< 500	500	< 1,985	1,985		1,000	5/31/2018	75-35-4
1,2-Dichlorobenzene	< 500	500	< 3,005	3,005		1,000	5/31/2018	95-50-1
1,2-Dichloroethane	< 500	500	< 2,025	2,025		1,000	5/31/2018	107-06-2
2-Butanone (MEK)	< 5,000	5,000	< 14,750	14,750		1,000	5/31/2018	78-93-3
Acetone	< 5,000	5,000	< 11,900	11,900		1,000	5/31/2018	67-64-1
Benzene	< 500	500	< 1,595	1,595		1,000	5/31/2018	71-43-2
Chlorobenzene	< 500	500	< 2,300	2,300		1,000	5/31/2018	108-90-7
Chloroform	< 500	500	< 2,440	2,440		1,000	5/31/2018	67-66-3
cis-1,2-Dichloroethene	< 500	500	< 1,980	1,980		1,000	5/31/2018	156-59-2
Dichlorodifluoromethane(F-12)	**3,510**	**1,000**	**17,380**	**4,950**		1,000	5/31/2018	75-71-8
Ethylbenzene	< 500	500	< 2,170	2,170		1,000	5/31/2018	100-41-4
m&p-Xylene	< 1,000	1,000	< 4,340	4,340		1,000	5/31/2018	179601-23-1
Methylene chloride	**73,800**	**8,000**	**256,100**	**27,760**		4,000	5/31/2018	75-09-2
o-Xylene	< 500	500	< 2,170	2,170		1,000	5/31/2018	95-47-6
Tetrachloroethene	< 1,000	1,000	< 6,780	6,780		1,000	5/31/2018	127-18-4
Tetrahydrofuran	< 2,000	2,000	< 5,900	5,900		1,000	5/31/2018	109-99-9
Toluene	< 500	500	< 1,885	1,885		1,000	5/31/2018	108-88-3
trans-1,2-Dichloroethene	< 500	500	< 1,980	1,980		1,000	5/31/2018	156-60-5
Trichloroethene	< 500	500	< 2,685	2,685		1,000	5/31/2018	79-01-6
Trichlorofluoromethane(F-11)	< 500	500	< 2,810	2,810		1,000	5/31/2018	75-69-4
Trichlorotrifluoroethane(F-113)	< 500	500	< 3,830	3,830		1,000	5/31/2018	76-13-1
Vinyl chloride	< 500	500	< 1,280	1,280		1,000	5/31/2018	75-01-4
Surr: 4-Bromofluorobenzene	98.5	70-130	%REC					

Airtech Environmental Laboratories (AEL) - AZ 0740

4620 E.Elwood St., Suite 13, Phoenix, AZ 85040 480-968-5888 Fax 480-966-1888

Client:	Wood	**Client Sample ID:**	SP3-C3-052318
Project:	Cave Creek Landfill	**Project Number:**	14-2017-2034
Lab Order:	18E015	**Collection:**	5/23/2018
Lab ID:	02	**Matrix:**	Soil vapor

	ppbv		ug/M^3				Date	
Analyses	**Result**	**Limit**	**Result**	**Limit**	**Qual**	**DF**	**Analyzed**	**CAS#**
VOLATILE ORGANICS IN AIR	**TO-15**						Analyst: JJ	
1,1-Dichloroethane	< 500	500	< 2,025	2,025		1,000	5/31/2018	75-34-3
1,1-Dichloroethene	< 500	500	< 1,985	1,985		1,000	5/31/2018	75-35-4
1,2-Dichlorobenzene	< 500	500	< 3,005	3,005		1,000	5/31/2018	95-50-1
1,2-Dichloroethane	< 500	500	< 2,025	2,025		1,000	5/31/2018	107-06-2
2-Butanone (MEK)	< 5,000	5,000	< 14,750	14,750		1,000	5/31/2018	78-93-3
Acetone	< 5,000	5,000	< 11,900	11,900		1,000	5/31/2018	67-64-1
Benzene	< 500	500	< 1,595	1,595		1,000	5/31/2018	71-43-2
Chlorobenzene	< 500	500	< 2,300	2,300		1,000	5/31/2018	108-90-7
Chloroform	< 500	500	< 2,440	2,440		1,000	5/31/2018	67-66-3
cis-1,2-Dichloroethene	< 500	500	< 1,980	1,980		1,000	5/31/2018	156-59-2
Dichlorodifluoromethane(F-12)	**2,230**	**1,000**	**11,040**	**4,950**		1,000	5/31/2018	75-71-8
Ethylbenzene	< 500	500	< 2,170	2,170		1,000	5/31/2018	100-41-4
m&p-Xylene	< 1,000	1,000	< 4,340	4,340		1,000	5/31/2018	179601-23-1
Methylene chloride	**29,700**	**8,000**	**103,100**	**27,760**		4,000	5/31/2018	75-09-2
o-Xylene	< 500	500	< 2,170	2,170		1,000	5/31/2018	95-47-6
Tetrachloroethene	< 1,000	1,000	< 6,780	6,780		1,000	5/31/2018	127-18-4
Tetrahydrofuran	< 2,000	2,000	< 5,900	5,900		1,000	5/31/2018	109-99-9
Toluene	< 500	500	< 1,885	1,885		1,000	5/31/2018	108-88-3
trans-1,2-Dichloroethene	< 500	500	< 1,980	1,980		1,000	5/31/2018	156-60-5
Trichloroethene	< 500	500	< 2,685	2,685		1,000	5/31/2018	79-01-6
Trichlorofluoromethane(F-11)	< 500	500	< 2,810	2,810		1,000	5/31/2018	75-69-4
Trichlorotrifluoroethane(F-113)	< 500	500	< 3,830	3,830		1,000	5/31/2018	76-13-1
Vinyl chloride	**1,390**	**500**	**3,558**	**1,280**		1,000	5/31/2018	75-01-4
Surr: 4-Bromofluorobenzene	97.5	70-130	%REC					

Airtech Environmental Laboratories (AEL) - AZ 0740

4620 E.Elwood St., Suite 13, Phoenix, AZ 85040 480-968-5888 Fax 480-966-1888

Client:	Wood	**Client Sample ID:**	SP2-C2-052318
Project:	Cave Creek Landfill	**Project Number:**	14-2017-2034
Lab Order:	18E015	**Collection:**	5/23/2018
Lab ID:	03	**Matrix:**	Soil vapor

	ppbv		ug/M^3				Date	
Analyses	**Result**	**Limit**	**Result**	**Limit**	**Qual**	**DF**	**Analyzed**	**CAS#**
VOLATILE ORGANICS IN AIR	**TO-15**						Analyst: JJ	
1,1-Dichloroethane	< 500	500	< 2,025	2,025		1,000	5/31/2018	75-34-3
1,1-Dichloroethene	< 500	500	< 1,985	1,985		1,000	5/31/2018	75-35-4
1,2-Dichlorobenzene	< 500	500	< 3,005	3,005		1,000	5/31/2018	95-50-1
1,2-Dichloroethane	< 500	500	< 2,025	2,025		1,000	5/31/2018	107-06-2
2-Butanone (MEK)	< 5,000	5,000	< 14,750	14,750		1,000	5/31/2018	78-93-3
Acetone	< 5,000	5,000	< 11,900	11,900		1,000	5/31/2018	67-64-1
Benzene	< 500	500	< 1,595	1,595		1,000	5/31/2018	71-43-2
Chlorobenzene	< 500	500	< 2,300	2,300		1,000	5/31/2018	108-90-7
Chloroform	< 500	500	< 2,440	2,440		1,000	5/31/2018	67-66-3
cis-1,2-Dichloroethene	< 500	500	< 1,980	1,980		1,000	5/31/2018	156-59-2
Dichlorodifluoromethane(F-12)	**2,640**	**1,000**	**13,070**	**4,950**		1,000	5/31/2018	75-71-8
Ethylbenzene	< 500	500	< 2,170	2,170		1,000	5/31/2018	100-41-4
m&p-Xylene	< 1,000	1,000	< 4,340	4,340		1,000	5/31/2018	179601-23-1
Methylene chloride	**103,000**	**8,000**	**357,400**	**27,760**		4,000	5/31/2018	75-09-2
o-Xylene	< 500	500	< 2,170	2,170		1,000	5/31/2018	95-47-6
Tetrachloroethene	< 1,000	1,000	< 6,780	6,780		1,000	5/31/2018	127-18-4
Tetrahydrofuran	< 2,000	2,000	< 5,900	5,900		1,000	5/31/2018	109-99-9
Toluene	< 500	500	< 1,885	1,885		1,000	5/31/2018	108-88-3
trans-1,2-Dichloroethene	< 500	500	< 1,980	1,980		1,000	5/31/2018	156-60-5
Trichloroethene	< 500	500	< 2,685	2,685		1,000	5/31/2018	79-01-6
Trichlorofluoromethane(F-11)	< 500	500	< 2,810	2,810		1,000	5/31/2018	75-69-4
Trichlorotrifluoroethane(F-113)	< 500	500	< 3,830	3,830		1,000	5/31/2018	76-13-1
Vinyl chloride	**1,600**	**500**	**4,096**	**1,280**		1,000	5/31/2018	75-01-4
Surr: 4-Bromofluorobenzene	96.7	70-130	%REC					

Airtech Environmental Laboratories (AEL) - AZ 0740

4620 E.Elwood St., Suite 13, Phoenix, AZ 85040 480-968-5888 Fax 480-966-1888

Client:	Wood	**Client Sample ID:**	SP1-SkidOutlet-052318
Project:	Cave Creek Landfill	**Project Number:**	14-2017-2034
Lab Order:	18E015	**Collection:**	5/23/2018
Lab ID:	04	**Matrix:**	Soil vapor

	ppbv		ug/M^3				Date	
Analyses	**Result**	**Limit**	**Result**	**Limit**	**Qual**	**DF**	**Analyzed**	**CAS#**
VOLATILE ORGANICS IN AIR	**TO-15**						Analyst: JJ	
1,1-Dichloroethane	< 2,500	2,500	< 10,130	10,130		5,000	5/31/2018	75-34-3
1,1-Dichloroethene	**47,500**	**2,500**	**188,600**	**9,925**		5,000	5/31/2018	75-35-4
1,2-Dichlorobenzene	< 2,500	2,500	< 15,030	15,030		5,000	5/31/2018	95-50-1
1,2-Dichloroethane	< 2,500	2,500	< 10,130	10,130		5,000	5/31/2018	107-06-2
2-Butanone (MEK)	< 25,000	25,000	< 73,750	73,750		5,000	5/31/2018	78-93-3
Acetone	< 25,000	25,000	< 59,500	59,500		5,000	5/31/2018	67-64-1
Benzene	< 2,500	2,500	< 7,975	7,975		5,000	5/31/2018	71-43-2
Chlorobenzene	< 2,500	2,500	< 11,500	11,500		5,000	5/31/2018	108-90-7
Chloroform	< 2,500	2,500	< 12,200	12,200		5,000	5/31/2018	67-66-3
cis-1,2-Dichloroethene	**5,800**	**2,500**	**22,970**	**9,900**		5,000	5/31/2018	156-59-2
Dichlorodifluoromethane(F-12)	< 5,000	5,000	< 24,750	24,750		5,000	5/31/2018	75-71-8
Ethylbenzene	< 2,500	2,500	< 10,850	10,850		5,000	5/31/2018	100-41-4
m&p-Xylene	< 5,000	5,000	< 21,700	21,700		5,000	5/31/2018	179601-23-1
Methylene chloride	**56,100**	**10,000**	**194,700**	**34,700**		5,000	5/31/2018	75-09-2
o-Xylene	< 2,500	2,500	< 10,850	10,850		5,000	5/31/2018	95-47-6
Tetrachloroethene	**5,800**	**5,000**	**39,320**	**33,900**		5,000	5/31/2018	127-18-4
Tetrahydrofuran	< 10,000	10,000	< 29,500	29,500		5,000	5/31/2018	109-99-9
Toluene	< 2,500	2,500	< 9,425	9,425		5,000	5/31/2018	108-88-3
trans-1,2-Dichloroethene	< 2,500	2,500	< 9,900	9,900		5,000	5/31/2018	156-60-5
Trichloroethene	**60,300**	**2,500**	**323,800**	**13,430**		5,000	5/31/2018	79-01-6
Trichlorofluoromethane(F-11)	< 2,500	2,500	< 14,050	14,050		5,000	5/31/2018	75-69-4
Trichlorotrifluoroethane(F-113)	**18,600**	**2,500**	**142,500**	**19,150**		5,000	5/31/2018	76-13-1
Vinyl chloride	< 2,500	2,500	< 6,400	6,400		5,000	5/31/2018	75-01-4
Surr: 4-Bromofluorobenzene	99.8	70-130	%REC					

Airtech Environmental Laboratories (AEL) - AZ 0740

4620 E.Elwood St., Suite 13, Phoenix, AZ 85040 480-968-5888 Fax 480-966-1888

Client:	Wood	**Client Sample ID:**	N/A
Project:	Cave Creek Landfill	**Project Number:**	14-2017-2034
Lab Order:	18E015	**Collection:**	N/A
Lab ID:	Blank	**Matrix:**	Nitrogen

Method QC Data

Batch: MS010531 Analyst: JJ

Analyses	ppbv Result	ppbv Limit	ug/M^3 Result	ug/M^3 Limit	Qual	DF	Date Analyzed	CAS#
VOLATILE ORGANICS IN AIR		**TO-15**					Analyst: JJ	
1,1-Dichloroethane	< 0.5	0.5	< 2.03	2.03		1	5/31/2018	75-34-3
1,1-Dichloroethene	< 0.5	0.5	< 1.99	1.99		1	5/31/2018	75-35-4
1,2-Dichlorobenzene	< 0.5	0.5	< 3.01	3.01		1	5/31/2018	95-50-1
1,2-Dichloroethane	< 0.5	0.5	< 2.03	2.03		1	5/31/2018	107-06-2
2-Butanone (MEK)	< 5.0	5.0	< 14.8	14.8		1	5/31/2018	78-93-3
Acetone	< 5.0	5.0	< 11.9	11.9		1	5/31/2018	67-64-1
Benzene	< 0.5	0.5	< 1.60	1.60		1	5/31/2018	71-43-2
Chlorobenzene	< 0.5	0.5	< 2.30	2.30		1	5/31/2018	108-90-7
Chloroform	< 0.5	0.5	< 2.44	2.44		1	5/31/2018	67-66-3
cis-1,2-Dichloroethene	< 0.5	0.5	< 1.98	1.98		1	5/31/2018	156-59-2
Dichlorodifluoromethane(F-12)	< 1.0	1.0	< 4.95	4.95		1	5/31/2018	75-71-8
Ethylbenzene	< 0.5	0.5	< 2.17	2.17		1	5/31/2018	100-41-4
m&p-Xylene	< 1.0	1.0	< 4.34	4.34		1	5/31/2018	179601-23-1
Methylene chloride	< 2.0	2.0	< 6.94	6.94		1	5/31/2018	75-09-2
o-Xylene	< 0.5	0.5	< 2.17	2.17		1	5/31/2018	95-47-6
Tetrachloroethene	< 1.0	1.0	< 6.78	6.78		1	5/31/2018	127-18-4
Tetrahydrofuran	< 2.0	2.0	< 5.90	5.90		1	5/31/2018	109-99-9
Toluene	< 0.5	0.5	< 1.89	1.89		1	5/31/2018	108-88-3
trans-1,2-Dichloroethene	< 0.5	0.5	< 1.98	1.98		1	5/31/2018	156-60-5
Trichloroethene	< 0.5	0.5	< 2.69	2.69		1	5/31/2018	79-01-6
Trichlorofluoromethane(F-11)	< 0.5	0.5	< 2.81	2.81		1	5/31/2018	75-69-4
Trichlorotrifluoroethane(F-113)	< 0.5	0.5	< 3.83	3.83		1	5/31/2018	76-13-1
Vinyl chloride	< 0.5	0.5	< 1.28	1.28		1	5/31/2018	75-01-4
Surr: 4-Bromofluorobenzene	94.6	70-130	%REC					

Airtech Environmental Laboratories (AEL) - AZ 0740

4620 E.Elwood St., Suite 13, Phoenix, AZ 85040 480-968-5888 Fax 480-966-1888

Client:	Wood	**Client Sample ID:**	N/A
Project:	Cave Creek Landfill	**Project Number:**	14-2017-2034
Lab Order:	18E015	**Collection:**	N/A
Lab ID:	LCS/LCSD	**Matrix:**	Nitrogen

Method QC Data

Date Analyzed: 5/31/2018 Batch: MS010531 Analyst: JJ

Analyses	LCS Result	LCS %REC	LCSD Result	LCSD %REC	T.V.	%RPD	Unit	Qualifier LCS	Qualifier LCSD	Qualifier RPD
VOLATILE ORGANICS IN AIR	**TO-15**							70-130%		<25%
Dichlorodifluoromethane(F-12)	11.6	116	11.7	117	10.0	0.8	ppbv			
Vinyl Chloride	11.5	115	12.6	126	10.0	9.0	ppbv			
Trichlorofluoromethane (F-11)	12.2	122	11.3	113	10.0	7.3	ppbv			
Acetone	9.5	94.5	9.5	95.2	10.0	0.7	ppbv			
1,1-Dichloroethene	10.3	103	10.3	103	10.0	0.1	ppbv			
Trichlorotrifluoroethane (F-113)	11.0	110	10.4	104	10.0	6.1	ppbv			
Methylene Chloride	10.8	108	10.4	104	10.0	3.7	ppbv			
trans-1,2-Dichloroethene	9.1	91.2	9.3	92.8	10.0	1.7	ppbv			
1,1-Dichloroethane	10.2	102	10.1	101	10.0	0.9	ppbv			
2-Butanone (MEK)	9.0	89.6	8.6	86.1	10.0	4.0	ppbv			
cis-1,2-Dichloroethene	9.0	89.9	8.8	88.3	10.0	1.8	ppbv			
Chloroform	10.5	105	9.7	97.4	10.0	7.0	ppbv			
Tetrahydrofuran	9.7	96.8	10.0	99.5	10.0	2.8	ppbv			
1,2-Dichloroethane	11.1	111	10.5	105	10.0	5.1	ppbv			
Benzene	8.9	88.5	9.7	96.8	10.0	9.0	ppbv			
Trichloroethene	10.1	101	9.9	98.7	10.0	2.5	ppbv			
Toluene	9.5	94.9	9.2	91.8	10.0	3.3	ppbv			
Tetrachloroethene	10.3	103	10.1	101	10.0	2.2	ppbv			
Chlorobenzene	9.4	94.3	9.4	93.9	10.0	0.4	ppbv			
Ethylbenzene	9.2	92.2	9.4	94.0	10.0	1.9	ppbv			
m&p-Xylene	18.9	94.3	19.9	100	20.0	5.4	ppbv			
o-Xylene	9.7	97.3	10.2	102	10.0	4.5	ppbv			
1,2-Dichlorobenzene	9.5	94.9	9.1	90.8	10.0	4.4	ppbv			
Surr: 4-Bromofluorobenzene	11.1	111	11.0	110		0.9	%REC			
		70-130%		70-130%						

Airtech Environmental Laboratories (AEL) - AZ 0740

4620 E.Elwood St., Suite 13, Phoenix, AZ 85040 480-968-5888 Fax 480-966-1888

Client:	Wood	**Client Sample ID:**	NA
Project:	Cave Creek Landfill	**Project Number:**	14-2017-2034
Lab Order:	18E015	**Collection:**	NA
Lab ID:	Standards	**Matrix:**	Nitrogen

AEL ID#	STD Name	Vendor	SGI Order#	Description	CONC.	Accuracy	Exp.Date
S-170623-01	Stock	Spectra Gases	113123527	TO-14 39 Analytes	1.0 ppmv	± 5%	6/23/2018
S-170824-01	Stock	Spectra Gases	113123527	TO-15 25 Analytes	1.0 ppmv	± 5%	8/24/2018
S-170623-02	Stock	Spectra Gases	113123527	15 Additional Compounds	1.0 ppmv	± 5%	6/23/2018
S-171019-01	Stock	Spectra Gases	114560630	TO-15 IS 4 Compounds	1.0 ppmv	± 5%	10/19/2018
A-180515-01	Working Std	AEL Dilution		TO-15 74 Analytes	10 ppbv	± 5%	6/23/2018
A-180528-01	Working IS	AEL Dilution		TO-15 IS 4 Compounds	50 ppbv	± 5%	8/28/2018

Airtech Environmental Laboratories (AEL)

Chain of Custody

4620 E.Elwood Street, Suite 13, Phoenix, AZ 85040 480-968-5888 (phone) 480-966-1888 (fax)

Customer : Wood.	Page 1 of 1		AEL Lab #
Address: 4600 East Washington Street, Suite #600	Sampler: Eric Miller	Phone: (602) 300-8313	18E015
	Project Name: Cave Creek Landfill	Project Number: 14-2017-2034	
City, State, Zip: Phoenix, AZ 85034	Project location: Cave Creek, AZ		
Contact: ~~Emily Corkery~~ / Samantha Sargent NATALIE, CHRISMAN	P.O. Number:		
Phone: (602) 733-6000 Fax: (602) 733-6100	Fax Results: Y N		
E-Mail Address: ~~Emily.Corkery~~@amecfw.com	E-Mail Results: (Y) N		

Sample Receipt	Turn Around Request	Sample Type
Temperature_____ °C	____ 24 Hours ____ 48 Hours	SVE: soil vapor extraction GW: ground water
Custody Seals: Yes_____ No_____	____ 72 Hours	A: ambient air WW: waste water
Custody Seals Intact: Yes_____ No_____	____ 5 working Day	I: indoor air
Total # of Containers:_____	X Standard 10 Working Days	S: soil vapor
		W: water

Sample Information

AEL Lab #	Serial # Canister	Serial # Grab	Canister (L) or bag	Grab (Min)	Client's Sample Identification	Sampled Date	Sampled Time	Sample Type	Number of Containers	TO-15 full list	TO-15 TPH(GRO)	TO-15 Selet List	8260B AZ Vapor full list	8260B Vapor select list	8015 GRO	8260B Water			DFA tracer cmpd. as TIC
01	1798	048	6 (1) bag	(1) 2 5	SP4-H1-052318	5.23.18	1105	SVE	1			X							
02	E2095	085	6 (1) bag	(1) 2 5	SP3-C3-052318	↓	1110	↓	↓			X							
03	E2359	014	6 (1) bag	(1) 2 5	SP2-C2-052318	↓	1115	↓	↓			X							
04	1841	105	6 (1) bag	(1) 2 5	SP1-SKIDOUTLET-052318	↓	1120	↓	↓			X							
			6 1 bag	1 2 5															
			6 1 bag	1 2 5															
			6 1 bag	1 2 5															
			6 1 bag	1 2 5															
			6 1 bag	1 2 5															
			6 1 bag	1 2 5															

Instructions / Special Requirements:

Date:	Time:	Samples Relinquished By:	Received By:
5.23.18	1435	E Mill	James Jones - Airtech

Airtech Environmental Laboratories (AEL)
4620 E.Elwood St., Suite 13, Phoenix, AZ 85040 480-968-5888 Fax 480-966-1888

Date: June 30, 2018

Client:	Natalie Chrisman	Work Order #:	18F022
Company:	Wood	Project Name:	Cave Creek Landfill
Address:	4600 E Washington St, #600	Project Number:	14-2017-2034
	Phoenix, AZ 85034	Received Date:	6/14/2018

Dear Client:

Airtech Environmental Laboratories received twenty (20) samples for analysis.

All analyses met laboratory QA/QC with any exceptions addressed in the Case Narrative.

If you have any questions or concerns regarding your samples analysis, please contact the laboratory at 480-968-5888

Sincerely,

Yu Min Shi
Technical Director
Airtech Environmental Labs

Arizona ADHS License No. AZ0740

Airtech Environmental Laboratories (AEL)
4620 E.Elwood St., Suite 13, Phoenix, AZ 85040 480-968-5888 Fax 480-966-1888

Date: June 30, 2018

Client:	Natalie Chrisman	Work Order #:	18F022
Company:	Wood	Project Name:	Cave Creek Landfill
Address:	4600 E Washington St, #600	Project Number:	14-2017-2034
	Phoenix, AZ 85034	Received Date:	6/14/2018

SAMPLE SUMMARY

LAB ID	CLIENT ID	METHOD	SAMPLE DATE	SAMPLE TIME
18F022-01	MW-10-SG-060618	TO-15	6/6/2018	1101
18F022-02	MW-10S-SG-060618	TO-15	6/6/2018	1119
18F022-03	MW-10M-SG-060618	TO-15	6/6/2018	1146
18F022-04	MW-10D-SG-060618	TO-15	6/6/2018	1206
18F022-05	MW-9-SG-060818	TO-15	6/8/2018	856
18F022-06	MW-9S-SG-060818	TO-15	6/8/2018	914
18F022-07	MW-9M-SG-060818	TO-15	6/8/2018	937
18F022-08	MW-9D-SG-060818	TO-15	6/8/2018	1006
18F022-09	TSSV-3D-SG-061118	TO-15	6/11/2018	1006
18F022-10	TSSV-3PZ-SG-061118	TO-15	6/11/2018	1047
18F022-11	TSSV-5D-SG-061118	TO-15	6/11/2018	1206
18F022-12	TSSV-5PZ-SG-061118	TO-15	6/11/2018	1311
18F022-13	TSSV-6S-SG-061118	TO-15	6/13/2018	846
18F022-14	TSSV-6M-SG-061118	TO-15	6/13/2018	912
18F022-15	TSSV-6D-SG-061118	TO-15	6/13/2018	936
18F022-16	TSSV-7S-SG-061118	TO-15	6/13/2018	1036
18F022-17	TSSV-7M-SG-061118	TO-15	6/13/2018	1101
18F022-18	TSSV-7D-SG-061118	TO-15	6/13/2018	1124
18F022-19	TSSV-7PZ-SG-061118	TO-15	6/13/2018	1233
18F022-20	DUP01-061318	TO-15	6/13/2018	1315

Airtech Environmental Laboratories (AEL)
4620 E.Elwood St., Suite 13, Phoenix, AZ 85040 480-968-5888 Fax 480-966-1888

Date: June 30, 2018

Client:	Natalie Chrisman	Work Order #:	18F022
Company:	Wood	Project Name:	Cave Creek Landfill
Address:	4600 E Washington St, #600	Project Number:	14-2017-2034
	Phoenix, AZ 85034	Received Date:	06/14/18

Case Narrative

All samples and QC associated with your samples met the quality control objectives.
Data qualifiers in this report are in accordance with ADEQ Data Qualifiers.

Mass tune files of 6/21/2018 and 6/22/2018 data used short range BFB tune data.
Reports accuracy and integrity maintained.

Airtech Environmental Laboratories (AEL) - AZ 0740
4620 E.Elwood St., Suite 13, Phoenix, AZ 85040 480-968-5888 Fax 480-966-1888

Client:	Wood	**Client Sample ID:**	N/A
Project:	Cave Creek Landfill	**Project Number:**	14-2017-2034
Lab Order:	18F022	**Collection:**	N/A
Lab ID:	Kits QC	**Matrix:**	Air

		Canister				Grab Sampler	
		Type		Vacuum	Pressure	Type	
	Client	1.0 liter		before sampled	after sampled	1 minute-fill 1.0L canister	
AEL#	ID	SN#	Clean Batch#	Hg inch	psia	SN#	Clean Batch#
18F022-01	MW-10-SG-060618	E2287	1806-02	29.0	13.38	009	1803-13
18F022-02	MW-10S-SG-060618	E2407	1806-04	29.0	13.27	037	1803-09
18F022-03	MW-10M-SG-060618	E2366	1806-03	29.0	13.26	031	1803-09
18F022-04	MW-10D-SG-060618	1819	1806-03	29.0	13.26	207	1803-11
18F022-05	MW-9-SG-060818	E2289	1806-05	29.0	13.32	047	1803-09
18F022-06	MW-9S-SG-060818	E2363	1806-05	29.0	13.44	190	1803-09
18F022-07	MW-9M-SG-060818	E2360	1806-05	29.0	13.26	201	1803-09
18F022-08	MW-9D-SG-060818	E2374	1806-05	29.0	13.35	012	1803-09
18F022-09	TSSV-3D-SG-061118	E2350	1806-04	29.0	13.00	086	1803-09
18F022-10	TSSV-3PZ-SG-061118	E2372	1806-04	29.0	12.90	137	1803-09
18F022-11	TSSV-5D-SG-061118	E2283	1806-04	29.0	12.90	041	1803-09
18F022-12	TSSV-5PZ-SG-061118	E2281	1806-04	29.0	12.92	007	1803-09
18F022-13	TSSV-6S-SG-061118	1815	1806-02	29.0	13.30	117	1803-09
18F022-14	TSSV-6M-SG-061118	1807	1806-03	29.0	13.24	091	1803-11
18F022-15	TSSV-6D-SG-061118	1822	1806-03	29.0	13.14	092	1803-11
18F022-16	TSSV-7S-SG-061118	0265	1806-02	29.0	13.10	195	1803-07
18F022-17	TSSV-7M-SG-061118	1879	1806-02	29.0	13.22	198	1803-07
18F022-18	TSSV-7D-SG-061118	1856	1806-02	29.0	13.18	164	1803-07
18F022-19	TSSV-7PZ-SG-061118	1857	1806-02	29.0	13.02	024	1803-07
18F022-20	DUP01-061318	1863	1806-02	29.0	13.02	053	1803-07

Airtech Environmental Laboratories (AEL) - AZ 0740

4620 E.Elwood St., Suite 13, Phoenix, AZ 85040 480-968-5888 Fax 480-966-1888

Client:	Wood	**Client Sample ID:**	MW-10-SG-060618
Project:	Cave Creek Landfill	**Project Number:**	14-2017-2034
Lab Order:	18F022	**Collection:**	6/6/2018
Lab ID:	01	**Matrix:**	Soil vapor

	ppbv		ug/M^3				Date	
Analyses	**Result**	**Limit**	**Result**	**Limit**	**Qual**	**DF**	**Analyzed**	**CAS#**
VOLATILE ORGANICS IN AIR	**TO-15**						Analyst: JJ	
1,1-Dichloroethane	**1,400**	**100**	**5,670**	**405**		200	6/26/2018	75-34-3
1,1-Dichloroethene	**516**	**100**	**2,050**	**397**		200	6/26/2018	75-35-4
1,2-Dichlorobenzene	< 100	100	< 601	601		200	6/26/2018	95-50-1
1,2-Dichloroethane	< 100	100	< 405	405		200	6/26/2018	107-06-2
2-Butanone (MEK)	< 1,000	1,000	< 2,950	2,950		200	6/26/2018	78-93-3
Acetone	< 1,000	1,000	< 2,380	2,380		200	6/26/2018	67-64-1
Benzene	**150**	**100**	**479**	**319**		200	6/26/2018	71-43-2
Chlorobenzene	< 100	100	< 460	460		200	6/26/2018	108-90-7
Chloroform	< 100	100	< 488	488		200	6/26/2018	67-66-3
cis-1,2-Dichloroethene	< 100	100	< 396	396		200	6/26/2018	156-59-2
Dichlorodifluoromethane(F-12)	**4,580**	**200**	**22,700**	**990**		200	6/26/2018	75-71-8
Ethylbenzene	< 100	100	< 434	434		200	6/26/2018	100-41-4
m&p-Xylene	< 200	200	< 868	868		200	6/26/2018	179601-23-1
Methylene chloride	< 400	400	< 1,388	1,390		200	6/26/2018	75-09-2
o-Xylene	< 100	100	< 434	434		200	6/26/2018	95-47-6
Tetrachloroethene	**482**	**200**	**3,270**	**1,360**		200	6/26/2018	127-18-4
Tetrahydrofuran	< 400	400	< 1,180	1,180		200	6/26/2018	109-99-9
Toluene	**510**	**100**	**1,920**	**377**		200	6/26/2018	108-88-3
trans-1,2-Dichloroethene	< 100	100	< 396	396		200	6/26/2018	156-60-5
Trichloroethene	**2,030**	**100**	**10,900**	**537**		200	6/26/2018	79-01-6
Trichlorofluoromethane(F-11)	**2,650**	**100**	**14,900**	**562**		200	6/26/2018	75-69-4
Trichlorotrifluoroethane(F-113)	**440**	**100**	**3,370**	**766**		200	6/26/2018	76-13-1
Vinyl chloride	< 100	100	< 256	256		200	6/26/2018	75-01-4
Surr: 4-Bromofluorobenzene	96.0	70-130	%REC					

Airtech Environmental Laboratories (AEL) - AZ 0740

4620 E.Elwood St., Suite 13, Phoenix, AZ 85040 480-968-5888 Fax 480-966-1888

Client:	Wood	**Client Sample ID:**	MW-10S-SG-060618
Project:	Cave Creek Landfill	**Project Number:**	14-2017-2034
Lab Order:	18F022	**Collection:**	6/6/2018
Lab ID:	02	**Matrix:**	Soil vapor

	ppbv		ug/M^3				Date	
Analyses	**Result**	**Limit**	**Result**	**Limit**	**Qual**	**DF**	**Analyzed**	**CAS#**
VOLATILE ORGANICS IN AIR	**TO-15**						Analyst: JJ	
1,1-Dichloroethane	< 100	100	< 405	405		200	6/22/2018	75-34-3
1,1-Dichloroethene	< 100	100	< 397	397		200	6/22/2018	75-35-4
1,2-Dichlorobenzene	< 100	100	< 601	601		200	6/22/2018	95-50-1
1,2-Dichloroethane	< 100	100	< 405	405		200	6/22/2018	107-06-2
2-Butanone (MEK)	< 1,000	1,000	< 2,950	2,950		200	6/22/2018	78-93-3
Acetone	< 1,000	1,000	< 2,380	2,380		200	6/22/2018	67-64-1
Benzene	< 100	100	< 319	319		200	6/22/2018	71-43-2
Chlorobenzene	< 100	100	< 460	460		200	6/22/2018	108-90-7
Chloroform	< 100	100	< 488	488		200	6/22/2018	67-66-3
cis-1,2-Dichloroethene	< 100	100	< 396	396		200	6/22/2018	156-59-2
Dichlorodifluoromethane(F-12)	**5,750**	**200**	**28,500**	**990**		200	6/22/2018	75-71-8
Ethylbenzene	< 100	100	< 434	434		200	6/22/2018	100-41-4
m&p-Xylene	< 200	200	< 868	868		200	6/22/2018	179601-23-1
Methylene chloride	< 400	400	< 1,390	1,390		200	6/22/2018	75-09-2
o-Xylene	< 100	100	< 434	434		200	6/22/2018	95-47-6
Tetrachloroethene	**468**	**200**	**3,170**	**1,360**		200	6/22/2018	127-18-4
Tetrahydrofuran	< 400	400	< 1,180	1,180		200	6/22/2018	109-99-9
Toluene	< 100	100	< 377	377		200	6/22/2018	108-88-3
trans-1,2-Dichloroethene	< 100	100	< 396	396		200	6/22/2018	156-60-5
Trichloroethene	**108**	**100**	**580**	**537**		200	6/22/2018	79-01-6
Trichlorofluoromethane(F-11)	**1,440**	**100**	**8,090**	**562**		200	6/22/2018	75-69-4
Trichlorotrifluoroethane(F-113)	**326**	**100**	**2,500**	**766**		200	6/22/2018	76-13-1
Vinyl chloride	< 100	100	< 256	256		200	6/22/2018	75-01-4
Surr: 4-Bromofluorobenzene	95.1	70-130	%REC					

Airtech Environmental Laboratories (AEL) - AZ 0740

4620 E.Elwood St., Suite 13, Phoenix, AZ 85040 480-968-5888 Fax 480-966-1888

Client:	Wood	**Client Sample ID:**	MW-10M-SG-060618
Project:	Cave Creek Landfill	**Project Number:**	14-2017-2034
Lab Order:	18F022	**Collection:**	6/6/2018
Lab ID:	03	**Matrix:**	Soil vapor

	ppbv		ug/M^3				Date	
Analyses	**Result**	**Limit**	**Result**	**Limit**	**Qual**	**DF**	**Analyzed**	**CAS#**
VOLATILE ORGANICS IN AIR	**TO-15**						Analyst: JJ	
1,1-Dichloroethane	**692**	**100**	**2,800**	**405**		200	6/22/2018	75-34-3
1,1-Dichloroethene	**392**	**100**	**1,560**	**397**		200	6/22/2018	75-35-4
1,2-Dichlorobenzene	< 100	100	< 601	601		200	6/22/2018	95-50-1
1,2-Dichloroethane	< 100	100	< 405	405		200	6/22/2018	107-06-2
2-Butanone (MEK)	< 1,000	1,000	< 2,950	2,950		200	6/22/2018	78-93-3
Acetone	< 1,000	1,000	< 2,380	2,380		200	6/22/2018	67-64-1
Benzene	< 100	100	< 319	319		200	6/22/2018	71-43-2
Chlorobenzene	< 100	100	< 460	460		200	6/22/2018	108-90-7
Chloroform	< 100	100	< 488	488		200	6/22/2018	67-66-3
cis-1,2-Dichloroethene	**124**	**100**	**491**	**396**		200	6/22/2018	156-59-2
Dichlorodifluoromethane(F-12)	**7,260**	**200**	**35,900**	**990**		200	6/22/2018	75-71-8
Ethylbenzene	< 100	100	< 434	434		200	6/22/2018	100-41-4
m&p-Xylene	< 200	200	< 868	868		200	6/22/2018	179601-23-1
Methylene chloride	**640**	**400**	**2,220**	**1,390**		200	6/22/2018	75-09-2
o-Xylene	< 100	100	< 434	434		200	6/22/2018	95-47-6
Tetrachloroethene	**802**	**200**	**5,440**	**1,360**		200	6/22/2018	127-18-4
Tetrahydrofuran	< 400	400	< 1,180	1,180		200	6/22/2018	109-99-9
Toluene	< 100	100	< 377	377		200	6/22/2018	108-88-3
trans-1,2-Dichloroethene	< 100	100	< 396	396		200	6/22/2018	156-60-5
Trichloroethene	**196**	**100**	**1,050**	**537**		200	6/22/2018	79-01-6
Trichlorofluoromethane(F-11)	**1,790**	**100**	**10,100**	**562**		200	6/22/2018	75-69-4
Trichlorotrifluoroethane(F-113)	**328**	**100**	**2,510**	**766**		200	6/22/2018	76-13-1
Vinyl chloride	< 100	100	< 256	256		200	6/22/2018	75-01-4
Surr: 4-Bromofluorobenzene	95.8	70-130	%REC					

Airtech Environmental Laboratories (AEL) - AZ 0740

4620 E.Elwood St., Suite 13, Phoenix, AZ 85040 480-968-5888 Fax 480-966-1888

Client:	Wood	**Client Sample ID:**	MW-10D-SG-060618
Project:	Cave Creek Landfill	**Project Number:**	14-2017-2034
Lab Order:	18F022	**Collection:**	6/6/2018
Lab ID:	04	**Matrix:**	Soil vapor

	ppbv		ug/M^3				Date	
Analyses	**Result**	**Limit**	**Result**	**Limit**	**Qual**	**DF**	**Analyzed**	**CAS#**
VOLATILE ORGANICS IN AIR	**TO-15**						Analyst: JJ	
1,1-Dichloroethane	**1,840**	**100**	**7,450**	**405**		200	6/22/2018	75-34-3
1,1-Dichloroethene	**392**	**100**	**1,560**	**397**		200	6/22/2018	75-35-4
1,2-Dichlorobenzene	< 100	100	< 601	601		200	6/22/2018	95-50-1
1,2-Dichloroethane	< 100	100	< 405	405		200	6/22/2018	107-06-2
2-Butanone (MEK)	< 1,000	1,000	< 2,950	2,950		200	6/22/2018	78-93-3
Acetone	< 1,000	1,000	< 2,380	2,380		200	6/22/2018	67-64-1
Benzene	**136**	**100**	**434**	**319**		200	6/22/2018	71-43-2
Chlorobenzene	< 100	100	< 460	460		200	6/22/2018	108-90-7
Chloroform	< 100	100	< 488	488		200	6/22/2018	67-66-3
cis-1,2-Dichloroethene	< 100	100	< 396	396		200	6/22/2018	156-59-2
Dichlorodifluoromethane(F-12)	**6,290**	**200**	**31,100**	**990**		200	6/22/2018	75-71-8
Ethylbenzene	**114**	**100**	**495**	**434**		200	6/22/2018	100-41-4
m&p-Xylene	< 200	200	< 868	868		200	6/22/2018	179601-23-1
Methylene chloride	< 400	400	< 1,388	1,390		200	6/22/2018	75-09-2
o-Xylene	< 100	100	< 434	434		200	6/22/2018	95-47-6
Tetrachloroethene	**1,120**	**200**	**7,590**	**1,360**		200	6/22/2018	127-18-4
Tetrahydrofuran	< 400	400	< 1,180	1,180		200	6/22/2018	109-99-9
Toluene	**720**	**100**	**2,710**	**377**		200	6/22/2018	108-88-3
trans-1,2-Dichloroethene	< 100	100	< 396	396		200	6/22/2018	156-60-5
Trichloroethene	**840**	**100**	**4,510**	**537**		200	6/22/2018	79-01-6
Trichlorofluoromethane(F-11)	**2,320**	**100**	**13,000**	**562**		200	6/22/2018	75-69-4
Trichlorotrifluoroethane(F-113)	**314**	**100**	**2,410**	**766**		200	6/22/2018	76-13-1
Vinyl chloride	< 100	100	< 256	256		200	6/22/2018	75-01-4
Surr: 4-Bromofluorobenzene	90.2	70-130	%REC					

Airtech Environmental Laboratories (AEL) - AZ 0740

4620 E.Elwood St., Suite 13, Phoenix, AZ 85040 480-968-5888 Fax 480-966-1888

Client:	Wood	**Client Sample ID:**	MW-9-SG-060818
Project:	Cave Creek Landfill	**Project Number:**	14-2017-2034
Lab Order:	18F022	**Collection:**	6/8/2018
Lab ID:	05	**Matrix:**	Soil vapor

	ppbv		ug/M^3				Date	
Analyses	**Result**	**Limit**	**Result**	**Limit**	**Qual**	**DF**	**Analyzed**	**CAS#**
VOLATILE ORGANICS IN AIR	**TO-15**						Analyst: JJ	
1,1-Dichloroethane	< 500	500	< 2,030	2,030		1,000	6/21/2018	75-34-3
1,1-Dichloroethene	**3,010**	**500**	**12,000**	**1,990**		1,000	6/21/2018	75-35-4
1,2-Dichlorobenzene	< 500	500	< 3,010	3,010		1,000	6/21/2018	95-50-1
1,2-Dichloroethane	< 500	500	< 2,030	2,030		1,000	6/21/2018	107-06-2
2-Butanone (MEK)	< 5,000	5,000	< 14,800	14,800		1,000	6/21/2018	78-93-3
Acetone	< 5,000	5,000	< 11,900	11,900		1,000	6/21/2018	67-64-1
Benzene	< 500	500	< 1,600	1,600		1,000	6/21/2018	71-43-2
Chlorobenzene	< 500	500	< 2,300	2,300		1,000	6/21/2018	108-90-7
Chloroform	< 500	500	< 2,440	2,440		1,000	6/21/2018	67-66-3
cis-1,2-Dichloroethene	**1,290**	**500**	**5,110**	**1,980**		1,000	6/21/2018	156-59-2
Dichlorodifluoromethane(F-12)	< 1,000	1,000	< 4,950	4,950		1,000	6/21/2018	75-71-8
Ethylbenzene	< 500	500	< 2,170	2,170		1,000	6/21/2018	100-41-4
m&p-Xylene	< 1,000	1,000	< 4,340	4,340		1,000	6/21/2018	179601-23-1
Methylene chloride	< 2,000	2,000	< 6,940	6,940		1,000	6/21/2018	75-09-2
o-Xylene	< 500	500	< 2,170	2,170		1,000	6/21/2018	95-47-6
Tetrachloroethene	**3,860**	**1,000**	**26,200**	**6,780**		1,000	6/21/2018	127-18-4
Tetrahydrofuran	< 2,000	2,000	< 5,900	5,900		1,000	6/21/2018	109-99-9
Toluene	< 500	500	< 1,890	1,890		1,000	6/21/2018	108-88-3
trans-1,2-Dichloroethene	< 500	500	< 1,980	1,980		1,000	6/21/2018	156-60-5
Trichloroethene	**188,000**	**2,500**	**1,010,000**	**13,400**		5,000	6/23/2018	79-01-6
Trichlorofluoromethane(F-11)	< 500	500	< 2,810	2,810		1,000	6/21/2018	75-69-4
Trichlorotrifluoroethane(F-113)	**5,950**	**500**	**45,600**	**3,830**		1,000	6/21/2018	76-13-1
Vinyl chloride	< 500	500	< 1,280	1,280		1,000	6/21/2018	75-01-4
Surr: 4-Bromofluorobenzene	91.6	70-130	%REC					

Airtech Environmental Laboratories (AEL) - AZ 0740

4620 E.Elwood St., Suite 13, Phoenix, AZ 85040 480-968-5888 Fax 480-966-1888

Client:	Wood	**Client Sample ID:**	MW-9S-SG-060818
Project:	Cave Creek Landfill	**Project Number:**	14-2017-2034
Lab Order:	18F022	**Collection:**	6/8/2018
Lab ID:	06	**Matrix:**	Soil vapor

	ppbv		ug/M^3				Date	
Analyses	**Result**	**Limit**	**Result**	**Limit**	**Qual**	**DF**	**Analyzed**	**CAS#**
VOLATILE ORGANICS IN AIR	**TO-15**						Analyst: JJ	
1,1-Dichloroethane	< 500	500	< 2,030	2,030		1,000	6/21/2018	75-34-3
1,1-Dichloroethene	< 500	500	< 1,990	1,990		1,000	6/21/2018	75-35-4
1,2-Dichlorobenzene	< 500	500	< 3,010	3,010		1,000	6/21/2018	95-50-1
1,2-Dichloroethane	< 500	500	< 2,030	2,030		1,000	6/21/2018	107-06-2
2-Butanone (MEK)	< 5,000	5,000	< 14,800	14,800		1,000	6/21/2018	78-93-3
Acetone	< 5,000	5,000	< 11,900	11,900		1,000	6/21/2018	67-64-1
Benzene	< 500	500	< 1,600	1,600		1,000	6/21/2018	71-43-2
Chlorobenzene	< 500	500	< 2,300	2,300		1,000	6/21/2018	108-90-7
Chloroform	< 500	500	< 2,440	2,440		1,000	6/21/2018	67-66-3
cis-1,2-Dichloroethene	< 500	500	< 1,980	1,980		1,000	6/21/2018	156-59-2
Dichlorodifluoromethane(F-12)	< 1,000	1,000	< 4,950	4,950		1,000	6/21/2018	75-71-8
Ethylbenzene	< 500	500	< 2,170	2,170		1,000	6/21/2018	100-41-4
m&p-Xylene	< 1,000	1,000	< 4,340	4,340		1,000	6/21/2018	179601-23-1
Methylene chloride	< 2,000	2,000	< 6,940	6,940		1,000	6/21/2018	75-09-2
o-Xylene	< 500	500	< 2,170	2,170		1,000	6/21/2018	95-47-6
Tetrachloroethene	**5,330**	**1,000**	**36,100**	**6,780**		1,000	6/21/2018	127-18-4
Tetrahydrofuran	< 2,000	2,000	< 5,900	5,900		1,000	6/21/2018	109-99-9
Toluene	< 500	500	< 1,890	1,890		1,000	6/21/2018	108-88-3
trans-1,2-Dichloroethene	< 500	500	< 1,980	1,980		1,000	6/21/2018	156-60-5
Trichloroethene	**1,150**	**500**	**6,180**	**2,690**		1,000	6/21/2018	79-01-6
Trichlorofluoromethane(F-11)	< 500	500	< 2,810	2,810		1,000	6/21/2018	75-69-4
Trichlorotrifluoroethane(F-113)	< 500	500	< 3,830	3,830		1,000	6/21/2018	76-13-1
Vinyl chloride	< 500	500	< 1,280	1,280		1,000	6/21/2018	75-01-4
Surr: 4-Bromofluorobenzene	93.7	70-130	%REC					

Airtech Environmental Laboratories (AEL) - AZ 0740

4620 E.Elwood St., Suite 13, Phoenix, AZ 85040 480-968-5888 Fax 480-966-1888

Client:	Wood	**Client Sample ID:**	MW-9M-SG-060818
Project:	Cave Creek Landfill	**Project Number:**	14-2017-2034
Lab Order:	18F022	**Collection:**	6/8/2018
Lab ID:	07	**Matrix:**	Soil vapor

	ppbv		ug/M^3				Date	
Analyses	**Result**	**Limit**	**Result**	**Limit**	**Qual**	**DF**	**Analyzed**	**CAS#**
VOLATILE ORGANICS IN AIR	**TO-15**						Analyst: JJ	
1,1-Dichloroethane	**102**	**100**	**413**	**405**		200	6/22/2018	75-34-3
1,1-Dichloroethene	< 100	100	< 397	397		200	6/22/2018	75-35-4
1,2-Dichlorobenzene	< 100	100	< 601	601		200	6/22/2018	95-50-1
1,2-Dichloroethane	< 100	100	< 405	405		200	6/22/2018	107-06-2
2-Butanone (MEK)	< 1,000	1,000	< 2,950	2,950		200	6/22/2018	78-93-3
Acetone	< 1,000	1,000	< 2,380	2,380		200	6/22/2018	67-64-1
Benzene	< 100	100	< 319	319		200	6/22/2018	71-43-2
Chlorobenzene	< 100	100	< 460	460		200	6/22/2018	108-90-7
Chloroform	< 100	100	< 488	488		200	6/22/2018	67-66-3
cis-1,2-Dichloroethene	< 100	100	< 396	396		200	6/22/2018	156-59-2
Dichlorodifluoromethane(F-12)	**612**	**200**	**3,030**	**990**		200	6/22/2018	75-71-8
Ethylbenzene	< 100	100	< 434	434		200	6/22/2018	100-41-4
m&p-Xylene	< 200	200	< 868	868		200	6/22/2018	179601-23-1
Methylene chloride	< 400	400	< 1,388	1,390		200	6/22/2018	75-09-2
o-Xylene	< 100	100	< 434	434		200	6/22/2018	95-47-6
Tetrachloroethene	**950**	**200**	**6,440**	**1,360**		200	6/22/2018	127-18-4
Tetrahydrofuran	< 400	400	< 1,180	1,180		200	6/22/2018	109-99-9
Toluene	< 100	100	< 377	377		200	6/22/2018	108-88-3
trans-1,2-Dichloroethene	< 100	100	< 396	396		200	6/22/2018	156-60-5
Trichloroethene	**568**	**100**	**3,050**	**537**		200	6/22/2018	79-01-6
Trichlorofluoromethane(F-11)	**450**	**100**	**2,530**	**562**		200	6/22/2018	75-69-4
Trichlorotrifluoroethane(F-113)	**1,760**	**100**	**13,500**	**766**		200	6/22/2018	76-13-1
Vinyl chloride	< 100	100	< 256	256		200	6/22/2018	75-01-4
Surr: 4-Bromofluorobenzene	94.9	70-130	%REC					

Airtech Environmental Laboratories (AEL) - AZ 0740

4620 E.Elwood St., Suite 13, Phoenix, AZ 85040 480-968-5888 Fax 480-966-1888

Client:	Wood	**Client Sample ID:**	MW-9D-SG-060818
Project:	Cave Creek Landfill	**Project Number:**	14-2017-2034
Lab Order:	18F022	**Collection:**	6/8/2018
Lab ID:	08	**Matrix:**	Soil vapor

	ppbv		ug/M^3				Date	
Analyses	**Result**	**Limit**	**Result**	**Limit**	**Qual**	**DF**	**Analyzed**	**CAS#**
VOLATILE ORGANICS IN AIR	**TO-15**						Analyst: JJ	
1,1-Dichloroethane	< 100	100	< 405	405		200	6/22/2018	75-34-3
1,1-Dichloroethene	< 100	100	< 397	397		200	6/22/2018	75-35-4
1,2-Dichlorobenzene	< 100	100	< 601	601		200	6/22/2018	95-50-1
1,2-Dichloroethane	< 100	100	< 405	405		200	6/22/2018	107-06-2
2-Butanone (MEK)	< 1,000	1,000	< 2,950	2,950		200	6/22/2018	78-93-3
Acetone	< 1,000	1,000	< 2,380	2,380		200	6/22/2018	67-64-1
Benzene	< 100	100	< 319	319		200	6/22/2018	71-43-2
Chlorobenzene	< 100	100	< 460	460		200	6/22/2018	108-90-7
Chloroform	< 100	100	< 488	488		200	6/22/2018	67-66-3
cis-1,2-Dichloroethene	< 100	100	< 396	396		200	6/22/2018	156-59-2
Dichlorodifluoromethane(F-12)	< 200	200	< 990	990		200	6/22/2018	75-71-8
Ethylbenzene	< 100	100	< 434	434		200	6/22/2018	100-41-4
m&p-Xylene	< 200	200	< 868	868		200	6/22/2018	179601-23-1
Methylene chloride	< 400	400	< 1,390	1,390		200	6/22/2018	75-09-2
o-Xylene	< 100	100	< 434	434		200	6/22/2018	95-47-6
Tetrachloroethene	**322**	**200**	**2,180**	**1,360**		200	6/22/2018	127-18-4
Tetrahydrofuran	< 400	400	< 1,180	1,180		200	6/22/2018	109-99-9
Toluene	< 100	100	< 377	377		200	6/22/2018	108-88-3
trans-1,2-Dichloroethene	< 100	100	< 396	396		200	6/22/2018	156-60-5
Trichloroethene	**3,630**	**100**	**19,500**	**537**		200	6/22/2018	79-01-6
Trichlorofluoromethane(F-11)	< 100	100	< 562	562		200	6/22/2018	75-69-4
Trichlorotrifluoroethane(F-113)	**2,810**	**100**	**21,500**	**766**		200	6/22/2018	76-13-1
Vinyl chloride	< 100	100	< 256	256		200	6/22/2018	75-01-4
Surr: 4-Bromofluorobenzene	89.7	70-130	%REC					

Airtech Environmental Laboratories (AEL) - AZ 0740

4620 E.Elwood St., Suite 13, Phoenix, AZ 85040 480-968-5888 Fax 480-966-1888

Client:	Wood	**Client Sample ID:**	TSSV-3D-SG-061118
Project:	Cave Creek Landfill	**Project Number:**	14-2017-2034
Lab Order:	18F022	**Collection:**	6/11/2018
Lab ID:	09	**Matrix:**	Soil vapor

	ppbv		ug/M^3				Date	
Analyses	**Result**	**Limit**	**Result**	**Limit**	**Qual**	**DF**	**Analyzed**	**CAS#**
VOLATILE ORGANICS IN AIR		**TO-15**					Analyst: JJ	
1,1-Dichloroethane	**21**	**10**	**86.7**	**40.5**		20	6/23/2018	75-34-3
1,1-Dichloroethene	< 10	10	< 39.7	39.7		20	6/23/2018	75-35-4
1,2-Dichlorobenzene	< 10	10	< 60.1	60.1		20	6/23/2018	95-50-1
1,2-Dichloroethane	< 10	10	< 40.5	40.5		20	6/23/2018	107-06-2
2-Butanone (MEK)	< 100	100	< 295	295		20	6/23/2018	78-93-3
Acetone	< 100	100	< 238	238		20	6/23/2018	67-64-1
Benzene	**24**	**10**	**76.6**	**31.9**		20	6/23/2018	71-43-2
Chlorobenzene	< 10	10	< 46.0	46.0		20	6/23/2018	108-90-7
Chloroform	< 10	10	< 48.8	48.8		20	6/23/2018	67-66-3
cis-1,2-Dichloroethene	< 10	10	< 39.6	39.6		20	6/23/2018	156-59-2
Dichlorodifluoromethane(F-12)	**66**	**20**	**325**	**99.0**		20	6/23/2018	75-71-8
Ethylbenzene	< 10	10	< 43.4	43.4		20	6/23/2018	100-41-4
m&p-Xylene	< 20	20	< 86.8	86.8		20	6/23/2018	179601-23-1
Methylene chloride	< 40	40	< 139	139		20	6/23/2018	75-09-2
o-Xylene	< 10	10	< 43.4	43.4		20	6/23/2018	95-47-6
Tetrachloroethene	**45**	**20**	**302**	**136**		20	6/23/2018	127-18-4
Tetrahydrofuran	< 40	40	< 118	118		20	6/23/2018	109-99-9
Toluene	< 10	10	< 37.7	37.7		20	6/23/2018	108-88-3
trans-1,2-Dichloroethene	< 10	10	< 39.6	39.6		20	6/23/2018	156-60-5
Trichloroethene	**125**	**10**	**670**	**53.7**		20	6/23/2018	79-01-6
Trichlorofluoromethane(F-11)	**17**	**10**	**94.4**	**56.2**		20	6/23/2018	75-69-4
Trichlorotrifluoroethane(F-113)	**13**	**10**	**98.0**	**76.6**		20	6/23/2018	76-13-1
Vinyl chloride	< 10	10	< 25.6	25.6		20	6/23/2018	75-01-4
Surr: 4-Bromofluorobenzene	94.9	70-130	%REC					

Airtech Environmental Laboratories (AEL) - AZ 0740

4620 E.Elwood St., Suite 13, Phoenix, AZ 85040 480-968-5888 Fax 480-966-1888

Client:	Wood	**Client Sample ID:**	TSSV-3PZ-SG-061118
Project:	Cave Creek Landfill	**Project Number:**	14-2017-2034
Lab Order:	18F022	**Collection:**	6/11/2018
Lab ID:	10	**Matrix:**	Soil vapor

	ppbv		ug/M^3				Date	
Analyses	**Result**	**Limit**	**Result**	**Limit**	**Qual**	**DF**	**Analyzed**	**CAS#**
VOLATILE ORGANICS IN AIR	**TO-15**						Analyst: JJ	
1,1-Dichloroethane	**216**	**100**	**875**	**405**		200	6/22/2018	75-34-3
1,1-Dichloroethene	< 100	100	< 397	397		200	6/22/2018	75-35-4
1,2-Dichlorobenzene	< 100	100	< 601	601		200	6/22/2018	95-50-1
1,2-Dichloroethane	< 100	100	< 405	405		200	6/22/2018	107-06-2
2-Butanone (MEK)	< 1,000	1,000	< 2,950	2,950		200	6/22/2018	78-93-3
Acetone	< 1,000	1,000	< 2,380	2,380		200	6/22/2018	67-64-1
Benzene	< 100	100	< 319	319		200	6/22/2018	71-43-2
Chlorobenzene	< 100	100	< 460	460		200	6/22/2018	108-90-7
Chloroform	< 100	100	< 488	488		200	6/22/2018	67-66-3
cis-1,2-Dichloroethene	< 100	100	< 396	396		200	6/22/2018	156-59-2
Dichlorodifluoromethane(F-12)	**2,880**	**200**	**14,300**	**990**		200	6/22/2018	75-71-8
Ethylbenzene	< 100	100	< 434	434		200	6/22/2018	100-41-4
m&p-Xylene	< 200	200	< 868	868		200	6/22/2018	179601-23-1
Methylene chloride	< 400	400	< 1,390	1,390		200	6/22/2018	75-09-2
o-Xylene	< 100	100	< 434	434		200	6/22/2018	95-47-6
Tetrachloroethene	**498**	**200**	**3,380**	**1,360**		200	6/22/2018	127-18-4
Tetrahydrofuran	< 400	400	< 1,180	1,180		200	6/22/2018	109-99-9
Toluene	< 100	100	< 377	377		200	6/22/2018	108-88-3
trans-1,2-Dichloroethene	< 100	100	< 396	396		200	6/22/2018	156-60-5
Trichloroethene	**4,060**	**100**	**21,800**	**537**		200	6/22/2018	79-01-6
Trichlorofluoromethane(F-11)	**1,540**	**100**	**8,660**	**562**		200	6/22/2018	75-69-4
Trichlorotrifluoroethane(F-113)	**550**	**100**	**4,210**	**766**		200	6/22/2018	76-13-1
Vinyl chloride	< 100	100	< 256	256		200	6/22/2018	75-01-4
Surr: 4-Bromofluorobenzene	91.5	70-130	%REC					

Airtech Environmental Laboratories (AEL) - AZ 0740

4620 E.Elwood St., Suite 13, Phoenix, AZ 85040 480-968-5888 Fax 480-966-1888

Client:	Wood	**Client Sample ID:**	TSSV-5D-SG-061118
Project:	Cave Creek Landfill	**Project Number:**	14-2017-2034
Lab Order:	18F022	**Collection:**	6/11/2018
Lab ID:	11	**Matrix:**	Soil vapor

	ppbv		ug/M^3				Date	
Analyses	**Result**	**Limit**	**Result**	**Limit**	**Qual**	**DF**	**Analyzed**	**CAS#**
VOLATILE ORGANICS IN AIR	**TO-15**						Analyst: JJ	
1,1-Dichloroethane	**164**	**50**	**664**	**203**		100	6/22/2018	75-34-3
1,1-Dichloroethene	< 50	50	< 199	199		100	6/22/2018	75-35-4
1,2-Dichlorobenzene	< 50	50	< 301	301		100	6/22/2018	95-50-1
1,2-Dichloroethane	< 50	50	< 203	203		100	6/22/2018	107-06-2
2-Butanone (MEK)	< 500	500	< 1,480	1,480		100	6/22/2018	78-93-3
Acetone	< 500	500	< 1,190	1,190		100	6/22/2018	67-64-1
Benzene	< 50	50	< 160	160		100	6/22/2018	71-43-2
Chlorobenzene	< 50	50	< 230	230		100	6/22/2018	108-90-7
Chloroform	< 50	50	< 244	244		100	6/22/2018	67-66-3
cis-1,2-Dichloroethene	< 50	50	< 198	198		100	6/22/2018	156-59-2
Dichlorodifluoromethane(F-12)	**3,110**	**100**	**15,400**	**495**		100	6/22/2018	75-71-8
Ethylbenzene	< 50	50	< 217	217		100	6/22/2018	100-41-4
m&p-Xylene	< 100	100	< 434	434		100	6/22/2018	179601-23-1
Methylene chloride	< 200	200	< 694	694		100	6/22/2018	75-09-2
o-Xylene	< 50	50	< 217	217		100	6/22/2018	95-47-6
Tetrachloroethene	**435**	**100**	**2,950**	**678**		100	6/22/2018	127-18-4
Tetrahydrofuran	< 200	200	< 590	590		100	6/22/2018	109-99-9
Toluene	**71**	**50**	**268**	**189**		100	6/22/2018	108-88-3
trans-1,2-Dichloroethene	< 50	50	< 198	198		100	6/22/2018	156-60-5
Trichloroethene	**266**	**50**	**1,430**	**269**		100	6/22/2018	79-01-6
Trichlorofluoromethane(F-11)	**1,390**	**50**	**7,810**	**281**		100	6/22/2018	75-69-4
Trichlorotrifluoroethane(F-113)	**253**	**50**	**1,940**	**383**		100	6/22/2018	76-13-1
Vinyl chloride	< 50	50	< 128	128		100	6/22/2018	75-01-4
Surr: 4-Bromofluorobenzene	96.2	70-130	%REC					

Airtech Environmental Laboratories (AEL) - AZ 0740

4620 E.Elwood St., Suite 13, Phoenix, AZ 85040 480-968-5888 Fax 480-966-1888

Client:	Wood	**Client Sample ID:**	TSSV-5PZ-SG-061118
Project:	Cave Creek Landfill	**Project Number:**	14-2017-2034
Lab Order:	18F022	**Collection:**	6/11/2018
Lab ID:	12	**Matrix:**	Soil vapor

	ppbv		ug/M^3				Date	
Analyses	**Result**	**Limit**	**Result**	**Limit**	**Qual**	**DF**	**Analyzed**	**CAS#**
VOLATILE ORGANICS IN AIR	**TO-15**						Analyst: JJ	
1,1-Dichloroethane	< 2,500	2,500	< 10,100	10,100		5,000	6/22/2018	75-34-3
1,1-Dichloroethene	< 2,500	2,500	< 9,930	9,930		5,000	6/22/2018	75-35-4
1,2-Dichlorobenzene	< 2,500	2,500	< 15,000	15,000		5,000	6/22/2018	95-50-1
1,2-Dichloroethane	< 2,500	2,500	< 10,100	10,100		5,000	6/22/2018	107-06-2
2-Butanone (MEK)	< 25,000	25,000	< 73,800	73,800		5,000	6/22/2018	78-93-3
Acetone	< 25,000	25,000	< 59,500	59,500		5,000	6/22/2018	67-64-1
Benzene	< 2,500	2,500	< 7,980	7,980		5,000	6/22/2018	71-43-2
Chlorobenzene	< 2,500	2,500	< 11,500	11,500		5,000	6/22/2018	108-90-7
Chloroform	< 2,500	2,500	< 12,200	12,200		5,000	6/22/2018	67-66-3
cis-1,2-Dichloroethene	< 2,500	2,500	< 9,900	9,900		5,000	6/22/2018	156-59-2
Dichlorodifluoromethane(F-12)	< 5,000	5,000	< 24,800	24,800		5,000	6/22/2018	75-71-8
Ethylbenzene	< 2,500	2,500	< 10,900	10,900		5,000	6/22/2018	100-41-4
m&p-Xylene	< 5,000	5,000	< 21,700	21,700		5,000	6/22/2018	179601-23-1
Methylene chloride	< 10,000	10,000	< 34,700	34,700		5,000	6/22/2018	75-09-2
o-Xylene	< 2,500	2,500	< 10,900	10,900		5,000	6/22/2018	95-47-6
Tetrachloroethene	< 5,000	5,000	< 33,900	33,900		5,000	6/22/2018	127-18-4
Tetrahydrofuran	< 10,000	10,000	< 29,500	29,500		5,000	6/22/2018	109-99-9
Toluene	< 2,500	2,500	< 9,430	9,430		5,000	6/22/2018	108-88-3
trans-1,2-Dichloroethene	< 2,500	2,500	< 9,900	9,900		5,000	6/22/2018	156-60-5
Trichloroethene	**58,300**	**2,500**	**313,000**	**13,400**		5,000	6/22/2018	79-01-6
Trichlorofluoromethane(F-11)	< 2,500	2,500	< 14,100	14,100		5,000	6/22/2018	75-69-4
Trichlorotrifluoroethane(F-113)	< 2,500	2,500	< 19,200	19,200		5,000	6/22/2018	76-13-1
Vinyl chloride	< 2,500	2,500	< 6,400	6,400		5,000	6/22/2018	75-01-4
Surr: 4-Bromofluorobenzene	96.9	70-130	%REC					

Airtech Environmental Laboratories (AEL) - AZ 0740

4620 E.Elwood St., Suite 13, Phoenix, AZ 85040 480-968-5888 Fax 480-966-1888

Client:	Wood	**Client Sample ID:**	TSSV-6S-SG-061118
Project:	Cave Creek Landfill	**Project Number:**	14-2017-2034
Lab Order:	18F022	**Collection:**	6/13/2018
Lab ID:	13	**Matrix:**	Soil vapor

	ppbv		ug/M^3				Date	
Analyses	**Result**	**Limit**	**Result**	**Limit**	**Qual**	**DF**	**Analyzed**	**CAS#**
VOLATILE ORGANICS IN AIR		**TO-15**					Analyst: JJ	
1,1-Dichloroethane	< 10	10	< 40.5	40.5		20	6/23/2018	75-34-3
1,1-Dichloroethene	< 10	10	< 39.7	39.7		20	6/23/2018	75-35-4
1,2-Dichlorobenzene	< 10	10	< 60.1	60.1		20	6/23/2018	95-50-1
1,2-Dichloroethane	< 10	10	< 40.5	40.5		20	6/23/2018	107-06-2
2-Butanone (MEK)	< 100	100	< 295	295		20	6/23/2018	78-93-3
Acetone	< 100	100	< 238	238		20	6/23/2018	67-64-1
Benzene	< 10	10	< 31.9	31.9		20	6/23/2018	71-43-2
Chlorobenzene	< 10	10	< 46.0	46.0		20	6/23/2018	108-90-7
Chloroform	< 10	10	< 48.8	48.8		20	6/23/2018	67-66-3
cis-1,2-Dichloroethene	< 10	10	< 39.6	39.6		20	6/23/2018	156-59-2
Dichlorodifluoromethane(F-12)	< 20	20	< 99.0	99.0		20	6/23/2018	75-71-8
Ethylbenzene	< 10	10	< 43.4	43.4		20	6/23/2018	100-41-4
m&p-Xylene	< 20	20	< 86.8	86.8		20	6/23/2018	179601-23-1
Methylene chloride	< 40	40	< 139	139		20	6/23/2018	75-09-2
o-Xylene	< 10	10	< 43.4	43.4		20	6/23/2018	95-47-6
Tetrachloroethene	< 20	20	< 136	136		20	6/23/2018	127-18-4
Tetrahydrofuran	< 40	40	< 118	118		20	6/23/2018	109-99-9
Toluene	< 10	10	< 37.7	37.7		20	6/23/2018	108-88-3
trans-1,2-Dichloroethene	< 10	10	< 39.6	39.6		20	6/23/2018	156-60-5
Trichloroethene	**189**	**10**	**1,010**	**53.7**		20	6/23/2018	79-01-6
Trichlorofluoromethane(F-11)	< 10	10	< 56.2	56.2		20	6/23/2018	75-69-4
Trichlorotrifluoroethane(F-113)	**14**	**10**	**110**	**76.6**		20	6/23/2018	76-13-1
Vinyl chloride	< 10	10	< 25.6	25.6		20	6/23/2018	75-01-4
Surr: 4-Bromofluorobenzene	96.0	70-130	%REC					

Airtech Environmental Laboratories (AEL) - AZ 0740

4620 E.Elwood St., Suite 13, Phoenix, AZ 85040 480-968-5888 Fax 480-966-1888

Client:	Wood	**Client Sample ID:**	TSSV-6M-SG-061118
Project:	Cave Creek Landfill	**Project Number:**	14-2017-2034
Lab Order:	18F022	**Collection:**	6/13/2018
Lab ID:	14	**Matrix:**	Soil vapor

	ppbv		ug/M^3				Date	
Analyses	**Result**	**Limit**	**Result**	**Limit**	**Qual**	**DF**	**Analyzed**	**CAS#**
VOLATILE ORGANICS IN AIR	**TO-15**						Analyst: JJ	
1,1-Dichloroethane	< 50	50	< 203	203		100	6/22/2018	75-34-3
1,1-Dichloroethene	< 50	50	< 199	199		100	6/22/2018	75-35-4
1,2-Dichlorobenzene	< 50	50	< 301	301		100	6/22/2018	95-50-1
1,2-Dichloroethane	< 50	50	< 203	203		100	6/22/2018	107-06-2
2-Butanone (MEK)	< 500	500	< 1,480	1,480		100	6/22/2018	78-93-3
Acetone	< 500	500	< 1,190	1,190		100	6/22/2018	67-64-1
Benzene	< 50	50	< 160	160		100	6/22/2018	71-43-2
Chlorobenzene	< 50	50	< 230	230		100	6/22/2018	108-90-7
Chloroform	< 50	50	< 244	244		100	6/22/2018	67-66-3
cis-1,2-Dichloroethene	**52**	**50**	**206**	**198**		100	6/22/2018	156-59-2
Dichlorodifluoromethane(F-12)	< 100	100	< 495	495		100	6/22/2018	75-71-8
Ethylbenzene	< 50	50	< 217	217		100	6/22/2018	100-41-4
m&p-Xylene	< 100	100	< 434	434		100	6/22/2018	179601-23-1
Methylene chloride	< 200	200	< 694	694		100	6/22/2018	75-09-2
o-Xylene	< 50	50	< 217	217		100	6/22/2018	95-47-6
Tetrachloroethene	< 100	100	< 678	678		100	6/22/2018	127-18-4
Tetrahydrofuran	< 200	200	< 590	590		100	6/22/2018	109-99-9
Toluene	< 50	50	< 189	189		100	6/22/2018	108-88-3
trans-1,2-Dichloroethene	< 50	50	< 198	198		100	6/22/2018	156-60-5
Trichloroethene	**1,330**	**50**	**7,140**	**269**		100	6/22/2018	79-01-6
Trichlorofluoromethane(F-11)	< 50	50	< 281	281		100	6/22/2018	75-69-4
Trichlorotrifluoroethane(F-113)	< 50	50	< 383	383		100	6/22/2018	76-13-1
Vinyl chloride	< 50	50	< 128	128		100	6/22/2018	75-01-4
Surr: 4-Bromofluorobenzene	96.7	70-130	%REC					

Airtech Environmental Laboratories (AEL) - AZ 0740

4620 E.Elwood St., Suite 13, Phoenix, AZ 85040 480-968-5888 Fax 480-966-1888

Client:	Wood	**Client Sample ID:**	TSSV-6D-SG-061118
Project:	Cave Creek Landfill	**Project Number:**	14-2017-2034
Lab Order:	18F022	**Collection:**	6/13/2018
Lab ID:	15	**Matrix:**	Soil vapor

	ppbv		ug/M^3				Date	
Analyses	**Result**	**Limit**	**Result**	**Limit**	**Qual**	**DF**	**Analyzed**	**CAS#**
VOLATILE ORGANICS IN AIR	**TO-15**						Analyst: JJ	
1,1-Dichloroethane	< 50	50	< 203	203		100	6/23/2018	75-34-3
1,1-Dichloroethene	< 50	50	< 199	199		100	6/23/2018	75-35-4
1,2-Dichlorobenzene	< 50	50	< 301	301		100	6/23/2018	95-50-1
1,2-Dichloroethane	< 50	50	< 203	203		100	6/23/2018	107-06-2
2-Butanone (MEK)	< 500	500	< 1,480	1,480		100	6/23/2018	78-93-3
Acetone	< 500	500	< 1,190	1,190		100	6/23/2018	67-64-1
Benzene	< 50	50	< 160	160		100	6/23/2018	71-43-2
Chlorobenzene	< 50	50	< 230	230		100	6/23/2018	108-90-7
Chloroform	< 50	50	< 244	244		100	6/23/2018	67-66-3
cis-1,2-Dichloroethene	**96**	**50**	**380**	**198**		100	6/23/2018	156-59-2
Dichlorodifluoromethane(F-12)	< 100	100	< 495	495		100	6/23/2018	75-71-8
Ethylbenzene	< 50	50	< 217	217		100	6/23/2018	100-41-4
m&p-Xylene	< 100	100	< 434	434		100	6/23/2018	179601-23-1
Methylene chloride	< 200	200	< 694	694		100	6/23/2018	75-09-2
o-Xylene	< 50	50	< 217	217		100	6/23/2018	95-47-6
Tetrachloroethene	**101**	**100**	**685**	**678**		100	6/23/2018	127-18-4
Tetrahydrofuran	< 200	200	< 590	590		100	6/23/2018	109-99-9
Toluene	< 50	50	< 189	189		100	6/23/2018	108-88-3
trans-1,2-Dichloroethene	< 50	50	< 198	198		100	6/23/2018	156-60-5
Trichloroethene	**1,520**	**50**	**8,160**	**269**		100	6/23/2018	79-01-6
Trichlorofluoromethane(F-11)	< 50	50	< 281	281		100	6/23/2018	75-69-4
Trichlorotrifluoroethane(F-113)	**107**	**50**	**820**	**383**		100	6/23/2018	76-13-1
Vinyl chloride	< 50	50	< 128	128		100	6/23/2018	75-01-4
Surr: 4-Bromofluorobenzene	88.6	70-130	%REC					

Airtech Environmental Laboratories (AEL) - AZ 0740

4620 E.Elwood St., Suite 13, Phoenix, AZ 85040 480-968-5888 Fax 480-966-1888

Client:	Wood	**Client Sample ID:**	TSSV-7S-SG-061118
Project:	Cave Creek Landfill	**Project Number:**	14-2017-2034
Lab Order:	18F022	**Collection:**	6/13/2018
Lab ID:	16	**Matrix:**	Soil vapor

	ppbv		ug/M^3				Date	
Analyses	**Result**	**Limit**	**Result**	**Limit**	**Qual**	**DF**	**Analyzed**	**CAS#**
VOLATILE ORGANICS IN AIR		**TO-15**					Analyst: JJ	
1,1-Dichloroethane	< 10	10	< 40.5	40.5		20	6/22/2018	75-34-3
1,1-Dichloroethene	**15**	**10**	**61.1**	**39.7**		20	6/22/2018	75-35-4
1,2-Dichlorobenzene	< 10	10	< 60.1	60.1		20	6/22/2018	95-50-1
1,2-Dichloroethane	< 10	10	< 40.5	40.5		20	6/22/2018	107-06-2
2-Butanone (MEK)	< 100	100	< 295	295		20	6/22/2018	78-93-3
Acetone	< 100	100	< 238	238		20	6/22/2018	67-64-1
Benzene	< 10	10	< 31.9	31.9		20	6/22/2018	71-43-2
Chlorobenzene	< 10	10	< 46.0	46.0		20	6/22/2018	108-90-7
Chloroform	< 10	10	< 48.8	48.8		20	6/22/2018	67-66-3
cis-1,2-Dichloroethene	< 10	10	< 39.6	39.6		20	6/22/2018	156-59-2
Dichlorodifluoromethane(F-12)	< 20	20	< 99.0	99.0		20	6/22/2018	75-71-8
Ethylbenzene	< 10	10	< 43.4	43.4		20	6/22/2018	100-41-4
m&p-Xylene	< 20	20	< 86.8	86.8		20	6/22/2018	179601-23-1
Methylene chloride	< 40	40	< 139	139		20	6/22/2018	75-09-2
o-Xylene	< 10	10	< 43.4	43.4		20	6/22/2018	95-47-6
Tetrachloroethene	**24**	**20**	**160**	**136**		20	6/22/2018	127-18-4
Tetrahydrofuran	< 40	40	< 118	118		20	6/22/2018	109-99-9
Toluene	< 10	10	< 37.7	37.7		20	6/22/2018	108-88-3
trans-1,2-Dichloroethene	< 10	10	< 39.6	39.6		20	6/22/2018	156-60-5
Trichloroethene	**192**	**10**	**1,030**	**53.7**		20	6/22/2018	79-01-6
Trichlorofluoromethane(F-11)	**50**	**10**	**281**	**56.2**		20	6/22/2018	75-69-4
Trichlorotrifluoroethane(F-113)	**11**	**10**	**87.3**	**76.6**		20	6/22/2018	76-13-1
Vinyl chloride	< 10	10	< 25.6	25.6		20	6/22/2018	75-01-4
Surr: 4-Bromofluorobenzene	97.1	70-130	%REC					

Airtech Environmental Laboratories (AEL) - AZ 0740

4620 E.Elwood St., Suite 13, Phoenix, AZ 85040 480-968-5888 Fax 480-966-1888

Client:	Wood	**Client Sample ID:**	TSSV-7M-SG-061118
Project:	Cave Creek Landfill	**Project Number:**	14-2017-2034
Lab Order:	18F022	**Collection:**	6/13/2018
Lab ID:	17	**Matrix:**	Soil vapor

	ppbv		ug/M^3				Date	
Analyses	**Result**	**Limit**	**Result**	**Limit**	**Qual**	**DF**	**Analyzed**	**CAS#**
VOLATILE ORGANICS IN AIR	**TO-15**						Analyst: JJ	
1,1-Dichloroethane	< 50	50	< 203	203		100	6/23/2018	75-34-3
1,1-Dichloroethene	**2,220**	**50**	**8,810**	**199**		100	6/23/2018	75-35-4
1,2-Dichlorobenzene	< 50	50	< 301	301		100	6/23/2018	95-50-1
1,2-Dichloroethane	< 50	50	< 203	203		100	6/23/2018	107-06-2
2-Butanone (MEK)	< 500	500	< 1,480	1,480		100	6/23/2018	78-93-3
Acetone	< 500	500	< 1,190	1,190		100	6/23/2018	67-64-1
Benzene	< 50	50	< 160	160		100	6/23/2018	71-43-2
Chlorobenzene	**64**	**50**	**294**	**230**		100	6/23/2018	108-90-7
Chloroform	< 50	50	< 244	244		100	6/23/2018	67-66-3
cis-1,2-Dichloroethene	**53**	**50**	**210**	**198**		100	6/23/2018	156-59-2
Dichlorodifluoromethane(F-12)	**124**	**100**	**614**	**495**		100	6/23/2018	75-71-8
Ethylbenzene	< 50	50	< 217	217		100	6/23/2018	100-41-4
m&p-Xylene	< 100	100	< 434	434		100	6/23/2018	179601-23-1
Methylene chloride	**218**	**200**	**756**	**694**		100	6/23/2018	75-09-2
o-Xylene	< 50	50	< 217	217		100	6/23/2018	95-47-6
Tetrachloroethene	**324**	**100**	**2,200**	**678**		100	6/23/2018	127-18-4
Tetrahydrofuran	< 200	200	< 590	590		100	6/23/2018	109-99-9
Toluene	< 50	50	< 189	189		100	6/23/2018	108-88-3
trans-1,2-Dichloroethene	< 50	50	< 198	198		100	6/23/2018	156-60-5
Trichloroethene	**2,180**	**50**	**11,700**	**269**		100	6/23/2018	79-01-6
Trichlorofluoromethane(F-11)	< 50	50	< 281	281		100	6/23/2018	75-69-4
Trichlorotrifluoroethane(F-113)	**145**	**50**	**1,110**	**383**		100	6/23/2018	76-13-1
Vinyl chloride	< 50	50	< 128	128		100	6/23/2018	75-01-4
Surr: 4-Bromofluorobenzene	87.1	70-130	%REC					

Airtech Environmental Laboratories (AEL) - AZ 0740

4620 E.Elwood St., Suite 13, Phoenix, AZ 85040 480-968-5888 Fax 480-966-1888

Client:	Wood	**Client Sample ID:**	TSSV-7D-SG-061118
Project:	Cave Creek Landfill	**Project Number:**	14-2017-2034
Lab Order:	18F022	**Collection:**	6/13/2018
Lab ID:	18	**Matrix:**	Soil vapor

	ppbv		ug/M^3				Date	
Analyses	**Result**	**Limit**	**Result**	**Limit**	**Qual**	**DF**	**Analyzed**	**CAS#**
VOLATILE ORGANICS IN AIR	**TO-15**						Analyst: JJ	
1,1-Dichloroethane	< 250	250	< 1,010	1,010		500	6/23/2018	75-34-3
1,1-Dichloroethene	**1,470**	**250**	**5,840**	**993**		500	6/23/2018	75-35-4
1,2-Dichlorobenzene	< 250	250	< 1,500	1,500		500	6/23/2018	95-50-1
1,2-Dichloroethane	< 250	250	< 1,010	1,010		500	6/23/2018	107-06-2
2-Butanone (MEK)	< 2,500	2,500	< 7,380	7,380		500	6/23/2018	78-93-3
Acetone	< 2,500	2,500	< 5,950	5,950		500	6/23/2018	67-64-1
Benzene	< 250	250	< 798	798		500	6/23/2018	71-43-2
Chlorobenzene	< 250	250	< 1,150	1,150		500	6/23/2018	108-90-7
Chloroform	< 250	250	< 1,220	1,220		500	6/23/2018	67-66-3
cis-1,2-Dichloroethene	< 250	250	< 990	990		500	6/23/2018	156-59-2
Dichlorodifluoromethane(F-12)	< 500	500	< 2,480	2,480		500	6/23/2018	75-71-8
Ethylbenzene	< 250	250	< 1,085	1,090		500	6/23/2018	100-41-4
m&p-Xylene	< 500	500	< 2,170	2,170		500	6/23/2018	179601-23-1
Methylene chloride	< 1,000	1,000	< 3,470	3,470		500	6/23/2018	75-09-2
o-Xylene	< 250	250	< 1,090	1,090		500	6/23/2018	95-47-6
Tetrachloroethene	< 500	500	< 3,390	3,390		500	6/23/2018	127-18-4
Tetrahydrofuran	< 1,000	1,000	< 2,950	2,950		500	6/23/2018	109-99-9
Toluene	< 250	250	< 943	943		500	6/23/2018	108-88-3
trans-1,2-Dichloroethene	< 250	250	< 990	990		500	6/23/2018	156-60-5
Trichloroethene	**3,230**	**250**	**17,300**	**1,340**		500	6/23/2018	79-01-6
Trichlorofluoromethane(F-11)	< 250	250	< 1,410	1,410		500	6/23/2018	75-69-4
Trichlorotrifluoroethane(F-113)	**380**	**250**	**2,910**	**1,920**		500	6/23/2018	76-13-1
Vinyl chloride	< 250	250	< 640	640		500	6/23/2018	75-01-4
Surr: 4-Bromofluorobenzene	90.2	70-130	%REC					

Airtech Environmental Laboratories (AEL) - AZ 0740

4620 E.Elwood St., Suite 13, Phoenix, AZ 85040 480-968-5888 Fax 480-966-1888

Client:	Wood	**Client Sample ID:**	TSSV-7PZ-SG-061118
Project:	Cave Creek Landfill	**Project Number:**	14-2017-2034
Lab Order:	18F022	**Collection:**	6/13/2018
Lab ID:	19	**Matrix:**	Soil vapor

	ppbv		ug/M^3				Date	
Analyses	**Result**	**Limit**	**Result**	**Limit**	**Qual**	**DF**	**Analyzed**	**CAS#**
VOLATILE ORGANICS IN AIR	**TO-15**						Analyst: JJ	
1,1-Dichloroethane	< 250	250	< 1,010	1,010		500	6/23/2018	75-34-3
1,1-Dichloroethene	**850**	**250**	**3,380**	**993**		500	6/23/2018	75-35-4
1,2-Dichlorobenzene	< 250	250	< 1,500	1,500		500	6/23/2018	95-50-1
1,2-Dichloroethane	< 250	250	< 1,010	1,010		500	6/23/2018	107-06-2
2-Butanone (MEK)	< 2,500	2,500	< 7,380	7,380		500	6/23/2018	78-93-3
Acetone	< 2,500	2,500	< 5,950	5,950		500	6/23/2018	67-64-1
Benzene	< 250	250	< 798	798		500	6/23/2018	71-43-2
Chlorobenzene	< 250	250	< 1,150	1,150		500	6/23/2018	108-90-7
Chloroform	< 250	250	< 1,220	1,220		500	6/23/2018	67-66-3
cis-1,2-Dichloroethene	**675**	**250**	**2,670**	**990**		500	6/23/2018	156-59-2
Dichlorodifluoromethane(F-12)	< 500	500	< 2,480	2,480		500	6/23/2018	75-71-8
Ethylbenzene	< 250	250	< 1,090	1,090		500	6/23/2018	100-41-4
m&p-Xylene	< 500	500	< 2,170	2,170		500	6/23/2018	179601-23-1
Methylene chloride	< 1,000	1,000	< 3,470	3,470		500	6/23/2018	75-09-2
o-Xylene	< 250	250	< 1,090	1,090		500	6/23/2018	95-47-6
Tetrachloroethene	**950**	**500**	**6,440**	**3,390**		500	6/23/2018	127-18-4
Tetrahydrofuran	< 1,000	1,000	< 2,950	2,950		500	6/23/2018	109-99-9
Toluene	< 250	250	< 943	943		500	6/23/2018	108-88-3
trans-1,2-Dichloroethene	< 250	250	< 990	990		500	6/23/2018	156-60-5
Trichloroethene	**4,950**	**250**	**26,600**	**1,340**		500	6/23/2018	79-01-6
Trichlorofluoromethane(F-11)	< 250	250	< 1,410	1,410		500	6/23/2018	75-69-4
Trichlorotrifluoroethane(F-113)	**760**	**250**	**5,820**	**1,920**		500	6/23/2018	76-13-1
Vinyl chloride	< 250	250	< 640	640		500	6/23/2018	75-01-4
Surr: 4-Bromofluorobenzene	94.9	70-130	%REC					

Airtech Environmental Laboratories (AEL) - AZ 0740

4620 E.Elwood St., Suite 13, Phoenix, AZ 85040 480-968-5888 Fax 480-966-1888

Client:	Wood	**Client Sample ID:**	DUP01-061318
Project:	Cave Creek Landfill	**Project Number:**	14-2017-2034
Lab Order:	18F022	**Collection:**	6/13/2018
Lab ID:	20	**Matrix:**	Soil vapor

	ppbv		ug/M^3				Date	
Analyses	**Result**	**Limit**	**Result**	**Limit**	**Qual**	**DF**	**Analyzed**	**CAS#**
VOLATILE ORGANICS IN AIR	**TO-15**						Analyst: JJ	
1,1-Dichloroethane	< 250	250	< 1,010	1,010		500	6/23/2018	75-34-3
1,1-Dichloroethene	**870**	**250**	**3,450**	**993**		500	6/23/2018	75-35-4
1,2-Dichlorobenzene	< 250	250	< 1,500	1,500		500	6/23/2018	95-50-1
1,2-Dichloroethane	< 250	250	< 1,010	1,010		500	6/23/2018	107-06-2
2-Butanone (MEK)	< 2,500	2,500	< 7,380	7,380		500	6/23/2018	78-93-3
Acetone	< 2,500	2,500	< 5,950	5,950		500	6/23/2018	67-64-1
Benzene	< 250	250	< 798	798		500	6/23/2018	71-43-2
Chlorobenzene	< 250	250	< 1,150	1,150		500	6/23/2018	108-90-7
Chloroform	< 250	250	< 1,220	1,220		500	6/23/2018	67-66-3
cis-1,2-Dichloroethene	**720**	**250**	**2,850**	**990**		500	6/23/2018	156-59-2
Dichlorodifluoromethane(F-12)	< 500	500	< 2,480	2,480		500	6/23/2018	75-71-8
Ethylbenzene	< 250	250	< 1,090	1,090		500	6/23/2018	100-41-4
m&p-Xylene	< 500	500	< 2,170	2,170		500	6/23/2018	179601-23-1
Methylene chloride	< 1,000	1,000	< 3,470	3,470		500	6/23/2018	75-09-2
o-Xylene	< 250	250	< 1,090	1,090		500	6/23/2018	95-47-6
Tetrachloroethene	**595**	**500**	**4,030**	**3,390**		500	6/23/2018	127-18-4
Tetrahydrofuran	< 1,000	1,000	< 2,950	2,950		500	6/23/2018	109-99-9
Toluene	< 250	250	< 943	943		500	6/23/2018	108-88-3
trans-1,2-Dichloroethene	< 250	250	< 990	990		500	6/23/2018	156-60-5
Trichloroethene	**4,420**	**250**	**23,700**	**1,340**		500	6/23/2018	79-01-6
Trichlorofluoromethane(F-11)	< 250	250	< 1,410	1,410		500	6/23/2018	75-69-4
Trichlorotrifluoroethane(F-113)	**750**	**250**	**5,750**	**1,920**		500	6/23/2018	76-13-1
Vinyl chloride	< 250	250	< 640	640		500	6/23/2018	75-01-4
Surr: 4-Bromofluorobenzene	94.8	70-130	%REC					

Airtech Environmental Laboratories (AEL) - AZ 0740

4620 E.Elwood St., Suite 13, Phoenix, AZ 85040 480-968-5888 Fax 480-966-1888

Client:	Wood	**Client Sample ID:**	N/A
Project:	Cave Creek Landfill	**Project Number:**	14-2017-2034
Lab Order:	18F022	**Collection:**	N/A
Lab ID:	Blank	**Matrix:**	Nitrogen

Method QC Data

Batch: MS010621 Analyst: JJ

Analyses	ppbv Result	ppbv Limit	ug/M^3 Result	ug/M^3 Limit	Qual	DF	Date Analyzed	CAS#
VOLATILE ORGANICS IN AIR		**TO-15**					Analyst: JJ	
1,1-Dichloroethane	< 0.5	0.5	< 2.03	2.03		1	6/21/2018	75-34-3
1,1-Dichloroethene	< 0.5	0.5	< 1.99	1.99		1	6/21/2018	75-35-4
1,2-Dichlorobenzene	< 0.5	0.5	< 3.01	3.01		1	6/21/2018	95-50-1
1,2-Dichloroethane	< 0.5	0.5	< 2.03	2.03		1	6/21/2018	107-06-2
2-Butanone (MEK)	< 5.0	5.0	< 14.8	14.8		1	6/21/2018	78-93-3
Acetone	< 5.0	5.0	< 11.9	11.9		1	6/21/2018	67-64-1
Benzene	< 0.5	0.5	< 1.60	1.60		1	6/21/2018	71-43-2
Chlorobenzene	< 0.5	0.5	< 2.30	2.30		1	6/21/2018	108-90-7
Chloroform	< 0.5	0.5	< 2.44	2.44		1	6/21/2018	67-66-3
cis-1,2-Dichloroethene	< 0.5	0.5	< 1.98	1.98		1	6/21/2018	156-59-2
Dichlorodifluoromethane(F-12)	< 1.0	1.0	< 4.95	4.95		1	6/21/2018	75-71-8
Ethylbenzene	< 0.5	0.5	< 2.17	2.17		1	6/21/2018	100-41-4
m&p-Xylene	< 1.0	1.0	< 4.34	4.34		1	6/21/2018	179601-23-1
Methylene chloride	< 2.0	2.0	< 6.94	6.94		1	6/21/2018	75-09-2
o-Xylene	< 0.5	0.5	< 2.17	2.17		1	6/21/2018	95-47-6
Tetrachloroethene	< 1.0	1.0	< 6.78	6.78		1	6/21/2018	127-18-4
Tetrahydrofuran	< 2.0	2.0	< 5.90	5.90		1	6/21/2018	109-99-9
Toluene	< 0.5	0.5	< 1.89	1.89		1	6/21/2018	108-88-3
trans-1,2-Dichloroethene	< 0.5	0.5	< 1.98	1.98		1	6/21/2018	156-60-5
Trichloroethene	< 0.5	0.5	< 2.69	2.69		1	6/21/2018	79-01-6
Trichlorofluoromethane(F-11)	< 0.5	0.5	< 2.81	2.81		1	6/21/2018	75-69-4
Trichlorotrifluoroethane(F-113)	< 0.5	0.5	< 3.83	3.83		1	6/21/2018	76-13-1
Vinyl chloride	< 0.5	0.5	< 1.28	1.28		1	6/21/2018	75-01-4
Surr: 4-Bromofluorobenzene	89.8	70-130	%REC					

Airtech Environmental Laboratories (AEL) - AZ 0740

4620 E.Elwood St., Suite 13, Phoenix, AZ 85040 480-968-5888 Fax 480-966-1888

Client:	Wood	**Client Sample ID:**	N/A
Project:	Cave Creek Landfill	**Project Number:**	14-2017-2034
Lab Order:	18F022	**Collection:**	N/A
Lab ID:	LCS/LCSD	**Matrix:**	Nitrogen

Method QC Data

Date Analyzed: 6/21/2018 Batch: MS010621 Analyst: JJ

Analyses	LCS Result	LCS %REC	LCSD Result	LCSD %REC	T.V.	%RPD	Unit	Qualifier LCS	Qualifier LCSD	Qualifier RPD
VOLATILE ORGANICS IN AIR	**TO-15**							70-130%		<25%
Dichlorodifluoromethane(F-12)	9.7	97.0	9.2	91.8	10.0	5.5	ppbv			
Vinyl Chloride	8.1	81.4	7.8	78.0	10.0	4.3	ppbv			
Trichlorofluoromethane (F-11)	9.8	97.7	9.2	91.7	10.0	6.3	ppbv			
Acetone	8.6	86.2	8.1	81.3	10.0	5.9	ppbv			
1,1-Dichloroethene	8.5	85.4	8.0	80.3	10.0	6.2	ppbv			
Trichlorotrifluoroethane (F-113)	9.4	93.5	8.8	87.6	10.0	6.5	ppbv			
Methylene Chloride	9.5	94.7	8.7	86.6	10.0	8.9	ppbv			
trans-1,2-Dichloroethene	9.0	90.4	8.4	84.1	10.0	7.2	ppbv			
1,1-Dichloroethane	8.6	86.1	7.9	78.8	10.0	8.9	ppbv			
2-Butanone (MEK)	9.2	92.0	7.8	78.4	10.0	16.0	ppbv			
cis-1,2-Dichloroethene	9.0	90.4	8.4	84.4	10.0	6.9	ppbv			
Chloroform	9.1	91.2	8.4	84.2	10.0	8.0	ppbv			
Tetrahydrofuran	9.0	90.4	8.0	79.5	10.0	12.8	ppbv			
1,2-Dichloroethane	8.8	87.5	8.0	80.4	10.0	8.5	ppbv			
Benzene	8.9	88.9	8.1	80.5	10.0	9.9	ppbv			
Trichloroethene	10.0	99.7	9.1	90.6	10.0	9.6	ppbv			
Toluene	9.5	95.2	8.7	87.1	10.0	8.9	ppbv			
Tetrachloroethene	10.2	102	9.2	92.0	10.0	10.3	ppbv			
Chlorobenzene	9.5	95.2	8.7	86.8	10.0	9.2	ppbv			
Ethylbenzene	9.8	98.0	8.8	87.6	10.0	11.2	ppbv			
m&p-Xylene	20.0	100	17.8	89.1	20.0	11.3	ppbv			
o-Xylene	9.8	97.9	8.9	88.7	10.0	9.9	ppbv			
1,2-Dichlorobenzene	10.0	100	9.3	92.5	10.0	8.1	ppbv			
Surr: 4-Bromofluorobenzene	10.1	101	10.2	102		1.0	%REC			
		70-130%		70-130%						

Airtech Environmental Laboratories (AEL) - AZ 0740

4620 E.Elwood St., Suite 13, Phoenix, AZ 85040 480-968-5888 Fax 480-966-1888

Client:	Wood	**Client Sample ID:**	N/A
Project:	Cave Creek Landfill	**Project Number:**	14-2017-2034
Lab Order:	18F022	**Collection:**	N/A
Lab ID:	Blank	**Matrix:**	Nitrogen

Method QC Data

Batch: MS010622 Analyst: JJ

Analyses	ppbv Result	ppbv Limit	ug/M^3 Result	ug/M^3 Limit	Qual	DF	Date Analyzed	CAS#
VOLATILE ORGANICS IN AIR		**TO-15**					Analyst: JJ	
1,1-Dichloroethane	< 0.5	0.5	< 2.03	2.03		1	6/22/2018	75-34-3
1,1-Dichloroethene	< 0.5	0.5	< 1.99	1.99		1	6/22/2018	75-35-4
1,2-Dichlorobenzene	< 0.5	0.5	< 3.01	3.01		1	6/22/2018	95-50-1
1,2-Dichloroethane	< 0.5	0.5	< 2.03	2.03		1	6/22/2018	107-06-2
2-Butanone (MEK)	< 5.0	5.0	< 14.8	14.8		1	6/22/2018	78-93-3
Acetone	< 5.0	5.0	< 11.9	11.9		1	6/22/2018	67-64-1
Benzene	< 0.5	0.5	< 1.60	1.60		1	6/22/2018	71-43-2
Chlorobenzene	< 0.5	0.5	< 2.30	2.30		1	6/22/2018	108-90-7
Chloroform	< 0.5	0.5	< 2.44	2.44		1	6/22/2018	67-66-3
cis-1,2-Dichloroethene	< 0.5	0.5	< 1.98	1.98		1	6/22/2018	156-59-2
Dichlorodifluoromethane(F-12)	< 1.0	1.0	< 4.95	4.95		1	6/22/2018	75-71-8
Ethylbenzene	< 0.5	0.5	< 2.17	2.17		1	6/22/2018	100-41-4
m&p-Xylene	< 1.0	1.0	< 4.34	4.34		1	6/22/2018	179601-23-1
Methylene chloride	< 2.0	2.0	< 6.94	6.94		1	6/22/2018	75-09-2
o-Xylene	< 0.5	0.5	< 2.17	2.17		1	6/22/2018	95-47-6
Tetrachloroethene	< 1.0	1.0	< 6.78	6.78		1	6/22/2018	127-18-4
Tetrahydrofuran	< 2.0	2.0	< 5.90	5.90		1	6/22/2018	109-99-9
Toluene	< 0.5	0.5	< 1.89	1.89		1	6/22/2018	108-88-3
trans-1,2-Dichloroethene	< 0.5	0.5	< 1.98	1.98		1	6/22/2018	156-60-5
Trichloroethene	< 0.5	0.5	< 2.69	2.69		1	6/22/2018	79-01-6
Trichlorofluoromethane(F-11)	< 0.5	0.5	< 2.81	2.81		1	6/22/2018	75-69-4
Trichlorotrifluoroethane(F-113)	< 0.5	0.5	< 3.83	3.83		1	6/22/2018	76-13-1
Vinyl chloride	< 0.5	0.5	< 1.28	1.28		1	6/22/2018	75-01-4
Surr: 4-Bromofluorobenzene	91.8	70-130	%REC					

Airtech Environmental Laboratories (AEL) - AZ 0740

4620 E.Elwood St., Suite 13, Phoenix, AZ 85040 480-968-5888 Fax 480-966-1888

Client:	Wood	**Client Sample ID:**	N/A
Project:	Cave Creek Landfill	**Project Number:**	14-2017-2034
Lab Order:	18F022	**Collection:**	N/A
Lab ID:	LCS/LCSD	**Matrix:**	Nitrogen

Method QC Data

Date Analyzed: 6/22/2018 Batch: MS010622 Analyst: JJ

Analyses	LCS Result	LCS %REC	LCSD Result	LCSD %REC	T.V.	%RPD	Unit	Qualifier LCS	Qualifier LCSD	Qualifier RPD
VOLATILE ORGANICS IN AIR	**TO-15**							70-130%		<25%
Dichlorodifluoromethane(F-12)	10.2	102	10.6	106	10.0	3.4	ppbv			
Vinyl Chloride	8.7	87.2	8.2	82.3	10.0	5.8	ppbv			
Trichlorofluoromethane (F-11)	10.2	101.6	10.1	101	10.0	0.3	ppbv			
Acetone	8.5	85.3	8.5	85.4	10.0	0.1	ppbv			
1,1-Dichloroethene	8.7	87.4	8.8	87.6	10.0	0.2	ppbv			
Trichlorotrifluoroethane (F-113)	9.5	94.6	9.7	96.5	10.0	2.0	ppbv			
Methylene Chloride	9.4	94.1	9.3	92.8	10.0	1.4	ppbv			
trans-1,2-Dichloroethene	8.9	89.3	8.8	87.9	10.0	1.6	ppbv			
1,1-Dichloroethane	8.5	84.6	8.6	86.2	10.0	1.9	ppbv			
2-Butanone (MEK)	8.0	79.8	8.6	86.3	10.0	7.8	ppbv			
cis-1,2-Dichloroethene	8.9	89.0	8.9	88.6	10.0	0.5	ppbv			
Chloroform	8.9	88.8	9.0	90.0	10.0	1.3	ppbv			
Tetrahydrofuran	8.5	84.8	9.1	90.5	10.0	6.5	ppbv			
1,2-Dichloroethane	8.3	82.8	8.6	85.8	10.0	3.6	ppbv			
Benzene	8.3	82.8	8.4	84.3	10.0	1.8	ppbv			
Trichloroethene	10.2	102	10.2	102	10.0	0.3	ppbv			
Toluene	9.7	97.1	9.7	97.3	10.0	0.2	ppbv			
Tetrachloroethene	10.8	108	10.7	107	10.0	0.7	ppbv			
Chlorobenzene	9.6	96.3	10.0	100	10.0	3.9	ppbv			
Ethylbenzene	9.5	95.4	9.8	97.8	10.0	2.5	ppbv			
m&p-Xylene	19.1	95	20.6	103	20.0	7.8	ppbv			
o-Xylene	9.6	95.7	10.3	103	10.0	7.0	ppbv			
1,2-Dichlorobenzene	10.2	102	10.8	108	10.0	6.3	ppbv			
Surr: 4-Bromofluorobenzene	10.3	103	10.2	102		0.9	%REC			
		70-130%		70-130%						

Airtech Environmental Laboratories (AEL) - AZ 0740

4620 E.Elwood St., Suite 13, Phoenix, AZ 85040 480-968-5888 Fax 480-966-1888

Client:	Wood	**Client Sample ID:**	N/A
Project:	Cave Creek Landfill	**Project Number:**	14-2017-2034
Lab Order:	18F022	**Collection:**	N/A
Lab ID:	Blank	**Matrix:**	Nitrogen

Method QC Data

Batch: MS010626 Analyst: JJ

Analyses	ppbv Result	ppbv Limit	ug/M^3 Result	ug/M^3 Limit	Qual	DF	Date Analyzed	CAS#
VOLATILE ORGANICS IN AIR		**TO-15**					Analyst: JJ	
1,1-Dichloroethane	< 0.5	0.5	< 2.03	2.03		1	6/26/2018	75-34-3
1,1-Dichloroethene	< 0.5	0.5	< 1.99	1.99		1	6/26/2018	75-35-4
1,2-Dichlorobenzene	< 0.5	0.5	< 3.01	3.01		1	6/26/2018	95-50-1
1,2-Dichloroethane	< 0.5	0.5	< 2.03	2.03		1	6/26/2018	107-06-2
2-Butanone (MEK)	< 5.0	5.0	< 14.8	14.8		1	6/26/2018	78-93-3
Acetone	< 5.0	5.0	< 11.9	11.9		1	6/26/2018	67-64-1
Benzene	< 0.5	0.5	< 1.60	1.60		1	6/26/2018	71-43-2
Chlorobenzene	< 0.5	0.5	< 2.30	2.30		1	6/26/2018	108-90-7
Chloroform	< 0.5	0.5	< 2.44	2.44		1	6/26/2018	67-66-3
cis-1,2-Dichloroethene	< 0.5	0.5	< 1.98	1.98		1	6/26/2018	156-59-2
Dichlorodifluoromethane(F-12)	< 1.0	1.0	< 4.95	4.95		1	6/26/2018	75-71-8
Ethylbenzene	< 0.5	0.5	< 2.17	2.17		1	6/26/2018	100-41-4
m&p-Xylene	< 1.0	1.0	< 4.34	4.34		1	6/26/2018	179601-23-1
Methylene chloride	< 2.0	2.0	< 6.94	6.94		1	6/26/2018	75-09-2
o-Xylene	< 0.5	0.5	< 2.17	2.17		1	6/26/2018	95-47-6
Tetrachloroethene	< 1.0	1.0	< 6.78	6.78		1	6/26/2018	127-18-4
Tetrahydrofuran	< 2.0	2.0	< 5.90	5.90		1	6/26/2018	109-99-9
Toluene	< 0.5	0.5	< 1.89	1.89		1	6/26/2018	108-88-3
trans-1,2-Dichloroethene	< 0.5	0.5	< 1.98	1.98		1	6/26/2018	156-60-5
Trichloroethene	< 0.5	0.5	< 2.69	2.69		1	6/26/2018	79-01-6
Trichlorofluoromethane(F-11)	< 0.5	0.5	< 2.81	2.81		1	6/26/2018	75-69-4
Trichlorotrifluoroethane(F-113)	< 0.5	0.5	< 3.83	3.83		1	6/26/2018	76-13-1
Vinyl chloride	< 0.5	0.5	< 1.28	1.28		1	6/26/2018	75-01-4
Surr: 4-Bromofluorobenzene	92.5	70-130	%REC					

Airtech Environmental Laboratories (AEL) - AZ 0740

4620 E.Elwood St., Suite 13, Phoenix, AZ 85040 480-968-5888 Fax 480-966-1888

Client:	Wood	**Client Sample ID:**	N/A
Project:	Cave Creek Landfill	**Project Number:**	14-2017-2034
Lab Order:	18F022	**Collection:**	N/A
Lab ID:	LCS/LCSD	**Matrix:**	Nitrogen

Method QC Data

Date Analyzed: 6/26/2018 Batch: MS010626 Analyst: JJ

Analyses	LCS Result	LCS %REC	LCSD Result	LCSD %REC	T.V.	%RPD	Unit	Qualifier LCS	Qualifier LCSD	Qualifier RPD
VOLATILE ORGANICS IN AIR	**TO-15**							70-130%		<25%
Dichlorodifluoromethane(F-12)	9.5	94.8	10.0	99.6	10.0	4.9	ppbv			
Vinyl Chloride	9.8	97.8	10.6	106	10.0	7.6	ppbv			
Trichlorofluoromethane (F-11)	10.2	102	10.4	104	10.0	1.6	ppbv			
Acetone	10.2	102	10.4	104	10.0	2.6	ppbv			
1,1-Dichloroethene	10.5	105	10.6	106	10.0	0.3	ppbv			
Trichlorotrifluoroethane (F-113)	9.9	99.1	10.0	99.5	10.0	0.4	ppbv			
Methylene Chloride	10.3	103	10.4	104	10.0	1.4	ppbv			
trans-1,2-Dichloroethene	9.6	95.8	9.7	96.7	10.0	0.9	ppbv			
1,1-Dichloroethane	10.2	102	10.1	101	10.0	1.0	ppbv			
2-Butanone (MEK)	10.3	103	10.4	104	10.0	0.8	ppbv			
cis-1,2-Dichloroethene	9.8	97.8	9.9	99.1	10.0	1.3	ppbv			
Chloroform	10.2	102	10.0	100	10.0	2.0	ppbv			
Tetrahydrofuran	10.6	106	10.3	103	10.0	3.2	ppbv			
1,2-Dichloroethane	10.2	102	10.0	99.6	10.0	2.7	ppbv			
Benzene	10.0	99.9	9.8	97.5	10.0	2.4	ppbv			
Trichloroethene	9.4	94.1	9.3	92.6	10.0	1.6	ppbv			
Toluene	9.8	97.6	9.4	94.1	10.0	3.7	ppbv			
Tetrachloroethene	9.4	94.1	9.1	90.6	10.0	3.8	ppbv			
Chlorobenzene	9.3	92.6	9.0	90.2	10.0	2.6	ppbv			
Ethylbenzene	9.9	98.9	9.5	94.8	10.0	4.2	ppbv			
m&p-Xylene	19.6	98.2	19.3	96.4	20.0	1.9	ppbv			
o-Xylene	9.6	95.8	9.5	94.8	10.0	1.0	ppbv			
1,2-Dichlorobenzene	9.3	93.4	9.1	90.5	10.0	3.2	ppbv			
Surr: 4-Bromofluorobenzene	10.4	104	10.5	105		1.2	%REC			
		70-130%		70-130%						

Airtech Environmental Laboratories (AEL) - AZ 0740

4620 E.Elwood St., Suite 13, Phoenix, AZ 85040 480-968-5888 Fax 480-966-1888

Client:	Wood	**Client Sample ID:**	NA
Project:	Cave Creek Landfill	**Project Number:**	14-2017-2034
Lab Order:	18F022	**Collection:**	NA
Lab ID:	Standards	**Matrix:**	Nitrogen

AEL ID#	STD Name	Vendor	SGI Order#	Description	CONC.	Accuracy	Exp.Date
S-170623-01	Stock	Spectra Gases	113123527	TO-14 39 Analytes	1.0 ppmv	5%	7/23/2018
S-170824-01	Stock	Spectra Gases	113123527	TO-15 25 Analytes	1.0 ppmv	5%	8/24/2018
S-170623-02	Stock	Spectra Gases	113123527	15 Additional Compounds	1.0 ppmv	5%	7/23/2018
S-171019-01	Stock	Spectra Gases	114560630	TO-15 IS 4 Compounds	1.0 ppmv	5%	10/19/2018
A-180621-01	Working Std	AEL Dilution		TO-15 74 Analytes	10 ppbv	5%	7/23/2018
A-180619-01	Working IS	AEL Dilution		TO-15 IS 4 Compounds	50 ppbv	5%	9/19/2018

Airtech Environmental Laboratories (AEL)

Chain of Custody

4620 E.Elwood Street, Suite 13, Phoenix, AZ 85040 480-968-5888 (phone) 480-966-1888 (fax)

Customer : Wood.	Page 1 of 2		AEL Lab #
Address: 4600 East Washington Street, Suite #600	Sampler: Eric Miller	Phone: (602) 300-8313	18F022
	Project Name: Cave Creek Landfill	Project Number: 14-2017-2034	
City, State, Zip: Phoenix, AZ 85034	Project location: Cave Creek, AZ		
Contact: ~~Emily Corkery~~ / Samantha Sargent NATALIE CHRISMAN	P.O. Number:		
Phone: (602) 733-6000 Fax: (602) 733-6100	Fax Results: Y N		
E-Mail Address: Emily.Corkery@amecfw.com	E-Mail Results: (Y) N		

Sample Receipt

Temperature_____ °C
Custody Seals: Yes_____ No_____
Custody Seals Intact: Yes_____ No_____
Total # of Containers:_____

Turn Around Request

_____ 24 Hours _____ 48 Hours
_____ 72 Hours
_____ 5 working Day
X Standard 10 Working Days

Sample Type

SVE: soil vapor extraction
A: ambient air
I: indoor air
S: soil vapor
W: water
GW: ground water
WW: waste water

Analyses Requested

Sample Information

AEL Lab #	Serial # Canister	Serial # Grab	Canister (L) or bag	Grab (Min)	Client's Sample Identification	Sampled Date	Sampled Time	Sample Type	Number of Containers	~~TO-15 full list~~ (SHORT LIST)	TO-15 TPH(GRO)	TO-15 Selet List	8260B AZ Vapor full list	8260B Vapor select list	8015 GRO	8260B Water			DFA tracer cmpd. as TIC
01	E2387	009	6 (1) bag	(1) 2 5	MW10-SG-060618	6.6.18	1101	S	1	X									X
02	E2407	037	6 (1) bag	(1) 2 5	MW-10S-SG-060618	↓	1119	↓	↓	X									X
03	E2366	031	6 (1) bag	(1) 2 5	MW-10M-SG-060618	↓	1146	↓	↓	X									X
04	1819	207	6 (1) bag	(1) 2 5	MW-10D-SG-060618	↓	1206	↓	↓	X									X
05	E2289	047	6 (1) bag	(1) 2 5	MW-9-SG-060818	6.8.18	856	↓	↓	X									X
06	E2363	190	6 (1) bag	(1) 2 5	MW-9S-SG-060818	↓	914	↓	↓	X									X
07	E2360	201	6 (1) bag	(1) 2 5	MW-9M-SG-060818	↓	937	↓	↓	X									X
08	E2374	012	6 (1) bag	(1) 2 5	MW-9D-SG-060818	↓	1006	↓	↓	X									X
09	E2350	086	6 (1) bag	(1) 2 5	TSSV-3D-SG-061118	6.11.18	1006	↓	↓	X									X
10	E2372	137	6 (1) bag	(1) 2 5	TSSV-3PZ-SG-061118	↓	1047	↓	↓	X									X

Instructions / Special Requirements:

Date:	Time:	Samples Relinquished By:	Received By:
6.14.18	1130	E. Miller	James Jones - Airtech

Airtech Environmental Laboratories (AEL)

Chain of Custody

4620 E.Elwood Street, Suite 13, Phoenix, AZ 85040 480-968-5888 (phone) 480-966-1888 (fax)

Customer : Wood.	Page 2 of 2		AEL Lab #
Address: 4600 East Washington Street, Suite #600	Sampler: Eric Miller	Phone: (602) 300-8313	18F022
	Project Name: Cave Creek Landfill	Project Number: 14-2017-2034	
City, State, Zip: Phoenix, AZ 85034	Project location: Cave Creek, AZ		
Contact: ~~Emily Corkery~~ / Samantha Sargent	P.O. Number:		
Phone: (602) 733-6000 Fax: (602) 733-6100	Fax Results: Y N		
E-Mail Address: ~~Emily.Corkery~~@amecfw.com	E-Mail Results: Y N		

Sample Receipt	Turn Around Request	Sample Type
Temperature_____ °C	____ 24 Hours ____ 48 Hours	SVE: soil vapor extraction GW: ground water
Custody Seals: Yes_____ No_____	____ 72 Hours	A: ambient air WW: waste water
Custody Seals Intact: Yes_____ No_____	____ 5 working Day	I: indoor air
Total # of Containers:_____	Y Standard 10 Working Days	S: soil vapor
		W: water

Sample Information

AEL Lab #	Serial # Canister	Serial # Grab	Canister (L) or bag	Grab (Min)	Client's Sample Identification	Sampled Date	Sampled Time	Sample Type	Number of Containers	TO-15 full list (SHORT LIST)	TO-15 TPH(GRO)	TO-15 Selet List	8260B AZ Vapor full list	8260B Vapor select list	8015 GRO	8260B Water			DFA tracer cmpd. as TIC
11	E2283	041	6 1 bag	1 2 5	TSSV-5D-S6-061118	6.11.18	1206	S	1	Y									Y
12	E2281	007	6 1 bag	1 2 5	TSSV-5PZ-S6-061118	↓	1311			Y									Y
13	1815	117	6 1 bag	1 2 5	TSSV-6S-S6-061318	6.13.18	846			Y									Y
14	1807	091	6 1 bag	1 2 5	TSSV-6M-S6-061318		912			Y									Y
15	1822	092	6 1 bag	1 2 5	TSSV-6D-S6-061318		936			Y									Y
16	0265	195	6 1 bag	1 2 5	TSSV-7S-S6-061318		1036			Y									Y
17	1879	198	6 1 bag	1 2 5	TSSV-7M-S6-061318		1101			Y									Y
18	1856	164	6 1 bag	1 2 5	TSSV-7D-S6-061318		1124			Y									Y
19	1857	024	6 1 bag	1 2 5	TSSV-7PZ-S6-061318		1233			Y									Y
20	1863	053	6 1 bag	1 2 5	DUP01-061318	↓	1315	↓	↓	Y									Y

Instructions / Special Requirements:

Date:	Time:	Samples Relinquished By:	Received By:
6.14.18	1130	E. Miller	James Jones - Airtech

Airtech Environmental Laboratories (AEL)
4620 E.Elwood St., Suite 13, Phoenix, AZ 85040 480-968-5888 Fax 480-966-1888

Date: July 7, 2018

Client:	Natalie Chrisman	Work Order #:	18F027
Company:	WOOD	Project Name:	Cave Creek Landfill
Address:	4600 E Washington St, #600	Project Number:	14-2014-2034
	Phoenix, AZ 85034	Received Date:	6/20/2018

Dear Client:

Airtech Environmental Laboratories received twenty-seven (27) samples for analysis.

All analyses met laboratory QA/QC with any exceptions addressed in the Case Narrative.

If you have any questions or concerns regarding your samples analysis, please contact the laboratory at 480-968-5888

Sincerely,

Yu Min Shi
Technical Director
Airtech Environmental Labs

Arizona ADHS License No. AZ0740

Airtech Environmental Laboratories (AEL)

4620 E.Elwood St., Suite 13, Phoenix, AZ 85040 480-968-5888 Fax 480-966-1888

Date: July 7, 2018

Client:	Natalie Chrisman	Work Order #:	18F027
Company:	WOOD	Project Name:	Cave Creek Landfill
Address:	4600 E Washington St, #600	Project Number:	14-2014-2034
	Phoenix, AZ 85034	Received Date:	6/20/2018

SAMPLE SUMMARY

LAB ID	CLIENT ID	METHOD	SAMPLE DATE	SAMPLE TIME
18F027-01	TSSV-2S-SG-061518	TO-15	6/15/2018	855
18F027-02	TSSV-2M-SG-061518	TO-15	6/15/2018	919
18F027-03	TSSV-2D-SG-061518	TO-15	6/15/2018	946
18F027-04	TSSV-2PZ-SG-061518	TO-15	6/15/2018	1011
18F027-05	TSSV-1S-SG-061518	TO-15	6/15/2018	1051
18F027-06	TSSV-1M-SG-061518	TO-15	6/15/2018	1114
18F027-07	TSSV-1D-SG-061518	TO-15	6/15/2018	1141
18F027-08	TSSV-4M-SG-061518	TO-15	6/15/2018	1241
18F027-09	TSSV-4PZ-SG-061518	TO-15	6/15/2018	1322
18F027-10	Dup02-061518	TO-15	6/15/2018	1350
18F027-11	TSSV-4D-SG-061818	TO-15	6/18/2018	1038
18F027-12	Dup03-061818	TO-15	6/18/2018	1055
18F027-13	SVE-1S-SG-061818	TO-15	6/18/2018	1205
18F027-14	SVE-1M-SG-061818	TO-15	6/18/2018	1226
18F027-15	SVE-1D-SG-061818	TO-15	6/18/2018	1256
18F027-16	SVE-2S-SG-062018	TO-15	6/20/2018	800
18F027-17	SVE-2M-SG-062018	TO-15	6/20/2018	826
18F027-18	SVE-3S-SG-062018	TO-15	6/20/2018	852
18F027-19	SVE-3M-SG-062018	TO-15	6/20/2018	923
18F027-20	SVE-3-SG-062018	TO-15	6/20/2018	949
18F027-21	SVE-4S-SG-062018	TO-15	6/20/2018	1025
18F027-22	SVE-4M-SG-062018	TO-15	6/20/2018	1101
18F027-23	SVE-4-SG-062018	TO-15	6/20/2018	1120
18F027-24	Dup04-062018	TO-15	6/20/2018	1137
18F027-25	SVE-2-SG-062018	TO-15	6/20/2018	1150
18F027-26	TSSV-PW-SG-062018	TO-15	6/20/2018	1216
18F027-27	SVE-1-SG-062018	TO-15	6/20/2018	1240

Airtech Environmental Laboratories (AEL)
4620 E.Elwood St., Suite 13, Phoenix, AZ 85040 480-968-5888 Fax 480-966-1888

Date: July 7, 2018

Client:	Natalie Chrisman	Work Order #:	18F027
Company:	WOOD	Project Name:	Cave Creek Landfill
Address:	4600 E Washington St, #600	Project Number:	14-2014-2034
	Phoenix, AZ 85034	Received Date:	06/20/18

Case Narrative

All samples and QC associated with your samples met the quality control objectives.
Data qualifiers in this report are in accordance with ADEQ Data Qualifiers.

Airtech Environmental Laboratories (AEL) - AZ 0740
4620 E.Elwood St., Suite 13, Phoenix, AZ 85040 480-968-5888 Fax 480-966-1888

Client:	WOOD	**Client Sample ID:**	N/A
Project:	Cave Creek Landfill	**Project Number:**	14-2014-2034
Lab Order:	18F027	**Collection:**	N/A
Lab ID:	Kits QC	**Matrix:**	Air

		Canister				Grab Sampler	
		Type		Vacuum	Pressure	Type	
	Client	1.0 liter		before sampled	after sampled	1 minute-fill 1.0L canister	
AEL#	ID	SN#	Clean Batch#	Hg inch	psia	SN#	Clean Batch#
18F027-01	TSSV-2S-SG-061518	1793	1806-02	29.0	13.40	023	1803-07
18F027-02	TSSV-2M-SG-061518	E2405	1806-04	29.0	13.42	107	1803-09
18F027-03	TSSV-2D-SG-061518	E2413	1806-03	29.0	13.23	062	1803-13
18F027-04	TSSV-2PZ-SG-061518	E2099	1806-04	29.0	12.80	123	1803-13
18F027-05	TSSV-1S-SG-061518	E2280	1806-07	29.0	13.13	022	1803-13
18F027-06	TSSV-1M-SG-061518	1838	1805-06	29.0	13.40	072	1803-13
18F027-07	TSSV-1D-SG-061518	0743	1804-17	29.0	13.24	048	1803-13
18F027-08	TSSV-4M-SG-061518	1826	1805-04	29.0	13.30	197	1803-13
18F027-09	TSSV-4PZ-SG-061518	1887	1806-01	29.0	13.46	144	1803-13
18F027-10	Dup02-061518	1851	1806-04	29.0	13.43	035	1803-13
18F027-11	TSSV-4D-SG-061818	E2369	1806-05	29.0	12.86	030	1803-13
18F027-12	Dup03-061818	1791	1806-04	29.0	12.74	105	1803-13
18F027-13	SVE-1S-SG-061818	E2090	1804-12	29.0	13.14	191	1803-13
18F027-14	SVE-1M-SG-061818	E2087	1806-07	29.0	13.07	117	1803-13
18F027-15	SVE-1D-SG-061818	E2291	1806-07	29.0	13.04	104	1803-13
18F027-16	SVE-2S-SG-062018	E2299	1806-14	29.0	13.46	193	1805-03
18F027-17	SVE-2M-SG-062018	E2293	1806-14	29.0	13.36	063	1805-03
18F027-18	SVE-3S-SG-062018	1847	1806-14	29.0	13.24	028	1805-03
18F027-19	SVE-3M-SG-062018	E2411	1806-14	29.0	13.00	046	1805-03
18F027-20	SVE-3-SG-062018	E2399	1806-07	29.0	12.76	158	1805-03

Airtech Environmental Laboratories (AEL) - AZ 0740
4620 E.Elwood St., Suite 13, Phoenix, AZ 85040 480-968-5888 Fax 480-966-1888

Client:	WOOD	**Client Sample ID:**	N/A
Project:	Cave Creek Landfill	**Project Number:**	14-2014-2034
Lab Order:	18F027	**Collection:**	N/A
Lab ID:	Kits QC	**Matrix:**	Air

		Canister				Grab Sampler	
		Type		Vacuum	Pressure	Type	
	Client	1.0 liter		before sampled	after sampled	1 minute-fill 1.0L canister	
AEL#	ID	SN#	Clean Batch#	Hg inch	psia	SN#	Clean Batch#
18F027-21	SVE-4S-SG-062018	1885	1805-06	29.0	13.28	075	1803-13
18F027-22	SVE-4M-SG-062018	E2376	1806-07	29.0	12.34	021	1803-13
18F027-23	SVE-4-SG-062018	E2351	1806-05	29.0	12.44	199	1803-09
18F027-24	Dup04-062018	E2361	1806-04	29.0	12.62	135	1803-09
18F027-25	SVE-2-SG-062018	E2085	1806-05	29.0	12.30	194	1803-09
18F027-26	TSSV-PW-SG-062018	E2367	1806-05	29.0	11.75	065	1803-09
18F027-27	SVE-1-SG-062018	E2358	1806-05	29.0	11.80	196	1803-09

Airtech Environmental Laboratories (AEL) - AZ 0740

4620 E.Elwood St., Suite 13, Phoenix, AZ 85040 480-968-5888 Fax 480-966-1888

Client:	WOOD	**Client Sample ID:**	TSSV-2S-SG-061518
Project:	Cave Creek Landfill	**Project Number:**	14-2014-2034
Lab Order:	18F027	**Collection:**	6/15/2018
Lab ID:	01	**Matrix:**	Soil vapor

	ppbv		ug/M^3				Date	
Analyses	**Result**	**Limit**	**Result**	**Limit**	**Qual**	**DF**	**Analyzed**	**CAS#**
VOLATILE ORGANICS IN AIR	**TO-15**						Analyst: JJ	
1,1-Dichloroethane	< 100	100	< 405	405		200	6/26/2018	75-34-3
1,1-Dichloroethene	< 100	100	< 397	397		200	6/26/2018	75-35-4
1,2-Dichlorobenzene	< 100	100	< 601	601		200	6/26/2018	95-50-1
1,2-Dichloroethane	< 100	100	< 405	405		200	6/26/2018	107-06-2
2-Butanone (MEK)	< 1,000	1,000	< 2,950	2,950		200	6/26/2018	78-93-3
Acetone	< 1,000	1,000	< 2,380	2,380		200	6/26/2018	67-64-1
Benzene	< 100	100	< 319	319		200	6/26/2018	71-43-2
Chlorobenzene	< 100	100	< 460	460		200	6/26/2018	108-90-7
Chloroform	< 100	100	< 488	488		200	6/26/2018	67-66-3
cis-1,2-Dichloroethene	< 100	100	< 396	396		200	6/26/2018	156-59-2
Dichlorodifluoromethane(F-12)	< 200	200	< 990	990		200	6/26/2018	75-71-8
Ethylbenzene	< 100	100	< 434	434		200	6/26/2018	100-41-4
m&p-Xylene	< 200	200	< 868	868		200	6/26/2018	179601-23-1
Methylene chloride	< 400	400	< 1,390	1,390		200	6/26/2018	75-09-2
o-Xylene	< 100	100	< 434	434		200	6/26/2018	95-47-6
Tetrachloroethene	**264**	**200**	**1,790**	**1,360**		200	6/26/2018	127-18-4
Tetrahydrofuran	**1,270**	**400**	**3,740**	**1,180**		200	6/26/2018	109-99-9
Toluene	< 100	100	< 377	377		200	6/26/2018	108-88-3
trans-1,2-Dichloroethene	< 100	100	< 396	396		200	6/26/2018	156-60-5
Trichloroethene	**2,750**	**100**	**14,800**	**537**		200	6/26/2018	79-01-6
Trichlorofluoromethane(F-11)	< 100	100	< 562	562		200	6/26/2018	75-69-4
Trichlorotrifluoroethane(F-113)	< 100	100	< 766	766		200	6/26/2018	76-13-1
Vinyl chloride	< 100	100	< 256	256		200	6/26/2018	75-01-4
Surr: 4-Bromofluorobenzene	97.4	70-130	%REC					

Airtech Environmental Laboratories (AEL) - AZ 0740

4620 E.Elwood St., Suite 13, Phoenix, AZ 85040 480-968-5888 Fax 480-966-1888

Client:	WOOD	**Client Sample ID:**	TSSV-2M-SG-061518
Project:	Cave Creek Landfill	**Project Number:**	14-2014-2034
Lab Order:	18F027	**Collection:**	6/15/2018
Lab ID:	02	**Matrix:**	Soil vapor

	ppbv		ug/M^3				Date	
Analyses	**Result**	**Limit**	**Result**	**Limit**	**Qual**	**DF**	**Analyzed**	**CAS#**
VOLATILE ORGANICS IN AIR		**TO-15**					Analyst: JJ	
1,1-Dichloroethane	< 10	10	< 40.5	40.5		20	6/26/2018	75-34-3
1,1-Dichloroethene	**42**	**10**	**166**	**39.7**		20	6/26/2018	75-35-4
1,2-Dichlorobenzene	< 10	10	< 60.1	60.1		20	6/26/2018	95-50-1
1,2-Dichloroethane	< 10	10	< 40.5	40.5		20	6/26/2018	107-06-2
2-Butanone (MEK)	< 100	100	< 295	295		20	6/26/2018	78-93-3
Acetone	< 100	100	< 238	238		20	6/26/2018	67-64-1
Benzene	< 10	10	< 31.9	31.9		20	6/26/2018	71-43-2
Chlorobenzene	< 10	10	< 46.0	46.0		20	6/26/2018	108-90-7
Chloroform	< 10	10	< 48.8	48.8		20	6/26/2018	67-66-3
cis-1,2-Dichloroethene	< 10	10	< 39.6	39.6		20	6/26/2018	156-59-2
Dichlorodifluoromethane(F-12)	< 20	20	< 99.0	99.0		20	6/26/2018	75-71-8
Ethylbenzene	< 10	10	< 43.4	43.4		20	6/26/2018	100-41-4
m&p-Xylene	< 20	20	< 86.8	86.8		20	6/26/2018	179601-23-1
Methylene chloride	< 40	40	< 139	139		20	6/26/2018	75-09-2
o-Xylene	< 10	10	< 43.4	43.4		20	6/26/2018	95-47-6
Tetrachloroethene	**29**	**20**	**194**	**136**		20	6/26/2018	127-18-4
Tetrahydrofuran	**365**	**40**	**1,080**	**118**		20	6/26/2018	109-99-9
Toluene	< 10	10	< 37.7	37.7		20	6/26/2018	108-88-3
trans-1,2-Dichloroethene	< 10	10	< 39.6	39.6		20	6/26/2018	156-60-5
Trichloroethene	**1,960**	**100**	**10,500**	**537**		200	6/26/2018	79-01-6
Trichlorofluoromethane(F-11)	< 10	10	< 56.2	56.2		20	6/26/2018	75-69-4
Trichlorotrifluoroethane(F-113)	**59**	**10**	**453**	**76.6**		20	6/26/2018	76-13-1
Vinyl chloride	< 10	10	< 25.6	25.6		20	6/26/2018	75-01-4
Surr: 4-Bromofluorobenzene	98.1	70-130	%REC					

Airtech Environmental Laboratories (AEL) - AZ 0740

4620 E.Elwood St., Suite 13, Phoenix, AZ 85040 480-968-5888 Fax 480-966-1888

Client:	WOOD	**Client Sample ID:**	TSSV-2D-SG-061518
Project:	Cave Creek Landfill	**Project Number:**	14-2014-2034
Lab Order:	18F027	**Collection:**	6/15/2018
Lab ID:	03	**Matrix:**	Soil vapor

	ppbv		ug/M^3				Date	
Analyses	**Result**	**Limit**	**Result**	**Limit**	**Qual**	**DF**	**Analyzed**	**CAS#**
VOLATILE ORGANICS IN AIR	**TO-15**						Analyst: JJ	
1,1-Dichloroethane	< 250	250	< 1,010	1,010		500	6/27/2018	75-34-3
1,1-Dichloroethene	< 250	250	< 993	993		500	6/27/2018	75-35-4
1,2-Dichlorobenzene	< 250	250	< 1,500	1,500		500	6/27/2018	95-50-1
1,2-Dichloroethane	< 250	250	< 1,010	1,010		500	6/27/2018	107-06-2
2-Butanone (MEK)	< 2,500	2,500	< 7,380	7,380		500	6/27/2018	78-93-3
Acetone	< 2,500	2,500	< 5,950	5,950		500	6/27/2018	67-64-1
Benzene	< 250	250	< 798	798		500	6/27/2018	71-43-2
Chlorobenzene	**350**	**250**	**1,610**	**1,150**		500	6/27/2018	108-90-7
Chloroform	< 250	250	< 1,220	1,220		500	6/27/2018	67-66-3
cis-1,2-Dichloroethene	**1,290**	**250**	**5,110**	**990**		500	6/27/2018	156-59-2
Dichlorodifluoromethane(F-12)	< 500	500	< 2,480	2,480		500	6/27/2018	75-71-8
Ethylbenzene	< 250	250	< 1,090	1,090		500	6/27/2018	100-41-4
m&p-Xylene	< 500	500	< 2,170	2,170		500	6/27/2018	179601-23-1
Methylene chloride	< 1,000	1,000	< 3,470	3,470		500	6/27/2018	75-09-2
o-Xylene	< 250	250	< 1,090	1,090		500	6/27/2018	95-47-6
Tetrachloroethene	< 500	500	< 3,390	3,390		500	6/27/2018	127-18-4
Tetrahydrofuran	< 1,000	1,000	< 2,950	2,950		500	6/27/2018	109-99-9
Toluene	< 250	250	< 943	943		500	6/27/2018	108-88-3
trans-1,2-Dichloroethene	< 250	250	< 990	990		500	6/27/2018	156-60-5
Trichloroethene	**12,000**	**250**	**64,400**	**1,340**		500	6/27/2018	79-01-6
Trichlorofluoromethane(F-11)	< 250	250	< 1,410	1,410		500	6/27/2018	75-69-4
Trichlorotrifluoroethane(F-113)	**630**	**250**	**4,830**	**1,920**		500	6/27/2018	76-13-1
Vinyl chloride	< 250	250	< 640	640		500	6/27/2018	75-01-4
Surr: 4-Bromofluorobenzene	94.9	70-130	%REC					

Airtech Environmental Laboratories (AEL) - AZ 0740

4620 E.Elwood St., Suite 13, Phoenix, AZ 85040 480-968-5888 Fax 480-966-1888

Client:	WOOD	**Client Sample ID:**	TSSV-2PZ-SG-061518
Project:	Cave Creek Landfill	**Project Number:**	14-2014-2034
Lab Order:	18F027	**Collection:**	6/15/2018
Lab ID:	04	**Matrix:**	Soil vapor

	ppbv		ug/M^3				Date	
Analyses	**Result**	**Limit**	**Result**	**Limit**	**Qual**	**DF**	**Analyzed**	**CAS#**
VOLATILE ORGANICS IN AIR	**TO-15**						Analyst: JJ	
1,1-Dichloroethane	< 10	10	< 40.5	40.5		20	6/27/2018	75-34-3
1,1-Dichloroethene	**46**	**10**	**181**	**39.7**		20	6/27/2018	75-35-4
1,2-Dichlorobenzene	< 10	10	< 60.1	60.1		20	6/27/2018	95-50-1
1,2-Dichloroethane	< 10	10	< 40.5	40.5		20	6/27/2018	107-06-2
2-Butanone (MEK)	< 100	100	< 295	295		20	6/27/2018	78-93-3
Acetone	< 100	100	< 238	238		20	6/27/2018	67-64-1
Benzene	< 10	10	< 31.9	31.9		20	6/27/2018	71-43-2
Chlorobenzene	< 10	10	< 46.0	46.0		20	6/27/2018	108-90-7
Chloroform	< 10	10	< 48.8	48.8		20	6/27/2018	67-66-3
cis-1,2-Dichloroethene	**218**	**10**	**863**	**39.6**		20	6/27/2018	156-59-2
Dichlorodifluoromethane(F-12)	< 20	20	< 99.0	99.0		20	6/27/2018	75-71-8
Ethylbenzene	< 10	10	< 43.4	43.4		20	6/27/2018	100-41-4
m&p-Xylene	< 20	20	< 86.8	86.8		20	6/27/2018	179601-23-1
Methylene chloride	< 40	40	< 139	139		20	6/27/2018	75-09-2
o-Xylene	< 10	10	< 43.4	43.4		20	6/27/2018	95-47-6
Tetrachloroethene	**282**	**20**	**1,910**	**136**		20	6/27/2018	127-18-4
Tetrahydrofuran	< 40	40	< 118	118		20	6/27/2018	109-99-9
Toluene	< 10	10	< 37.7	37.7		20	6/27/2018	108-88-3
trans-1,2-Dichloroethene	< 10	10	< 39.6	39.6		20	6/27/2018	156-60-5
Trichloroethene	**428**	**10**	**2,300**	**53.7**		20	6/27/2018	79-01-6
Trichlorofluoromethane(F-11)	< 10	10	< 56.2	56.2		20	6/27/2018	75-69-4
Trichlorotrifluoroethane(F-113)	< 10	10	< 76.6	76.6		20	6/27/2018	76-13-1
Vinyl chloride	< 10	10	< 25.6	25.6		20	6/27/2018	75-01-4
Surr: 4-Bromofluorobenzene	97.2	70-130	%REC					

Airtech Environmental Laboratories (AEL) - AZ 0740

4620 E.Elwood St., Suite 13, Phoenix, AZ 85040 480-968-5888 Fax 480-966-1888

Client:	WOOD	**Client Sample ID:**	TSSV-1S-SG-061518
Project:	Cave Creek Landfill	**Project Number:**	14-2014-2034
Lab Order:	18F027	**Collection:**	6/15/2018
Lab ID:	05	**Matrix:**	Soil vapor

	ppbv		ug/M^3				Date	
Analyses	**Result**	**Limit**	**Result**	**Limit**	**Qual**	**DF**	**Analyzed**	**CAS#**
VOLATILE ORGANICS IN AIR	**TO-15**						Analyst: JJ	
1,1-Dichloroethane	< 100	100	< 405	405		200	6/26/2018	75-34-3
1,1-Dichloroethene	< 100	100	< 397	397		200	6/26/2018	75-35-4
1,2-Dichlorobenzene	< 100	100	< 601	601		200	6/26/2018	95-50-1
1,2-Dichloroethane	< 100	100	< 405	405		200	6/26/2018	107-06-2
2-Butanone (MEK)	< 1,000	1,000	< 2,950	2,950		200	6/26/2018	78-93-3
Acetone	< 1,000	1,000	< 2,380	2,380		200	6/26/2018	67-64-1
Benzene	< 100	100	< 319	319		200	6/26/2018	71-43-2
Chlorobenzene	< 100	100	< 460	460		200	6/26/2018	108-90-7
Chloroform	< 100	100	< 488	488		200	6/26/2018	67-66-3
cis-1,2-Dichloroethene	**148**	**100**	**586**	**396**		200	6/26/2018	156-59-2
Dichlorodifluoromethane(F-12)	< 200	200	< 990	990		200	6/26/2018	75-71-8
Ethylbenzene	< 100	100	< 434	434		200	6/26/2018	100-41-4
m&p-Xylene	< 200	200	< 868	868		200	6/26/2018	179601-23-1
Methylene chloride	< 400	400	< 1,390	1,390		200	6/26/2018	75-09-2
o-Xylene	< 100	100	< 434	434		200	6/26/2018	95-47-6
Tetrachloroethene	**236**	**200**	**1,600**	**1,360**		200	6/26/2018	127-18-4
Tetrahydrofuran	< 400	400	< 1,180	1,180		200	6/26/2018	109-99-9
Toluene	< 100	100	< 377	377		200	6/26/2018	108-88-3
trans-1,2-Dichloroethene	< 100	100	< 396	396		200	6/26/2018	156-60-5
Trichloroethene	**3,750**	**100**	**20,100**	**537**		200	6/26/2018	79-01-6
Trichlorofluoromethane(F-11)	< 100	100	< 562	562		200	6/26/2018	75-69-4
Trichlorotrifluoroethane(F-113)	< 100	100	< 766	766		200	6/26/2018	76-13-1
Vinyl chloride	< 100	100	< 256	256		200	6/26/2018	75-01-4
Surr: 4-Bromofluorobenzene	96.6	70-130	%REC					

Airtech Environmental Laboratories (AEL) - AZ 0740

4620 E.Elwood St., Suite 13, Phoenix, AZ 85040 480-968-5888 Fax 480-966-1888

Client:	WOOD	**Client Sample ID:**	TSSV-1M-SG-061518
Project:	Cave Creek Landfill	**Project Number:**	14-2014-2034
Lab Order:	18F027	**Collection:**	6/15/2018
Lab ID:	06	**Matrix:**	Soil vapor

	ppbv		ug/M^3				Date	
Analyses	**Result**	**Limit**	**Result**	**Limit**	**Qual**	**DF**	**Analyzed**	**CAS#**
VOLATILE ORGANICS IN AIR	**TO-15**						Analyst: JJ	
1,1-Dichloroethane	< 100	100	< 405	405		200	6/27/2018	75-34-3
1,1-Dichloroethene	**328**	**100**	**1,300**	**397**		200	6/27/2018	75-35-4
1,2-Dichlorobenzene	< 100	100	< 601	601		200	6/27/2018	95-50-1
1,2-Dichloroethane	< 100	100	< 405	405		200	6/27/2018	107-06-2
2-Butanone (MEK)	< 1,000	1,000	< 2,950	2,950		200	6/27/2018	78-93-3
Acetone	< 1,000	1,000	< 2,380	2,380		200	6/27/2018	67-64-1
Benzene	**140**	**100**	**447**	**319**		200	6/27/2018	71-43-2
Chlorobenzene	**2,580**	**100**	**11,900**	**460**		200	6/27/2018	108-90-7
Chloroform	**252**	**100**	**1,230**	**488**		200	6/27/2018	67-66-3
cis-1,2-Dichloroethene	**216**	**100**	**855**	**396**		200	6/27/2018	156-59-2
Dichlorodifluoromethane(F-12)	< 200	200	< 990	990		200	6/27/2018	75-71-8
Ethylbenzene	< 100	100	< 434	434		200	6/27/2018	100-41-4
m&p-Xylene	< 200	200	< 868	868		200	6/27/2018	179601-23-1
Methylene chloride	< 400	400	< 1,390	1,390		200	6/27/2018	75-09-2
o-Xylene	< 100	100	< 434	434		200	6/27/2018	95-47-6
Tetrachloroethene	**960**	**200**	**6,510**	**1,360**		200	6/27/2018	127-18-4
Tetrahydrofuran	**4,040**	**400**	**11,900**	**1,180**		200	6/27/2018	109-99-9
Toluene	< 100	100	< 377	377		200	6/27/2018	108-88-3
trans-1,2-Dichloroethene	< 100	100	< 396	396		200	6/27/2018	156-60-5
Trichloroethene	**7,760**	**500**	**41,700**	**2,690**		1,000	6/26/2018	79-01-6
Trichlorofluoromethane(F-11)	< 100	100	< 562	562		200	6/27/2018	75-69-4
Trichlorotrifluoroethane(F-113)	**138**	**100**	**1,060**	**766**		200	6/27/2018	76-13-1
Vinyl chloride	< 100	100	< 256	256		200	6/27/2018	75-01-4
Surr: 4-Bromofluorobenzene	98.6	70-130	%REC					

Airtech Environmental Laboratories (AEL) - AZ 0740

4620 E.Elwood St., Suite 13, Phoenix, AZ 85040 480-968-5888 Fax 480-966-1888

Client:	WOOD	**Client Sample ID:**	TSSV-1D-SG-061518
Project:	Cave Creek Landfill	**Project Number:**	14-2014-2034
Lab Order:	18F027	**Collection:**	6/15/2018
Lab ID:	07	**Matrix:**	Soil vapor

	ppbv		ug/M^3				Date	
Analyses	**Result**	**Limit**	**Result**	**Limit**	**Qual**	**DF**	**Analyzed**	**CAS#**
VOLATILE ORGANICS IN AIR	**TO-15**						Analyst: JJ	
1,1-Dichloroethane	< 1,000	1,000	< 4,050	4,050		2,000	6/26/2018	75-34-3
1,1-Dichloroethene	**1,980**	**1,000**	**7,860**	**3,970**		2,000	6/26/2018	75-35-4
1,2-Dichlorobenzene	< 1,000	1,000	< 6,010	6,010		2,000	6/26/2018	95-50-1
1,2-Dichloroethane	< 1,000	1,000	< 4,050	4,050		2,000	6/26/2018	107-06-2
2-Butanone (MEK)	< 10,000	10,000	< 29,500	29,500		2,000	6/26/2018	78-93-3
Acetone	< 10,000	10,000	< 23,800	23,800		2,000	6/26/2018	67-64-1
Benzene	< 1,000	1,000	< 3,190	3,190		2,000	6/26/2018	71-43-2
Chlorobenzene	< 1,000	1,000	< 4,600	4,600		2,000	6/26/2018	108-90-7
Chloroform	< 1,000	1,000	< 4,880	4,880		2,000	6/26/2018	67-66-3
cis-1,2-Dichloroethene	**5,620**	**1,000**	**22,300**	**3,960**		2,000	6/26/2018	156-59-2
Dichlorodifluoromethane(F-12)	< 2,000	2,000	< 9,900	9,900		2,000	6/26/2018	75-71-8
Ethylbenzene	< 1,000	1,000	< 4,340	4,340		2,000	6/26/2018	100-41-4
m&p-Xylene	< 2,000	2,000	< 8,680	8,680		2,000	6/26/2018	179601-23-1
Methylene chloride	**4,500**	**4,000**	**15,600**	**13,900**		2,000	6/26/2018	75-09-2
o-Xylene	< 1,000	1,000	< 4,340	4,340		2,000	6/26/2018	95-47-6
Tetrachloroethene	**2,020**	**2,000**	**13,700**	**13,600**		2,000	6/26/2018	127-18-4
Tetrahydrofuran	< 4,000	4,000	< 11,800	11,800		2,000	6/26/2018	109-99-9
Toluene	< 1,000	1,000	< 3,770	3,770		2,000	6/26/2018	108-88-3
trans-1,2-Dichloroethene	< 1,000	1,000	< 3,960	3,960		2,000	6/26/2018	156-60-5
Trichloroethene	**64,500**	**1,000**	**346,000**	**5,370**		2,000	6/26/2018	79-01-6
Trichlorofluoromethane(F-11)	< 1,000	1,000	< 5,620	5,620		2,000	6/26/2018	75-69-4
Trichlorotrifluoroethane(F-113)	**21,700**	**1,000**	**166,000**	**7,660**		2,000	6/26/2018	76-13-1
Vinyl chloride	< 1,000	1,000	< 2,560	2,560		2,000	6/26/2018	75-01-4
Surr: 4-Bromofluorobenzene	96.4	70-130	%REC					

Airtech Environmental Laboratories (AEL) - AZ 0740

4620 E.Elwood St., Suite 13, Phoenix, AZ 85040 480-968-5888 Fax 480-966-1888

Client:	WOOD	**Client Sample ID:**	TSSV-4M-SG-061518
Project:	Cave Creek Landfill	**Project Number:**	14-2014-2034
Lab Order:	18F027	**Collection:**	6/15/2018
Lab ID:	08	**Matrix:**	Soil vapor

	ppbv		ug/M^3				Date	
Analyses	**Result**	**Limit**	**Result**	**Limit**	**Qual**	**DF**	**Analyzed**	**CAS#**
VOLATILE ORGANICS IN AIR		**TO-15**					Analyst: JJ	
1,1-Dichloroethane	< 5.0	5.0	< 20.3	20.3		10	6/30/2018	75-34-3
1,1-Dichloroethene	< 5.0	5.0	< 19.9	19.9		10	6/30/2018	75-35-4
1,2-Dichlorobenzene	**14**	**5.0**	**83.5**	**30.1**		10	6/30/2018	95-50-1
1,2-Dichloroethane	< 5.0	5.0	< 20.3	20.3		10	6/30/2018	107-06-2
2-Butanone (MEK)	< 50	50	< 148	148		10	6/30/2018	78-93-3
Acetone	< 50	50	< 119	119		10	6/30/2018	67-64-1
Benzene	< 5.0	5.0	< 16.0	16.0		10	6/30/2018	71-43-2
Chlorobenzene	**23**	**5.0**	**104**	**23.0**		10	6/30/2018	108-90-7
Chloroform	< 5.0	5.0	< 24.4	24.4		10	6/30/2018	67-66-3
cis-1,2-Dichloroethene	**17**	**5.0**	**68.9**	**19.8**		10	6/30/2018	156-59-2
Dichlorodifluoromethane(F-12)	< 10	10	< 49.5	49.5		10	6/30/2018	75-71-8
Ethylbenzene	< 5.0	5.0	< 21.7	21.7		10	6/30/2018	100-41-4
m&p-Xylene	< 10	10	< 43.4	43.4		10	6/30/2018	179601-23-1
Methylene chloride	< 20	20	< 69.4	69.4		10	6/30/2018	75-09-2
o-Xylene	< 5.0	5.0	< 21.7	21.7		10	6/30/2018	95-47-6
Tetrachloroethene	**134**	**10**	**908**	**67.8**		10	6/30/2018	127-18-4
Tetrahydrofuran	< 20	20	< 59.0	59.0		10	6/30/2018	109-99-9
Toluene	< 5.0	5.0	< 18.9	18.9		10	6/30/2018	108-88-3
trans-1,2-Dichloroethene	< 5.0	5.0	< 19.8	19.8		10	6/30/2018	156-60-5
Trichloroethene	**303**	**5.0**	**1,630**	**26.9**		10	6/30/2018	79-01-6
Trichlorofluoromethane(F-11)	**7.3**	**5.0**	**41.0**	**28.1**		10	6/30/2018	75-69-4
Trichlorotrifluoroethane(F-113)	**13**	**5.0**	**101**	**38.3**		10	6/30/2018	76-13-1
Vinyl chloride	< 5.0	5.0	< 12.8	12.8		10	6/30/2018	75-01-4
Surr: 4-Bromofluorobenzene	84.2	70-130	%REC					

Airtech Environmental Laboratories (AEL) - AZ 0740

4620 E.Elwood St., Suite 13, Phoenix, AZ 85040 480-968-5888 Fax 480-966-1888

Client:	WOOD	**Client Sample ID:**	TSSV-4PZ-SG-061518
Project:	Cave Creek Landfill	**Project Number:**	14-2014-2034
Lab Order:	18F027	**Collection:**	6/15/2018
Lab ID:	09	**Matrix:**	Soil vapor

	ppbv		ug/M^3				Date	
Analyses	**Result**	**Limit**	**Result**	**Limit**	**Qual**	**DF**	**Analyzed**	**CAS#**
VOLATILE ORGANICS IN AIR		**TO-15**					Analyst: JJ	
1,1-Dichloroethane	< 10	10	< 40.5	40.5		20	6/30/2018	75-34-3
1,1-Dichloroethene	**43**	**10**	**170**	**39.7**		20	6/30/2018	75-35-4
1,2-Dichlorobenzene	< 10	10	< 60.1	60.1		20	6/30/2018	95-50-1
1,2-Dichloroethane	< 10	10	< 40.5	40.5		20	6/30/2018	107-06-2
2-Butanone (MEK)	< 100	100	< 295	295		20	6/30/2018	78-93-3
Acetone	< 100	100	< 238	238		20	6/30/2018	67-64-1
Benzene	< 10	10	< 31.9	31.9		20	6/30/2018	71-43-2
Chlorobenzene	< 10	10	< 46.0	46.0		20	6/30/2018	108-90-7
Chloroform	< 10	10	< 48.8	48.8		20	6/30/2018	67-66-3
cis-1,2-Dichloroethene	**76**	**10**	**301**	**39.6**		20	6/30/2018	156-59-2
Dichlorodifluoromethane(F-12)	< 20	20	< 99.0	99.0		20	6/30/2018	75-71-8
Ethylbenzene	< 10	10	< 43.4	43.4		20	6/30/2018	100-41-4
m&p-Xylene	< 20	20	< 86.8	86.8		20	6/30/2018	179601-23-1
Methylene chloride	< 40	40	< 139	139		20	6/30/2018	75-09-2
o-Xylene	< 10	10	< 43.4	43.4		20	6/30/2018	95-47-6
Tetrachloroethene	**46**	**20**	**312**	**136**		20	6/30/2018	127-18-4
Tetrahydrofuran	< 40	40	< 118	118		20	6/30/2018	109-99-9
Toluene	< 10	10	< 37.7	37.7		20	6/30/2018	108-88-3
trans-1,2-Dichloroethene	< 10	10	< 39.6	39.6		20	6/30/2018	156-60-5
Trichloroethene	**399**	**10**	**2,140**	**53.7**		20	6/30/2018	79-01-6
Trichlorofluoromethane(F-11)	< 10	10	< 56.2	56.2		20	6/30/2018	75-69-4
Trichlorotrifluoroethane(F-113)	**111**	**10**	**849**	**76.6**		20	6/30/2018	76-13-1
Vinyl chloride	< 10	10	< 25.6	25.6		20	6/30/2018	75-01-4
Surr: 4-Bromofluorobenzene	83.3	70-130	%REC					

Airtech Environmental Laboratories (AEL) - AZ 0740

4620 E.Elwood St., Suite 13, Phoenix, AZ 85040 480-968-5888 Fax 480-966-1888

Client:	WOOD	**Client Sample ID:**	Dup02-061518
Project:	Cave Creek Landfill	**Project Number:**	14-2014-2034
Lab Order:	18F027	**Collection:**	6/15/2018
Lab ID:	10	**Matrix:**	Soil vapor

	ppbv		ug/M^3				Date	
Analyses	**Result**	**Limit**	**Result**	**Limit**	**Qual**	**DF**	**Analyzed**	**CAS#**
VOLATILE ORGANICS IN AIR		**TO-15**					Analyst: JJ	
1,1-Dichloroethane	< 10	10	< 40.5	40.5		20	6/30/2018	75-34-3
1,1-Dichloroethene	**44**	**10**	**176**	**39.7**		20	6/30/2018	75-35-4
1,2-Dichlorobenzene	< 10	10	< 60.1	60.1		20	6/30/2018	95-50-1
1,2-Dichloroethane	< 10	10	< 40.5	40.5		20	6/30/2018	107-06-2
2-Butanone (MEK)	< 100	100	< 295	295		20	6/30/2018	78-93-3
Acetone	< 100	100	< 238	238		20	6/30/2018	67-64-1
Benzene	< 10	10	< 31.9	31.9		20	6/30/2018	71-43-2
Chlorobenzene	< 10	10	< 46.0	46.0		20	6/30/2018	108-90-7
Chloroform	< 10	10	< 48.8	48.8		20	6/30/2018	67-66-3
cis-1,2-Dichloroethene	**80**	**10**	**315**	**39.6**		20	6/30/2018	156-59-2
Dichlorodifluoromethane(F-12)	< 20	20	< 99.0	99.0		20	6/30/2018	75-71-8
Ethylbenzene	< 10	10	< 43.4	43.4		20	6/30/2018	100-41-4
m&p-Xylene	< 20	20	< 86.8	86.8		20	6/30/2018	179601-23-1
Methylene chloride	< 40	40	< 139	139		20	6/30/2018	75-09-2
o-Xylene	< 10	10	< 43.4	43.4		20	6/30/2018	95-47-6
Tetrachloroethene	**50**	**20**	**336**	**136**		20	6/30/2018	127-18-4
Tetrahydrofuran	< 40	40	< 118	118		20	6/30/2018	109-99-9
Toluene	< 10	10	< 37.7	37.7		20	6/30/2018	108-88-3
trans-1,2-Dichloroethene	< 10	10	< 39.6	39.6		20	6/30/2018	156-60-5
Trichloroethene	**418**	**10**	**2,250**	**53.7**		20	6/30/2018	79-01-6
Trichlorofluoromethane(F-11)	< 10	10	< 56.2	56.2		20	6/30/2018	75-69-4
Trichlorotrifluoroethane(F-113)	**115**	**10**	**878**	**76.6**		20	6/30/2018	76-13-1
Vinyl chloride	< 10	10	< 25.6	25.6		20	6/30/2018	75-01-4
Surr: 4-Bromofluorobenzene	82.6	70-130	%REC					

Airtech Environmental Laboratories (AEL) - AZ 0740

4620 E.Elwood St., Suite 13, Phoenix, AZ 85040 480-968-5888 Fax 480-966-1888

Client:	WOOD	**Client Sample ID:**	TSSV-4D-SG-061818
Project:	Cave Creek Landfill	**Project Number:**	14-2014-2034
Lab Order:	18F027	**Collection:**	6/18/2018
Lab ID:	11	**Matrix:**	Soil vapor

	ppbv		ug/M^3				Date	
Analyses	**Result**	**Limit**	**Result**	**Limit**	**Qual**	**DF**	**Analyzed**	**CAS#**
VOLATILE ORGANICS IN AIR		**TO-15**					Analyst: JJ	
1,1-Dichloroethane	< 10	10	< 40.5	40.5		20	6/30/2018	75-34-3
1,1-Dichloroethene	< 10	10	< 39.7	39.7		20	6/30/2018	75-35-4
1,2-Dichlorobenzene	< 10	10	< 60.1	60.1		20	6/30/2018	95-50-1
1,2-Dichloroethane	< 10	10	< 40.5	40.5		20	6/30/2018	107-06-2
2-Butanone (MEK)	< 100	100	< 295	295		20	6/30/2018	78-93-3
Acetone	< 100	100	< 238	238		20	6/30/2018	67-64-1
Benzene	< 10	10	< 31.9	31.9		20	6/30/2018	71-43-2
Chlorobenzene	< 10	10	< 46.0	46.0		20	6/30/2018	108-90-7
Chloroform	< 10	10	< 48.8	48.8		20	6/30/2018	67-66-3
cis-1,2-Dichloroethene	**19**	**10**	**73.7**	**39.6**		20	6/30/2018	156-59-2
Dichlorodifluoromethane(F-12)	< 20	20	< 99.0	99.0		20	6/30/2018	75-71-8
Ethylbenzene	< 10	10	< 43.4	43.4		20	6/30/2018	100-41-4
m&p-Xylene	< 20	20	< 86.8	86.8		20	6/30/2018	179601-23-1
Methylene chloride	< 40	40	< 139	139		20	6/30/2018	75-09-2
o-Xylene	< 10	10	< 43.4	43.4		20	6/30/2018	95-47-6
Tetrachloroethene	**43**	**20**	**290**	**136**		20	6/30/2018	127-18-4
Tetrahydrofuran	< 40	40	< 118	118		20	6/30/2018	109-99-9
Toluene	< 10	10	< 37.7	37.7		20	6/30/2018	108-88-3
trans-1,2-Dichloroethene	< 10	10	< 39.6	39.6		20	6/30/2018	156-60-5
Trichloroethene	**455**	**10**	**2,440**	**53.7**		20	6/30/2018	79-01-6
Trichlorofluoromethane(F-11)	< 10	10	< 56.2	56.2		20	6/30/2018	75-69-4
Trichlorotrifluoroethane(F-113)	**16**	**10**	**121**	**76.6**		20	6/30/2018	76-13-1
Vinyl chloride	< 10	10	< 25.6	25.6		20	6/30/2018	75-01-4
Surr: 4-Bromofluorobenzene	76.7	70-130	%REC					

Airtech Environmental Laboratories (AEL) - AZ 0740

4620 E.Elwood St., Suite 13, Phoenix, AZ 85040 480-968-5888 Fax 480-966-1888

Client:	WOOD	**Client Sample ID:**	Dup03-061818
Project:	Cave Creek Landfill	**Project Number:**	14-2014-2034
Lab Order:	18F027	**Collection:**	6/18/2018
Lab ID:	12	**Matrix:**	Soil vapor

	ppbv		ug/M^3				Date	
Analyses	**Result**	**Limit**	**Result**	**Limit**	**Qual**	**DF**	**Analyzed**	**CAS#**
VOLATILE ORGANICS IN AIR		**TO-15**					Analyst: JJ	
1,1-Dichloroethane	< 10	10	< 40.5	40.5		20	6/30/2018	75-34-3
1,1-Dichloroethene	< 10	10	< 39.7	39.7		20	6/30/2018	75-35-4
1,2-Dichlorobenzene	< 10	10	< 60.1	60.1		20	6/30/2018	95-50-1
1,2-Dichloroethane	< 10	10	< 40.5	40.5		20	6/30/2018	107-06-2
2-Butanone (MEK)	< 100	100	< 295	295		20	6/30/2018	78-93-3
Acetone	< 100	100	< 238	238		20	6/30/2018	67-64-1
Benzene	< 10	10	< 31.9	31.9		20	6/30/2018	71-43-2
Chlorobenzene	< 10	10	< 46.0	46.0		20	6/30/2018	108-90-7
Chloroform	< 10	10	< 48.8	48.8		20	6/30/2018	67-66-3
cis-1,2-Dichloroethene	**19**	**10**	**74.4**	**39.6**		20	6/30/2018	156-59-2
Dichlorodifluoromethane(F-12)	< 20	20	< 99.0	99.0		20	6/30/2018	75-71-8
Ethylbenzene	< 10	10	< 43.4	43.4		20	6/30/2018	100-41-4
m&p-Xylene	< 20	20	< 86.8	86.8		20	6/30/2018	179601-23-1
Methylene chloride	< 40	40	< 139	139		20	6/30/2018	75-09-2
o-Xylene	< 10	10	< 43.4	43.4		20	6/30/2018	95-47-6
Tetrachloroethene	**42**	**20**	**287**	**136**		20	6/30/2018	127-18-4
Tetrahydrofuran	< 40	40	< 118	118		20	6/30/2018	109-99-9
Toluene	< 10	10	< 37.7	37.7		20	6/30/2018	108-88-3
trans-1,2-Dichloroethene	< 10	10	< 39.6	39.6		20	6/30/2018	156-60-5
Trichloroethene	**480**	**10**	**2,580**	**53.7**		20	6/30/2018	79-01-6
Trichlorofluoromethane(F-11)	< 10	10	< 56.2	56.2		20	6/30/2018	75-69-4
Trichlorotrifluoroethane(F-113)	**16**	**10**	**121**	**76.6**		20	6/30/2018	76-13-1
Vinyl chloride	< 10	10	< 25.6	25.6		20	6/30/2018	75-01-4
Surr: 4-Bromofluorobenzene	78.9	70-130	%REC					

Airtech Environmental Laboratories (AEL) - AZ 0740

4620 E.Elwood St., Suite 13, Phoenix, AZ 85040 480-968-5888 Fax 480-966-1888

Client:	WOOD	**Client Sample ID:**	SVE-1S-SG-061818
Project:	Cave Creek Landfill	**Project Number:**	14-2014-2034
Lab Order:	18F027	**Collection:**	6/18/2018
Lab ID:	13	**Matrix:**	Soil vapor

	ppbv		ug/M^3				Date	
Analyses	**Result**	**Limit**	**Result**	**Limit**	**Qual**	**DF**	**Analyzed**	**CAS#**
VOLATILE ORGANICS IN AIR		**TO-15**					Analyst: JJ	
1,1-Dichloroethane	< 50	50	< 203	203		100	6/30/2018	75-34-3
1,1-Dichloroethene	< 50	50	< 199	199		100	6/30/2018	75-35-4
1,2-Dichlorobenzene	< 50	50	< 301	301		100	6/30/2018	95-50-1
1,2-Dichloroethane	< 50	50	< 203	203		100	6/30/2018	107-06-2
2-Butanone (MEK)	< 500	500	< 1,480	1,480		100	6/30/2018	78-93-3
Acetone	< 500	500	< 1,190	1,190		100	6/30/2018	67-64-1
Benzene	< 50	50	< 160	160		100	6/30/2018	71-43-2
Chlorobenzene	**174**	**50**	**800**	**230**		100	6/30/2018	108-90-7
Chloroform	< 50	50	< 244	244		100	6/30/2018	67-66-3
cis-1,2-Dichloroethene	< 50	50	< 198	198		100	6/30/2018	156-59-2
Dichlorodifluoromethane(F-12)	< 100	100	< 495	495		100	6/30/2018	75-71-8
Ethylbenzene	< 50	50	< 217	217		100	6/30/2018	100-41-4
m&p-Xylene	< 100	100	< 434	434		100	6/30/2018	179601-23-1
Methylene chloride	< 200	200	< 694	694		100	6/30/2018	75-09-2
o-Xylene	< 50	50	< 217	217		100	6/30/2018	95-47-6
Tetrachloroethene	**206**	**100**	**1,400**	**678**		100	6/30/2018	127-18-4
Tetrahydrofuran	< 200	200	< 590	590		100	6/30/2018	109-99-9
Toluene	< 50	50	< 189	189		100	6/30/2018	108-88-3
trans-1,2-Dichloroethene	< 50	50	< 198	198		100	6/30/2018	156-60-5
Trichloroethene	**1,500**	**50**	**8,060**	**269**		100	6/30/2018	79-01-6
Trichlorofluoromethane(F-11)	< 50	50	< 281	281		100	6/30/2018	75-69-4
Trichlorotrifluoroethane(F-113)	< 50	50	< 383	383		100	6/30/2018	76-13-1
Vinyl chloride	< 50	50	< 128	128		100	6/30/2018	75-01-4
Surr: 4-Bromofluorobenzene	77.8	70-130	%REC					

Airtech Environmental Laboratories (AEL) - AZ 0740

4620 E.Elwood St., Suite 13, Phoenix, AZ 85040 480-968-5888 Fax 480-966-1888

Client:	WOOD	**Client Sample ID:**	SVE-1M-SG-061818
Project:	Cave Creek Landfill	**Project Number:**	14-2014-2034
Lab Order:	18F027	**Collection:**	6/18/2018
Lab ID:	14	**Matrix:**	Soil vapor

	ppbv		ug/M^3				Date	
Analyses	**Result**	**Limit**	**Result**	**Limit**	**Qual**	**DF**	**Analyzed**	**CAS#**
VOLATILE ORGANICS IN AIR	**TO-15**						Analyst: JJ	
1,1-Dichloroethane	< 50	50	< 203	203		100	6/30/2018	75-34-3
1,1-Dichloroethene	< 50	50	< 199	199		100	6/30/2018	75-35-4
1,2-Dichlorobenzene	< 50	50	< 301	301		100	6/30/2018	95-50-1
1,2-Dichloroethane	< 50	50	< 203	203		100	6/30/2018	107-06-2
2-Butanone (MEK)	< 500	500	< 1,480	1,480		100	6/30/2018	78-93-3
Acetone	< 500	500	< 1,190	1,190		100	6/30/2018	67-64-1
Benzene	< 50	50	< 160	160		100	6/30/2018	71-43-2
Chlorobenzene	**151**	**50**	**695**	**230**		100	6/30/2018	108-90-7
Chloroform	< 50	50	< 244	244		100	6/30/2018	67-66-3
cis-1,2-Dichloroethene	< 50	50	< 198	198		100	6/30/2018	156-59-2
Dichlorodifluoromethane(F-12)	< 100	100	< 495	495		100	6/30/2018	75-71-8
Ethylbenzene	< 50	50	< 217	217		100	6/30/2018	100-41-4
m&p-Xylene	< 100	100	< 434	434		100	6/30/2018	179601-23-1
Methylene chloride	< 200	200	< 694	694		100	6/30/2018	75-09-2
o-Xylene	< 50	50	< 217	217		100	6/30/2018	95-47-6
Tetrachloroethene	**136**	**100**	**922**	**678**		100	6/30/2018	127-18-4
Tetrahydrofuran	< 200	200	< 590	590		100	6/30/2018	109-99-9
Toluene	< 50	50	< 189	189		100	6/30/2018	108-88-3
trans-1,2-Dichloroethene	< 50	50	< 198	198		100	6/30/2018	156-60-5
Trichloroethene	**1,210**	**50**	**6,500**	**269**		100	6/30/2018	79-01-6
Trichlorofluoromethane(F-11)	< 50	50	< 281	281		100	6/30/2018	75-69-4
Trichlorotrifluoroethane(F-113)	< 50	50	< 383	383		100	6/30/2018	76-13-1
Vinyl chloride	< 50	50	< 128	128		100	6/30/2018	75-01-4
Surr: 4-Bromofluorobenzene	72.4	70-130	%REC					

Airtech Environmental Laboratories (AEL) - AZ 0740

4620 E.Elwood St., Suite 13, Phoenix, AZ 85040 480-968-5888 Fax 480-966-1888

Client:	WOOD	**Client Sample ID:**	SVE-1D-SG-061818
Project:	Cave Creek Landfill	**Project Number:**	14-2014-2034
Lab Order:	18F027	**Collection:**	6/18/2018
Lab ID:	15	**Matrix:**	Soil vapor

	ppbv		ug/M^3				Date	
Analyses	**Result**	**Limit**	**Result**	**Limit**	**Qual**	**DF**	**Analyzed**	**CAS#**
VOLATILE ORGANICS IN AIR	**TO-15**						Analyst: JJ	
1,1-Dichloroethane	< 50	50	< 203	203		100	7/5/2018	75-34-3
1,1-Dichloroethene	**52**	**50**	**206**	**199**		100	7/5/2018	75-35-4
1,2-Dichlorobenzene	< 50	50	< 301	301		100	7/5/2018	95-50-1
1,2-Dichloroethane	< 50	50	< 203	203		100	7/5/2018	107-06-2
2-Butanone (MEK)	< 500	500	< 1,480	1,480		100	7/5/2018	78-93-3
Acetone	< 500	500	< 1,190	1,190		100	7/5/2018	67-64-1
Benzene	< 50	50	< 160	160		100	7/5/2018	71-43-2
Chlorobenzene	**192**	**50**	**883**	**230**		100	7/5/2018	108-90-7
Chloroform	< 50	50	< 244	244		100	7/5/2018	67-66-3
cis-1,2-Dichloroethene	**76**	**50**	**301**	**198**		100	7/5/2018	156-59-2
Dichlorodifluoromethane(F-12)	< 100	100	< 495	495		100	7/5/2018	75-71-8
Ethylbenzene	< 50	50	< 217	217		100	7/5/2018	100-41-4
m&p-Xylene	< 100	100	< 434	434		100	7/5/2018	179601-23-1
Methylene chloride	< 200	200	< 694	694		100	7/5/2018	75-09-2
o-Xylene	< 50	50	< 217	217		100	7/5/2018	95-47-6
Tetrachloroethene	**132**	**100**	**895**	**678**		100	7/5/2018	127-18-4
Tetrahydrofuran	< 200	200	< 590	590		100	7/5/2018	109-99-9
Toluene	< 50	50	< 189	189		100	7/5/2018	108-88-3
trans-1,2-Dichloroethene	< 50	50	< 198	198		100	7/5/2018	156-60-5
Trichloroethene	**1,840**	**50**	**9,880**	**269**		100	7/5/2018	79-01-6
Trichlorofluoromethane(F-11)	< 50	50	< 281	281		100	7/5/2018	75-69-4
Trichlorotrifluoroethane(F-113)	**99**	**50**	**758**	**383**		100	7/5/2018	76-13-1
Vinyl chloride	< 50	50	< 128	128		100	7/5/2018	75-01-4
Surr: 4-Bromofluorobenzene	80.3	70-130	%REC					

Airtech Environmental Laboratories (AEL) - AZ 0740

4620 E.Elwood St., Suite 13, Phoenix, AZ 85040 480-968-5888 Fax 480-966-1888

Client:	WOOD	**Client Sample ID:**	SVE-2S-SG-062018
Project:	Cave Creek Landfill	**Project Number:**	14-2014-2034
Lab Order:	18F027	**Collection:**	6/20/2018
Lab ID:	16	**Matrix:**	Soil vapor

	ppbv		ug/M^3				Date	
Analyses	**Result**	**Limit**	**Result**	**Limit**	**Qual**	**DF**	**Analyzed**	**CAS#**
VOLATILE ORGANICS IN AIR		**TO-15**					Analyst: JJ	
1,1-Dichloroethane	< 10	10	< 40.5	40.5		20	7/5/2018	75-34-3
1,1-Dichloroethene	< 10	10	< 39.7	39.7		20	7/5/2018	75-35-4
1,2-Dichlorobenzene	< 10	10	< 60.1	60.1		20	7/5/2018	95-50-1
1,2-Dichloroethane	< 10	10	< 40.5	40.5		20	7/5/2018	107-06-2
2-Butanone (MEK)	< 100	100	< 295	295		20	7/5/2018	78-93-3
Acetone	< 100	100	< 238	238		20	7/5/2018	67-64-1
Benzene	**19**	**10**	**61.2**	**31.9**		20	7/5/2018	71-43-2
Chlorobenzene	< 10	10	< 46.0	46.0		20	7/5/2018	108-90-7
Chloroform	< 10	10	< 48.8	48.8		20	7/5/2018	67-66-3
cis-1,2-Dichloroethene	**360**	**10**	**1,430**	**39.6**		20	7/5/2018	156-59-2
Dichlorodifluoromethane(F-12)	**47**	**20**	**234**	**99.0**		20	7/5/2018	75-71-8
Ethylbenzene	< 10	10	< 43.4	43.4		20	7/5/2018	100-41-4
m&p-Xylene	< 20	20	< 86.8	86.8		20	7/5/2018	179601-23-1
Methylene chloride	< 40	40	< 139	139		20	7/5/2018	75-09-2
o-Xylene	< 10	10	< 43.4	43.4		20	7/5/2018	95-47-6
Tetrachloroethene	**52**	**20**	**353**	**136**		20	7/5/2018	127-18-4
Tetrahydrofuran	< 40	40	< 118	118		20	7/5/2018	109-99-9
Toluene	**16**	**10**	**60.3**	**37.7**		20	7/5/2018	108-88-3
trans-1,2-Dichloroethene	< 10	10	< 39.6	39.6		20	7/5/2018	156-60-5
Trichloroethene	**154**	**10**	**829**	**53.7**		20	7/5/2018	79-01-6
Trichlorofluoromethane(F-11)	**21**	**10**	**120**	**56.2**		20	7/5/2018	75-69-4
Trichlorotrifluoroethane(F-113)	< 10	10	< 76.6	76.6		20	7/5/2018	76-13-1
Vinyl chloride	**128**	**10**	**327**	**25.6**		20	7/5/2018	75-01-4
Surr: 4-Bromofluorobenzene	87.7	70-130	%REC					

Airtech Environmental Laboratories (AEL) - AZ 0740

4620 E.Elwood St., Suite 13, Phoenix, AZ 85040 480-968-5888 Fax 480-966-1888

Client:	WOOD	**Client Sample ID:**	SVE-2M-SG-062018
Project:	Cave Creek Landfill	**Project Number:**	14-2014-2034
Lab Order:	18F027	**Collection:**	6/20/2018
Lab ID:	17	**Matrix:**	Soil vapor

	ppbv		ug/M^3				Date	
Analyses	**Result**	**Limit**	**Result**	**Limit**	**Qual**	**DF**	**Analyzed**	**CAS#**
VOLATILE ORGANICS IN AIR	**TO-15**						Analyst: JJ	
1,1-Dichloroethane	< 10	10	< 40.5	40.5		20	7/5/2018	75-34-3
1,1-Dichloroethene	< 10	10	< 39.7	39.7		20	7/5/2018	75-35-4
1,2-Dichlorobenzene	< 10	10	< 60.1	60.1		20	7/5/2018	95-50-1
1,2-Dichloroethane	< 10	10	< 40.5	40.5		20	7/5/2018	107-06-2
2-Butanone (MEK)	< 100	100	< 295	295		20	7/5/2018	78-93-3
Acetone	< 100	100	< 238	238		20	7/5/2018	67-64-1
Benzene	< 10	10	< 31.9	31.9		20	7/5/2018	71-43-2
Chlorobenzene	< 10	10	< 46.0	46.0		20	7/5/2018	108-90-7
Chloroform	**27**	**10**	**134**	**48.8**		20	7/5/2018	67-66-3
cis-1,2-Dichloroethene	**23**	**10**	**91.9**	**39.6**		20	7/5/2018	156-59-2
Dichlorodifluoromethane(F-12)	**61**	**20**	**304**	**99.0**		20	7/5/2018	75-71-8
Ethylbenzene	< 10	10	< 43.4	43.4		20	7/5/2018	100-41-4
m&p-Xylene	< 20	20	< 86.8	86.8		20	7/5/2018	179601-23-1
Methylene chloride	< 40	40	< 139	139		20	7/5/2018	75-09-2
o-Xylene	< 10	10	< 43.4	43.4		20	7/5/2018	95-47-6
Tetrachloroethene	**185**	**20**	**1,250**	**136**		20	7/5/2018	127-18-4
Tetrahydrofuran	< 40	40	< 118	118		20	7/5/2018	109-99-9
Toluene	< 10	10	< 37.7	37.7		20	7/5/2018	108-88-3
trans-1,2-Dichloroethene	< 10	10	< 39.6	39.6		20	7/5/2018	156-60-5
Trichloroethene	**260**	**10**	**1,400**	**53.7**		20	7/5/2018	79-01-6
Trichlorofluoromethane(F-11)	**32**	**10**	**182**	**56.2**		20	7/5/2018	75-69-4
Trichlorotrifluoroethane(F-113)	**61**	**10**	**464**	**76.6**		20	7/5/2018	76-13-1
Vinyl chloride	**11**	**10**	**27.6**	**25.6**		20	7/5/2018	75-01-4
Surr: 4-Bromofluorobenzene	86.7	70-130	%REC					

Airtech Environmental Laboratories (AEL) - AZ 0740

4620 E.Elwood St., Suite 13, Phoenix, AZ 85040 480-968-5888 Fax 480-966-1888

Client:	WOOD	**Client Sample ID:**	SVE-3S-SG-062018
Project:	Cave Creek Landfill	**Project Number:**	14-2014-2034
Lab Order:	18F027	**Collection:**	6/20/2018
Lab ID:	18	**Matrix:**	Soil vapor

	ppbv		ug/M^3				Date	
Analyses	**Result**	**Limit**	**Result**	**Limit**	**Qual**	**DF**	**Analyzed**	**CAS#**
VOLATILE ORGANICS IN AIR	**TO-15**						Analyst: JJ	
1,1-Dichloroethane	< 5.0	5.0	< 20.3	20.3		10	7/5/2018	75-34-3
1,1-Dichloroethene	< 5.0	5.0	< 19.9	19.9		10	7/5/2018	75-35-4
1,2-Dichlorobenzene	< 5.0	5.0	< 30.1	30.1		10	7/5/2018	95-50-1
1,2-Dichloroethane	< 5.0	5.0	< 20.3	20.3		10	7/5/2018	107-06-2
2-Butanone (MEK)	< 50	50	< 148	148		10	7/5/2018	78-93-3
Acetone	< 50	50	< 119	119		10	7/5/2018	67-64-1
Benzene	< 5.0	5.0	< 16.0	16.0		10	7/5/2018	71-43-2
Chlorobenzene	< 5.0	5.0	< 23.0	23.0		10	7/5/2018	108-90-7
Chloroform	< 5.0	5.0	< 24.4	24.4		10	7/5/2018	67-66-3
cis-1,2-Dichloroethene	**7.3**	**5.0**	**28.9**	**19.8**		10	7/5/2018	156-59-2
Dichlorodifluoromethane(F-12)	**23**	**10**	**113**	**49.5**		10	7/5/2018	75-71-8
Ethylbenzene	< 5.0	5.0	< 21.7	21.7		10	7/5/2018	100-41-4
m&p-Xylene	< 10	10	< 43.4	43.4		10	7/5/2018	179601-23-1
Methylene chloride	< 20	20	< 69.4	69.4		10	7/5/2018	75-09-2
o-Xylene	< 5.0	5.0	< 21.7	21.7		10	7/5/2018	95-47-6
Tetrachloroethene	**89**	**10**	**600**	**67.8**		10	7/5/2018	127-18-4
Tetrahydrofuran	< 20	20	< 59.0	59.0		10	7/5/2018	109-99-9
Toluene	< 5.0	5.0	< 18.9	18.9		10	7/5/2018	108-88-3
trans-1,2-Dichloroethene	< 5.0	5.0	< 19.8	19.8		10	7/5/2018	156-60-5
Trichloroethene	**62**	**5.0**	**331**	**26.9**		10	7/5/2018	79-01-6
Trichlorofluoromethane(F-11)	**14**	**5.0**	**77.6**	**28.1**		10	7/5/2018	75-69-4
Trichlorotrifluoroethane(F-113)	**13**	**5.0**	**95.8**	**38.3**		10	7/5/2018	76-13-1
Vinyl chloride	< 5.0	5.0	< 12.8	12.8		10	7/5/2018	75-01-4
Surr: 4-Bromofluorobenzene	86.0	70-130	%REC					

Airtech Environmental Laboratories (AEL) - AZ 0740

4620 E.Elwood St., Suite 13, Phoenix, AZ 85040 480-968-5888 Fax 480-966-1888

Client:	WOOD	**Client Sample ID:**	SVE-3M-SG-062018
Project:	Cave Creek Landfill	**Project Number:**	14-2014-2034
Lab Order:	18F027	**Collection:**	6/20/2018
Lab ID:	19	**Matrix:**	Soil vapor

	ppbv		ug/M^3				Date	
Analyses	**Result**	**Limit**	**Result**	**Limit**	**Qual**	**DF**	**Analyzed**	**CAS#**
VOLATILE ORGANICS IN AIR		**TO-15**					Analyst: JJ	
1,1-Dichloroethane	< 10	10	< 40.5	40.5		20	6/30/2018	75-34-3
1,1-Dichloroethene	**10**	**10**	**39.7**	**39.7**		20	6/30/2018	75-35-4
1,2-Dichlorobenzene	< 10	10	< 60.1	60.1		20	6/30/2018	95-50-1
1,2-Dichloroethane	< 10	10	< 40.5	40.5		20	6/30/2018	107-06-2
2-Butanone (MEK)	< 100	100	< 295	295		20	6/30/2018	78-93-3
Acetone	< 100	100	< 238	238		20	6/30/2018	67-64-1
Benzene	< 10	10	< 31.9	31.9		20	6/30/2018	71-43-2
Chlorobenzene	< 10	10	< 46.0	46.0		20	6/30/2018	108-90-7
Chloroform	< 10	10	< 48.8	48.8		20	6/30/2018	67-66-3
cis-1,2-Dichloroethene	< 10	10	< 39.6	39.6		20	6/30/2018	156-59-2
Dichlorodifluoromethane(F-12)	**140**	**20**	**695**	**99.0**		20	6/30/2018	75-71-8
Ethylbenzene	< 10	10	< 43.4	43.4		20	6/30/2018	100-41-4
m&p-Xylene	< 20	20	< 86.8	86.8		20	6/30/2018	179601-23-1
Methylene chloride	**130**	**40**	**451**	**139**		20	6/30/2018	75-09-2
o-Xylene	< 10	10	< 43.4	43.4		20	6/30/2018	95-47-6
Tetrachloroethene	**204**	**20**	**1,380**	**136**		20	6/30/2018	127-18-4
Tetrahydrofuran	< 40	40	< 118	118		20	6/30/2018	109-99-9
Toluene	< 10	10	< 37.7	37.7		20	6/30/2018	108-88-3
trans-1,2-Dichloroethene	< 10	10	< 39.6	39.6		20	6/30/2018	156-60-5
Trichloroethene	**322**	**10**	**1,730**	**53.7**		20	6/30/2018	79-01-6
Trichlorofluoromethane(F-11)	**129**	**10**	**723**	**56.2**		20	6/30/2018	75-69-4
Trichlorotrifluoroethane(F-113)	**60**	**10**	**458**	**76.6**		20	6/30/2018	76-13-1
Vinyl chloride	< 10	10	< 25.6	25.6		20	6/30/2018	75-01-4
Surr: 4-Bromofluorobenzene	82.5	70-130	%REC					

Airtech Environmental Laboratories (AEL) - AZ 0740

4620 E.Elwood St., Suite 13, Phoenix, AZ 85040 480-968-5888 Fax 480-966-1888

Client:	WOOD	**Client Sample ID:**	SVE-3-SG-062018
Project:	Cave Creek Landfill	**Project Number:**	14-2014-2034
Lab Order:	18F027	**Collection:**	6/20/2018
Lab ID:	20	**Matrix:**	Soil vapor

	ppbv		ug/M^3				Date	
Analyses	**Result**	**Limit**	**Result**	**Limit**	**Qual**	**DF**	**Analyzed**	**CAS#**
VOLATILE ORGANICS IN AIR	**TO-15**						Analyst: JJ	
1,1-Dichloroethane	< 500	500	< 2,030	2,030		1,000	6/30/2018	75-34-3
1,1-Dichloroethene	**720**	**500**	**2,860**	**1,990**		1,000	6/30/2018	75-35-4
1,2-Dichlorobenzene	< 500	500	< 3,000	3,000		1,000	6/30/2018	95-50-1
1,2-Dichloroethane	< 500	500	< 2,030	2,030		1,000	6/30/2018	107-06-2
2-Butanone (MEK)	< 5,000	5,000	< 14,800	14,800		1,000	6/30/2018	78-93-3
Acetone	< 5,000	5,000	< 11,900	11,900		1,000	6/30/2018	67-64-1
Benzene	< 500	500	< 1,600	1,600		1,000	6/30/2018	71-43-2
Chlorobenzene	< 500	500	< 2,300	2,300		1,000	6/30/2018	108-90-7
Chloroform	< 500	500	< 2,440	2,440		1,000	6/30/2018	67-66-3
cis-1,2-Dichloroethene	**800**	**500**	**3,170**	**1,980**		1,000	6/30/2018	156-59-2
Dichlorodifluoromethane(F-12)	< 1,000	1,000	< 4,950	4,950		1,000	6/30/2018	75-71-8
Ethylbenzene	< 500	500	< 2,170	2,170		1,000	6/30/2018	100-41-4
m&p-Xylene	< 1,000	1,000	< 4,340	4,340		1,000	6/30/2018	179601-23-1
Methylene chloride	< 2,000	2,000	< 6,940	6,940		1,000	6/30/2018	75-09-2
o-Xylene	< 500	500	< 2,170	2,170		1,000	6/30/2018	95-47-6
Tetrachloroethene	< 1,000	1,000	< 6,780	6,780		1,000	6/30/2018	127-18-4
Tetrahydrofuran	< 2,000	2,000	< 5,900	5,900		1,000	6/30/2018	109-99-9
Toluene	< 500	500	< 1,890	1,890		1,000	6/30/2018	108-88-3
trans-1,2-Dichloroethene	< 500	500	< 1,980	1,980		1,000	6/30/2018	156-60-5
Trichloroethene	**17,600**	**500**	**94,500**	**2,690**		1,000	6/30/2018	79-01-6
Trichlorofluoromethane(F-11)	< 500	500	< 2,810	2,810		1,000	6/30/2018	75-69-4
Trichlorotrifluoroethane(F-113)	**1,840**	**500**	**14,094**	**3,830**		1,000	6/30/2018	76-13-1
Vinyl chloride	< 500	500	< 1,280	1,280		1,000	6/30/2018	75-01-4
Surr: 4-Bromofluorobenzene	73.2	70-130	%REC					

Airtech Environmental Laboratories (AEL) - AZ 0740

4620 E.Elwood St., Suite 13, Phoenix, AZ 85040 480-968-5888 Fax 480-966-1888

Client:	WOOD	**Client Sample ID:**	SVE-4S-SG-062018
Project:	Cave Creek Landfill	**Project Number:**	14-2014-2034
Lab Order:	18F027	**Collection:**	6/20/2018
Lab ID:	21	**Matrix:**	Soil vapor

	ppbv		ug/M^3				Date	
Analyses	**Result**	**Limit**	**Result**	**Limit**	**Qual**	**DF**	**Analyzed**	**CAS#**
VOLATILE ORGANICS IN AIR		**TO-15**					Analyst: JJ	
1,1-Dichloroethane	< 10	10	< 40.5	40.5		20	7/5/2018	75-34-3
1,1-Dichloroethene	< 10	10	< 39.7	39.7		20	7/5/2018	75-35-4
1,2-Dichlorobenzene	< 10	10	< 60.1	60.1		20	7/5/2018	95-50-1
1,2-Dichloroethane	< 10	10	< 40.5	40.5		20	7/5/2018	107-06-2
2-Butanone (MEK)	< 100	100	< 295	295		20	7/5/2018	78-93-3
Acetone	< 100	100	< 238	238		20	7/5/2018	67-64-1
Benzene	< 10	10	< 31.9	31.9		20	7/5/2018	71-43-2
Chlorobenzene	**168**	**10**	**774**	**46.0**		20	7/5/2018	108-90-7
Chloroform	< 10	10	< 48.8	48.8		20	7/5/2018	67-66-3
cis-1,2-Dichloroethene	**76**	**10**	**300**	**39.6**		20	7/5/2018	156-59-2
Dichlorodifluoromethane(F-12)	**50**	**20**	**247**	**99.0**		20	7/5/2018	75-71-8
Ethylbenzene	< 10	10	< 43.4	43.4		20	7/5/2018	100-41-4
m&p-Xylene	< 20	20	< 86.8	86.8		20	7/5/2018	179601-23-1
Methylene chloride	< 40	40	< 139	139		20	7/5/2018	75-09-2
o-Xylene	< 10	10	< 43.4	43.4		20	7/5/2018	95-47-6
Tetrachloroethene	**45**	**20**	**302**	**136**		20	7/5/2018	127-18-4
Tetrahydrofuran	< 40	40	< 118	118		20	7/5/2018	109-99-9
Toluene	< 10	10	< 37.7	37.7		20	7/5/2018	108-88-3
trans-1,2-Dichloroethene	< 10	10	< 39.6	39.6		20	7/5/2018	156-60-5
Trichloroethene	**178**	**10**	**956**	**53.7**		20	7/5/2018	79-01-6
Trichlorofluoromethane(F-11)	**78**	**10**	**439**	**56.2**		20	7/5/2018	75-69-4
Trichlorotrifluoroethane(F-113)	**15**	**10**	**116**	**76.6**		20	7/5/2018	76-13-1
Vinyl chloride	< 10	10	< 25.6	25.6		20	7/5/2018	75-01-4
Surr: 4-Bromofluorobenzene	88.0	70-130	%REC					

Airtech Environmental Laboratories (AEL) - AZ 0740

4620 E.Elwood St., Suite 13, Phoenix, AZ 85040 480-968-5888 Fax 480-966-1888

Client:	WOOD	**Client Sample ID:**	SVE-4M-SG-062018
Project:	Cave Creek Landfill	**Project Number:**	14-2014-2034
Lab Order:	18F027	**Collection:**	6/20/2018
Lab ID:	22	**Matrix:**	Soil vapor

	ppbv		ug/M^3				Date	
Analyses	**Result**	**Limit**	**Result**	**Limit**	**Qual**	**DF**	**Analyzed**	**CAS#**
VOLATILE ORGANICS IN AIR	**TO-15**						Analyst: JJ	
1,1-Dichloroethane	< 10	10	< 40.5	40.5		20	7/5/2018	75-34-3
1,1-Dichloroethene	**137**	**10**	**545**	**39.7**		20	7/5/2018	75-35-4
1,2-Dichlorobenzene	**82**	**10**	**490**	**60.1**		20	7/5/2018	95-50-1
1,2-Dichloroethane	< 10	10	< 40.5	40.5		20	7/5/2018	107-06-2
2-Butanone (MEK)	< 100	100	< 295	295		20	7/5/2018	78-93-3
Acetone	**791**	**100**	**1,880**	**238**		20	7/5/2018	67-64-1
Benzene	< 10	10	< 31.9	31.9		20	7/5/2018	71-43-2
Chlorobenzene	**469**	**10**	**2,160**	**46.0**		20	7/5/2018	108-90-7
Chloroform	< 10	10	< 48.8	48.8		20	7/5/2018	67-66-3
cis-1,2-Dichloroethene	**93**	**10**	**367**	**39.6**		20	7/5/2018	156-59-2
Dichlorodifluoromethane(F-12)	**25**	**20**	**122**	**99.0**		20	7/5/2018	75-71-8
Ethylbenzene	< 10	10	< 43.4	43.4		20	7/5/2018	100-41-4
m&p-Xylene	< 20	20	< 86.8	86.8		20	7/5/2018	179601-23-1
Methylene chloride	**49**	**40**	**169**	**139**		20	7/5/2018	75-09-2
o-Xylene	< 10	10	< 43.4	43.4		20	7/5/2018	95-47-6
Tetrachloroethene	**52**	**20**	**354**	**136**		20	7/5/2018	127-18-4
Tetrahydrofuran	< 40	40	< 118	118		20	7/5/2018	109-99-9
Toluene	< 10	10	< 37.7	37.7		20	7/5/2018	108-88-3
trans-1,2-Dichloroethene	< 10	10	< 39.6	39.6		20	7/5/2018	156-60-5
Trichloroethene	**236**	**10**	**1,270**	**53.7**		20	7/5/2018	79-01-6
Trichlorofluoromethane(F-11)	**41**	**10**	**229**	**56.2**		20	7/5/2018	75-69-4
Trichlorotrifluoroethane(F-113)	< 10	10	< 76.6	76.6		20	7/5/2018	76-13-1
Vinyl chloride	**35**	**10**	**89.6**	**25.6**		20	7/5/2018	75-01-4
Surr: 4-Bromofluorobenzene	89.5	70-130	%REC					

Airtech Environmental Laboratories (AEL) - AZ 0740

4620 E.Elwood St., Suite 13, Phoenix, AZ 85040 480-968-5888 Fax 480-966-1888

Client:	WOOD	**Client Sample ID:**	SVE-4-SG-062018
Project:	Cave Creek Landfill	**Project Number:**	14-2014-2034
Lab Order:	18F027	**Collection:**	6/20/2018
Lab ID:	23	**Matrix:**	Soil vapor

	ppbv		ug/M^3				Date	
Analyses	**Result**	**Limit**	**Result**	**Limit**	**Qual**	**DF**	**Analyzed**	**CAS#**
VOLATILE ORGANICS IN AIR	**TO-15**						Analyst: JJ	
1,1-Dichloroethane	< 2,500	2,500	< 10,100	10,100		5,000	7/5/2018	75-34-3
1,1-Dichloroethene	**63,800**	**2,500**	**253,000**	**9,930**		5,000	7/5/2018	75-35-4
1,2-Dichlorobenzene	< 2,500	2,500	< 15,000	15,000		5,000	7/5/2018	95-50-1
1,2-Dichloroethane	< 2,500	2,500	< 10,100	10,100		5,000	7/5/2018	107-06-2
2-Butanone (MEK)	< 25,000	25,000	< 73,800	73,800		5,000	7/5/2018	78-93-3
Acetone	< 25,000	25,000	< 59,500	59,500		5,000	7/5/2018	67-64-1
Benzene	< 2,500	2,500	< 7,980	7,980		5,000	7/5/2018	71-43-2
Chlorobenzene	< 2,500	2,500	< 11,500	11,500		5,000	7/5/2018	108-90-7
Chloroform	< 2,500	2,500	< 12,200	12,200		5,000	7/5/2018	67-66-3
cis-1,2-Dichloroethene	**12,600**	**2,500**	**49,900**	**9,900**		5,000	7/5/2018	156-59-2
Dichlorodifluoromethane(F-12)	< 5,000	5,000	< 24,800	24,800		5,000	7/5/2018	75-71-8
Ethylbenzene	< 2,500	2,500	< 10,900	10,900		5,000	7/5/2018	100-41-4
m&p-Xylene	< 5,000	5,000	< 21,700	21,700		5,000	7/5/2018	179601-23-1
Methylene chloride	**66,000**	**10,000**	**229,000**	**34,700**		5,000	7/5/2018	75-09-2
o-Xylene	< 2,500	2,500	< 10,900	10,900		5,000	7/5/2018	95-47-6
Tetrachloroethene	**14,400**	**5,000**	**97,600**	**33,900**		5,000	7/5/2018	127-18-4
Tetrahydrofuran	< 10,000	10,000	< 29,500	29,500		5,000	7/5/2018	109-99-9
Toluene	< 2,500	2,500	< 9,430	9,430		5,000	7/5/2018	108-88-3
trans-1,2-Dichloroethene	< 2,500	2,500	< 9,900	9,900		5,000	7/5/2018	156-60-5
Trichloroethene	**87,700**	**2,500**	**471,000**	**13,400**		5,000	7/5/2018	79-01-6
Trichlorofluoromethane(F-11)	< 2,500	2,500	< 14,100	14,100		5,000	7/5/2018	75-69-4
Trichlorotrifluoroethane(F-113)	**25,600**	**2,500**	**196,000**	**19,200**		5,000	7/5/2018	76-13-1
Vinyl chloride	< 2,500	2,500	< 6,400	6,400		5,000	7/5/2018	75-01-4
Surr: 4-Bromofluorobenzene	79.5	70-130	%REC					

Airtech Environmental Laboratories (AEL) - AZ 0740

4620 E.Elwood St., Suite 13, Phoenix, AZ 85040 480-968-5888 Fax 480-966-1888

Client:	WOOD	**Client Sample ID:**	Dup04-062018
Project:	Cave Creek Landfill	**Project Number:**	14-2014-2034
Lab Order:	18F027	**Collection:**	6/20/2018
Lab ID:	24	**Matrix:**	Soil vapor

	ppbv		ug/M^3				Date	
Analyses	**Result**	**Limit**	**Result**	**Limit**	**Qual**	**DF**	**Analyzed**	**CAS#**
VOLATILE ORGANICS IN AIR	**TO-15**						Analyst: JJ	
1,1-Dichloroethane	< 2,500	2,500	< 10,100	10,100		5,000	7/5/2018	75-34-3
1,1-Dichloroethene	**47,000**	**2,500**	**187,000**	**9,930**		5,000	7/5/2018	75-35-4
1,2-Dichlorobenzene	< 2,500	2,500	< 15,000	15,000		5,000	7/5/2018	95-50-1
1,2-Dichloroethane	< 2,500	2,500	< 10,100	10,100		5,000	7/5/2018	107-06-2
2-Butanone (MEK)	< 25,000	25,000	< 73,800	73,800		5,000	7/5/2018	78-93-3
Acetone	< 25,000	25,000	< 59,500	59,500		5,000	7/5/2018	67-64-1
Benzene	< 2,500	2,500	< 7,980	7,980		5,000	7/5/2018	71-43-2
Chlorobenzene	< 2,500	2,500	< 11,500	11,500		5,000	7/5/2018	108-90-7
Chloroform	< 2,500	2,500	< 12,200	12,200		5,000	7/5/2018	67-66-3
cis-1,2-Dichloroethene	**9,500**	**2,500**	**37,600**	**9,900**		5,000	7/5/2018	156-59-2
Dichlorodifluoromethane(F-12)	< 5,000	5,000	< 24,800	24,800		5,000	7/5/2018	75-71-8
Ethylbenzene	< 2,500	2,500	< 10,900	10,900		5,000	7/5/2018	100-41-4
m&p-Xylene	< 5,000	5,000	< 21,700	21,700		5,000	7/5/2018	179601-23-1
Methylene chloride	**48,100**	**10,000**	**167,000**	**34,700**		5,000	7/5/2018	75-09-2
o-Xylene	< 2,500	2,500	< 10,900	10,900		5,000	7/5/2018	95-47-6
Tetrachloroethene	**12,200**	**5,000**	**82,700**	**33,900**		5,000	7/5/2018	127-18-4
Tetrahydrofuran	< 10,000	10,000	< 29,500	29,500		5,000	7/5/2018	109-99-9
Toluene	< 2,500	2,500	< 9,430	9,430		5,000	7/5/2018	108-88-3
trans-1,2-Dichloroethene	< 2,500	2,500	< 9,900	9,900		5,000	7/5/2018	156-60-5
Trichloroethene	**69,400**	**2,500**	**373,000**	**13,400**		5,000	7/5/2018	79-01-6
Trichlorofluoromethane(F-11)	< 2,500	2,500	< 14,100	14,100		5,000	7/5/2018	75-69-4
Trichlorotrifluoroethane(F-113)	**19,700**	**2,500**	**151,000**	**19,200**		5,000	7/5/2018	76-13-1
Vinyl chloride	< 2,500	2,500	< 6,400	6,400		5,000	7/5/2018	75-01-4
Surr: 4-Bromofluorobenzene	79.3	70-130	%REC					

Airtech Environmental Laboratories (AEL) - AZ 0740

4620 E.Elwood St., Suite 13, Phoenix, AZ 85040 480-968-5888 Fax 480-966-1888

Client:	WOOD	**Client Sample ID:**	SVE-2-SG-062018
Project:	Cave Creek Landfill	**Project Number:**	14-2014-2034
Lab Order:	18F027	**Collection:**	6/20/2018
Lab ID:	25	**Matrix:**	Soil vapor

	ppbv		ug/M^3				Date	
Analyses	**Result**	**Limit**	**Result**	**Limit**	**Qual**	**DF**	**Analyzed**	**CAS#**
VOLATILE ORGANICS IN AIR	**TO-15**						Analyst: JJ	
1,1-Dichloroethane	< 250	250	< 1,010	1,010		500	7/5/2018	75-34-3
1,1-Dichloroethene	< 250	250	< 993	993		500	7/5/2018	75-35-4
1,2-Dichlorobenzene	< 250	250	< 1,500	1,500		500	7/5/2018	95-50-1
1,2-Dichloroethane	< 250	250	< 1,010	1,010		500	7/5/2018	107-06-2
2-Butanone (MEK)	< 2,500	2,500	< 7,380	7,380		500	7/5/2018	78-93-3
Acetone	< 2,500	2,500	< 5,950	5,950		500	7/5/2018	67-64-1
Benzene	< 250	250	< 798	798		500	7/5/2018	71-43-2
Chlorobenzene	< 250	250	《 1,150	1,150		500	7/5/2018	108-90-7
Chloroform	< 250	250	< 1,220	1,220		500	7/5/2018	67-66-3
cis-1,2-Dichloroethene	**360**	**250**	**1,426**	**990**		500	7/5/2018	156-59-2
Dichlorodifluoromethane(F-12)	< 500	500	< 2,480	2,480		500	7/5/2018	75-71-8
Ethylbenzene	< 250	250	< 1,090	1,090		500	7/5/2018	100-41-4
m&p-Xylene	< 500	500	< 2,170	2,170		500	7/5/2018	179601-23-1
Methylene chloride	< 1,000	1,000	< 3,470	3,470		500	7/5/2018	75-09-2
o-Xylene	< 250	250	< 1,090	1,090		500	7/5/2018	95-47-6
Tetrachloroethene	< 500	500	< 3,390	3,390		500	7/5/2018	127-18-4
Tetrahydrofuran	< 1,000	1,000	< 2,950	2,950		500	7/5/2018	109-99-9
Toluene	< 250	250	< 943	943		500	7/5/2018	108-88-3
trans-1,2-Dichloroethene	< 250	250	< 990	990		500	7/5/2018	156-60-5
Trichloroethene	**5,780**	**250**	**31,000**	**1,340**		500	7/5/2018	79-01-6
Trichlorofluoromethane(F-11)	< 250	250	< 1,410	1,410		500	7/5/2018	75-69-4
Trichlorotrifluoroethane(F-113)	**1,510**	**250**	**11,600**	**1,920**		500	7/5/2018	76-13-1
Vinyl chloride	< 250	250	< 640	640		500	7/5/2018	75-01-4
Surr: 4-Bromofluorobenzene	80.9	70-130	%REC					

Airtech Environmental Laboratories (AEL) - AZ 0740

4620 E.Elwood St., Suite 13, Phoenix, AZ 85040 480-968-5888 Fax 480-966-1888

Client:	WOOD	**Client Sample ID:**	TSSV-PW-SG-062018
Project:	Cave Creek Landfill	**Project Number:**	14-2014-2034
Lab Order:	18F027	**Collection:**	6/20/2018
Lab ID:	26	**Matrix:**	Soil vapor

	ppbv		ug/M^3				Date	
Analyses	**Result**	**Limit**	**Result**	**Limit**	**Qual**	**DF**	**Analyzed**	**CAS#**
VOLATILE ORGANICS IN AIR	**TO-15**						Analyst: JJ	
1,1-Dichloroethane	< 50	50	< 203	203		100	7/5/2018	75-34-3
1,1-Dichloroethene	< 50	50	< 199	199		100	7/5/2018	75-35-4
1,2-Dichlorobenzene	< 50	50	< 301	301		100	7/5/2018	95-50-1
1,2-Dichloroethane	< 50	50	< 203	203		100	7/5/2018	107-06-2
2-Butanone (MEK)	< 500	500	< 1,480	1,480		100	7/5/2018	78-93-3
Acetone	< 500	500	< 1,190	1,190		100	7/5/2018	67-64-1
Benzene	< 50	50	< 160	160		100	7/5/2018	71-43-2
Chlorobenzene	< 50	50	< 230	230		100	7/5/2018	108-90-7
Chloroform	< 50	50	< 244	244		100	7/5/2018	67-66-3
cis-1,2-Dichloroethene	**62**	**50**	**246**	**198**		100	7/5/2018	156-59-2
Dichlorodifluoromethane(F-12)	< 100	100	< 495	495		100	7/5/2018	75-71-8
Ethylbenzene	< 50	50	< 217	217		100	7/5/2018	100-41-4
m&p-Xylene	< 100	100	< 434	434		100	7/5/2018	179601-23-1
Methylene chloride	< 200	200	< 694	694		100	7/5/2018	75-09-2
o-Xylene	< 50	50	< 217	217		100	7/5/2018	95-47-6
Tetrachloroethene	**130**	**100**	**881**	**678**		100	7/5/2018	127-18-4
Tetrahydrofuran	< 200	200	< 590	590		100	7/5/2018	109-99-9
Toluene	< 50	50	< 189	189		100	7/5/2018	108-88-3
trans-1,2-Dichloroethene	< 50	50	< 198	198		100	7/5/2018	156-60-5
Trichloroethene	**2,460**	**50**	**13,200**	**269**		100	7/5/2018	79-01-6
Trichlorofluoromethane(F-11)	< 50	50	< 281	281		100	7/5/2018	75-69-4
Trichlorotrifluoroethane(F-113)	**81**	**50**	**620**	**383**		100	7/5/2018	76-13-1
Vinyl chloride	< 50	50	< 128	128		100	7/5/2018	75-01-4
Surr: 4-Bromofluorobenzene	80.5	70-130	%REC					

Airtech Environmental Laboratories (AEL) - AZ 0740

4620 E.Elwood St., Suite 13, Phoenix, AZ 85040 480-968-5888 Fax 480-966-1888

Client:	WOOD	**Client Sample ID:**	SVE-1-SG-062018
Project:	Cave Creek Landfill	**Project Number:**	14-2014-2034
Lab Order:	18F027	**Collection:**	6/20/2018
Lab ID:	27	**Matrix:**	Soil vapor

	ppbv		ug/M^3				Date	
Analyses	**Result**	**Limit**	**Result**	**Limit**	**Qual**	**DF**	**Analyzed**	**CAS#**
VOLATILE ORGANICS IN AIR	**TO-15**						Analyst: JJ	
1,1-Dichloroethane	< 50	50	< 203	203		100	7/5/2018	75-34-3
1,1-Dichloroethene	**128**	**50**	**508**	**199**		100	7/5/2018	75-35-4
1,2-Dichlorobenzene	**115**	**50**	**691**	**301**		100	7/5/2018	95-50-1
1,2-Dichloroethane	< 50	50	< 203	203		100	7/5/2018	107-06-2
2-Butanone (MEK)	< 500	500	< 1,480	1,480		100	7/5/2018	78-93-3
Acetone	< 500	500	< 1,190	1,190		100	7/5/2018	67-64-1
Benzene	< 50	50	< 160	160		100	7/5/2018	71-43-2
Chlorobenzene	**1,820**	**50**	**8,370**	**230**		100	7/5/2018	108-90-7
Chloroform	**63**	**50**	**307**	**244**		100	7/5/2018	67-66-3
cis-1,2-Dichloroethene	**353**	**50**	**1,400**	**198**		100	7/5/2018	156-59-2
Dichlorodifluoromethane(F-12)	< 100	100	< 495	495		100	7/5/2018	75-71-8
Ethylbenzene	< 50	50	< 217	217		100	7/5/2018	100-41-4
m&p-Xylene	< 100	100	< 434	434		100	7/5/2018	179601-23-1
Methylene chloride	< 200	200	< 694	694		100	7/5/2018	75-09-2
o-Xylene	< 50	50	< 217	217		100	7/5/2018	95-47-6
Tetrachloroethene	**415**	**100**	**2,810**	**678**		100	7/5/2018	127-18-4
Tetrahydrofuran	< 200	200	< 590	590		100	7/5/2018	109-99-9
Toluene	< 50	50	< 189	189		100	7/5/2018	108-88-3
trans-1,2-Dichloroethene	< 50	50	< 198	198		100	7/5/2018	156-60-5
Trichloroethene	**3,600**	**250**	**19,300**	**1,340**		500	7/5/2018	79-01-6
Trichlorofluoromethane(F-11)	< 50	50	< 281	281		100	7/5/2018	75-69-4
Trichlorotrifluoroethane(F-113)	**168**	**50**	**1,287**	**383**		100	7/5/2018	76-13-1
Vinyl chloride	< 50	50	< 128	128		100	7/5/2018	75-01-4
Surr: 4-Bromofluorobenzene	81.4	70-130	%REC					

Airtech Environmental Laboratories (AEL) - AZ 0740

4620 E.Elwood St., Suite 13, Phoenix, AZ 85040 480-968-5888 Fax 480-966-1888

Client:	WOOD	**Client Sample ID:**	N/A
Project:	Cave Creek Landfill	**Project Number:**	14-2014-2034
Lab Order:	18F027	**Collection:**	N/A
Lab ID:	Blank	**Matrix:**	Nitrogen

Method QC Data

Batch: MS010626 Analyst: JJ

Analyses	ppbv Result	ppbv Limit	ug/M^3 Result	ug/M^3 Limit	Qual	DF	Date Analyzed	CAS#
VOLATILE ORGANICS IN AIR		**TO-15**					Analyst: JJ	
1,1-Dichloroethane	< 0.5	0.5	< 2.03	2.03		1	6/26/2018	75-34-3
1,1-Dichloroethene	< 0.5	0.5	< 1.99	1.99		1	6/26/2018	75-35-4
1,2-Dichlorobenzene	< 0.5	0.5	< 3.01	3.01		1	6/26/2018	95-50-1
1,2-Dichloroethane	< 0.5	0.5	< 2.03	2.03		1	6/26/2018	107-06-2
2-Butanone (MEK)	< 5.0	5.0	< 14.8	14.8		1	6/26/2018	78-93-3
Acetone	< 5.0	5.0	< 11.9	11.9		1	6/26/2018	67-64-1
Benzene	< 0.5	0.5	< 1.60	1.60		1	6/26/2018	71-43-2
Chlorobenzene	< 0.5	0.5	< 2.30	2.30		1	6/26/2018	108-90-7
Chloroform	< 0.5	0.5	< 2.44	2.44		1	6/26/2018	67-66-3
cis-1,2-Dichloroethene	< 0.5	0.5	< 1.98	1.98		1	6/26/2018	156-59-2
Dichlorodifluoromethane(F-12)	< 1.0	1.0	< 4.95	4.95		1	6/26/2018	75-71-8
Ethylbenzene	< 0.5	0.5	< 2.17	2.17		1	6/26/2018	100-41-4
m&p-Xylene	< 1.0	1.0	< 4.34	4.34		1	6/26/2018	179601-23-1
Methylene chloride	< 2.0	2.0	< 6.94	6.94		1	6/26/2018	75-09-2
o-Xylene	< 0.5	0.5	< 2.17	2.17		1	6/26/2018	95-47-6
Tetrachloroethene	< 1.0	1.0	< 6.78	6.78		1	6/26/2018	127-18-4
Tetrahydrofuran	< 2.0	2.0	< 5.90	5.90		1	6/26/2018	109-99-9
Toluene	< 0.5	0.5	< 1.89	1.89		1	6/26/2018	108-88-3
trans-1,2-Dichloroethene	< 0.5	0.5	< 1.98	1.98		1	6/26/2018	156-60-5
Trichloroethene	< 0.5	0.5	< 2.69	2.69		1	6/26/2018	79-01-6
Trichlorofluoromethane(F-11)	< 0.5	0.5	< 2.81	2.81		1	6/26/2018	75-69-4
Trichlorotrifluoroethane(F-113)	< 0.5	0.5	< 3.83	3.83		1	6/26/2018	76-13-1
Vinyl chloride	< 0.5	0.5	< 1.28	1.28		1	6/26/2018	75-01-4
Surr: 4-Bromofluorobenzene	92.5	70-130	%REC					

Airtech Environmental Laboratories (AEL) - AZ 0740

4620 E.Elwood St., Suite 13, Phoenix, AZ 85040 480-968-5888 Fax 480-966-1888

Client:	WOOD	**Client Sample ID:**	N/A
Project:	Cave Creek Landfill	**Project Number:**	14-2014-2034
Lab Order:	18F027	**Collection:**	N/A
Lab ID:	LCS/LCSD	**Matrix:**	Nitrogen

Method QC Data

Date Analyzed: 6/26/2018 Batch: MS010626 Analyst: JJ

Analyses	LCS Result	LCS %REC	LCSD Result	LCSD %REC	T.V.	%RPD	Unit	Qualifier LCS	Qualifier LCSD	Qualifier RPD
VOLATILE ORGANICS IN AIR	**TO-15**							70-130%		<25%
Dichlorodifluoromethane(F-12)	9.5	94.8	10.0	99.6	10.0	4.9	ppbv			
Vinyl Chloride	9.8	97.8	10.6	106	10.0	7.6	ppbv			
Trichlorofluoromethane (F-11)	10.2	102	10.4	104	10.0	1.6	ppbv			
Acetone	10.2	102	10.4	104	10.0	2.6	ppbv			
1,1-Dichloroethene	10.5	105	10.6	106	10.0	0.3	ppbv			
Trichlorotrifluoroethane (F-113)	9.9	99.1	10.0	99.5	10.0	0.4	ppbv			
Methylene Chloride	10.3	103	10.4	104	10.0	1.4	ppbv			
trans-1,2-Dichloroethene	9.6	95.8	9.7	96.7	10.0	0.9	ppbv			
1,1-Dichloroethane	10.2	102	10.1	101	10.0	1.0	ppbv			
2-Butanone (MEK)	10.3	103	10.4	104	10.0	0.8	ppbv			
cis-1,2-Dichloroethene	9.8	97.8	9.9	99.1	10.0	1.3	ppbv			
Chloroform	10.2	102	10.0	100	10.0	2.0	ppbv			
Tetrahydrofuran	10.6	106	10.3	103	10.0	3.2	ppbv			
1,2-Dichloroethane	10.2	102	10.0	99.6	10.0	2.7	ppbv			
Benzene	10.0	99.9	9.8	97.5	10.0	2.4	ppbv			
Trichloroethene	9.4	94.1	9.3	92.6	10.0	1.6	ppbv			
Toluene	9.8	97.6	9.4	94.1	10.0	3.7	ppbv			
Tetrachloroethene	9.4	94.1	9.1	90.6	10.0	3.8	ppbv			
Chlorobenzene	9.3	92.6	9.0	90.2	10.0	2.6	ppbv			
Ethylbenzene	9.9	98.9	9.5	94.8	10.0	4.2	ppbv			
m&p-Xylene	19.6	98.2	19.3	96.4	20.0	1.9	ppbv			
o-Xylene	9.6	95.8	9.5	94.8	10.0	1.0	ppbv			
1,2-Dichlorobenzene	9.3	93.4	9.1	90.5	10.0	3.2	ppbv			
Surr: 4-Bromofluorobenzene	10.4	104	10.5	105		1.2	%REC			
		70-130%		70-130%						

Airtech Environmental Laboratories (AEL) - AZ 0740

4620 E.Elwood St., Suite 13, Phoenix, AZ 85040 480-968-5888 Fax 480-966-1888

Client:	WOOD	**Client Sample ID:**	N/A
Project:	Cave Creek Landfill	**Project Number:**	14-2014-2034
Lab Order:	18F027	**Collection:**	N/A
Lab ID:	Blank	**Matrix:**	Nitrogen

Method QC Data

Batch: MS010629 Analyst: JJ

Analyses	ppbv Result	ppbv Limit	ug/M^3 Result	ug/M^3 Limit	Qual	DF	Date Analyzed	CAS#
VOLATILE ORGANICS IN AIR		**TO-15**					Analyst: JJ	
1,1-Dichloroethane	< 0.5	0.5	< 2.03	2.03		1	6/29/2018	75-34-3
1,1-Dichloroethene	< 0.5	0.5	< 1.99	1.99		1	6/29/2018	75-35-4
1,2-Dichlorobenzene	< 0.5	0.5	< 3.01	3.01		1	6/29/2018	95-50-1
1,2-Dichloroethane	< 0.5	0.5	< 2.03	2.03		1	6/29/2018	107-06-2
2-Butanone (MEK)	< 5.0	5.0	< 14.8	14.8		1	6/29/2018	78-93-3
Acetone	< 5.0	5.0	< 11.9	11.9		1	6/29/2018	67-64-1
Benzene	< 0.5	0.5	< 1.60	1.60		1	6/29/2018	71-43-2
Chlorobenzene	< 0.5	0.5	< 2.30	2.30		1	6/29/2018	108-90-7
Chloroform	< 0.5	0.5	< 2.44	2.44		1	6/29/2018	67-66-3
cis-1,2-Dichloroethene	< 0.5	0.5	< 1.98	1.98		1	6/29/2018	156-59-2
Dichlorodifluoromethane(F-12)	< 1.0	1.0	< 4.95	4.95		1	6/29/2018	75-71-8
Ethylbenzene	< 0.5	0.5	< 2.17	2.17		1	6/29/2018	100-41-4
m&p-Xylene	< 1.0	1.0	< 4.34	4.34		1	6/29/2018	179601-23-1
Methylene chloride	< 2.0	2.0	< 6.94	6.94		1	6/29/2018	75-09-2
o-Xylene	< 0.5	0.5	< 2.17	2.17		1	6/29/2018	95-47-6
Tetrachloroethene	< 1.0	1.0	< 6.78	6.78		1	6/29/2018	127-18-4
Tetrahydrofuran	< 2.0	2.0	< 5.90	5.90		1	6/29/2018	109-99-9
Toluene	< 0.5	0.5	< 1.89	1.89		1	6/29/2018	108-88-3
trans-1,2-Dichloroethene	< 0.5	0.5	< 1.98	1.98		1	6/29/2018	156-60-5
Trichloroethene	< 0.5	0.5	< 2.69	2.69		1	6/29/2018	79-01-6
Trichlorofluoromethane(F-11)	< 0.5	0.5	< 2.81	2.81		1	6/29/2018	75-69-4
Trichlorotrifluoroethane(F-113)	< 0.5	0.5	< 3.83	3.83		1	6/29/2018	76-13-1
Vinyl chloride	< 0.5	0.5	< 1.28	1.28		1	6/29/2018	75-01-4
Surr: 4-Bromofluorobenzene	89.8	70-130	%REC					

Airtech Environmental Laboratories (AEL) - AZ 0740

4620 E.Elwood St., Suite 13, Phoenix, AZ 85040 480-968-5888 Fax 480-966-1888

Client:	WOOD	**Client Sample ID:**	N/A
Project:	Cave Creek Landfill	**Project Number:**	14-2014-2034
Lab Order:	18F027	**Collection:**	N/A
Lab ID:	LCS/LCSD	**Matrix:**	Nitrogen

Method QC Data

Date Analyzed: 6/29/2018 Batch: MS010629 Analyst: JJ

Analyses	LCS Result	LCS %REC	LCSD Result	LCSD %REC	T.V.	%RPD	Unit	Qualifier LCS	Qualifier LCSD	Qualifier RPD
VOLATILE ORGANICS IN AIR	**TO-15**							70-130%		<25%
Dichlorodifluoromethane(F-12)	9.7	97.0	9.7	96.7	10.0	0.3	ppbv			
Vinyl Chloride	9.0	89.6	9.1	90.9	10.0	1.4	ppbv			
Trichlorofluoromethane (F-11)	9.6	96.3	10.4	104	10.0	7.8	ppbv			
Acetone	9.0	89.8	9.6	96.2	10.0	6.9	ppbv			
1,1-Dichloroethene	8.8	88.2	9.5	94.8	10.0	7.2	ppbv			
Trichlorotrifluoroethane (F-113)	9.5	94.5	10.2	102	10.0	7.4	ppbv			
Methylene Chloride	8.7	86.9	9.4	93.6	10.0	7.4	ppbv			
trans-1,2-Dichloroethene	9.4	94.2	10.2	102	10.0	7.5	ppbv			
1,1-Dichloroethane	8.9	89.2	9.5	94.9	10.0	6.2	ppbv			
2-Butanone (MEK)	9.9	98.9	11.0	110	10.0	10.6	ppbv			
cis-1,2-Dichloroethene	9.4	94.3	10.2	102	10.0	7.4	ppbv			
Chloroform	9.3	93.0	10.0	100	10.0	7.5	ppbv			
Tetrahydrofuran	9.3	92.5	10.4	104	10.0	11.2	ppbv			
1,2-Dichloroethane	9.0	89.8	9.9	99.3	10.0	10.0	ppbv			
Benzene	9.2	91.6	10.0	100	10.0	8.8	ppbv			
Trichloroethene	10.6	106	11.6	116	10.0	8.9	ppbv			
Toluene	10.0	99.6	11.2	112	10.0	11.5	ppbv			
Tetrachloroethene	11.0	110	12.1	121	10.0	9.1	ppbv			
Chlorobenzene	10.3	103	11.5	115	10.0	11.4	ppbv			
Ethylbenzene	10.2	102	11.4	114	10.0	11.0	ppbv			
m&p-Xylene	20.8	104	23.4	117	20.0	11.7	ppbv			
o-Xylene	10.4	104	11.6	116	10.0	10.8	ppbv			
1,2-Dichlorobenzene	11.2	112	12.6	126	10.0	12.0	ppbv			
Surr: 4-Bromofluorobenzene	9.9	98.8	9.8	98.0			%REC			
		70-130%		70-130%						

Airtech Environmental Laboratories (AEL) - AZ 0740

4620 E.Elwood St., Suite 13, Phoenix, AZ 85040 480-968-5888 Fax 480-966-1888

Client:	WOOD	**Client Sample ID:**	N/A
Project:	Cave Creek Landfill	**Project Number:**	14-2014-2034
Lab Order:	18F027	**Collection:**	N/A
Lab ID:	Blank	**Matrix:**	Nitrogen

Method QC Data

Batch: MS010705 Analyst: JJ

Analyses	ppbv Result	ppbv Limit	ug/M^3 Result	ug/M^3 Limit	Qual	DF	Date Analyzed	CAS#
VOLATILE ORGANICS IN AIR		**TO-15**					Analyst: JJ	
1,1-Dichloroethane	< 0.5	0.5	< 2.03	2.03		1	7/5/2018	75-34-3
1,1-Dichloroethene	< 0.5	0.5	< 1.99	1.99		1	7/5/2018	75-35-4
1,2-Dichlorobenzene	< 0.5	0.5	< 3.01	3.01		1	7/5/2018	95-50-1
1,2-Dichloroethane	< 0.5	0.5	< 2.03	2.03		1	7/5/2018	107-06-2
2-Butanone (MEK)	< 5.0	5.0	< 14.8	14.8		1	7/5/2018	78-93-3
Acetone	< 5.0	5.0	< 11.9	11.9		1	7/5/2018	67-64-1
Benzene	< 0.5	0.5	< 1.60	1.60		1	7/5/2018	71-43-2
Chlorobenzene	< 0.5	0.5	< 2.30	2.30		1	7/5/2018	108-90-7
Chloroform	< 0.5	0.5	< 2.44	2.44		1	7/5/2018	67-66-3
cis-1,2-Dichloroethene	< 0.5	0.5	< 1.98	1.98		1	7/5/2018	156-59-2
Dichlorodifluoromethane(F-12)	< 1.0	1.0	< 4.95	4.95		1	7/5/2018	75-71-8
Ethylbenzene	< 0.5	0.5	< 2.17	2.17		1	7/5/2018	100-41-4
m&p-Xylene	< 1.0	1.0	< 4.34	4.34		1	7/5/2018	179601-23-1
Methylene chloride	< 2.0	2.0	< 6.94	6.94		1	7/5/2018	75-09-2
o-Xylene	< 0.5	0.5	< 2.17	2.17		1	7/5/2018	95-47-6
Tetrachloroethene	< 1.0	1.0	< 6.78	6.78		1	7/5/2018	127-18-4
Tetrahydrofuran	< 2.0	2.0	< 5.90	5.90		1	7/5/2018	109-99-9
Toluene	< 0.5	0.5	< 1.89	1.89		1	7/5/2018	108-88-3
trans-1,2-Dichloroethene	< 0.5	0.5	< 1.98	1.98		1	7/5/2018	156-60-5
Trichloroethene	< 0.5	0.5	< 2.69	2.69		1	7/5/2018	79-01-6
Trichlorofluoromethane(F-11)	< 0.5	0.5	< 2.81	2.81		1	7/5/2018	75-69-4
Trichlorotrifluoroethane(F-113)	< 0.5	0.5	< 3.83	3.83		1	7/5/2018	76-13-1
Vinyl chloride	< 0.5	0.5	< 1.28	1.28		1	7/5/2018	75-01-4
Surr: 4-Bromofluorobenzene	82.9	70-130	%REC					

Airtech Environmental Laboratories (AEL) - AZ 0740

4620 E.Elwood St., Suite 13, Phoenix, AZ 85040 480-968-5888 Fax 480-966-1888

Client:	WOOD	**Client Sample ID:**	N/A
Project:	Cave Creek Landfill	**Project Number:**	14-2014-2034
Lab Order:	18F027	**Collection:**	N/A
Lab ID:	LCS/LCSD	**Matrix:**	Nitrogen

Method QC Data

Date Analyzed: 7/5/2018 Batch: MS010705 Analyst: JJ

Analyses	LCS Result	LCS %REC	LCSD Result	LCSD %REC	T.V.	%RPD	Unit	Qualifier LCS	Qualifier LCSD	Qualifier RPD
VOLATILE ORGANICS IN AIR	**TO-15**							70-130%		<25%
Dichlorodifluoromethane(F-12)	8.5	84.7	9.1	91.1	10.0	7.3	ppbv			
Vinyl Chloride	10.6	106	11.5	115	10.0	7.8	ppbv			
Trichlorofluoromethane (F-11)	8.4	83.8	8.8	87.8	10.0	4.7	ppbv			
Acetone	9.1	91.0	9.1	91.3	10.0	0.3	ppbv			
1,1-Dichloroethene	8.1	80.6	8.6	85.5	10.0	5.9	ppbv			
Trichlorotrifluoroethane (F-113)	9.1	91.2	9.2	92.4	10.0	1.3	ppbv			
Methylene Chloride	7.9	79.4	8.4	84.2	10.0	5.9	ppbv			
trans-1,2-Dichloroethene	9.7	96.8	9.6	95.6	10.0	1.2	ppbv			
1,1-Dichloroethane	8.8	87.8	9.1	90.6	10.0	3.1	ppbv			
2-Butanone (MEK)	9.4	94.2	9.5	95.3	10.0	1.2	ppbv			
cis-1,2-Dichloroethene	9.8	98.0	9.7	96.9	10.0	1.1	ppbv			
Chloroform	8.6	86.1	8.8	87.9	10.0	2.1	ppbv			
Tetrahydrofuran	9.0	90.1	9.4	94.2	10.0	4.4	ppbv			
1,2-Dichloroethane	8.3	82.9	8.6	85.6	10.0	3.2	ppbv			
Benzene	9.7	96.6	9.8	98.2	10.0	1.6	ppbv			
Trichloroethene	9.7	96.5	9.5	94.6	10.0	2.0	ppbv			
Toluene	9.8	97.8	9.7	97.2	10.0	0.6	ppbv			
Tetrachloroethene	9.4	94.1	9.4	93.9	10.0	0.2	ppbv			
Chlorobenzene	9.9	99.3	10.0	99.5	10.0	0.2	ppbv			
Ethylbenzene	10.0	99.5	10.0	100	10.0	0.8	ppbv			
m&p-Xylene	19.7	98.6	20.4	102	20.0	3.3	ppbv			
o-Xylene	10.0	99.5	10.0	100	10.0	0.9	ppbv			
1,2-Dichlorobenzene	10.1	101	10.1	101	10.0	0.2	ppbv			
Surr: 4-Bromofluorobenzene	9.5	95.3	9.7	97.0		1.8	%REC			
		70-130%		70-130%						

Airtech Environmental Laboratories (AEL) - AZ 0740

4620 E.Elwood St., Suite 13, Phoenix, AZ 85040 480-968-5888 Fax 480-966-1888

Client:	WOOD	**Client Sample ID:**	NA
Project:	Cave Creek Landfill	**Project Number:**	14-2014-2034
Lab Order:	18F027	**Collection:**	NA
Lab ID:	Standards	**Matrix:**	Nitrogen

AEL ID#	STD Name	Vendor	SGI Order#	Description	CONC.	Accuracy	Exp.Date
S-170623-01	Stock	Spectra Gases	113123527	TO-14 39 Analytes	1.0 ppmv	5%	7/23/2018
S-170824-01	Stock	Spectra Gases	113123527	TO-15 25 Analytes	1.0 ppmv	5%	8/24/2018
S-170623-02	Stock	Spectra Gases	113123527	15 Additional Compounds	1.0 ppmv	5%	7/23/2018
S-171019-01	Stock	Spectra Gases	114560630	TO-15 IS 4 Compounds	1.0 ppmv	5%	10/19/2018
A-180515-01	Working Std	AEL Dilution		TO-15 74 Analytes	10 ppbv	5%	7/23/2018
A-180528-01	Working IS	AEL Dilution		TO-15 IS 4 Compounds	50 ppbv	5%	8/28/2018

Airtech Environmental Laboratories (AEL)

Chain of Custody

4620 E.Elwood Street, Suite 13, Phoenix, AZ 85040 480-968-5888 (phone) 480-966-1888 (fax)

Customer :	Amec Foster Wheeler / Wood	Page 1 of 3	AEL Lab #
Address:	4600 East Washington Street, Suite #600	Sampler: Eric Miller Phone: (602) 300-8313	18F027
		Project Name: Cave Creek Landfill Project Number: 14-2014-2020	
City, State, Zip:	Phoenix, AZ 85034	Project location: Cave Creek, AZ	
Contact:	~~Alex Yiannakakis~~	P.O. Number:	
Phone: (602) 733-6000	Fax: (602) 733-6100	Fax Results: Y N	
E-Mail Address:	~~alex.yiannakakis~~@amec.com	E-Mail Results: Y N	

Sample Receipt	Turn Around Request	Sample Type
Temperature_____ °C	_____ 24 Hours _____ 48 Hours	SVE: soil vapor extraction GW: ground water
Custody Seals: Yes_____ No_____	_____ 72 Hours	A: ambient air WW: waste water
Custody Seals Intact: Yes_____ No_____	_____ 5 working Day	I: indoor air
Total # of Containers:_____	Y Standard 10 Working Days	S: soil vapor
		W: water

Sample Information

AEL Lab #	Serial # Canister	Serial # Grab	Canister (L) or bag	Grab (Min)	Client's Sample Identification	Sampled Date	Sampled Time	Sample Type	Number of Containers	~~TO-15 full list~~ Short List	TO-15 TPH(GRO)	TO-15 Selet List	8260B AZ Vapor full list	8260B Vapor select list	8015 GRO	8260B Water			DFA tracer cmpd. as TIC
01	1793	023	6 (1) bag	(1) 2 5	TSSV-2S-SG-061518	6.15.18	855	S	1	Y									Y
02	E2405	107	6 (1) bag	(1) 2 5	TSSV-2M-SG-061518		919			Y									Y
03	E2413	092	6 (1) bag	(1) 2 5	TSSV-2D-SG-061518		946			Y									Y
04	E2099	123	6 (1) bag	(1) 2 5	TSSV-2DZ-SG-061518		1011			Y									Y
05	E2280	022	6 (1) bag	(1) 2 5	TSSV-1S-SG-061518		1051			Y									Y
06	1838	072	6 (1) bag	(1) 2 5	TSSV-1M-SG-061518		1114			Y									Y
07	0743	048	6 (1) bag	(1) 2 5	TSSV-1D-SG-061518		1141			Y									Y
08	1826	197	6 (1) bag	(1) 2 5	TSSV-4M-SG-061518		1241			Y									Y
09	1887	144	6 (1) bag	(1) 2 5	TSSV-4DZ-SG-061518		1322			Y									Y
10	1851	035	6 (1) bag	(1) 2 5	DUP02-061518	↓	1350	↓	↓	Y									Y

Instructions / Special Requirements:

Date:	Time:	Samples Relinquished By:	Received By:
6.2018	1407	E. Mill	James Jones - Airtech

Airtech Environmental Laboratories (AEL)

Chain of Custody

4620 E.Elwood Street, Suite 13, Phoenix, AZ 85040 480-968-5888 (phone) 480-966-1888 (fax)

Customer : Wood.	Page 1 of 3		AEL Lab #
Address: 4600 East Washington Street, Suite #600	Sampler: Eric Miller	Phone: (602) 300-8313	18F027
	Project Name: Cave Creek Landfill	Project Number: 14-2017-2034	
City, State, Zip: Phoenix, AZ 85034	Project location: Cave Creek, AZ		
Contact: Emily Corkery / Samantha Sargent	P.O. Number:		
Phone: (602) 733-6000 Fax: (602) 733-6100	Fax Results: Y N		
E-Mail Address: Emily.Corkery@amecfw.com	E-Mail Results: (Y) N		

Sample Receipt

Temperature_____ °C
Custody Seals: Yes_____ No_____
Custody Seals Intact: Yes_____ No_____
Total # of Containers:_____

Turn Around Request

_____ 24 Hours _____ 48 Hours
_____ 72 Hours
_____ 5 working Day
✓ Standard 10 Working Days

Sample Type

SVE: soil vapor extraction
A: ambient air
I: indoor air
S: soil vapor
W: water
GW: ground water
WW: waste water

Analyses Requested

Sample Information

AEL Lab #	Serial # Canister	Serial # Grab	Canister (L) or bag	Grab (Min)	Client's Sample Identification	Sampled Date	Sampled Time	Sample Type	Number of Containers	TO-15 ~~full list~~ (SHORT LIST)	TO-15 TPH(GRO)	TO-15 Selet List	8260B AZ Vapor full list	8260B Vapor select list	8015 GRO	8260B Water			DFA tracer cmpd. as TIC
11	E2369	030	6 (1) bag	(1) 2 5	TSSV-4D-SG-061818	6.18.18	1038	S	1	✓									✓
12	1791	105	6 (1) bag	(1) 2 5	DUP03-061818	↓	1055	↓	↓	✓									✓
13	Z090	191	6 (1) bag	(1) 2 5	SUE-1S-SG-061818	↓	1205	↓	↓	✓									✓
14	E2087	117	6 (1) bag	(1) 2 5	SUE-1M-SG-061818	↓	1226	↓	↓	✓									✓
15	E2291	104	6 (1) bag	(1) 2 5	SUE-1D-SG-061818	↓	1256	↓	↓	✓									✓
16	E2299	193	6 (1) bag	(1) 2 5	SUE-2S-SG-062018	6.20.18	800	↓	↓	✓									✓
17	E2293	063	6 (1) bag	(1) 2 5	SUE-2M-SG-062018	↓	826	↓	↓	✓									✓
18	1847	028	6 (1) bag	(1) 2 5	SUE-3S-SG-062018	↓	852	↓	↓	✓									✓
19	E2411	046	6 (1) bag	(1) 2 5	SUE-3M-SG-062018	↓	923	↓	↓	✓									✓
20	E2399	158	6 (1) bag	(1) 2 5	SUE-3-SG-062018	↓	949	↓	↓	✓									✓

Instructions / Special Requirements:

Date:	Time:	Samples Relinquished By:	Received By:
6.20.18	1407	[signature]	James Jones Airtech

Airtech Environmental Laboratories (AEL)

Chain of Custody

4620 E.Elwood Street, Suite 13, Phoenix, AZ 85040 480-968-5888 (phone) 480-966-1888 (fax)

Customer: Wood	Page 3 of 3		AEL Lab #
Address: 4600 E WASHINGTON ST #600	Sampler: ERIC MILLER	Phone: (602) 300-8313	18F027
	Project Name: CAVECREEK LANDFILL	Project Number: 14-2017-2034	
City, State, Zip: PHOENIX, AZ	Project location: CAVE CREEK, AZ		
Contact: NATALIE.CHRISMAN@amecfw.com	P.O. Number:		
Phone: 602.733-6000 Fax:	Fax Results: Y N		
E-Mail Address:	E-Mail Results: Y N		

Sample Receipt	Turn Around Request	Sample Type
Temperature_____ °C	____ 24 Hours ____ 48 Hours	SVE: soil vapor extraction GW: ground water
Custody Seals: Yes____ No____	____ 72 Hours	A: ambient air WW: waste water
Custody Seals Intact: Yes____ No____	____ 5 working Day	I: indoor air
Total # of Containers:_____	X Standard 10 Working Days	S: soil vapor
		W: water

Sample Information

AEL Lab #	Serial # Canister	Serial # Grab	Canister (L) or bag	Grab (Min)	Client's Sample Identification	Sampled Date	Sampled Time	Sample Type	Number of Containers	TO-15 ~~full list~~ (SHORT LIST)	TO-15 TPH(GRO)	TO-15 Selet List	8260B AZ Vapor full list	8260B Vapor select list	8015 GRO	8260B Water			DFA tracer cmpd. as TIC
21	1885	075	6 1 bag	1 2 5	SUE-~~4M~~ 4S-SG-062018	6.20.18	1025	S	1	X									X
22	E2376	021	6 1 bag	1 2 5	SUE-4M-SG-062018	↓	1101	↓	↓	X									X
23	E2351	199	6 1 bag	1 2 5	SUE-4-SG-062018	↓	1120	↓	↓	X									X
24	E2361	135	6 1 bag	1 2 5	DUP04-062018	↓	1137	↓	↓	X									X
25	E2085	194	6 1 bag	1 2 5	SUE-2-SG-062018	↓	1150	↓	↓	X									X
26	E2367	065	6 1 bag	1 2 5	TSSV-PW-SG-062018	↓	1216	↓	↓	X									X
27	E2358	196	6 1 bag	1 2 5	SUE-1-SG-062018	↓	1240	↓	↓	X									X
			6 1 bag	1 2 5															
			6 1 bag	1 2 5															
			6 1 bag	1 2 5															

Instructions / Special Requirements:

Date:	Time:	Samples Relinquished By:	Received By:
6.20.18	1407	E. Mill	James Jones Airtech

Airtech Environmental Laboratories (AEL)
4620 E.Elwood St., Suite 13, Phoenix, AZ 85040 480-968-5888 Fax 480-966-1888

Date: July 17, 2018

Client:	Natalie Chrisman	Work Order #:	18F028
Company:	WOOD	Project Name:	Cave Creek Landfill
Address:	4600 E Washington St, #600	Project Number:	14-2014-2034
	Phoenix, AZ 85034	Received Date:	6/20/2018

Dear Client:

Airtech Environmental Laboratories received four (4) samples for analysis.

All analyses met laboratory QA/QC with any exceptions addressed in the Case Narrative.

If you have any questions or concerns regarding your samples analysis, please contact the laboratory at 480-968-5888

Sincerely,

Yu Min Shi
Technical Director
Airtech Environmental Labs

Arizona ADHS License No. AZ0740

Airtech Environmental Laboratories (AEL)

4620 E.Elwood St., Suite 13, Phoenix, AZ 85040 480-968-5888 Fax 480-966-1888

Date: July 17, 2018

Client:	Natalie Chrisman	Work Order #:	18F028
Company:	WOOD	Project Name:	Cave Creek Landfill
Address:	4600 E Washington St, #600	Project Number:	14-2014-2034
	Phoenix, AZ 85034	Received Date:	6/20/2018

SAMPLE SUMMARY

LAB ID	CLIENT ID	METHOD	SAMPLE DATE	SAMPLE TIME
18F028-01	SP4-H1-062018	TO-15	6/20/2018	710
18F028-02	SP3-C3-062018	TO-15	6/20/2018	715
18F028-03	SP2-C1-062018	TO-15	6/20/2018	720
18F028-04	SP1-SkidOutlet-062018	TO-15	6/20/2018	725

Airtech Environmental Laboratories (AEL)
4620 E.Elwood St., Suite 13, Phoenix, AZ 85040 480-968-5888 Fax 480-966-1888

Date: July 17, 2018

Client:	Natalie Chrisman	Work Order #:	18F028
Company:	WOOD	Project Name:	Cave Creek Landfill
Address:	4600 E Washington St, #600	Project Number:	14-2014-2034
	Phoenix, AZ 85034	Received Date:	06/20/18

Case Narrative

All samples and QC associated with your samples met the quality control objectives.
Data qualifiers in this report are in accordance with ADEQ Data Qualifiers.

Airtech Environmental Laboratories (AEL) - AZ 0740

4620 E.Elwood St., Suite 13, Phoenix, AZ 85040 480-968-5888 Fax 480-966-1888

Client:	WOOD	**Client Sample ID:**	N/A
Project:	Cave Creek Landfill	**Project Number:**	14-2014-2034
Lab Order:	18F028	**Collection:**	N/A
Lab ID:	Kits QC	**Matrix:**	Air

		Canister				Grab Sampler	
		Type		Vacuum	Pressure	Type	
	Client	1.0 liter		before sampled	after sampled	1 minute-fill 1.0L canister	
AEL#	ID	SN#	Clean Batch#	Hg inch	psia	SN#	Clean Batch#
18F028-01	SP4-H1-062018	E2404	1806-07	29.0	13.78	014	1803-13
18F028-02	SP3-C3-062018	E2294	1806-14	29.0	14.06	074	1805-03
18F028-03	SP2-C1-062018	E2394	1806-14	29.0	14.41	150	1805-03
18F028-04	SP1-SkidOutlet-062018	E2296	1806-07	29.0	14.44	071	1803-13

Airtech Environmental Laboratories (AEL) - AZ 0740

4620 E.Elwood St., Suite 13, Phoenix, AZ 85040 480-968-5888 Fax 480-966-1888

Client:	WOOD	**Client Sample ID:**	SP4-H1-062018
Project:	Cave Creek Landfill	**Project Number:**	14-2014-2034
Lab Order:	18F028	**Collection:**	6/20/2018
Lab ID:	01	**Matrix:**	Soil vapor

	ppbv		ug/M^3				Date	
Analyses	**Result**	**Limit**	**Result**	**Limit**	**Qual**	**DF**	**Analyzed**	**CAS#**
VOLATILE ORGANICS IN AIR		**TO-15**					Analyst: JJ	
1,1-Dichloroethane	< 10	10	< 40.5	40.5		20	7/13/2018	75-34-3
1,1-Dichloroethene	< 10	10	< 39.7	39.7		20	7/13/2018	75-35-4
1,2-Dichlorobenzene	< 10	10	< 60.1	60.1		20	7/13/2018	95-50-1
1,2-Dichloroethane	< 10	10	< 40.5	40.5		20	7/13/2018	107-06-2
2-Butanone (MEK)	< 100	100	< 295	295		20	7/13/2018	78-93-3
Acetone	< 100	100	< 238	238		20	7/13/2018	67-64-1
Benzene	< 10	10	< 31.9	31.9		20	7/13/2018	71-43-2
Chlorobenzene	< 10	10	< 46.0	46.0		20	7/13/2018	108-90-7
Chloroform	< 10	10	< 48.8	48.8		20	7/13/2018	67-66-3
cis-1,2-Dichloroethene	< 10	10	< 39.6	39.6		20	7/13/2018	156-59-2
Dichlorodifluoromethane(F-12)	**129**	**20**	**641**	**99.0**		20	7/13/2018	75-71-8
Ethylbenzene	< 10	10	< 43.4	43.4		20	7/13/2018	100-41-4
m&p-Xylene	< 20	20	< 86.8	86.8		20	7/13/2018	179601-23-1
Methylene chloride	< 40	40	< 139	139		20	7/13/2018	75-09-2
o-Xylene	< 10	10	< 43.4	43.4		20	7/13/2018	95-47-6
Tetrachloroethene	**328**	**20**	**2,220**	**136**		20	7/13/2018	127-18-4
Tetrahydrofuran	< 40	40	< 118	118		20	7/13/2018	109-99-9
Toluene	< 10	10	< 37.7	37.7		20	7/13/2018	108-88-3
trans-1,2-Dichloroethene	< 10	10	< 39.6	39.6		20	7/13/2018	156-60-5
Trichloroethene	< 10	10	< 53.7	53.7		20	7/13/2018	79-01-6
Trichlorofluoromethane(F-11)	< 10	10	< 56.2	56.2		20	7/13/2018	75-69-4
Trichlorotrifluoroethane(F-113)	< 10	10	< 76.6	76.6		20	7/13/2018	76-13-1
Vinyl chloride	< 10	10	< 25.6	25.6		20	7/13/2018	75-01-4
Surr: 4-Bromofluorobenzene	89.6	70-130	%REC					

Airtech Environmental Laboratories (AEL) - AZ 0740

4620 E.Elwood St., Suite 13, Phoenix, AZ 85040 480-968-5888 Fax 480-966-1888

Client:	WOOD	**Client Sample ID:**	SP3-C3-062018
Project:	Cave Creek Landfill	**Project Number:**	14-2014-2034
Lab Order:	18F028	**Collection:**	6/20/2018
Lab ID:	02	**Matrix:**	Soil vapor

	ppbv		ug/M^3				Date	
Analyses	**Result**	**Limit**	**Result**	**Limit**	**Qual**	**DF**	**Analyzed**	**CAS#**
VOLATILE ORGANICS IN AIR	**TO-15**						Analyst: JJ	
1,1-Dichloroethane	< 1.0	1.0	< 4.05	4.05		2	7/13/2018	75-34-3
1,1-Dichloroethene	**1.0**	**1.0**	**4.13**	**3.97**		2	7/13/2018	75-35-4
1,2-Dichlorobenzene	< 1.0	1.0	< 6.01	6.01		2	7/13/2018	95-50-1
1,2-Dichloroethane	< 1.0	1.0	< 4.05	4.05		2	7/13/2018	107-06-2
2-Butanone (MEK)	< 10	10	< 29.5	29.5		2	7/13/2018	78-93-3
Acetone	< 10	10	< 23.8	23.8		2	7/13/2018	67-64-1
Benzene	< 1.0	1.0	< 3.19	3.19		2	7/13/2018	71-43-2
Chlorobenzene	< 1.0	1.0	< 4.60	4.60		2	7/13/2018	108-90-7
Chloroform	< 1.0	1.0	< 4.88	4.88		2	7/13/2018	67-66-3
cis-1,2-Dichloroethene	< 1.0	1.0	< 3.96	3.96		2	7/13/2018	156-59-2
Dichlorodifluoromethane(F-12)	**126**	**20**	**623**	**99.0**		20	7/13/2018	75-71-8
Ethylbenzene	< 1.0	1.0	< 4.34	4.34		2	7/13/2018	100-41-4
m&p-Xylene	< 2.0	2.0	< 8.68	8.68		2	7/13/2018	179601-23-1
Methylene chloride	**4.7**	**4.0**	**16.4**	**13.9**		2	7/13/2018	75-09-2
o-Xylene	< 1.0	1.0	< 4.34	4.34		2	7/13/2018	95-47-6
Tetrachloroethene	< 2.0	2.0	< 13.6	13.6		2	7/13/2018	127-18-4
Tetrahydrofuran	< 4.0	4.0	< 11.8	11.8		2	7/13/2018	109-99-9
Toluene	< 1.0	1.0	< 3.77	3.77		2	7/13/2018	108-88-3
trans-1,2-Dichloroethene	< 1.0	1.0	< 3.96	3.96		2	7/13/2018	156-60-5
Trichloroethene	< 1.0	1.0	< 5.37	5.37		2	7/13/2018	79-01-6
Trichlorofluoromethane(F-11)	< 1.0	1.0	< 5.62	5.62		2	7/13/2018	75-69-4
Trichlorotrifluoroethane(F-113)	< 1.0	1.0	< 7.66	7.66		2	7/13/2018	76-13-1
Vinyl chloride	**24**	**1.0**	**61.2**	**2.56**		2	7/13/2018	75-01-4
Surr: 4-Bromofluorobenzene	93.2	70-130	%REC					

Airtech Environmental Laboratories (AEL) - AZ 0740

4620 E.Elwood St., Suite 13, Phoenix, AZ 85040 480-968-5888 Fax 480-966-1888

Client:	WOOD	**Client Sample ID:**	SP2-C1-062018
Project:	Cave Creek Landfill	**Project Number:**	14-2014-2034
Lab Order:	18F028	**Collection:**	6/20/2018
Lab ID:	03	**Matrix:**	Soil vapor

	ppbv		ug/M^3				Date	
Analyses	**Result**	**Limit**	**Result**	**Limit**	**Qual**	**DF**	**Analyzed**	**CAS#**
VOLATILE ORGANICS IN AIR	**TO-15**						Analyst: JJ	
1,1-Dichloroethane	< 200	200	< 810	810		400	7/13/2018	75-34-3
1,1-Dichloroethene	< 200	200	< 794	794		400	7/13/2018	75-35-4
1,2-Dichlorobenzene	< 200	200	< 1,200	1,200		400	7/13/2018	95-50-1
1,2-Dichloroethane	< 200	200	< 810	810		400	7/13/2018	107-06-2
2-Butanone (MEK)	< 2,000	2,000	< 5,900	5,900		400	7/13/2018	78-93-3
Acetone	< 2,000	2,000	< 4,760	4,760		400	7/13/2018	67-64-1
Benzene	< 200	200	< 638	638		400	7/13/2018	71-43-2
Chlorobenzene	< 200	200	< 920	920		400	7/13/2018	108-90-7
Chloroform	< 200	200	< 976	976		400	7/13/2018	67-66-3
cis-1,2-Dichloroethene	< 200	200	< 792	792		400	7/13/2018	156-59-2
Dichlorodifluoromethane(F-12)	**1,050**	**400**	**5,200**	**1,980**		400	7/13/2018	75-71-8
Ethylbenzene	< 200	200	< 868	868		400	7/13/2018	100-41-4
m&p-Xylene	< 400	400	< 1,740	1,740		400	7/13/2018	179601-23-1
Methylene chloride	**43,900**	**4,000**	**152,000**	**2,780**		2,000	7/13/2018	75-09-2
o-Xylene	< 200	200	< 868	868		400	7/13/2018	95-47-6
Tetrachloroethene	**4,110**	**400**	**27,870**	**2,712**		400	7/13/2018	127-18-4
Tetrahydrofuran	< 800	800	< 2,360	2,360		400	7/13/2018	109-99-9
Toluene	< 200	200	< 754	754		400	7/13/2018	108-88-3
trans-1,2-Dichloroethene	< 200	200	< 792	792		400	7/13/2018	156-60-5
Trichloroethene	< 200	200	< 1,070	1,070		400	7/13/2018	79-01-6
Trichlorofluoromethane(F-11)	< 200	200	< 1,120	1,120		400	7/13/2018	75-69-4
Trichlorotrifluoroethane(F-113)	< 200	200	< 1,530	1,530		400	7/13/2018	76-13-1
Vinyl chloride	**424**	**200**	**1,085**	**512**		400	7/13/2018	75-01-4
Surr: 4-Bromofluorobenzene	83.8	70-130	%REC					

Airtech Environmental Laboratories (AEL) - AZ 0740

4620 E.Elwood St., Suite 13, Phoenix, AZ 85040 480-968-5888 Fax 480-966-1888

Client:	WOOD	**Client Sample ID:**	SP1-SkidOutlet-062018
Project:	Cave Creek Landfill	**Project Number:**	14-2014-2034
Lab Order:	18F028	**Collection:**	6/20/2018
Lab ID:	04	**Matrix:**	Soil vapor

	ppbv		ug/M^3				Date	
Analyses	**Result**	**Limit**	**Result**	**Limit**	**Qual**	**DF**	**Analyzed**	**CAS#**
VOLATILE ORGANICS IN AIR	**TO-15**						Analyst: JJ	
1,1-Dichloroethane	< 1,000	1,000	< 4,050	4,050		2,000	7/14/2018	75-34-3
1,1-Dichloroethene	**26,600**	**1,000**	**106,000**	**3,970**		2,000	7/14/2018	75-35-4
1,2-Dichlorobenzene	< 1,000	1,000	< 6,010	6,010		2,000	7/14/2018	95-50-1
1,2-Dichloroethane	< 1,000	1,000	< 4,050	4,050		2,000	7/14/2018	107-06-2
2-Butanone (MEK)	< 10,000	10,000	< 29,500	29,500		2,000	7/14/2018	78-93-3
Acetone	< 10,000	10,000	< 23,800	23,800		2,000	7/14/2018	67-64-1
Benzene	< 1,000	1,000	< 3,190	3,190		2,000	7/14/2018	71-43-2
Chlorobenzene	< 1,000	1,000	< 4,600	4,600		2,000	7/14/2018	108-90-7
Chloroform	< 1,000	1,000	< 4,880	4,880		2,000	7/14/2018	67-66-3
cis-1,2-Dichloroethene	**5,340**	**1,000**	**21,100**	**3,960**		2,000	7/14/2018	156-59-2
Dichlorodifluoromethane(F-12)	< 2,000	2,000	< 9,900	9,900		2,000	7/14/2018	75-71-8
Ethylbenzene	< 1,000	1,000	< 4,340	4,340		2,000	7/14/2018	100-41-4
m&p-Xylene	< 2,000	2,000	< 8,680	8,680		2,000	7/14/2018	179601-23-1
Methylene chloride	**25,600**	**4,000**	**88,800**	**13,900**		2,000	7/14/2018	75-09-2
o-Xylene	< 1,000	1,000	< 4,340	4,340		2,000	7/14/2018	95-47-6
Tetrachloroethene	**8,840**	**2,000**	**59,900**	**13,600**		2,000	7/14/2018	127-18-4
Tetrahydrofuran	< 4,000	4,000	< 11,800	11,800		2,000	7/14/2018	109-99-9
Toluene	< 1,000	1,000	< 3,770	3,770		2,000	7/14/2018	108-88-3
trans-1,2-Dichloroethene	< 1,000	1,000	< 3,960	3,960		2,000	7/14/2018	156-60-5
Trichloroethene	**50,500**	**1,000**	**271,000**	**5,370**		2,000	7/14/2018	79-01-6
Trichlorofluoromethane(F-11)	< 1,000	1,000	< 5,620	5,620		2,000	7/14/2018	75-69-4
Trichlorotrifluoroethane(F-113)	**14,100**	**1,000**	**108,000**	**7,660**		2,000	7/14/2018	76-13-1
Vinyl chloride	< 1,000	1,000	< 2,560	2,560		2,000	7/14/2018	75-01-4
Surr: 4-Bromofluorobenzene	85.1	70-130	%REC					

Airtech Environmental Laboratories (AEL) - AZ 0740

4620 E.Elwood St., Suite 13, Phoenix, AZ 85040 480-968-5888 Fax 480-966-1888

Client:	WOOD	**Client Sample ID:**	N/A
Project:	Cave Creek Landfill	**Project Number:**	14-2014-2034
Lab Order:	18F028	**Collection:**	N/A
Lab ID:	Blank	**Matrix:**	Nitrogen

Method QC Data

Batch: MS010713 Analyst: JJ

Analyses	ppbv Result	ppbv Limit	ug/M^3 Result	ug/M^3 Limit	Qual	DF	Date Analyzed	CAS#
VOLATILE ORGANICS IN AIR		**TO-15**					Analyst: JJ	
1,1-Dichloroethane	< 0.5	0.5	< 2.03	2.03		1	7/13/2018	75-34-3
1,1-Dichloroethene	< 0.5	0.5	< 1.99	1.99		1	7/13/2018	75-35-4
1,2-Dichlorobenzene	< 0.5	0.5	< 3.01	3.01		1	7/13/2018	95-50-1
1,2-Dichloroethane	< 0.5	0.5	< 2.03	2.03		1	7/13/2018	107-06-2
2-Butanone (MEK)	< 5.0	5.0	< 14.8	14.8		1	7/13/2018	78-93-3
Acetone	< 5.0	5.0	< 11.9	11.9		1	7/13/2018	67-64-1
Benzene	< 0.5	0.5	< 1.60	1.60		1	7/13/2018	71-43-2
Chlorobenzene	< 0.5	0.5	< 2.30	2.30		1	7/13/2018	108-90-7
Chloroform	< 0.5	0.5	< 2.44	2.44		1	7/13/2018	67-66-3
cis-1,2-Dichloroethene	< 0.5	0.5	< 1.98	1.98		1	7/13/2018	156-59-2
Dichlorodifluoromethane(F-12)	< 1.0	1.0	< 4.95	4.95		1	7/13/2018	75-71-8
Ethylbenzene	< 0.5	0.5	< 2.17	2.17		1	7/13/2018	100-41-4
m&p-Xylene	< 1.0	1.0	< 4.34	4.34		1	7/13/2018	179601-23-1
Methylene chloride	< 2.0	2.0	< 6.94	6.94		1	7/13/2018	75-09-2
o-Xylene	< 0.5	0.5	< 2.17	2.17		1	7/13/2018	95-47-6
Tetrachloroethene	< 1.0	1.0	< 6.78	6.78		1	7/13/2018	127-18-4
Tetrahydrofuran	< 2.0	2.0	< 5.90	5.90		1	7/13/2018	109-99-9
Toluene	< 0.5	0.5	< 1.89	1.89		1	7/13/2018	108-88-3
trans-1,2-Dichloroethene	< 0.5	0.5	< 1.98	1.98		1	7/13/2018	156-60-5
Trichloroethene	< 0.5	0.5	< 2.69	2.69		1	7/13/2018	79-01-6
Trichlorofluoromethane(F-11)	< 0.5	0.5	< 2.81	2.81		1	7/13/2018	75-69-4
Trichlorotrifluoroethane(F-113)	< 0.5	0.5	< 3.83	3.83		1	7/13/2018	76-13-1
Vinyl chloride	< 0.5	0.5	< 1.28	1.28		1	7/13/2018	75-01-4
Surr: 4-Bromofluorobenzene	81.0	70-130	%REC					

Airtech Environmental Laboratories (AEL) - AZ 0740

4620 E.Elwood St., Suite 13, Phoenix, AZ 85040 480-968-5888 Fax 480-966-1888

Client:	WOOD	**Client Sample ID:**	N/A
Project:	Cave Creek Landfill	**Project Number:**	14-2014-2034
Lab Order:	18F028	**Collection:**	N/A
Lab ID:	LCS/LCSD	**Matrix:**	Nitrogen

Method QC Data

Date Analyzed: 7/13/2018 Batch: MS010713 Analyst: JJ

Analyses	LCS Result	LCS %REC	LCSD Result	LCSD %REC	T.V.	%RPD	Unit	Qualifier LCS	Qualifier LCSD	Qualifier RPD
VOLATILE ORGANICS IN AIR	**TO-15**							70-130%		<25%
Dichlorodifluoromethane(F-12)	9.4	93.7	9.8	97.8	10.0	4.3	ppbv			
Vinyl Chloride	7.9	78.9	8.0	79.5	10.0	0.8	ppbv			
Trichlorofluoromethane (F-11)	10.5	105	10.6	106	10.0	1.1	ppbv			
Acetone	8.4	83.8	9.0	89.6	10.0	6.7	ppbv			
1,1-Dichloroethene	8.4	83.8	8.9	89.0	10.0	6.0	ppbv			
Trichlorotrifluoroethane (F-113)	10.1	101	10.3	103	10.0	1.7	ppbv			
Methylene Chloride	7.9	79.0	8.6	86.0	10.0	8.5	ppbv			
trans-1,2-Dichloroethene	9.9	99.2	10.4	104	10.0	5.0	ppbv			
1,1-Dichloroethane	8.6	86.2	9.3	92.8	10.0	7.4	ppbv			
2-Butanone (MEK)	9.5	94.8	10.4	104	10.0	9.2	ppbv			
cis-1,2-Dichloroethene	10.1	101	10.6	106	10.0	4.2	ppbv			
Chloroform	9.6	95.5	10.1	101	10.0	6.0	ppbv			
Tetrahydrofuran	7.1	70.7	8.0	79.7	10.0	12.0	ppbv			
1,2-Dichloroethane	8.6	85.5	9.5	95.1	10.0	10.6	ppbv			
Benzene	9.8	97.5	10.4	104	10.0	6.3	ppbv			
Trichloroethene	11.5	115	11.8	118	10.0	3.0	ppbv			
Toluene	11.5	115	12.2	122	10.0	5.7	ppbv			
Tetrachloroethene	11.8	118	12.2	122	10.0	3.4	ppbv			
Chlorobenzene	11.4	114	12.0	120	10.0	4.5	ppbv			
Ethylbenzene	11.5	115	12.3	123	10.0	7.0	ppbv			
m&p-Xylene	23.2	116	24.6	123	20.0	5.9	ppbv			
o-Xylene	11.1	111	11.7	117	10.0	5.2	ppbv			
1,2-Dichlorobenzene	12.0	120	12.6	126	10.0	4.9	ppbv			
Surr: 4-Bromofluorobenzene	9.6	96.1	9.8	98.1			%REC			
		70-130%		70-130%						

Airtech Environmental Laboratories (AEL) - AZ 0740

4620 E.Elwood St., Suite 13, Phoenix, AZ 85040 480-968-5888 Fax 480-966-1888

Client:	WOOD	**Client Sample ID:**	NA
Project:	Cave Creek Landfill	**Project Number:**	14-2014-2034
Lab Order:	18F028	**Collection:**	NA
Lab ID:	Standards	**Matrix:**	Nitrogen

AEL ID#	STD Name	Vendor	SGI Order#	Description	CONC.	Accuracy	Exp.Date
S-170623-01	Stock	Spectra Gases	113123527	TO-14 39 Analytes	1.0 ppmv	5%	7/23/2018
S-170824-01	Stock	Spectra Gases	113123527	TO-15 25 Analytes	1.0 ppmv	5%	8/24/2018
S-170623-02	Stock	Spectra Gases	113123527	15 Additional Compounds	1.0 ppmv	5%	7/23/2018
S-171019-01	Stock	Spectra Gases	114560630	TO-15 IS 4 Compounds	1.0 ppmv	5%	10/19/2018
A-180612-01	Working Std	AEL Dilution		TO-15 74 Analytes	20 ppbv	5%	7/23/2018
A-180612-02	Working IS	AEL Dilution		TO-15 IS 4 Compounds	50 ppbv	5%	10/3/2018
A-180703-01	Working IS	AEL Dilution		TO-15 IS 4 Compounds	50 ppbv	5%	10/3/2018

Airtech Environmental Laboratories (AEL)

Chain of Custody

4620 E.Elwood Street, Suite 13, Phoenix, AZ 85040 480-968-5888 (phone) 480-966-1888 (fax)

Customer :	Amec Foster Wheeler	Page 1 of 1	AEL Lab #
Address:	4600 East Washington Street, Suite #600	Sampler: Eric Miller Phone: (602) 300-8313	18F028
		Project Name: Cave Creek Landfill Project Number: 14-2014-2020	
City, State, Zip:	Phoenix, AZ 85034	Project location: Cave Creek, AZ	
Contact:	~~Alex Yiannakakis~~ NATALIE CHRISMAN	P.O. Number:	
Phone:	(602) 733-6000 Fax: (602) 733-6100	Fax Results: Y N	
E-Mail Address:	~~alex.yiannakakis~~@amec.com	E-Mail Results: Y N	

Sample Receipt	Turn Around Request	Sample Type
Temperature_____ °C	____ 24 Hours ____ 48 Hours	SVE: soil vapor extraction GW: ground water
Custody Seals: Yes_____ No_____	____ 72 Hours	A: ambient air WW: waste water
Custody Seals Intact: Yes_____ No_____	____ 5 working Day	I: indoor air
Total # of Containers:_____	✓ Standard 10 Working Days	S: soil vapor
		W: water

Sample Information

AEL Lab #	Serial # Canister	Serial # Grab	Canister (L) or bag	Grab (Min)	Client's Sample Identification	Sampled Date	Sampled Time	Sample Type	Number of Containers	TO-15 full list	TO-15 TPH(GRO)	TO-15 Selet List	8260B AZ Vapor full list	8260B Vapor select list	8015 GRO	8260B Water			DFA tracer cmpd. as TIC
01	E2404	014	6 1 bag	1 2 5	SP4-H1-062018	6.20.18	710	SVE	1			✓							
02	E2294	074	6 1 bag	1 2 5	SP3-C3-062018	↓	715	↓	↓			✓							
03	E2394	150	6 1 bag	1 2 5	SP2-C1-062018	↓	720	↓	↓			✓							
04	E2296	071	6 1 bag	1 2 5	SP1-SKIDOUTLET-062018	↓	725	↓	↓			✓							
			6 1 bag	1 2 5															
			6 1 bag	1 2 5															
			6 1 bag	1 2 5															
			6 1 bag	1 2 5															
			6 1 bag	1 2 5															
			6 1 bag	1 2 5															

Instructions / Special Requirements:

Date:	Time:	Samples Relinquished By:	Received By:
6.20.18	1407	E. Miller	James Jaus - Airtech

EXHIBIT 1

CAVE CREEK LANDFILL PROGRESS SCHEDULE

ID		Task Mode	Task Name	Duration	Start	Finish
4			SVE Operations	1306 day	Tue 9/15/15	Tue 9/15/20
5			SVE Work Plan	817 days	Tue 9/15/15	Wed 10/31/1
6			SVE Operations Termination Pla	0 days	Wed 6/24/20	Wed 6/24/20
12	✓		Maricopa County Planning and Development Department	4.65 mons	Thu 10/5/17	Mon 2/12/18
13	✓		APS Design of GWTS Phase 1	93 days	Tue 3/13/18	Thu 7/19/18
14			Procurement/GWTS Phase 1 Construction (feasible and appropriate components only)	11.9 mons	Fri 6/1/18	Tue 4/30/19
15			GWTS Phase 1 Construction Completion Memorandum	2 mons	Wed 5/1/19	Tue 6/25/19
17	✓		City of Phoenix Property Procurement for Injection Well	15.1 mons	Thu 10/6/16	Fri 12/1/17
19	✓		GWTS Phase 2 (100% Design Drawings)	6.6 mons	Thu 1/11/18	Fri 7/13/18
20	✓		ADEQ/COP WS Review and Approval of GWTS Phase 2 (100% Design Drawings)	1 mon	Mon 7/16/18	Fri 8/10/18
21			COP PD Review and Approval of Phase 2 (100% Design	1.5 mons	Mon 9/24/18	Fri 11/2/18
22			GWTS Phase 2 Procurement/Construction	4 mons	Mon 11/5/18	Fri 2/22/19
26	✓		Injection Well Design/COP WS Approval/Procurement	140 days	Mon 12/4/17	Fri 6/15/18
27			Injection Well Drilling, Installation and Testing	100 days	Mon 1/7/19	Fri 5/24/19
28			Groundwater Injection Well Installation Report	3 mons	Mon 5/27/19	Fri 8/16/19
29			GWTS Phase 3 (100% Design Drawings)	3 mons	Mon 5/27/19	Fri 8/16/19
30			ADEQ/COP WS Review and Approval of GWTS Phase 3 (100% Design Drawings)	1 mon	Mon 8/19/19	Fri 9/13/19
31			COP PD Review and Approval of Phase 3 (100% Design	1 mon	Mon 9/16/19	Fri 10/11/19
33			GWTS Phase 3 Procurement/Construction (Well Site)	2 mons	Mon 10/14/19	Fri 12/6/19
34			GWTS As-Built Drawings Submi	2 mons	Mon 12/9/19	Fri 1/31/20
35			GWTS Operations Plan	1 mon	Mon 12/9/19	Fri 1/3/20
36	✓		Downgradient Monitoring Well Access Negotiations	439 days	Fri 10/7/16	Wed 6/13/18
37			2018 Monitoring Well Installation Program	3.25 mons	Mon 8/6/18	Fri 11/2/18
41			2018 Monitoring Well Installation Report	2 mons	Mon 11/5/18	Fri 12/28/18
42			Groundwater Characterization Work Plan for Old Landfill	3.5 mons	Mon 12/31/18	Fri 4/5/19
43			Groundwater Model Update	6 mons	Mon 8/19/19	Fri 1/31/20
44			**1st Quarter Progress Report**	**782 days**	**Thu 6/15/17**	**Mon 6/15/20**
50			**2nd Quarter Progess Report**	**782 days**	**Fri 9/15/17**	**Tue 9/15/20**
55			**3rd Quarter Progress Report**	**782 days**	**Thu 12/15/1**	**Sun 12/15/19**
60			**4th Quarter Progess Report**	**783 days**	**Wed 3/15/17**	**Sun 3/15/20**

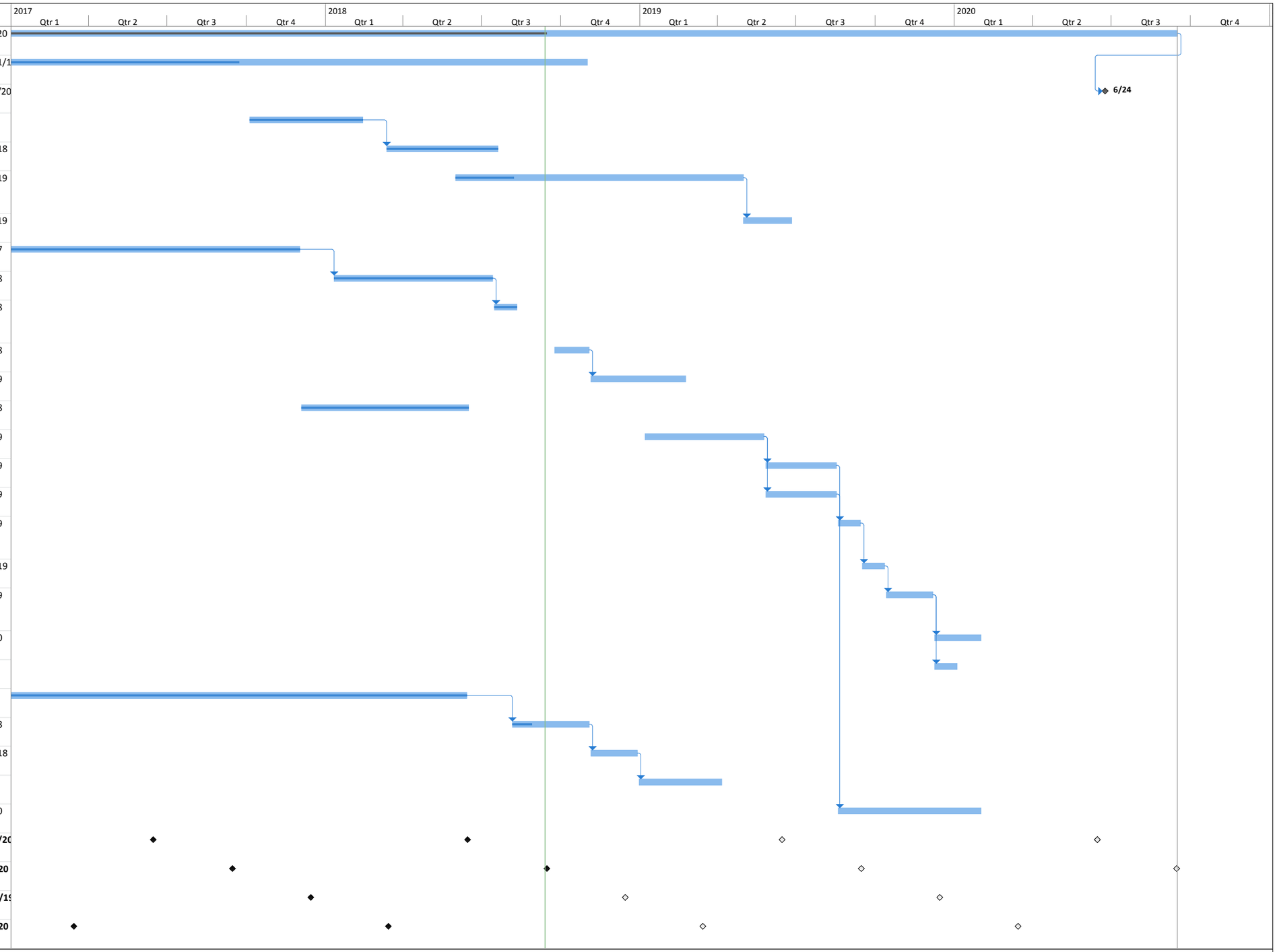

EXHIBIT 1
Project: CCL Progress Schedule
Date: Thu 9/13/18

Task | Split | Milestone | Summary | Project Summary | External Tasks | External Milestone | Inactive Task | Inactive Milestone | Inactive Summary | Manual Task | Duration-only | Manual Summary Rollup | Manual Summary | Start-only | Finish-only | Deadline | Progress | Manual Progress

ID	Task Mode	Task Name	Duration	Start	Finish
1		GWTS Operations Plan	1 mon	Mon 12/9/19	Fri 1/3/20
2		ADEQ Review and Approval of GWTS Operations Plan	1 mon	Mon 1/6/20	Fri 1/31/20
3		Groundwater Treatment Operations	7045 days	Mon 2/3/20	Fri 2/1/47
4		Groundwater Modeling Upda	3 mons	Mon 12/6/21	Fri 2/25/22
5		On-Site ISCO Treatment Work Plan (if deemed	3 mons	Mon 2/28/22	Fri 5/20/22
6		Groundwater Extraction Termination Plan	3 mons	Thu 1/25/46	Wed 4/18/46
7		**1st Quarter Progress Report**	**6523 days**	**Tue 6/15/21**	**Thu 6/14/46**
37		**2nd Quarter Progress Report**	**6524 days**	**Wed 9/15/21**	**Sat 9/15/46**
67		**3rd Quarter Progress Report**	**6785 days**	**Tue 12/15/20**	**Sat 12/15/46**
98		**4th Quarter Progress Report**	**6731 days**	**Mon 3/15/21**	**Mon 12/31/4**

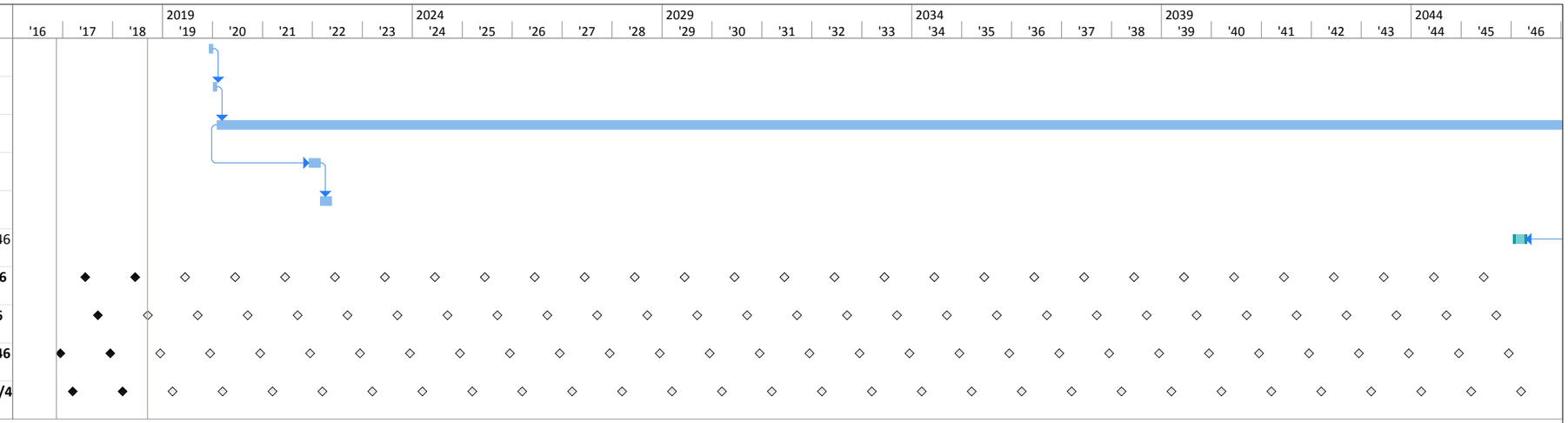

EXHIBIT 1
Project: CCL Progress Schedule
Date: Thu 9/13/18

Task | Split | Milestone | Summary | Project Summary | External Tasks | External Milestone | Inactive Task | Inactive Milestone | Inactive Summary | Manual Task | Duration-only | Manual Summary Rollup | Manual Summary | Start-only | Finish-only | Deadline | Progress | Manual Progress