MARICOPA COUNTY

DEPARTMENT OF TRANSPORTATION

SUPPLEMENT TO THE

MARICOPA ASSOCIATION OF GOVERNMENTS'

UNIFORM STANDARD SPECIFICATIONS

AND DETAILS FOR

PUBLIC WORKS CONSTRUCTION

January 2020

TABLE OF CONTENTS

Authorization Memorandum vii
Summary of Changes for the 2020 MCDOT Supplement to MAG viii

SECTION 101 ABBREVIATIONS AND DEFINITIONS 1
SECTION 102 BIDDING REQUIREMENTS AND CONDITIONS 1
SECTION 103 AWARD AND EXECUTION OF CONTRACT 3
SECTION 104 SCOPE OF WORK 3
SECTION 105 CONTROL OF WORK 6
SECTION 106 CONTROL OF MATERIALS 9
SECTION 107 LEGAL REGULATIONS AND RESPONSIBILITY TO PUBLIC 11
SECTION 108 COMMENCEMENT, PROSECUTION AND PROGRESS 20
SECTION 109 MEASUREMENTS AND PAYMENTS 24
SECTION 111 ENGINEER'S OFFICE FACILITIES 25
SECTION 202 REMOVAL OF STRUCTURES 30
SECTION 205 ROADWAY EXCAVATION 33
SECTION 206 STRUCTURE EXCAVATION AND BACKFILL 34
SECTION 210 BORROW EXCAVATION 34
SECTION 211 FILL CONSTRUCTION 35
SECTION 212 ROADWAY OBLITERATION 35
SECTION 213 DEWATERING 36
SECTION 215 EARTHWORK FOR OPEN CHANNELS 37
SECTION 216 EARTHWORK ADJUSTMENTS 37
SECTION 222 CEMENT STABILIZED ALLUVIUM BANK PROTECTION 38
SECTION 310 PLACEMENT AND CONSTRUCTION OF AGGREGATE BASE COURSE 47
SECTION 317 ASPHALT MILLING 48
SECTION 321 PLACEMENT AND CONSTRUCTION OF ASPHALT CONCRETE PAVEMENT 48
SECTION 325 PLACEMENT AND CONSTRUCTION OF ASPHALT-RUBBER ASPHALT CONCRETE 49
SECTION 327 HOT IN PLACE RECYCLING 51
SECTION 329 TACK COAT 51
SECTION 333 FOG SEAL COATS 51
SECTION 336 PAVEMENT MATCHING AND SURFACE REPLACEMENT 52
SECTION 337 CRACK SEALING 53
SECTION 340 CONCRETE CURB, GUTTER, SIDEWALK, SIDEWALK RAMPS, DRIVEWAY AND ALLEY ENTRANCE 58
SECTION 350 REMOVAL OF EXISTING IMPROVEMENTS 58
SECTION 351 RELOCATION AND ADJUSTMENT OF EXISTING IMPROVEMENTS 59
SECTION 401 TRAFFIC CONTROL 61
SECTION 405 SURVEY MONUMENTS 67
SECTION 416 GUARDRAIL END TREATMENTS 68
SECTION 417 CRASH CUSHIONS 70
SECTION 430 LANDSCAPING AND PLANTING 71
SECTION 432 GRAVEL MULCH 75
SECTION 460 REMOVAL OF PAVEMENT MARKINGS AND RAISED PAVEMENT MARKERS 76
SECTION 461 PAINTED PAVEMENT MARKINGS 80
SECTION 462 THERMOPLASTIC AND PREFORMED PAVEMENT MARKINGS 93
SECTION 463 RAISED PAVEMENT MARKERS 107
SECTION 464 ROADSIDE SIGN SUPPORTS 111
SECTION 465 SIGN PANELS 114

TABLE OF CONTENTS

SECTION 470 GENERAL REQUIREMENTS FOR TRAFFIC SIGNAL AND INTERSECTION LIGHTING SYSTEMS 119
SECTION 471 ELECTRICAL UNDERGROUND INSTALLATION 124
SECTION 472 TRAFFIC SIGNAL FOUNDATIONS 128
SECTION 473 DETECTORS 131
SECTION 474 TRAFFIC SIGNAL POLE INSTALLATION 137
SECTION 475 ELECTRICAL POWER SERVICE AND CONTROLLER CABINET INSTALLATION 141
SECTION 476 SIGNAL INDICATIONS AND MOUNTINGS 143
SECTION 477 INTERSECTION LIGHTING 148
SECTION 478 ELECTRICAL CONDUCTORS 151
SECTION 480 INTELLIGENT TRANSPORTATION SYSTEM GENERAL REQUIREMENTS 155
SECTION 481 FIBER OPTIC CONDUIT AND PULL BOXES: 167
SECTION 482 FIBER OPTIC CABLE AND EQUIPMENT: 178
SECTION 483 CLOSED CIRCUIT TELEVISION 192
SECTION 484 DYNAMIC MESSAGE SIGNS 196
SECTION 486 COMMUNICATIONS EQUIPMENT 198
SECTION 502 DRILLED SHAFT FOUNDATIONS 218
SECTION 505 CONCRETE STRUCTURES 231
SECTION 506 PRECAST PRESTRESSED CONCRETE MEMBERS 232
SECTION 508 CATTLE GUARD 236
SECTION 601 TRENCH EXCAVATION, BACKFILLING AND COMPACTION 237
SECTION 635 CONCRETE LINED IRRIGATION DITCH 238
SECTION 702 BASE MATERIALS 239
SECTION 710 ASPHALT CONCRETE 239
SECTION 717 ASPHALT-RUBBER ASPHALT CONCRETE 241
SECTION 718 PRESERVATIVE SEAL FOR ASPHALT CONCRETE 242
SECTION 725 PORTLAND CEMENT CONCRETE 243
SECTION 728 CONTROLLED LOW STRENGTH MATERIAL 243
SECTION 738 HIGH DENSITY POLYETHYLENE PIPE & FITTINGS FOR STORM DRAIN & SANITARY SEWER 243
SECTION 740 POLYPROPYLENE PIPE & FITTINGS FOR STORM DRAIN, IRRIGATION & SANITARY SEWER 244
SECTION 771 GALVANIZING 244

TABLE OF CONTENTS

Maricopa County Standard Details

Restricted MAG Details – Not for general use in MCDOT Right-of-Way.

225 INTERLOCKING CONCRETE PAVERS – Concrete pavers are not allowed within roadway pavement areas subject to vehicle traffic. They may be used for driveways or within raised medians.

236-5 25'-35' R - RADIAL PARALLEL CURB RAMP – Not allowed except for retrofit purposes; use requires special approval from MCDOT.

237-1, 237-2, and 237-3 DIRECTIONAL CURB RAMP (various radii) – Use MCDOT Radial curb ramp details.

238-3 PARALLEL CURB RAMP – Parallel Curb Ramps are not allowed except for retrofit purposes, use requires special approval from MCDOT.

250-1 &250-1 – DRIVEWAY ENTRANCES Use MCDOT Details 2050-1 & 2050-2

251 RETURN TYPE DRIVEWAYS – Use MCDOT Details 2036-1 and 2036-2. Use is limited to industrial and commercial driveways, not to be used for residential driveways.

501-1 & 501-2 HEADWALL - Not allowed; use requires special approval from MCDOT

533 CATCH BASIN TYPE D

Number	Description
2010-1	Residential Speed Hump Without Curb and Gutter
2010-2	Residential Speed Hump With Curb and Gutter
2010-3	Speed Hump Extension
2011	Residential Speed Cushion without Curb and Gutter
2013	Milling for Overlay
2014-1	Milling for Overlay Without Curb Type I Termination
2014-2	Milling for Overlay Without Curb Type II Termination
2014-3	Milling for Overlay Without Curb Type III Termination
2022	Retrofit 20' Return w/Dual Combination Curb Ramps
2023	Retrofit 20'-25' Return w/ Single Combination Curb Ramp
2024	DELETED – Replace with MAG Detail 238-4
2030-A	Sidewalk Ramp Retrofit – Method A
2031	Radial Curb Ramps for 30' & 35' Curb Returns (2 pages)
2032	Radial Curb Ramps for Residential Intersections
2033	Single Radial Curb Ramp at Sidewalk Transition
2036-1	Return Type Driveways with Detached Sidewalk
2036-2	Return Type Driveways with Attached Sidewalk
2050-1	Driveway Entrances with Detached Sidewalk
2050-2	Driveway Entrances with Attached Sidewalk
2054	Street Name Sign Layout and Installation Details (4 pages)
2055	Barricade (Portable)
2057	Permanent Road Closure Using Type III Barricades (4 pages)
2058	Square Perforated Tube Sign Post Foundation & Splice Details

TABLE OF CONTENTS

Number	Description
2059	U-Channel Post Selection and Installation Details
2060	Offsets, Clearances and Mounting Details for Signs on County Roadways (2 pages)
2061	Sign Blanks – Layouts (23 pages)
2062	Street Sign – Post Caps and Brackets (6 pages)
2066	Mailbox Installation
2067	Mailbox Installation Hardware
2069	Recommended Mailbox Clearances at Intersections
2070	Typical Mailbox Turnout
2801	W-Beam Guard Rail G4(1W) and G4 (2W) Blocked Out Timber Post
2802	28” High Strong Post W-Beam Guardrail Installation
2803	W-Beam Guardrail G4 (1S) Blocked Out Steel Post
2805	Guardrail: Tangent W-Beam Terminal Layout with Curb and Gutter
2806	Guardrail: Tangent W-Beam Terminal Layout without Curb and Gutter
2807	Departure End Terminal
2808-1	Nested Guardrail Type 1
2808-2	Nested Guardrail Type 2
2808-3	Nested Guardrail Type 3
2812-1	Thrie Beam Guardrail Transition
2812-2	Bridge Barrier Transition
2812-3	Barrier Details
2816	28” High Strong Post W-Beam Guardrail Measurement
3004	Guardrail Post Installation for Concrete Paved Areas
3009	Guardrail Transition 31” to 28”
3010	Bolted Guardrail Anchors (2 pages)
3016	DELETED Guardrail Measurement – REVISED TO Detail 2816 & 3116
3100	Wood BCT & CRT Posts, Foundation Tube
3101	Midwest Guardrail System Blocked out Timber Post
3102	MGS Guardrail Installation
3103	MGS Blocked Out Steel Post
3105	MGS Tangential Terminal Layout with Curb & Gutter
3106	MGS Tangent W-Beam Terminal Layout without Curb & Gutter
3107	MGS Guardrail – End Terminal Layout
3108	MGS Long-Span
3116	31” Midwest Guardrail System (MSG) Guardrail Measurement
4701	Traffic Signal Symbols (2 pages)
4711	Traffic Signal Pull Box Detail
4712	Traffic Signal Pull Box Extension
4713	Typical Traffic Signal Pull Box Installation
4716	Typical Traffic Signal Pull Box and Conduit Run Layout
4717	ITS Interconnect Conduit and Pull Box Layout
4720	Signal Pole Foundation (Pole Types A, E, F & PB)
4721	Signal Pole Foundations (Pole Types J, Q, K & R)
4723	'P' Cabinet Foundation
4724	Combination Service Pedestal and Battery Backup Foundation Detail

TABLE OF CONTENTS

Number	Description
4725	Anchor Bolt with Hook
4726	Anchor Bolt with Plate
4730-1	P - 44 Cabinet
4730-2	R – 77 Cabinet
4731-1	'SP' Electrical Service Pedestal & 'BBS' Battery Backup System Cabinet
4731-2	Service Pedestal and Battery Backup Wiring Schematic
4735	Controller Cabinet Wiring Schematic
4737	Luminaire Circuit
4738	Type 'A' Pole
4739-1	Pole Lower Hand Hole Details
4739-2	Pole Upper Hand Hole Detail
4740	Type 'E' Pole
4741-1	Type 'F' Pole
4741-2	'E' & 'F' Pole Details
4742	Type 'J' Pole
4743	Type 'Q' Pole
4744	'J' & 'Q' Pole Details
4748	Type 'K' Pole
4749-1	Type 'R' Pole
4749-2	'K' & 'R' Pole Details
4750	Type 'PB' Pole
4755	Video Detection Camera Installation
4757	Loop Installation Details
4758	Conduit Stub-Out Detail Without Curb & Gutter
4759	Conduit Stub-Out Detail With Curb & Gutter
4773	Standard Signal Faces
4774	Signal Head Visor
4775	Side Mount (Type XI) Assembly (Vehicle & Pedestrian)
4778-1	Mast Arm Signal Head Mount (Type II)
4778-2	Elevator Plumbizer Detail
4780-1	Metro Street Sign Layout Sheet Installation on Signal Poles
4780-2	Metro Street Sign Layout and Installation on Traffic Signal Poles
4780-3	DELETED Metro Street Sign Clamp – See MCDOT Approved Materials List
4780-4	Metro Street Name Sign Mounted on Type "J" or "K" Signal Poles
4780-5	DELETED Oversized Metro Street Name Sign Mounting to Signal Pole Details
4785	Pole Plate
4788	Elbow
4789	Tee
4791	Ornamental Cap
4792	DELETED - Side Mounted Terminal Compartment
4793	DELETED - Terminal Compartment Cover
4794	DELETED - Type V Mounting Assembly
4795	DELETED - Type VII Mounting Assembly

TABLE OF CONTENTS

Number	Description
4797-1	Type PB Pedestrian Push-Button Mount
4797-2	Pedestrian Push-Button Housing
4797-3	Pedestrian Push-Button Adapter Plate
4797-4	Audible Pedestrian Push Button Station
4798	Underground Combination Power Service / Battery Backup System Layout
4799-1	Color Code - 2, 4 and 7 Conductor Cable
4799-2	Color Code - 20 Conductor Cable
4801	Typical ITS PVC Conduit Installation
4805-1	ITS Fiber Optic Pull Box Type A
4805-2	ITS Fiber Optic Pull Box Type B
4805-3	ITS Fiber Optic Pull Box Type C
4805-4	ITS Fiber Optic Pull Box Type D
4806-1	ITS Fiber Optic Pull Box Type E
4806-2	ITS Fiber Optic Type E Pull Box Cover Assembly
4810	ITS Conduit and ITS Type A Pull Box Installation
4811	ITS Conduit and Type B, C, D & E Pull Box Installation
4821	Fiber Optic Cable Installed in Type B, C, D & E Pull Box
4825-1	ITS Pedestal Post Top Mounting (G-1)
4825-2	ITS Square Base (‘SB’) Pole Foundation Detail
4825-3	ITS Square Base ‘SB’ Pedestal
4825-4	ITS Type ‘SB’ Pole
4825-5	ITS Pedestal Pole Top Mounting Adapter
4825-6	ITS Type ‘G’ Cabinet
4827	ITS Post Side Mount (G-2)
4829-1	Service Pedestal
4829-2	Service Pedestal Foundation
4829-3	Service Pedestal Wiring Schematic
4830	CCTV Camera Installation on Signal Pole
4831-1	ITS CCTV Camera Panel Location
4831-2	ITS CCTV Camera Panel Details
4831-3	CCTV Camera Wiring Schematic
4833	Multiservice Radio Installation on Signal Pole
4835	4”X4” Post with Conduit for T1 Demarcation Point
5524-1	Headwall
5524-2	Headwall (Multi Pipe)
5560-1	Channel Lining
5560-2	Channel Lining (Details)

Maricopa County
Department of Transportation

Director's Office
2901 W. Durango Street
Phoenix, AZ 85009
Phone: 602-506-4700
Fax: 602-506-4858
www.mcdot.maricopa.gov

DATE: December 19, 2019

TO: Engineers, Contractors, Consultants and Agency Staff

FROM: Jennifer Toth, P.E.
County Engineer
Transportation Director

SUBJECT: Maricopa County Department of Transportation Supplement to the MAG Uniform Standard Specifications and Details for Public Works Construction

Effective January 6, 2020, work performed within Maricopa County rights-of-way shall comply with the 2020 Edition of the MAG Uniform Standard Specifications and Details for Public Works Construction as modified by the Maricopa County Department of Transportation (MCDOT) Supplement dated January 2020. The attached supplement dated January 2020 replaces the MCDOT Supplement dated January 2019 and shall remain in effect until reissued or updated.

Please address specific issues or concerns to the MCDOT Engineering Division:

Karl Rockwell (602) 506-4856 (email: KarlRockwell@mail.maricopa.gov)
Steve Wilcox (602) 506-2400 (email: SteveWilcox@mail.maricopa.gov)

This document is also available on the MCDOT website at: http://www.mcdot.maricopa.gov/technical/ or for purchase at the Maricopa County Department of Transportation offices located at 2901 West Durango Street, Phoenix, AZ 85009, Customer Service (602) 506-8600.

Enclosure

Summary of Changes for the 2020 MCDOT Supplement to MAG

Below is a summary of proposed changes for the 2020 MCDOT Supplement to MAG. The changes have been coordinated with the 2020 Edition Uniform Standard Specifications and Details for Public Works Construction, Maricopa Association of Governments.

Specification Changes

SECTION 103 AWARD AND EXECUTION OF CONTRACT
103.6.1 GENERAL Added that these are minimum coverages and other coverages may be required.
SECTION 107 LEGAL REGULATIONS AND RESPONSIBILITY TO THE PUBLIC
107.1 COMMUNITY RELATIONS SUPPORT – Revised Paragraphs 1 thru 6.
107.2 PERMITS
107.2.3 MUNICIPAL SEPARATE STORM SEWER SYSTEM (MS4) REQUIREMENTS
205.8 PAYMENT – Payment per bidding schedule. Adjustments per Section 216.
SECTION 206 STRUCTURE EXCAVATION AND BACKFILL
206.5.1 MEASUREMENT – Quantities per bidding schedule. Adjustments per Section 216.
206.5.2 PAYMENT – Payment provision for unsuitable material per Section 109.5.
SECTION 210 BORROW EXCAVATION
210.4 MEASUREMENT – Quantities per bidding schedule. Adjustments per Section 216.
210.5 PAYMENT – Payment per bidding schedule. Adjustments per Section 216.
SECTION 211 FILL CONSTRUCTION
211.5 MEASUREMENT – Not measured.
211.6 PAYMENT – Payment included in other pay items.
SECTION 215 EARTHWORK FOR OPEN CHANNELS
215.7 MEASUREMENT – Quantities per bidding schedule. Adjustments per Section 216.
206.5.2 PAYMENT – Payment provision for unsuitable material per Section 109.5.
SECTION 210 BORROW EXCAVATION
210.4 MEASUREMENT – Quantities per bidding schedule. Adjustments per Section 216.
210.5 PAYMENT – Payment per bidding schedule. Adjustments per Section 216.
SECTION 211 FILL CONSTRUCTION
211.5 MEASUREMENT – Not measured.
211.6 PAYMENT – Payment included in other pay items.
SECTION 215 EARTHWORK FOR OPEN CHANNELS
215.7 MEASUREMENT – Quantities per bidding schedule. Adjustments per Section 216.

215.8 PAYMENT – Payment provision for unsuitable material per Section 109.5.
SECTION 216 EARTHWORK ADJUSTMENT – New Section. This section allows for earthwork measurement and payment adjustments in excess of +/- 5% of the bid schedule quantity.
SECTION 327 HOT IN PLACE RECYCLING
327.3 Equipment: Add additional requirements to the Heating Unit:
Section 401 TRAFFIC CONTROL
401.2.4 Pavement Markings: Added Temporary Striping requirements and payment provisions.
SECTION 417 CRASH CUSHIONS - Update to include MASH compliance.
SECTION 462 THERMOPLASTIC AND PREFORMED PAVEMENT MARKINGS
462.3.2 Material Curing Prior to Application of Markings (30 days for microsurfacing, slurry, and surface treatments)
SECTION 505 CONCRETE STRUCTURES
505.1 DESCRIPTION, add the following;
505.1.2 Precast Concrete Structures – Plant Certification requirement.
505.1.3 Retaining Walls – Clarify Class of concrete and other treatments.
505.11 MEASUREMENT, add the following:
505.11.5 Retaining Walls – Measure Sq. Ft. of wall face.
505.12 PAYMENT, add the following:
505.12.4 Retaining Walls – Paid for by Sq. Ft. of wall face.
SECTION 718 – PERSERVATIVE SEAL FOR ASPHALT CONCRETE – New Section for Type 5 Preservative Seal. Type 5 was removed from MAG Specifications in 2019.

Details – Revised, New, or Deleted

MCDOT Details – Revised
2036-1 RETURN TYPE DRIVEWAYS WITH DETACHED SIDEWALK
2036-2 RETURN TYPE DRIVEWAYS WITH ATTACHED SIDEWALK
2801 W-BEAM GUARDRAIL G4(1W) AND G4 (2W) BLOCKED OUT TIMBER POST
3102 MIDWEST GUARDRAIL SYSTEM (MGS) GUARDRAIL INSTALLATION
3103 MIDWEST GUADRAIL SYSTEM BLOCKED OUT STEEL POST

MCDOT Details – New
2050-1 DRIVEWAY ENTRANCES WITH DETACHED SIDEWALK
2050-1 DRIVEWAY ENTRANCES WITH ATTACHED SIDEWALK
4730-1 P – 44 CABINET
4730-2 R – 77 CABINET
5560-1 CHANNEL LINING
5560-2 CHANNEL LINING (DETAILS)

MCDOT Details – Deleted
2024 SINGLE CURB RAMP MID-BLOCK RESIDENTIAL STREET W/ 4” ROLL CURB

(Use MAG Detail 238-4 SINGLE CURB RAMP MID-BLOCK RESIDENTIAL STREET W/ 4" ROLL CURB 01-01-2020)
2036 RETURN TYPE DRIVEWAYS WITH ATTACHED SIDEWALK
4723 'P' CABINET See Detail 4730-1
4780-3 METRO STREET SIGN CLAMP – See MCDOT APPROVED MATERIAL LIST
4792 SIDE MOUNTED TERMINAL COMPARTMENT
4793 TERMINAL COVER
4794 TYPE V MOUNTING ASSEMBLY
4795 TYPE VII MOUNTING ASSEMBLY

. **Restricted MAG Detail – Not For Use in MCDOT Right-of-Way**
250-1 & 250-2 DRIVEWAY ENTRANCES – USE MCDOT DETAILS 2050-1 & 2050-2
533 CATCH BASIN TYPE 'D

The following are proposed changes to the 2020 Edition - Uniform Standard Specifications and Details for Public Works Construction. None of the changes proposed have a direct impact to the MCDOT Supplement to MAG Specifications and Details. The changes can be viewed at http://www.azmag.gov/Event/20229

2020 Edition - Maricopa Association of Governments Uniform Standard Specifications and Details for Public Works Construction - 2020 DRAFT REVISIONS

New Specifications:

- Section 627: Painting Sanitary Sewer Manholes with Insecticide
- Section 744: Precast Polymer Concrete Manhole

Specifications rewritten, or with major updates:

- Section 331: Placement and Construction of Asphalt Emulsion Micro-Surfacing Treatments
- Section 332: Placement and Construction of Asphalt Emulsion Slurry Seal Treatments
- Section 713: Emulsified Asphalts Materials
- Section 714: Microsurfacing Materials
- Section 715: Slurry Seal Materials

Specifications with minor updates:

- Section 206: Structure Excavation and Backfill
- Section 321: Placement and Construction of Asphalt Concrete Pavement
- Section 525: Pneumatically Placed Mortar
- Section 618: Storm Drain Construction
- Section 625: Manhole Construction and Drop Sewer Connections
- Section 631: Water Taps and Meter Service Connections
- Section 719: Polymer Modified Asphalt Concrete

Other updates:

Updated Table of Contents, Index, and Hyperlinks

New detail drawings:

- Detail 238-4: SINGLE CURB RAMP MID-BLOCK RESIDENTIAL STREET W/4" ROLL CURB
- Detail 419-1: POLYMER CONCRETE SANITARY SEWER MANHOLE
- Detail 419-2: PRE-CAST POLYMER CONCRETE MANHOLE BASE
- Detail 419-3: POLYMER CONCRETE MANHOLE BASE

MAG Details that have been updated:

- Detail 100-1: INDEX (PAGE 1 OF 2)
- Detail 100-2: INDEX (PAGE 2 OF 2)
- Detail 145: SAFETY RAIL

- Detail 200-1: TRENCH BACKFILL AND SURFACE REPLACEMENT
- Detail 200-2: TRENCH BACKFILL AND SURFACE REPLACEMENT
- Detail 262: WING TYPE ALLEY ENTRANCE (W/ COMBINED CURB & GUTTER)
- Detail 404-1: WATER AND SANITARY SEWER SEPARATION/PROTECTION
- Detail 404-3: WATER AND SANITARY SEWER SEPARATION/PROTECTION
- Detail 423-1: 24" CAST IRON MANHOLE FRAME AND COVER
- Detail 423-2: 30" CAST IRON MANHOLE FRAME AND COVER
- Detail 424-1: 24" CAST IRON WATERTIGHT MANHOLE FRAME AND COVER
- Detail 424-2: 30" CAST IRON WATERTIGHT MANHOLE FRAME AND COVER
- Detail 501-1: HEADWALL
- Detail 501-2: HEADWALL
- Detail 501-3: HEADWALL 42" TO 84" PIPE
- Detail 501-4: HEADWALL IRRIGATION 18" TO 60" PIPE
- Detail 501-5: HEADWALL DROP INLET
- Detail 502-1: TRASH RACK

MCDOT 2020
Supplement to MAG Uniform Standard Specifications

SECTION 101

ABBREVIATIONS AND DEFINITIONS

101.2 DEFINITIONS AND TERMS:

Add the following:

Certified Laboratory: An AASHTO accredited laboratory, certified in the relevant engineering materials and testing specialty areas(s) referenced in the Contract Documents.

County: The Maricopa County Department of Transportation, acting through its legally constituted officials, officers, or designated employees.

Mailbox: The mail receptacle and its supporting post or structure.

Maximum Density: The maximum dry density of soil obtained from the procedures defined in Section 301.3.

Portland Cement Concrete Pavement: Concrete pavement that complies with specification section 324.

Professional Geologist: A person who has a current registration as a geologist granted by the Arizona State Board of Technical Registration.

The following definition is revised:

Force Account Work: Work performed in accordance with Section 109.5

SECTION 102

BIDDING REQUIREMENTS AND CONDITIONS

102.2 CONTENTS OF PROPOSAL PAMPHLET, add the following:

Each pay item in the bid schedule contains an item number. The integer portion of the item number references the specification section related to the pay item. The decimal portion of the item number is established by the agency and is for agency use.

102.5 PREPARATION OF PROPOSAL:

Revise the third paragraph of Section 102.5 to read:

102.5.1 Proposal Preparation:

Contractor shall submit the entire construction specifications document intact and shall complete and submit the following documents with its bid:

(A) No Collusion Affidavit - form must be filled out, signed and notarized.

(B) Verification of License - form must be filled out, dated and signed.

(C) Bid Form - appropriate sections of the form must be filled out, addenda listed, if any, and signed.

(D) Bidding Schedule - must include unit costs, amounts per bid item, and total bid amount. Addenda, if any, must be listed. All notations in the bidding schedule must be legible and in pen or ink.

(E) Surety Bond - proposals must be accompanied by a certified check, cashier's check, or a surety bond for an amount equal to ten percent (10%) of the total amount bid.

(F) All addenda issued by the County for the specific project must be included with the bid and noted on the second page of the proposal.

(G) Sub-Contractor Listing

Other forms - execution of the Contract, submittal of the Performance/Payment Bond and the Certificate of Insurance is not required at the time of bid submittal. These documents must be submitted to the County by the successful bidder at time of contract execution.

Contractor may be required to provide proof of satisfactory completion of similar public works projects.

Add the following to Section 102.5:

It shall be the responsibility of the prospective bidder to determine, prior to the submittal of its bid, if any addenda to the project have been issued by Maricopa County. All addenda issued, if not already bound in the Special Provisions, shall be submitted by bidder with its bid and noted in the proposal section. All quantity adjustment, required as a result of the addendum, shall be reflected on the bidding schedule in pen and ink.

Bids which do not reflect the appropriate changes on the bidding schedule, do not have all issued addenda attached and noted in the proposal section of the Contract, will be rejected by the County.

Prospective bidders may call Maricopa County, Office of Procurement Services in order to ascertain if addenda have been issued for this project.

102.6 SUBCONTRACTORS' LIST, add the following:

The Contractor shall submit to the County with the Bid documents a listing of all major Subcontractors and Material Suppliers the Contractor intends to use in the performance of the work specified in this contract. In determining the amount of work assigned to each Subcontractor, the Contractor shall adhere to the mandates set forth in Section 108.2, Subsection E, of the MAG Uniform Standard Specifications.

SECTION 103

AWARD AND EXECUTION OF CONTRACT

103.6 CONTRACTOR'S INSURANCE:

103.6.1 General, revise the insurance amount for MINIMUM LIMITS OF LIABILITY to be as follows:

General Liability	$2,000,000	Each Occurrence
	$2,000,000	Personal & Advertising Injury
	$4,000,000	General Aggregate
	$4,000,000	Products/Completed Operations
Automobile Liability	$2,000,000	Each Occurrence
Workers' Compensation	$1,000,000	Each Accident
	$1,000,000	Disease for Each Employee
	$1,000,000	Disease Policy Limit

These are the minimum coverages required on each contract. Other coverages may be required depending on the Scope of Work and will be listed on the Request for Proposal.

SECTION 104

SCOPE OF WORK

104.1 WORK TO BE DONE:

104.1.1 General, add the following:

The work shall be as described in the specifications, as shown on the project plans, and in compliance with permit requirements. Specifications shall be the latest revision of the Maricopa County Association of Governments' Uniform Standard Specifications for Public Works Construction as modified by the Maricopa County Department of Transportation's Supplement to MAG and the project Special Provisions.

104.1.4 Cleanup and Dust Control, add the following:

Contractor shall dispose of excess material or construction debris on an as-needed basis in order to keep the site safe to Contractor's personnel and the general public. Construction debris shall be disposed of only in a manner or in a location approved by the Engineer. The Contractor shall upon request file with the Engineer the written consent of the owner of any off-site location designated to receive excess material or debris.

Contractor shall be responsible for the safe and clean condition of the site during the entire period the site is under Contractor's care, custody and control.

104.3 VALUE ENGINEERING

Section 104, add the following:

104.3.1 Purpose:

This clause defines a Construction Incentive Change Order Proposal ("CICOP") and establishes the policy and procedure for the application of CICOP's in the Maricopa County construction process.

104.3.2 Definition:

A CICOP is a defined, written proposal for a change order during construction and shall be initiated, developed and identified by Contractor. The CICOP shall result in gross capital savings and a net capital improvement cost reduction, shall not increase the total maintenance cost of the project and shall meet the following requirements:

104.3.2.1 All Time Extensions for the project shall be agreed upon by both parties at the time the CICOP is approved. The County's determination shall be binding upon the Contractor and shall not be subject to challenge.

104.3.2.2 The CICOP shall not alter the initially intended function, quality and safety standards of the project.

104.3.2.3 The CICOP shall not change the overall scope of the work, which would require a re-bidding of the project.

104.3.2.4 The CICOP shall not conflict with any contract provisions regarding proprietary and restrictive specifications for bids in connection with Uniform Standard Specifications and details, or any other applicable specifications.

104.3.2.5 The CICOP shall not cause undue interruption of the contract work schedule.

104.3.2.6 The proposed changes in connection with the CICOP shall comply with all federal, state and local regulations, mandates and permits.

104.3.2.7 If the Contractor wishes to submit a CICOP, he shall submit a preliminary CICOP in writing, which shall address all components required for a final CICOP, in summary form. The County will review the preliminary CICOP and inform the Contractor in writing if the

County wishes to implement the CICOP. The Contractor would then be requested to prepare a detailed final CICOP.

104.3.3 Applicability:

All Maricopa County construction contracts.

104.3.4 Content:

The CICOP shall contain pertinent information and support documentation to allow comprehensive review by the appropriate contracting agency. At a minimum, the CICOP shall include the following information:

104.3.4.1 Name and title of individuals associated with the design and preparation of the CICOP.

104.3.4.2 Detailed scope description with sealed plans and specifications. A comparison summary of present design, proposed changes and detailed description of the advantages and disadvantages for each change proposed. The CICOP shall be sealed and signed by a Professional Engineer.

104.3.4.3 Comprehensive procedure and schedule outlining implementation of CICOP, including all required contract amendments and the absolute latest approval date for the CICOP.

104.3.4.4 Estimated cost summary which shall include but not necessarily be limited to the following:

104.3.4.4.1 Project cost with and without CICOP, which shall include the following items:

104.3.4.4.1.1 Quantities of materials and equipment.

104.3.4.4.1.2 Unit prices for materials and equipment.

104.3.4.4.1.3 Hourly rates and total labor hours required for installation.

104.3.4.4.1.4 Overhead and fee percentage of Contractor and all subcontractors of any tier involved in the performance of the work outlined in the CICOP.

104.3.4.4.2 Operations and maintenance cost prior to and after implementation of CICOP.

104.3.4.4.3 Implementation cost of the CICOP not covered in Section 104.3.4.4.1.4, above.

104.3.4.4.4 Contractor's cost of the savings, based on the formula specified below.

104.3.4.4.5 Other pertinent data, as may be required by the County to prepare and execute a change order to the Contract.

104.3.4.4.6 If Contractor fails to notify the County of all required changes for the CICOP during the initial CICOP approval stage, Contractor shall absorb all costs connected with the implementation of changes of which the County was not made aware of. If conditions occur, which could not be foreseen by any prudent Contractor, the County may enter into negotiations with Contractor and make the necessary cost adjustments to the Contract.

104.3.4.4.7 All CICOP's become public record when submitted to the County for review and approval. Propriety information may be protected by Contractor**.**

104.3.4.4.8 For CICOP's accepted by the County, processing procedure for change orders shall be used.

104.3.4.4.9 If a CICOP is rejected by the County, Contractor may not appeal such a rejection.

104.3.5 Sharing Provisions:

Upon acceptance and implementation of a CICOP, Contractor will share the net capital savings derived from the implementation of the CICOP, in accordance with the formula outlined below:

104.3.5.1 Initial construction cost minus revised construction cost minus CICOP development cost and CICOP implementation cost equals Net Capital Savings.

104.3.5.1.1 The CICOP implementation cost shall include Contractor's actual cost and fee for reviewing and redesigning the CICOP, documented to the satisfaction of the County.

104.3.5.1.2 CICOP development cost shall include Contractor's cost directly associated with the preparation of the CICOP package, documented to the satisfaction of the County.

104.3.5.1.3 CICOP implementation and development costs shall include COUNTY costs for review and approval of the CICOP package.

104.3.5.2 Sharing Formula: Net Capital Savings, calculated in accordance with the formula outlined in Section 104.3.5.1, above, shall be shared with Contractor on an equal 50/50 percentage basis.

SECTION 105

CONTROL OF WORK

105.1 AUTHORITY OF THE ENGINEER, add the following:

The Engineer may adjust design grades or adjust the location of structures (especially drainage structures) prior to construction. Such adjustments are considered minor changes in the work and do not constitute extra work.

105.2 PLANS AND SHOP DRAWINGS, add the following:

Initial submittal for review – five copies, of which one copy will be returned to the Contractor within five working days.

Final submittal for approval – five copies, of which two copies will be returned to the Contractor within five working days.

105.4 COORDINATION OF PLANS AND SPECIFICATIONS:

Section 105.4 is replaced with the following:

Contractor shall perform the work under this Contract in accordance with the intent of the Plans and Specifications and shall not take advantage of any error or omission in the Plans and/or specifications. In the event Contractor discovers an error or omission in the Plans and/or specifications, Contractor shall promptly advise the Engineer of such an error or omission. If Contractor fails to notify the Engineer of an error or omission in the Plans and/or specifications, which Contractor has discovered or should have discovered through the exercise of reasonable diligence, any additional work required as the result of such errors or omissions, shall be compensated by the County on a force account basis and such compensation shall be the exclusive compensation to Contractor for any costs, expenses or damages resulting directly or indirectly from the correction of such errors and omissions.

105.6 COOPERATION WITH UTILITIES, add the following:

Contractor is solely responsible for any damage to existing utilities resulting from Contractor's operations at the site. The use of hand tools to expose a marked facility is required when proposed excavation is within the 2.0-foot tolerance zone of a marked facility, or if uncertainty exists as to the exact location of a facility.

An attempt has been made by the County to identify the location of all underground utilities located within the perimeter of the site and to design the location and elevation of all irrigation and drainage pipes, culverts and structures to avoid interference with existing utilities. It shall be the Contractor's responsibility to cooperate with the appropriate utility companies in order to facilitate requested adjustments of obstructing utilities. (Please refer to the Special Provisions for specific telephone numbers and contact persons of utilities within the project area).

Contractor's installation of conduits, brackets, piping, valve adjustments or other material at the request and for the convenience of the utility shall be paid by the utility unless specifically identified otherwise in the plans or the Special Provisions. Contractor shall make all required arrangements for such construction and payment with the utility. The County will not extend the performance period of the contract to accommodate construction performed for the convenience of the utility.

105.8 CONSTRUCTION STAKES, LINES AND GRADES:

The first paragraph of Section 105.8 of the Uniform Standard Specifications is revised to read:

Maricopa County will furnish one time the necessary survey control for the Contractor's guidance. Staking shall consist of the following:

(A) Right-of-Way lines at 100 ft. intervals for clearing, fencing, and control of Contractor's operations.

(B) Slope stakes shall be offset from the edge of the embankment at 100 ft. intervals.

(C) Blue tops in subgrade at centerline and edge of pavement at 100 ft. intervals except on curves. Contractor shall have all material in place and compacted within 2.5 inches± prior to requesting the survey crew.

(D) Blue tops on aggregate base course at centerline, edge of pavement, and 1/4 points at 50 ft. intervals. Contractor shall have all material in place and compacted within 2.5 inches ± prior to requesting the survey crew.

(E) Catch basin stakes shall be offset at 10 ft. and 15 ft. to the center of the structure with cuts or fills shown to the top of grate.

(F) Grade and line stakes for all structures, pipe lines, culverts, and ditches.

(G) Straddle points for permanent monuments.

105.12 MAINTENANCE DURING CONSTRUCTION, add the following:

The Contractor shall be responsible to protect the construction site, construction activities, and new construction from the detrimental effects of weather, including flooding, until acceptance by the Engineer.

105.15 ACCEPTANCE, add the following:

The Contractor may request an inspection to establish substantial completion when all of the following have occurred:

- All pavement, pavement markings and signing are complete and accepted and traffic can move unimpeded through the project at the posted speed;
- All pedestrian pathways are completed and accepted and pedestrians are not restricted by any construction activity;
- All guardrails, drainage devices, ditches, excavation and embankment have been accepted;
- The only work left for completion is incidental, away from vehicle and pedestrian traffic, and does not affect the safety or convenience of the traveling public.

A notice of substantial completion shall be issued when the Engineer determines after an inspection that all conditions for substantial completion have been met. The decision whether the project is substantially complete is within the sole discretion of the Engineer. The inspection date requested by the Contractor for the substantial completion inspection shall be the date of substantial completion if the Engineer determines the conditions for

substantial completion have been met. Liquidated damages shall not be assessed after the substantial completion date.

SECTION 106

CONTROL OF MATERIALS

106.1 SOURCE OF MATERIALS AND QUALITY, add the following:

All materials not specifically noted as provided by the County or other participating agency shall be obtained from commercial sources. Contractor shall pay all royalties or any other charges or expenses incurred in connection with the securing and hauling of the material. Contractor shall provide the Engineer with a list of proposed commercial sources prior to utilization of such sources and shall present satisfactory evidence that the material obtained from the commercial sources meets the specifications of this project.

The Contractor is responsible for providing quality control measures and testing necessary to provide acceptable quality in the production, handling, and placement of all materials. Engineer's testing is for quality assurance and acceptance. The cost of quality control measures and testing shall be included in the unit price of related items.

If the use of borrow material is required during the performance of the work outlined in the Construction Specifications, Contractor shall assure that the borrow material used for the project, if the source is other than that recommended by the County, does not contain any substances which may be harmful to humans, animals, vegetation, ground and surface water, and the environment and which are regulated under the Hazardous Material Transportation Act, the Toxic Substances Control Act, the Resource Conservation and Recovery Act (RCRA) and the Comprehensive Environmental Response, Compensation, and Liability Act (CERCLA).

106.4 TRADE NAMES AND SUBSTITUTES, replace with the following:

Whenever an item of material or equipment is specified or described in the Contract Documents by using the name of a proprietary item or the name of a particular supplier, the specification or description is intended to establish the type, function and quantity required. Unless the specification or description contains or is followed by words reading that no like equivalent or "or-equal" item or no substitution is permitted, other items of material or equipment of other suppliers may be accepted by the Engineer under the following circumstances:

106.4.1 "Or-Equal":

(A) If in the Engineer's sole discretion an item of material or equipment proposed by the Contractor is functionally equal to that named and sufficiently similar so that no change in related work will be required, it may be considered by the Engineer as an "or-equal" item, in which case review and approval of the proposed item may, at the Engineer's sole discretion,

be accomplished without compliance with some or all of the requirements for acceptance of proposed substitute items.

(B) Substitute Items: If in the Engineer's opinion an item does not qualify as an "or-equal" item under 106.4.1(A), it will be considered a proposed substitute item. The Contractor shall submit sufficient information, as provided below, to allow the Engineer to determine that the item of material or equipment proposed is essentially equivalent to that named and an acceptable substitute therefore. The procedure for review by the Engineer will include the following as supplemented in the Special Provisions and as the Engineer may decide is appropriate under the circumstances. Requests for review of proposed substitute items of material or equipment will not be accepted by the Engineer from anyone other than the Contractor. If the Contractor wishes to furnish or use a substitute item of material or equipment, the Contractor shall first make written application to the Engineer for acceptance thereof, certifying that the proposed substitute will perform adequately the functions and achieve the results called for by the general design, be similar in substance to that specified and be suited to the same use as that specified. The application will state the extent, if any, to which the evaluation and acceptance of the proposed substitute will prejudice the Contractor's achievement of completion on time, whether or not acceptance of the substitute for use in the work will require a change in any of the Contract Documents (or in the provisions of any other direct contract with County for work on the project) to adapt the design to the proposed substitute and whether or not incorporation or use of the substitute in connection with the work is subject to payment of any license fee or royalty. All variations of the proposed substitute from that specified shall be identified in the application and available maintenance, repair and replacement services shall be indicated. The application shall also contain an itemized estimate of all costs or credits that will result directly or indirectly from acceptance of such substitute, including costs of redesign and claims of other Contractors affected by the resulting change, all of which will be considered by the Engineer in evaluation the proposed substitute. The Engineer may require Contractor to furnish additional data about the proposed substitute.

(C) All data provided by Contractor in support of any proposed "or-equal" or substitute item will be at Contractor's sole expense.

106.4.2 Substitute Construction Methods or Procedures:

If a specific means, method, technique, sequence or procedure of construction is shown or indicated and expressly required by the Contract Documents, Contractor may furnish or use a substitute means, method, technique, sequence or procedure of construction acceptable to the Engineer. Contractor shall submit sufficient information to allow the Engineer at the Engineer's sole discretion, to determine that the substitute proposed is equivalent to that expressly called for by the Contract Documents. The procedure for review by the Engineer will be similar to that outlined in Section 106.4.1.

106.4.3 Engineers Evaluation:

The Engineer will be allowed a reasonable time within which to evaluate each proposal or submittal made pursuant to Sections 106.4.1 and 106.4.2, above. The Engineer will be the sole judge of acceptability. No "or-equal" or substitute shall be ordered, installed or used without the Engineer's prior written acceptance which will be evidenced by either a Change Order or an approved Shop Drawing. The County may require Contractor to furnish at Contractor's expense a special performance guarantee or other surety with respect to any "or-equal" or substitute. The Engineer will record time required by the Engineer and the County's consultants in evaluating substitutes proposed or submitted by Contractor

pursuant to Sections 106.4.1 and 106.4.2, above and in making changes in the Contract Documents occasioned thereby. Whether or not Engineer accepts a substitute item so proposed or submitted by Contractor, Contractor shall reimburse the County for cost incurred for the evaluation of the proposed substitute item by the Engineers and/or County's consultant.

SECTION 107

LEGAL REGULATIONS AND RESPONSIBILITY TO PUBLIC

107.1 COMPLIANCE WITH LAWS, add the following:

Contractor, in connection with any activity under this Contract, shall not discriminate against any person on the grounds of race, color, religion, sex, national origin, age, disability, political affiliation or belief. Contractor shall include a clause to this effect in all subcontracts. Contractor shall also comply with all applicable provisions of the Americans with Disabilities Act of 1990.

Contractor and its subcontractors and their respective employees, agents, and representatives, when performing the work described in the Construction Specifications, shall comply with all rules and regulations set forth by the County, pertaining to the safety, loss control and environmental regulations, and shall perform the work in compliance with governmental laws and regulations pertaining to occupational health, and environmental protection, including any local sound control and noise level rules, regulations and ordinances which apply to any work performed pursuant to the contract.

Contractor is solely responsible for jobsite ("site") conditions during all phases of construction, beginning with Contractor's mobilization of equipment and/or personnel until the work has been accepted by the Engineer and a certificate of completion has been issued by the County. Contractor's responsibility for the site during the period specified above shall not be limited to Contractor's working hours and shall include but not necessarily be limited to the following:

* Physical condition of the site;
* Safety of Contractor's personnel at the site and all other persons entering the site or areas adjacent to the site;
* Security of Contractor's equipment and material; and
* Reasonable aesthetic appearance of the site.

Contractor shall ensure that internal combustion equipment is operated with a muffler of a type recommended by the manufacturer.

The Contractor shall ensure that contract operations are in compliance with procedures and requirements of the Maricopa County Air Pollution Control rules and ordinances with special attention given to the fugitive dust requirements. The Contractor shall pay any

penalties imposed upon MCDOT where the violation is a direct result of actions or inactions by the Contractor, the contractor's employees or subcontractors.

107.1.1 SMALL BUSINESS ENTERPRISE PROGRAM (SBE)

It is Maricopa County's policy to endeavor to ensure in every way possible that small business participation firms shall have the opportunity to provide professional services, materials, and contractual services to the County in a nondiscriminatory manner.

107.2 PERMITS, add the following:

It is the Contractor's responsibility to obtain all permits and licenses, pay all fees, charges, and taxes and prepare all required notices for the lawful execution of the work.

107.2.1 AZPDES (NPDES) Construction General Permit Requirements:

The Contractor shall comply with the Arizona Pollutant Discharge Elimination System (AZPDES) requirements and conditions administered by the Arizona Department of Environmental Quality (ADEQ). Compliance with AZPDES also includes compliance with the requirements of all Municipal Separate Storm Sewer Systems (MS4) that are within the project limits. For projects that include Indian Country lands, the Contractor shall also be responsible for compliance with the National Pollutant Discharge Elimination System (NPDES) requirements of the Environmental Protection Agency (EPA).

107.2.1.1 Regulation Compliance: The Contractor, contractor employees, and subcontractors shall not discharge stormwater or non-stormwater from the construction site that is not in compliance with requirements and conditions of the AZPDES Construction General Permit for Arizona (AZCGP) as well as all other applicable federal, state and local laws, ordinances, statutes, rules and regulations pertaining to stormwater discharge and air, ground water and surface water quality.

The Contractor is an operator, having day-to-day operational control of those activities at a project which are necessary to ensure compliance with a Stormwater Pollution Prevention Plan (SWPPP) for the site and other permit conditions. The Contractor is responsible for preparing, in a manner acceptable to the ADEQ and the EPA, all documents required by regulation, which shall include but not necessarily be limited to the following:

- Notice of Intent (NOI).
- Stormwater Pollution Prevention Plan (SWPPP).
- Notice of Termination (NOT).

107.2.1.2 NOI Submittal: Stormwater discharges associated with the construction activity are authorized by ADEQ consistent with the terms and conditions established in

the general permit. The Contractor shall submit a NOI to obtain authorization to discharge under the AZPDES general permit, The Contractor shall identify on the NOI all non-stormwater discharges associated with the project's construction activities; shall acknowledge that it is eligible for coverage under the general permit and shall agree to the conditions in the published AZCGP.

Preliminary copies of the NOI and the SWPPP shall be available to the County during the pre-construction conference.

The Contractor shall ensure the completed and duly signed NOI is submitted in a timely manner to prevent a delay to project construction.

The NOI shall be submitted to ADEQ's online portal, using
myDEQ http://www.azdeq.gov/node/2964

If the construction site is located within ¼ mile of an impaired or not-attaining or an outstanding Arizona water, the SWPPP shall be submitted with the NOI. ADEQ can take up to thirty (30) calendar days to issue an NOI certificate for construction sites near impaired, not attaining or outstanding waters, as well as for construction sites with special concerns, therefore documentation is to be submitted to ADEQ as early as possible.

If the construction site is located within a municipal boundary the Contractor shall send a copy of the ADEQ certificate authorizing permit coverage to the local MS4 authority(s).

When project activities require work within Indian Country land, a NOI shall be submitted to the EPA. Submittal requirements can be obtained through the
website: https://www.epa.gov/npdes/stormwater-discharges-construction-activities

A copy of all submitted NOI forms shall be posted at the construction site.

An individual permit may be necessary if the limitations of the general permit coverage section of a general permit does not allow the construction's discharge to be covered within the general permit. It is the Contractor's responsibility to verify if any of the limitations of coverage apply to their work.

107.2.1.3 Time Extension: Failure by the Contractor or subcontractor of any tier to submit a NOI within the mandated time frame shall result in delay of the construction start date and no claims for extension of time will be granted for such a delay.

107.2.1.4 SWPPP: The Contractor shall develop, sign and certify, implement, update, amend, and revise the SWPPP, as necessary, to assure compliance with permit requirements. The Contractor shall address in the SWPPP, all non-stormwater discharges that are expected to be associated with the project's construction activities as required by the AZCGP.

The Contractor shall ensure that:

- The SWPPP indicates the areas of the project where the County or other entity has operational control over the project specifications, including the ability to make modifications in specifications.
- All other operators implementing portions of the SWPPP impacted by changes made to the SWPPP are notified of such modifications in a timely manner.
- The SWPPP indicates the parties with day-to-day operational control and parties responsible for implementation of the best management practices (BMPs) identified in the SWPPP.

The Contractor and subcontractors shall ensure that construction activities do not render another party's BMP(s) ineffective.

The Contractor shall post the SWPPP authorization number(s) in a conspicuous location near the entrance where most of the construction activity is occurring. A copy of the ADEQ authorization certificate shall be retained with the SWPPP. The SWPPP and a copy of the ADEQ authorization certificate shall be retained on the project site at all times during construction. Copies of forms and guidance for preparing the SWPPP are available in the "Drainage Design Manual for Maricopa County, Volume III Erosion Control." The manual is available at the Flood Control District, 2801 West Durango Street, Phoenix, Arizona 85009. In addition, a SWPPP checklist and template can be obtained from ADEQ for assisting in the preparation of the SWPPP.

107.2.1.5 Inspections: Contractor shall perform inspections, by qualified personnel, of all stormwater pollution control devices on the project using one of three inspection schedules required under the provisions of the AZCGP. The SWPPP must document which inspection frequency was chosen. Contractor shall prepare reports, in accordance with the AZCGP, on such inspections and shall retain the reports for a period of at least three (3) years following the completion of the project. The Contractor shall maintain all stormwater pollution control devices on the project in proper working order, which shall include cleaning and/or repair during the duration of the project.

107.2.1.6 NOT Submittal: Upon project completion, acceptance and demobilization, Contractor shall submit to ADEQ a completed, duly executed NOT form for each NOI issued, with a copy of the NOT acknowledgement letter to appropriate MS4 authority(s), thereby terminating all AZPDES permit coverage for the project. Contractor shall then provide to the County copies of the SWPPP, inspection information and all other documents prepared and maintained by the Contractor in compliance with the AZCGP, including records of all data used to complete the NOI. Contractor shall retain the originals of such documents for a period of at least three (3) years following the completion of the project and make such documents available for inspection by representatives of the EPA, the ADEQ, the County, and any municipality having jurisdiction, upon request.

107.2.1.7 Fines and Penalties: Fines and penalties imposed by the ADEQ, MS4 authority, or the EPA for Contractor's failure to comply with any of the AZPDES permit requirements and conditions shall be borne by the Contractor. Until paid by the

Contractor said fines and penalties may be withheld from monies due or becoming due the Contractor.

107.2.1.8 Payment: Payment for AZDDES will be a reimbursable allowance based on approved time and materials invoices, in accordance with Section 109.5. The amount paid for under the allowance for AZPDES shall include all material, labor, and costs relating to Permits for Stormwater compliance the NOI, NOT, and the SWPPP. This includes but is not limited to the preparation, installation, maintenance, and removal of temporary SWPPP elements, assuring proper operation of the pollution control devices installed, and all maintenance, cleaning, and disposal costs associated with clean-up and repair following storm events, runoff or releases on the project.

107.2.2 Dust Control Permit

Permits for dust control (or earthmoving) may be obtained from Maricopa County Air Quality Department, 1001 North Central Avenue, Suite 400, Phoenix, Arizona 85004, telephone Number (602) 506-6010, website https://www.maricopa.gov/1244/Air-Quality . A copy of the dust control (earthmoving) permit and dust control plan shall be submitted to the Engineer prior to commencement of any earthmoving activities.

107.3 PATENTED DEVICES, MATERIALS AND PROCESSES, add the following:

All materials not specifically noted as provided by the County or other participating agency shall be obtained from commercial sources. Contractor shall pay all royalties or any other charges or expenses incurred in connection with the securing and hauling of the material. Contractor shall provide the Engineer with a list of proposed commercial sources prior to utilization of such sources and shall present satisfactory evidence that the material obtained from the commercial sources meets the specifications of this project.

107.4 ARCHAEOLOGICAL REPORTS, add the following:

If previously unidentified archaeological, historical, or paleontological features are encountered during any activity related to construction of a County project, the Contractor shall stop work immediately at that location and shall notify the Engineer. The Engineer will notify MCDOT Environmental Program Branch (602-506-8082) to evaluate the significance of the resources and determine the appropriate next action.

107.5 SAFETY, HEALTH AND SANITATION PROVISIONS:

Section 107.5 add the following:

All water for Contractor's own use, drinking water, temporary electric power, heat, and telephone services shall be provided by the Contractor, at the Contractor's sole expense.

107.5.3 HAZARDOUS MATERIAL HANDLING

107.5.3.1 Material Safety Data Sheets: Contractor shall furnish to the County Safety Data Sheets (SDS) for all regulated and/or hazardous substances which Contractor plans to bring to the site and which may be harmful to humans, animals, vegetation, ground and surface water, and the environment and which are regulated under the Hazardous Material Transportation Act, the Toxic Substances Control Act, the Resources Conservation and Recovery Act, and the Comprehensive Environmental Response, Compensation, and Liability Act.

107.5.3.2 Regulated and/or Hazardous Materials: Contractor shall further furnish to the County prior to the start date of the work a list of all regulated and/or hazardous materials, identified above, which Contractor intends to bring to the site. The list shall contain the following information:

Quantity of material
Description of material
Intended use of the material

Additionally, Contractor shall furnish the County with Safety Data Sheets for all regulated and/or hazardous substance Contractor plans to bring to the site or use during the performance of the work.

Contractor shall immediately report spills of oil, gasoline, diesel, lubricants, chemicals and other hazardous material or regulated substances to the County and to all federal, state and local agencies having jurisdiction. Accidental spills shall be immediately contained, the spilled material and contaminated soil removed in accordance with the guidelines established on the Safety Data Sheets and in accordance with all applicable federal, state and local laws, mandates, regulations and ordinances. After completion of the clean-up activities, Contractor shall restore the spill area to preexisting conditions.

107.5.3.3 Identify Potentially Hazardous Materials: The County will make reasonable effort to locate and identify potentially hazardous materials and/or underground storage tanks within the project area, prior to construction.

In the event material is found by the Contractor or subcontractors of any tier, during the performance of the work, that is suspected to be hazardous, Contractor shall follow the following procedure:

(A) Call “911” in a life threatening situation.

(B) Stop work at the affected area and remove all personnel from that area.

(C) Barricade the area and provide traffic control to prohibit unauthorized entry.

(D) Notify the Maricopa County Safety Office (602 506-8601) and the Engineer.

(E) Notify the appropriate regulatory agency(ies) and emergency services.

The Engineer, in consultation with the appropriate regulatory agencies and emergency services, will determine the necessary remediation plan for the Project.

Remediation activities shall only be performed by a certified hazardous waste disposal remediation company, approved by the County.

107.5.4 Energized Electric Power Lines: Whenever the Contractor has construction equipment and personnel in the immediate vicinity of energized aerial electric power lines, the Contractor shall not consider these lines to be insulated. Construction personnel working in proximity to these lines are exposed to extreme hazard from electrical shock. Contractors, their employees, and all other construction personnel working on this project must be warned of the danger and instructed to take adequate protective measures, including maintaining a minimum clearance between the lines and all construction equipment and personnel. Minimum clearances to be maintained are ten (10) feet from 12kv lines, eleven (11) feet from 69kv lines and sixteen (16) feet from 230kv lines (see OSHA Std. 1926.550 (a) 15 and Arizona Revised Statutes 40.360.41 through 45.). When it is necessary to work less than the designated distance from energized power lines the Contractor must notify the appropriate utility company and make necessary arrangements which will ensure adequate protection of personnel, equipment and the utility company power lines. The cost of such temporary arrangement will be borne by the Contractor.

107.5.5 Safety Plan: The Contractor’s Safety Plan, in accordance with 29 CFR1926.20, shall be completed by the Contractor. Contractor Safety Plan Guidelines are available on the MCDOT website at: http://www.maricopa.gov/190/Technical. The Safety Plan together w OSHA 300 & 300A logs for the previous three years shall be submitted to the Construction Engineer no later than five (5) business days prior to the pre-construction conference.

The Contractor will be provided with an electronic copy of the Maricopa County Injury and Illness Prevention Plan.

107.6 PUBLIC CONVENIENCE AND SAFETY, add the following:

107.6.3 Control of Airborne Pollutants and Sediment Tracking: Contractor shall cover dump trucks while transporting materials that may become airborne during transit. After

dumping of such materials, Contractor shall either cover truck bed or take measures to remove all residues that may become airborne.

Contractor shall minimize off-site tracking of sediments by brushing or blowing off construction vehicles, or any other method deemed appropriate by Contractor, prior to exiting the construction site.

107.6.4 Protective Fencing: The Contractor shall furnish and install 6-foot high temporary chain link fencing, or approved equal, satisfactory to the Engineer, around all major structure construction areas (i.e., bridges, pump houses, drop structures, retaining walls, etc.) and around any unattended excavations with slopes steeper than 2:1. Temporary fencing shall completely enclose the construction activity and shall be secured after normal working hours to prevent unauthorized access.

Section 107, add the following new section:

107.15 COMMUNITY RELATIONS SUPPORT:

107.15.1 General: The Contractor for Maricopa County contracted work shall provide assistance to the County's Communications Branch at MCDOT in support of the project's community relations program.

The Contractor shall provide the MCDOT Public Information Officer with information needed to inform the public, emergency services, businesses, local residents, service providers and stakeholders of construction times and activities. This information includes, but is not limited to:

- Scheduled working days
- Hours of work
- Road and intersection closures
- Changes to property access or traffic switches
- Detour~~s~~ Routes
- Utility disruptions affecting residents and businesses
- Expected commute delays exceeding 20 minutes more than normal commute times
- Transit or school bus route impacts
- Delivery/pick-up disruptions including mail and trash
- Lane restrictions
- Night work (pre-approval required)

Specific details for the above listed information, including but not limited to traffic control plans and details, specific detour routes, changes to property access, and utility disruptions affecting properties, shall be provided to the Engineer and the Public Information Officer 30 days in advance of the anticipated event, even if specific

scheduled dates are not available. The specific scheduled dates of work shall be provided to the Public Information Officer per the timelines listed below:

- 14 days prior to the commencement of actual construction work activities
- 14 days prior to full roadway or intersection closures
- 10 days prior to change in property access or traffic switches
- 10 days prior to lane restrictions

Public notification documents will be developed by the Public Information Officer. The Contractor shall distribute project notifications including door hangers to local businesses, emergency services and residents when requested by the Engineer. A signed affidavit, area map, number of notifications delivered and date of notification will be required as proof of notification for payment.

A delay to the start of construction or task activities due to the Contractor not providing the required information to the Public Information Officer and the Engineer per the prescribed timeline will not be a cause for a delay claim or result in additional cost to the project.

The Contractor shall assist the Engineer and the Public Information Officer in responding to questions or complaints concerning construction operations or procedures by providing information to the Public Information Officer and the Engineer.

107.15.2 Public Meetings: The Contractor shall attend and participate in business coordination and public meetings when deemed necessary by the Engineer. Meeting times, locations, and agenda will be determined by the Engineer and the MCDOT Public Information Officer. The Contractor may be required to attend a public pre-construction meeting at a location convenient to residents and business operators affected by the project. This meeting may be conducted after execution of contract documents and prior to the start of construction. The meeting if conducted prior to the Notice to Proceed shall not be included in the Contract Time.

107.15.3 Project Notification Message Boards: The Contractor shall provide and maintain changeable message boards when and in locations required by the contract documents or requested by the Engineer. Changeable message boards shall comply with Section 401.5.8 requirements. Changeable message boards shall be installed at least 14 calendar days before beginning construction to inform the public of the forthcoming project. Messages will be provided to the Contractor. The Contractor shall update messages as requested by the Engineer. Measurement and payment provisions for changeable message boards are defined in Section 401 Traffic Control.

107.15.4 Existing Conditions Documentation: The Contractor shall document existing property conditions within a 100-foot (minimum) radius of the project limits prior to construction. Documentation shall be saved on a flash drive with digital M-PEG video (180 DPI or greater). If the video is made from a moving vehicle, it shall be at a logical pace with frequent stops at critical locations. One (1) copy of the documentation

package shall be provided to the Engineer within 10 calendar days of the Notice to Proceed date and at least one day prior to commencement of construction operations.

107.15.5 Payment: Payment for COMMUNITY RELATIONS SUPPORT will be based on approved time and material invoices in accordance with Section 109.5 for authorized work performed in assisting with the project's public information program. Proof of timely notification to residents, businesses, emergency services and delivery service providers will be required for payment.

107.15.6 Roadside Memorials: If memorials are located within the Contractor's designated work zone and present a potential conflict to operations, the Contractor shall contact the Public Information Officer at 602-506-3342 to arrange for relocation. County forces will be responsible for removal and storage of roadside memorials within the work zone.

SECTION 108

COMMENCEMENT, PROSECUTION AND PROGRESS

108.1 NOTICE TO PROCEED:
Add section 108.1.1 as follows:

108.1.1 Pre-Construction Conference: After execution of the Contract by both parties and prior to the commencement of the work, the Engineer will schedule a pre-construction conference at the facilities of the Maricopa County Department of Transportation located at 2901 West Durango Street, Phoenix, AZ 85009. Contractor shall be represented at a minimum by a company official with signature authority on behalf of its organization.

Contractor shall submit to the Engineer during the pre-construction conference the following documents:

(A) List of all subcontractors

(B) List of all material sources

(C) Assumptions and calculations used to determine each of the unit prices

(D) Preliminary work schedule

(E) Traffic control plans

(F) Emergency telephone numbers

(G) Signing authority letter

(H) Name and telephone number of the certified safety professional

(I) Copies of all Permits required for project Construction

(J) Preliminary SWPPP and NOI

The following items shall be submitted at the preconstruction conference when reasonably feasible. When not submitted at the preconstruction conference, the submittal(s) shall be specifically shown in the work schedule. The submittals shall be scheduled at least 45 days prior to intended use and/or material transport to the project site.

(K) Material safety data sheets

(L) Mix designs

(M) Manufacturer's certification for all materials

(N) Shop drawings

The pre-construction conference will cover topics such as critical elements of the work schedule, payment application and the processing of invoices. Additionally, a scheduled start date for the work will be determined.

108.2 SUBLETTING OF CONTRACT, add the following:

The Engineer will not consent to subletting of any portion of the contract if a copy of the subcontract or lower tier subcontract is not received. The Engineer's consent shall in no way be construed to be an endorsement of the subcontractor or its ability to complete the work in a satisfactory manner.

The subcontract, purchase order, or lease agreement shall be evidenced in writing and contain all pertinent provisions and requirements of the prime contract. The following data shall be submitted seven calendar days prior to the start of each subcontractor's work.

(A) A complete copy of each subcontractor agreement and each second tier subcontractor agreement.

(B) Verification that all required Federal Provisions; i.e., Federal Form 1273, Executive Order, and Wage Determination Decisions are attached to each subcontract in any federal-aid funded contract.

(C) Subcontracts must show the total price subcontracted. The items of work, and quantities of each item subcontracted shall be shown. Unit Prices or Extended Prices may be deleted except in the case of DBE subcontractors.

(D) DBE subcontracts shall include full extensions of all unit prices.

(E) Partial items shall be explained in detail and show the amount of each contract item being subcontracted. Non-contract item work shall be fully explained.

(F) The contractor shall certify to the County that all of its subcontractors have all required registrations.

108.4 CONTRACTOR'S CONSTRUCTION SCHEDULE, replace with the following:

Contractor shall be solely responsible for the planning, scheduling and execution of the work to assure timely completion of the project.

108.4.1 The initial schedule shall be submitted to the County in triplicate for review at the pre-construction conference. The schedule shall be a schematic (arrow) or precedence diagram, reflecting the work stages and all activities required for the successful completion of the project. The schedule shall show enough detail to allow day to day monitoring of Contractor's operation and shall include major milestone dates for the work.

108.4.2 The schedule shall include a complete critical path schedule and shall include a detailed network diagram with the following elements:

108.4.2.1 Contractor's schedule shall be time scaled in calendar days and all activities shall be recorded from the initial start dates to their completion dates. Unless specific approval was given by the Engineer, the individual activities shall not exceed fifteen (15) calendar days in length. The plot size and scale shall be acceptable to the Engineer**.**

108.4.2.2 The schedule shall reflect the order and the individual categories for each activity described in section 108.4.2.7, below. Critical activities shall be highlighted by use of color or any other method acceptable to the Engineer.

108.4.2.3 The schedule shall include, in addition to all construction activities, such tasks as mobilization, demobilization, submittal and approval of material samples and shop drawings, procurement of major material and equipment items, fabrication of special items and the installation and testing of such items. The schedule shall also reflect coordination activities with other projects.

108.4.2.4 Activities shall show sufficient detail to allow the reviewer to easily follow the sequence of the work, for example, forming, reinforcing and placement of concrete on the specific calendar days such activities are scheduled.

108.4.2.5 The diagram shall show each activity, the preceding and the following activity, the activity description, the total float time, and the duration of the activity in working days.

108.4.2.6 Activity descriptions on the diagram shall be job-specific and not of a generic nature.

108.4.2.7 In addition to the diagram, Contractor shall submit a schedule report of the network outlining the following data for each activity:

(A) preceding and following event and activity numbers

(B) activity description

(C) activity duration

(D) earliest commencement date

(E) earliest completion date

(F) latest commencement date

(G) latest completion date

(H) total float times

(I) responsible party for specific activity

108.4.3 Contractor shall update its schedule as mandated by the following events or as requested by the Engineer.

108.4.3.1 Contractor shall submit to the County on the tenth (10th) working day of each month a construction progress report (three originals and three copies) describing all completed or in progress activities and the level of completion of all activities to date in connection with this project. Detailed information shall be given for all negative float time. If the Engineer determines that any or all parts of the network diagram requires revision, Contractor shall furnish the County with the requested revisions within ten (10) calendar days of such request.

108.4.3.2 The monthly report shall be accompanied by a brief description of the job progress, problems encountered, current and anticipated delaying factors and the potential impact on the project schedule, and a description of corrective measures taken or proposed. It shall also include any departures from earlier schedules, including but not limited to, logical sequence or logical ties, constraints, changes in scheduled activities and the duration of such changes, addition or deletion of event numbers, activity numbers and activity descriptions. Contractor shall outline the reason for the departure from the original schedule.

108.4.3.3 All costs and expenses incurred by the Contractor for the preparation of schedules and/or reports and all revisions thereto, are considered an overhead item and therefore not reimbursable as a separate pay item.

108.4.3.4 In addition to allowances for various activities in connection with the work, Contractor shall base the schedule on normal weather conditions and shall incorporate the following factors:

(A) procurement and shipping times for material
(B) concrete curing time
(C) reasonable allowances for relocation of utilities

108.4.3.5 The Engineer's review of the schedule shall not constitute an acceptance of responsibility by the County for the content of the schedule and shall not relieve Contractor of its obligations to commit all its resources to meet the schedule set forth in the specifications. Free float time within the project's stated contract time limit shall remain available for use by the project. The County or the Contractor may use as needed the available project free float time. The Engineer's review of the schedule shall not constitute a basis for additional time to complete the work specified in the scope of work nor shall it serve as basis for additional compensation.

108.5 LIMITATION OF OPERATIONS, add the following:

Regular work hours vary depending on time of year, the Contractor shall submit proposed weekday regular work hours at the pre-construction meeting (pre-job conference) for approval. The Contractor shall be subject to additional inspection fees for overtime work when work is performed on weekends, legal holidays, or at times other than the approved regular work hours.

The Contractor shall comply with all local noise ordinances. For unincorporated areas the Contractor shall not conduct any work during the hours 7:00 p.m. to 6:00 a.m. without the written approval of the Engineer. Special noise abatement conditions and procedures may be required if nighttime work is approved.

108.8 GUARANTEE AND WARRANTY PROVISIONS, the first paragraph of the guarantee and warranty provisions of the Uniform Standard Specifications shall be replaced with the following paragraphs:

Contractor warrants that the work performed and materials used shall be free of defects for the period of one (1) year from the date of substantial completion (when established) or the date of final acceptance of the work, excluding ordinary wear and tear or unusual abuse and neglect. Additionally, Contractor warrants that all corrections made under the warranty provisions of Section 108.8 of the Uniform Standard Specifications shall be free of defects in workmanship and material for a period of one (1) year, commencing on the day of final acceptance of the corrections by the Engineer.

Failure by the Engineer to reject defective workmanship and/or material during construction shall not be construed as an acceptance of said workmanship and/or material and Contractor shall correct such workmanship and/or material at the request of the County at any time prior to final acceptance of the work and for a one (1) year period thereafter.

SECTION 109

MEASUREMENTS AND PAYMENTS

109.7 PAYMENT FOR BOND ISSUES AND BUDGET PROJECTS, add the following:

The County will accept securities in a form and from a financial institution acceptable to the County, in accordance with the Arizona Revised statutes, Section 34-221, as amended, in lieu of ten percent (10%) retainage on pay estimates, if requested by Contractor**.**

109.8.2 CONTRACTING AGENCY DELAYS, add the following:

Recovery of expenses incurred by Contractor for a delay for which the County is responsible, and which is unreasonable under the circumstances and which was not contemplated by the parties, shall be negotiated between Contractor and the County. This provision shall not be construed to void any provisions of the Contract which require notice of delays, provide for arbitration or other procedures for settlement, or provide for the assessment of liquidated damages.

Part 100 add the following new Section:

SECTION 111

ENGINEER'S OFFICE FACILITIES

111.1 DESCRIPTION:
Contractor shall provide office space with adequate lighting, located on or near the project site for exclusive use by the Engineer during the project construction. Proposed offsite office locations shall be subject to approval by the Engineer. The facility shall be made available concurrent with the construction notice to proceed, and shall remain continuously available for the sole use of the Engineer until seven (7) days after project acceptance. The facility (meeting the requirements of Type I or Type II Engineer Office Facilities) may either be separate or in the same structure or trailer used by the Contractor. If a shared structure or trailer is provided, a separate lockable area, with floor to ceiling walls shall be provided. Trailer type facilities shall be equipped with tie-downs. Type I and Type II Engineer Office Facilities shall be exclusive use facilities for the Engineer. Type II Engineer Office Facilities will be required unless otherwise indicated by the Engineer or the project special provisions.

Contractor shall provide the same level of security for the Engineer's Office Facility as is being provided for the Contractor's field office. Protection against illegal entry, vandalism, and theft shall be provided.

The contractor shall be responsible for maintaining the office and all facilities and equipment therein in good working condition. Utility costs shall be the responsibility of the contractor as well as any fees for permits, sanitary, water, electrical or gas hookups, installation charges, etc.

Contractor shall provide a separate sanitary facility for the Engineer and inspectors. Contractor shall provide janitorial supplies and services to maintain cleanliness of office, meeting spaces, and sanitary facilities. Janitorial services shall be at least twice a week.

Heating and cooling facilities shall be adequate to maintain interior temperature of 72°-78° F.

All office facilities shall be available 24 hours a day, this includes but is not limited to electrical power, water, internet services, etc.

Project completion requires removal of the office and appurtenant structures, utilities, surfacing, etc. and restoration of the affected area(s) to their former condition or improved as required by project plans and specifications.

111.2 Type I Engineer Office Facilities shall consist of a weatherproof insulated temporary office type trailer built to the uniform building code series of codes with floor

plan and equipment layout similar to the following drawing and meeting or exceeding the following minimum requirements:

111.2.1 Facility:

Dimensions (minimum): 28 feet long x 8 feet wide with an inside room height of 7'- 6".

Windows: a minimum of four (4) with provisions for cross ventilation and locking.

Exterior doors: two – shall be reinforced and have dead bolt locks. An exterior landing with steps and handrails shall be located at each door.

Heating: a thermostat controlled forced air unit with a minimum input capacity of 200 BTU per 1.0 square foot of floor area.

Air conditioning: one unit with capacity equal to 8,300 BTU minimum.

Electrical: work shall conform to the national electrical code for 110/220 volts 60 HZ applications and provide reliable uniform power to properly operate all field office equipment.

Lighting: fluorescent lighting directly over all drafting tables and desk areas.

Fire extinguisher: one dry chemical 10 lb class ABC Underwriters Laboratories Inc. approved.

Drinking water: bottled drinking water dispensed from an acceptable cooling device.

111.2.2 Furnishings:

Desk: one desk top 30" deep x full inside room width x 30" high located at office end of the trailer. Supported along each adjacent wall and having one 2-drawer legal size metal filing cabinet center pedestal. Each desktop shall have an overhead shelf and two pen drawers.

Meeting table: one 96" x 30" or two 48" x 30".

Drafting table: one 36" x 72" hinged board. Board to be 37" high at front edge and slope upward at 12:1 (horiz:vert) rate.

Chairs: Two (2) chairs with rollers and two (2) drafting stools each of appropriate height. Ten (10) folding chairs.

Trash receptacles: Two (2) each.

Facsimile machine: One (1) plain paper FAX machine (including toner).

Copy machine: One (1) plain paper copier (including toner) with an automatic document feeder capable accepting multiple size sheets and of sorting 10 stacks.

Printer/scanner/copier: One (1) HP printer/scanner/copier 700 series (or equivalent) including installation software compatible with Windows NT or 2000 and one set of manufacture replacement printing cartridges.

Dry Marker Erase Board: wall mounted adjacent to meeting table, size = 3' x 6' with markers and eraser.

111.2.3 Telephones and Data Circuits:

Two telephones. Three private lines with touch tone service from the local service provider. One phone line is to be shared by the two telephones and have voice mail service from the local service provider. The second phone line is to be a dedicated line connected to the computer. The third phone line is to be a dedicated line connected to the facsimile machine. Trailer wiring shall include four boxes equipped with RJ –11 jacks (two wire pairs per jack) two at each end of trailer.

The dedicated computer line shall be a high-speed DSL line and include internet service. When high-speed internet service is available through a cable TV service, it shall be provided and the corresponding telephone line requirement deleted.

All initial hook up and basic monthly telephone charges, high-speed internet service, basic fax service, and electrical expenses for the Engineer's Office Facility shall be borne by the Contractor. The Contractor will be reimbursed for all long distance charges authorized by the Engineer.

111.3 Type II Engineer Office Facilities shall consist of a weatherproof insulated temporary office type trailer built to the uniform building code series of codes with floor plan and equipment layout similar to the following drawing and meeting or exceeding the following minimum requirements.

111.3.1 Facility:

Dimensions (minimum): 50 feet long x 12 feet wide with an inside room height of 7'- 6".

Windows: a minimum of six (6) with provisions for cross ventilation and locking.

Doors: Two inside doors may be located either at one side or at center of partition. The two exterior doors shall be reinforced and have deadbolt locks. An exterior landing with steps and handrails shall be located at each exterior door.

Heating and Air Conditioning: 3-ton capacity air conditioning and 80,000 BTU capacity heating, connected to ducting and be thermostat controlled.

Electrical: work shall conform to the national electrical code for 110/220 volts 60HZ application and provide reliable uniform power to properly operate all field office equipment.

Lighting: fluorescent lighting directly over all drafting tables and desk areas.

Fire extinguishers: Two (2) dry chemical 10 lb class ABC Underwriters Laboratories Inc. approved.

Drinking water: bottled drinking water dispensed from an acceptable cooling device.

Sanitary facilities consisting of a toilet and wash sink shall be located in a separately enclosed room inside the Type II Facility.

111.3.2 Furnishings:

Desk: one desk top 30" deep x full inside room width x 30" high located at each end of trailer. Desktops are to be supported along each adjacent wall and have two 2-drawer legal size metal filing cabinets acting as pedestals. Each desktop shall have an overhead shelf and two pen drawers.

Drafting table: one 36" x 72" table. Board to be 37" high at front edge and slope upward at 12:1 (horiz:vert) rate or have provision for adjusting the slope.

Tables: Three (3) 48" x 30" tables.

Chairs: Four (4) chairs with rollers and two (2) drafting stools, each of appropriate height. Fourteen (14) folding chairs.

Trash receptacles: Three (3) each.

Plan storage: a plan rack or file for full size plans.

Facsimile machine: One (1) plain paper FAX machine (including toner).

Copy machine: One (1) plain paper copier (including toner) with an automatic document feeder capable accepting multiple size sheets and of sorting 10 stacks.

Printer/scanner/copier: One (1) HP printer/scanner/copier 700 series (or equivalent) including installation software compatible with Windows NT or 2000 and one set of manufacture replacement printing cartridges.

Dry Marker Erase Board: wall mounted adjacent to meeting table, size = 3' x 6' with markers and eraser.

111.3.3 Telephones and Data Circuits:

Three (3) two-line telephones. Four private lines with touch tone service from the local service provider. Two lines are for telephone service with roll over capability for the three telephones and voice mail service from the local service provider. The third line is to be a dedicated line connected to a computer. The fourth line is to be a dedicated line connected to the facsimile machine. Trailer wiring shall include six boxes equipped with RJ-11 jacks (two wire pairs per jack), two in each office and center area.

The computer line shall be a high-speed DSL line and include internet service. When high-speed internet service is available through a cable TV service, it shall be provided for the computer and the corresponding telephone line requirement deleted.

All initial hook up and basic monthly telephone charges, high-speed internet service, basic fax service, and electrical expenses for the Engineer's Office Facility shall be borne by the Contractor. The Contractor will be reimbursed for all long distance charges authorized by the Engineer.

111.4 Payment:

Payment for Type I Engineer Office Facilities or Type II Engineer Office Facilities will be made at the contract lump sum price. Payment shall be made in equal one-third portions. The first payment shall be paid with Contractor's initial billing. The second payment shall be made when the total payments to the Contractor equals one-half of the initial contracted amount. The remaining one-third payment shall be paid as part of the final payment due the Contractor. No additional payment will be made for occupancy and services resulting from contract time extensions.

Payment reduction for incomplete facilities or unsatisfactory maintenance shall be made at a rate of $500 per day for each calendar day the facility remains out of compliance with the requirements of this specification. Payment reduction for incomplete facilities shall commence on the day following the construction notice to proceed date and shall continue until the facilities are brought into compliance with the specifications. Payment reductions will be applied to the next progress payment and taken from the overall contract amount.

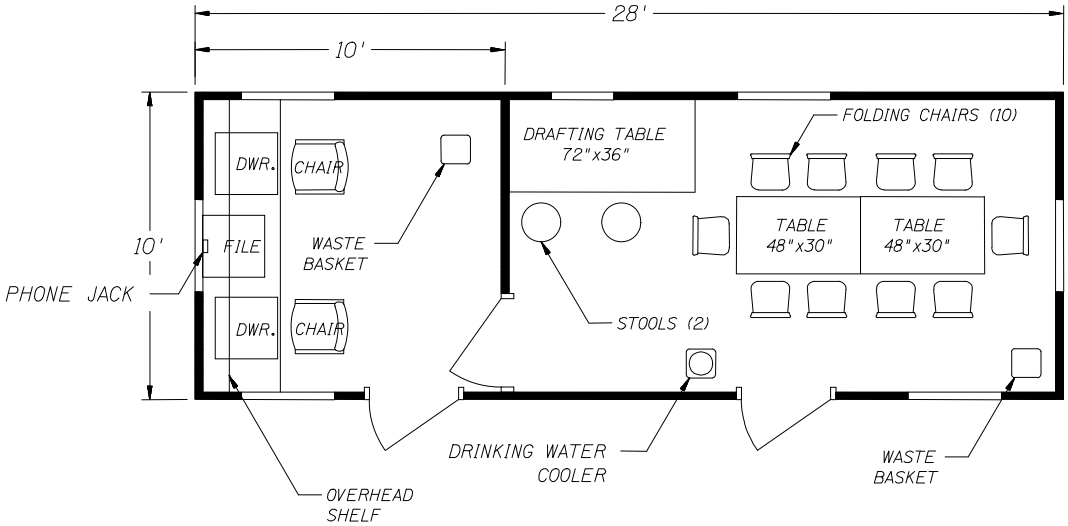

SAMPLE SCHEMATIC

Maricopa Co. Dept. of Transportation	CONSTRUCTION TRAILER (TYPE I)	5-21-03

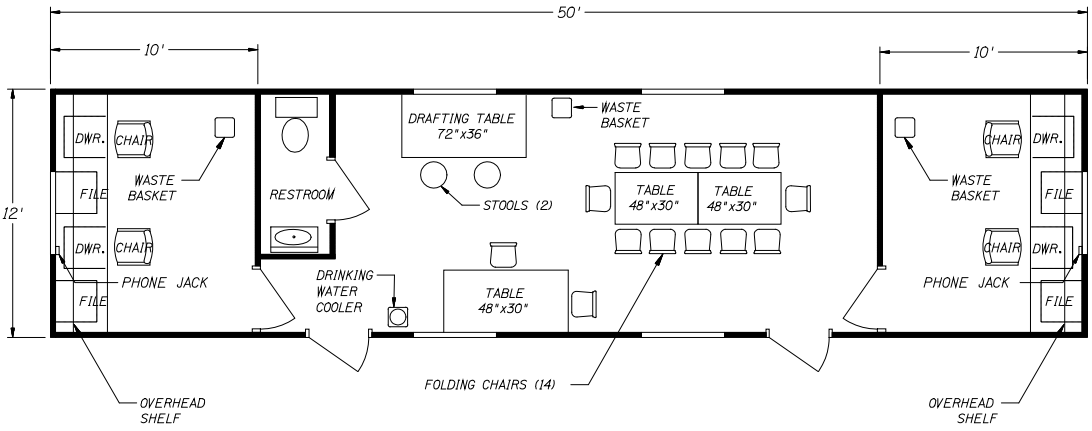

SAMPLE SCHEMATIC

Maricopa Co. Dept. of Transportation	CONSTRUCTION TRAILER (TYPE II)	5-21-03

Part 200 add the following new Section:

SECTION 202

REMOVAL OF STRUCTURES

202.1 DESCRIPTION:

The work under this Section shall consist of the removal, wholly or in part, and satisfactory disposal of all structures within the right-of-way which have not been designated on the project Plans or specified in the Special Provisions to remain, except for those structures which are to be removed and disposed of under other items of work in the contract. The work shall also include salvaging of designated materials and backfilling the resulting cavities.

For structures requiring National Emission Standards for Hazardous Air Pollutants (NESHAP) notification prior to removal, see the Environmental Clearance in the MCDOT Contract Special Provisions Appendix for additional requirements.

Existing structures and other existing improvements which are to become an integral part of the planned improvements shall remain even though not specifically noted.

Materials removed and not designated to be salvaged or incorporated into the work shall become the property of the Contractor.

202.2 BLANK

202.3 CONSTRUCTION:

202.3.1 General: Bridges, culverts, retaining walls, and other structures in use by or facilitating traffic shall not be removed until satisfactory arrangements have been made to accommodate the traffic.

Blasting or other operations necessary for the removal of an existing structure, which may damage new construction, shall be completed prior to commencing the new work.

Items designated to be salvaged shall be carefully stockpiled or stored by the Contractor at locations designated in the Special Provisions or as requested by the Engineer.

Items which are to be salvaged or reused in the new construction, that are damaged or destroyed as a result of the Contractor's operations, shall be repaired or replaced by the Contractor at no additional cost to the County.

Holes, cavities, trenches and depressions resulting from the removal of major structures, except in areas to be excavated, shall be backfilled with suitable material which shall be

compacted to a density of not less than 95 percent of maximum density, as requested and approved by the Engineer.

202.3.2 Removal of Bridges: The removal of existing bridges, either wholly or in part, shall be as shown on the project plans or as described in the Special Provisions. Bridge removal operations shall be conducted in such a manner as to cause the least interference to public traffic.

At least ten days before beginning bridge removal over or adjacent to public traffic or railroad property, the Contractor shall submit to the Engineer details of the removal operations showing the methods and sequence of removal and equipment to be used.

When total bridge removal is specified, all materials designated for salvage, such as structural steel, structural steel members, timber and other reusable materials shall be carefully dismantled, removed and salvaged in accordance with the requirements of Section 202.3.1. Steel members shall be match marked as requested by the Engineer.

Piling, piers, abutments, footings and pedestals shall be removed to at least 1.0 foot below ground line or 5 feet below finished subgrade elevation unless specified otherwise in the Special Provisions or on the project Plans.

When partial bridge removal is specified or alteration of an existing bridge requires removal of portions of the existing structure, such removal shall be performed with sufficient care as to leave the remaining portion of the structure undamaged.

In case of damage to the existing bridge structure, the Contractor shall make necessary repairs at no additional cost to the County. Reinforcing steel extending from the remaining portion of the structure shall be protected, cleaned and incorporated in the new portion of the structure in accordance with the details shown on the project plans or as requested by the Engineer.

Flame cutting and saw cutting may be used for removing, widening, or modifying bridges, provided the Contractor complies with all protection, safety and damage requirements.

Explosives shall not be used in bridge removal operations unless approved by the Engineer.

Before beginning concrete removal operations involving the removal of a portion of a monolithic concrete element, a saw cut a minimum of 1 inch deep shall be made to a true line along the limits of removal on all faces of the element which will be visible in the completed work.

Removed concrete and other debris shall be disposed of as provided in Section 104.1.4.

202.3.3 Removal of Minor Structures and Miscellaneous Structural Concrete: Minor structures and miscellaneous structural concrete shall be defined as all or portions of

minor retaining walls, spillways, drainage structures, concrete box culverts, foundations, footings and all other portland cement concrete construction, except bridges. All existing miscellaneous concrete shall be removed to a depth of at least 5 feet below finished subgrade elevation, unless otherwise specified in the Special Provisions or on the project plans.

Where new concrete is to join existing concrete, the existing concrete shall be saw cut to a true line with straight planar edges free from irregularities.

Concrete removal operations shall be performed without damage to any portion that is to remain in place. All damage to the existing concrete which is to remain in place shall be repaired to a condition equal to that existing concrete damaged by the Contractor's operations shall be at no additional cost to the County.

Existing reinforcement that is to be incorporated in new work shall be protected from damage and shall be thoroughly cleaned of all adhering material before being embedded in new concrete.

Removed concrete and other debris shall be disposed of as provided in Section 104.1.4.

The floors of concrete basements, pits, and structures not required to be removed, and which are located within the roadway, shall be broken in a manner that will prevent the entrapment of water.

202.4 MEASUREMENT:

Removal of structures will be measured on a lump sum basis except when the fee schedule contains specific items under this section on a unit basis, measurement will be made by the units designated in the fee schedule.

202.5 PAYMENT:

Payment for the accepted quantities of removal of structures will be made by lump sum, or by specific removal items, or by a combination of both. Payment for removal of structures and obstructions not listed in the fee schedule, but necessary to perform the construction operations designated on the project plans or specified in the Special Provisions, shall be considered as included in the prices of contract items.

The prices shall include all excavation and subsequent backfill related to the removals, and the salvaging, hauling, storing and disposing of all materials as provided herein.

SECTION 205

ROADWAY EXCAVATION

205.1 DESCRIPTION, replace with the following:

Roadway excavation shall consist of excavating, grading, and hauling all types of materials encountered in constructing roadways, turnouts, driveway entrances, ditches within the roadway prism, and other areas as designated on the plans or specified in the Special Provisions.

Roadway excavation shall also include the placement and compaction of excavated material in embankments as provided under Section 211 FILL CONSTRUCTION.

205.2 UNSUITABLE MATERIAL, replace the third paragraph with the following:

The removal and disposal of unsuitable material will be paid for in accordance with Section 109.5 ACTUAL COST WORK.

205.7 MEASUREMENT, replace the first paragraph with the following:

The following earthwork operations are included in Roadway Excavation for the quantities of material involved.

205.7 MEASUREMENT, replace the third paragraph with the following:

The bidding schedule quantities for roadway excavation will be considered to be the final quantity for payment, unless adjustments are made in accordance with Section 216. When adjustments are required, roadway excavation will be measured by the cubic yard in the original space occupied and the volume of material removed will be computed in cubic yards by the average end area method or other acceptable methods as determined by the Engineer.

205.08 PAYMENT, replace the first paragraph with the following:

The quantities of roadway excavation as shown in the bidding schedule and any adjustments as specified in Section 216, will be paid for at the contract unit price per cubic yard. Such price shall be full compensation for the work complete, in place, including excavation, sloping, slope shaping and rounding, blasting, loading, hauling, stockpiling, placing and compacting embankments, disposal of surplus material, and all other incidental work in accordance with the requirements of these specifications.

SECTION 206

STRUCTURE EXCAVATION AND BACKFILL

206.5.1 MEASUREMENT, add the following:

The bidding schedule quantities for Structure Excavation and Backfill will be considered to be the final quantity for payment unless adjustments are made in accordance with Section 216. When adjustments are required, Structure Excavation and Backfill will be calculated by the cubic yard in the final space occupied and volume of material placed will be computed in cubic yards by the average end area method or other acceptable methods as determined by the Engineer.

206.5.2 PAYMENT, add the following:

The removal and disposal of boulders and unsuitable material and replacement with suitable material to the design lines will be paid for in accordance with Section 109.5 ACTUAL COST WORK.

SECTION 210

BORROW EXCAVATION

210.4 MEASURMENT, replace with the following:

The bidding schedule quantities for Borrow (In Place) will be considered to be the final quantity for payment unless adjustments are made in accordance with Section 216. When adjustments are required, Borrow (In Place) will be calculated by the cubic yard in the final space occupied and volume of material placed will be computed in cubic yards by the average end area method or other acceptable methods as determined by the Engineer.

No measurement for payment will be made for borrow material placed prior to completion of roadway excavation, drainage excavation, channel excavation or structural excavation, when such placement results in unauthorized wasting of roadway, drainage or structural excavation materials.

210.5 PAYMENT, replace with the following:

The quantities of Borrow (In Place) as shown in the bidding schedule and adjustments to same as described in Section 216, will be paid for at the contract unit price per cubic yard. The price shall be full compensation for the item complete in place, including furnishing, hauling, placing and compacting the material, and applying water.

SECTION 211

FILL CONSTRUCTION

211.5 MEASUREMENT, replace with the following:

Fill construction quantities will not be measured separately.

211.6 PAYMENT, replace with the following:

No direct payment will be made for Fill Construction. Payment for all such work is included in the payment made for Roadway Excavation, Borrow Excavation, Channel Excavation and Structural Excavation.

Part 200 add the following new Section:

SECTION 212

ROADWAY OBLITERATION

212.1 DESCRIPTION:

Roadway obliteration shall consist of removing abandoned roadway elements and grading the area to blend in with the surrounding terrain. In undeveloped areas the grading is to restore the natural contours.

212.2 CONSTRUCTION:

The Contractor shall remove existing pavement and base materials. The Contractor shall dispose of materials in fill areas or as approved by the Engineer. Grading and shaping operations shall consist of excavating prior filled areas and the placing of fill material as needed for terrain restoration. The roadway's native subgrade shall be scarified prior to placement of any fill. Fill material in excess of project construction requirements shall be placed in the area of the old roadway and shaped to blend with natural contours according to the obliteration detail or specified grades, to the satisfaction of the Engineer. Compaction of fill in the restored areas shall range between 85% and 90% when tested with methods defined in section 211.4. Care shall be taken to ensure proper drainage. The area shall be seeded in accordance with Section 430 Landscaping and Planting.

212.3 MEASUREMENT:

Measurement of Roadway Obliteration will be the square yards of pavement designated to be removed within roadway obliteration limits.

212.4 PAYMENT:
Payment for Roadway Obliteration will be at the contract unit price. Payment shall be full compensation for removal of all asphalt pavement and base materials together with the grading and shaping operations, complete in place.

Part 200 add the following new Section:

SECTION 213

DEWATERING

213.1 DESCRIPTION:

The work under this Section consists of furnishing all necessary labor and materials, installing and maintaining all necessary pumps, piping and other equipment for removing water from various locations, and maintaining excavations free of water as required for construction.

213.2 AUTHORIZATION:

If high groundwater levels are encountered, the Engineer will determine whether to implement:

a) Dewatering, as specified herein, or
b) Demobilization and remobilization, with a contract time extension in accordance with Section 108.7 of the Specifications.

213.3 CONSTRUCTION:

213.3.1 General Excavation: Prior to starting any work on removal of water from excavations, the Contractor shall have an approved Groundwater and Surface Water Handling Plan. The Plan shall include the Contractor's proposed method of removing water from excavations. The Plan may be placed into operation upon approval of the Engineer, but nothing in this section will relieve the Contractor from full responsibility for the adequacy of the water control.

Contractor shall furnish to the Engineer one set of dewatering calculations as part of the dewatering plan. These calculations shall include determination of well spacing, header sizing, pump selection, pump rating curves, typical well point cross-sections and depth of screened section. They shall include sketches and figures of sufficient detail to illustrate the layout of the dewatering system for the different portions or phases of the dewatering for the work areas. The Contractor shall furnish a listing of all equipment, including model numbers, vendors and suppliers, and catalogue cuts.

The dewatering calculations shall be prepared by a Professional Engineer or Professional Geologist.

The Contractor's Plan shall conform to all local, state and federal requirements. Any groundwater, stormwater or surface water encountered during construction shall be disposed of in such a manner that will not cause damage to public or private property or constitute a nuisance or menace to the public.

213.3.2 Soil-Cement Construction: Where excavation for the soil-cement construction extends below the water table, the portions below the water table shall be dewatered in advance of excavation. The dewatering shall be accomplished in a manner that will prevent the loss of fines, maintain stability of the slopes and bottom of the excavation, and result in construction operations being performed under reasonably dry conditions.

During placement and compaction of the concrete, the water level at every point of the excavation shall be maintained a minimum of three (3) feet below the placement level until the soil-cement has been in place a minimum of 48 hours.

213.4 PAYMENT:

Payment for Dewatering or demobilization and remobilization will be based upon approved time and material invoices, in accordance with Section 109.5 in an amount not to exceed the ALLOWANCE shown in the fee Schedule under Item DEWATERING, for approved work performed for the project.

SECTION 215

EARTHWORK FOR OPEN CHANNELS

215.7 MEASUREMENT, replace the second paragraph with the following:

The bidding schedule quantities for Channel Excavation will be considered to be the final quantity for payment unless adjustments are made in accordance with Section 216. When adjustments are required, earthwork for open channels will be measured by the cubic yard in the original space occupied and the volume of material removed will be computed in cubic yards by the average end area method or other acceptable methods as determined by the Engineer.

215.8 PAYMENT, add the following:

The removal and disposal of boulders and unsuitable material and replacement with suitable material to the design lines will be paid for in accordance with Section 109.5 ACTUAL COST WORK.

Part 200 add the following new Section:

SECTION 216

EARTHWORK ADJUSTMENTS

Adjustments in the bidding schedule quantities for roadway excavation, drainage excavation, channel excavation, or borrow (in place) may be initiated by the contractor or the Engineer if evidence indicates that the required quantity varies by an amount greater than five percent of the bidding schedule quantity. The contractor shall advise the Engineer in writing submitting evidence in the form of a construction survey or photogrammetric survey with measurement for the proposed adjustment substantiated

in accordance with Sections 205.7, 210.4 or 215.7 and requesting an adjustment in quantities. The Engineer will determine the amount of adjustment, if any. The quantity upon which payment will be based will be the bidding schedule quantity plus or minus only that portion of the adjustment that exceeds five percent of the bidding schedule quantity.

Should the item of earthwork to be adjusted also be a major item per Table 109-1, as specified in Subsection 109.4.1, the determination as to whether the unit price may be adjusted will be based on the difference between the final quantity and the bid schedule quantity plus or minus the five percent tolerance.

Neither variations in shrink or swell of material from those shown on the plans, nor variations of shrink or swell from contractor obtained sources will be reason for establishing a quantity adjustment.

Adjustments in earthwork quantities due to revisions ordered by the Engineer will be isolated by measurement or calculations in accordance with the requirements of Subsections 205.7, 210.4 or 215.7. The bidding schedule quantities will be adjusted by the amount of the ordered change and will not be included in any other adjustment of the bidding schedule quantities as specified in this Section.

Part 200 add the following new Section:

SECTION 222

CEMENT STABILIZED ALLUVIUM BANK PROTECTION

222.1 DESCRIPTION:

The work under this section consists of constructing cement stabilized alluvium (CSA) bank protection at the locations shown on the plans and in accordance with these specifications, including excavating, backfilling and grading the river bed and banks to the lines, grades and cross sections shown on the plans or established by the Engineer; furnishing, processing and mixing aggregate, cement, fly ash and water; spreading and compacting the mixture; and placement of curing seal.

222.2 MATERIALS:

222.2.1 Aggregate shall be clean, sound, durable, uniform in quality and free of any soft, friable material, organic matter, oil, alkali or other deleterious substances. Aggregate shall conform to the following requirements.

Aggregate Size	Percent Passing
3 inch	100
No. 4	30-65
No. 200	0-8

Sampling and sieve analysis shall be performed in accordance with ASTM D75 and ASTM C136.

The plasticity index shall be no greater than 10 in accordance with the requirements of AASHTO T-90. Clay lumps larger than one inch shall be screened out of the raw soil prior to mixing.

Before placing aggregates upon the stockpile site, the site shall be cleared of vegetation, trees, stumps, brush, rocks and other debris, and the ground leveled to a smooth, firm, uniform surface.

Stockpiles shall be constructed upon prepared sites. The piles when completed shall be neat and regular in shape. The stockpile height shall be limited to a maximum of 13 feet.

Stockpiles in excess of 200 cubic yards shall be built up in layers not more than 4 feet in depth. Stockpile layers shall be constructed by trucks, “clamshells”, or other methods approved by the Engineer. Pushing aggregates into a pile by a bulldozer will not be permitted. Each layer shall be completed over the entire layer of the pile before depositing aggregates in the next layer.

The aggregate shall not be dumped so that any part of it runs down and over the lower layers in the stockpile. The method of dropping from a bucket or spout in one location so as to form a cone shaped pile will not be permitted. Any method of placing aggregates in stockpiles, which, in the opinion of the Engineer, segregates, breaks, degrades or otherwise damages the aggregates will not be permitted.

Only pneumatic tired equipment shall be used on the processed or manufactured aggregates in constructing the stockpiles. When removing materials from the face of the stockpile, the equipment shall be operated in such a manner as to face-load from the floor to the top of the stockpile to obtain maximum homogeneity of materials.

Stockpiles shall not be constructed where traffic, vehicles or Contractor’s equipment will either run over or through the stockpile, or cause foreign matter to be mixed with the aggregates.

222.2.2 Cement shall conform to the requirements for low alkali, Type II Portland Cement of Section 725.2.

222.2.3 Fly ash shall conform to the requirements of Section 725.2.1 for pozzolonic materials.

222.2.4 Water used for mixing shall be potable and free from oil, vegetable matter and any other deleterious matter; and shall conform to Section 725.4.

222.2.5 CSA shall have a minimum compressive strength of 0.75 ksi at seven days, determined in accordance with the requirements of Arizona Test Method 241 (Modification of AASHTO T-134). At least one test (two cylinders) shall be made for each 1,300 cubic yards of CSA placed.

222.2.6 Bedding Mortar shall consist of broomable, high portland cement/fly ash content, heavily sanded mortar, with a compressive strength of 2.9 ksi at 28 days, and shall have a slump of approximately 8.0 to 9.0 inches. The sand (fine aggregate) shall satisfy Sections 701.3, 776.3 and the following gradation:

Aggregate Size	Percent Passing
3/8 inch	100
No. 4	95-100
No. 16	45-80
No. 50	0-30
No. 140	0-10
No. 200	0-4

222.2.7 Exterior Concrete shall be Class B, conforming to Section 725.1.

222.2.8 Forms shall be mortar tight and designed, constructed, braced and maintained so that the finished concrete will be true to line and elevation; and will conform to the required dimensions and contours. They shall be designed to withstand the pressure of concrete, use of set-retarding admixtures or pozzolonic materials in the concrete, effects of vibration as the concrete is being placed and all loads related to the construction operations, without distortion or displacement.

All forms shall be treated with an approved release agent before concrete is placed. Any material that will adhere to or discolor the concrete shall not be used.

222.3 CONSTRUCTION:

222.3.1 Mix Design: Contractor shall determine the mix proportions of the aggregate, cement, fly ash and water; and shall furnish CSA conforming to the requirements specified herein. The job-mix design with supporting test results shall be submitted to the Engineer for review. The Engineers approval shall be obtained prior to incorporating any material into the work.

The mix design objective is to provide the minimum cement plus fly ash content (C+P), W/C ratio and mix proportions to meet the specified strength, plus 2% additional cementitious materials (same C+P content) for durability and material variations. At the same time, the mix shall be dry (stiff) enough to support heavy placement and compaction equipment, yet wet enough to permit effective consolidation by adequate distribution of

the paste binder throughout the CSA mass, during the mixing and placing process. The C+P content during CSA production shall not be decreased nor increased from that of the approved job-mix design unless approved by the Engineer. Actual mix designs, used on this project, shall be determined from the Contractor's laboratory tests from material stockpiled after construction of the stockpiles is completed.

The mix design shall be performed in accordance with Arizona Test Method 220 (Determination of Cement Content Required for Cement Treated Mixtures, a modification of AASHTO T-144) to determine the cementitious (C+P) content necessary for the strength required for CSA.

Determination of the optimum moisture content for compaction of the CSA mixture, including the additional 2% cementitious material for durability, shall be in accordance with AASHTO T-134, Method B. The additional 2% cementitious materials shall be a mixture of cement and fly ash in the same proportions as used in the mix design to meet the strength requirement. The total weight of cement replaced by fly ash shall not exceed 15%.

The Contractor shall follow the general provisions in accordance with Arizona Test Method 220 and AASHTO T-99, Method D, with the following exceptions.

The AASHTO T-99, Method D, shall be used in determining maximum dry density, modified to the extent that a rock correction will be calculated to correct for aggregate passing the 3.0-inch and retained on the 5/8 inch sieves. No correction will be used in determining the optimum moisture content.

Included in the job-mix design data shall be the grade of cement, brand of fly ash, and source of aggregate. A new mix design shall be submitted for approval at least two weeks prior to use, any time the Contractor requests a change in materials or proportioning of the materials from that given in the approved mix design.

222.3.2 Preparation of Subgrade: CSA shall be placed on a prepared subgrade shaped to the lines and grades shown on the plans, or be placed on existing CSA. The subgrade shall be compacted to a minimum of 95% of the maximum density in accordance with Section 301.3. When the embankment material is composed predominately of rock such that these compaction procedures will not achieve the required density, the Engineer will determine the amount of compaction required and the adequacy of equipment used to obtain the required compaction.

Immediately prior to placement of the CSA, the subgrade shall be uniformly moistened and maintained in an acceptable condition throughout the placement operation. Soft or yielding subgrade shall be corrected and made stable before construction proceeds. Saturated or submerged subgrade shall remain dewatered a minimum of 48 hours after placement of the CSA.

When CSA is to rest on rock, the rock shall be fully uncovered. The surface of the rock shall be removed to a depth sufficient to expose sound rock. Bedrock shall be roughly leveled or cut to approximate horizontal and vertical steps. Seams in the rock shall be grouted where determined by the Engineer.

When placed on existing CSA, the surface receiving the new CSA shall be cleaned to the satisfaction of the Engineer in the following manner:

After exposing the CSA structure, the surface shall be thoroughly cleaned of all loose materials foreign to the CSA. The surface shall be cleaned by sand-blast or hydro-blast (2.0 ksi maximum) to remove all foreign or loosened particles and hand scaled, if necessary, to provide a clean rough surface, free of loose materials, satisfactory to the Engineer.

The old CSA surface shall be moist at the time of placement and a ¼ inch layer of broomable bedding mortar (2.9 ksi) shall be used between the old and new CSA. A set retarding admixture shall be used in the mortar during hot weather placement.

222.3.3 Mixing, General Requirements: Aggregate, fly ash and cement shall be proportioned and mixed in a central mixing plant, unless otherwise permitted by the Engineer. The plant shall be either the batch mixing type (using revolving blade or rotary drum), or the continuous mixing type. The aggregate fly ash and cement shall be proportioned by weight. Certification for each shipment of cement or fly ash shall be provided to the Engineer.

The fly ash and cement shall be added in such a manner so that they are uniformly distributed throughout the mixing operation.

There shall be safe, convenient facilities for sampling the cement and fly ash in the supply line to the weight hopper or pugmill. The charge in the batch mixer or continuous mixer shall not exceed that which will permit complete mixing of the materials.

The water shall be proportioned by weight or volume and there shall be some means to enable the Engineer to verify the amount of water in each batch or the rate of water flow for continuous mixing. The time of the addition of water or the points where it is introduced into the mixer shall be as approved by the Engineer.

Control of water content in the field shall be accomplished in two ways:

> **(1)** The moisture-density relationship for the CSA shall be determined in accordance with AASHTO T-134, Method B, on a routine basis, or when any significant shift in the gradation or rock content occurs.
>
> **(2)** The actual moisture content of the mixture at the time of compaction, or shortly thereafter, shall be determined in accordance with ASTM D2216 (oven dry) or

AASHTO T 310 (nuclear method), to determine if the optimum moisture content as determined by AASHTO T 134, Method B, is being maintained.

Water content in the aggregates is to be continuously monitored and the mixing water shall be adjusted as necessary to maintain proper moisture.

222.3.4 Batch Mixing: The mixer shall be equipped with a sufficient number of paddles of a type and arrangement to produce a uniformly mixed batch. The mixer shall be equipped with a timing device which will indicate, by a definite audible or visual signal, the expiration of the mixing period. The device shall be accurate to within two seconds. The time of mixing shall begin after all the ingredients are in the mixer and shall end when the mixer is half emptied. The allowable tolerance for weight batching of aggregates and cementitious material will be 2.0% and 0.5%, respectively, for each batch.

The batch mixing plant shall provide sampling facilities that are satisfactory to the Engineer and which will allow representative samples of the CSA to be obtained easily and safely.

222.3.5 Continuous Mixing: A control system shall be provided that will automatically close down the plant when the material in any storage facility approaches the strike-off capacity of the feed gate. The plant will not be permitted to operate unless this automatic control system is in good working condition.

The feeder for the aggregate shall be mechanically or electrically driven.

Aggregate shall be drawn from the stockpile by a feeder or feeders that will continuously supply the correct amount of aggregate.

The cement/fly ash and aggregate feeders shall be equipped with devices that can accurately determine the rate of feed while the plant is in full operation.

Continuous mix plants shall provide sampling facilities which are satisfactory to the Engineer, and that allow representative samples of the aggregate and CSA mixture to be obtained easily and safely.

222.3.6 Transporting/Spreading: Mixed materials shall be transported from the plant to the construction site in vehicles and spread on the prepared subgrade or previously completed CSA. Spreading shall be accomplished by the use of approved motor graders or crawler type equipment. The compacted lifts of CSA shall not exceed 8.0 inch or be less than 4.0 inch in thickness.

Aggregate shall not be mixed or placed when the air temperature is below 45º F in the shade, unless the air temperature is at least 45º F in the next 24 hours. CSA shall not be mixed or placed when the air temperature is greater than 109º F in the shade.

222.3.7 Compacting/Finishing: All completed CSA surfaces that will be covered with succeeding layers of CSA shall be kept continuously moist by fog spraying until placement of next lift.

CSA shall be uniformly compacted to a minimum of 98%, with an average of 100%, of maximum density as monitored by nuclear density tests in accordance with AASHTO T 238 and T 310. Maximum density shall be determined in the lab in accordance with the requirements of AASHTO T 99, Method D, for minus 0.75 inch material only, with rock correction at each density test location according to AASHTO T 224, Section 2.2.2. At least one density test shall be taken for each 460 cubic yards of CSA.

At the start of compaction of each lift, the mixture shall be in uniform, loose condition throughout its full depth. The moisture content shall be as previously specified herein. No section shall be left undisturbed for longer than thirty minutes during compaction operations. Compaction of each lift shall be accomplished in such a manner as to produce a dense surface, free of compaction planes, and shall be completed within one (1) hour from the time water is added to the mixture. After compaction, CSA shall be shaped to the required grades, cross sections and rolled to a reasonably smooth surface. Whenever the Contractor's operation is interrupted for more than two hours, the top surface of the completed layer, if smooth, shall be scarified to a depth of at least 1 inch with a spike-tooth instrument prior to placement of the next lift. The surface, after scarifying, shall be swept using a power broom or other method approved by the Engineer, to completely free the surface of all loose material prior to the placement of the next lift.

At the time of compaction, the moisture content shall not be more than one percent (1%) below optimum and shall not be more than one percent (1%) above optimum when the mean air temperature during construction hours does not exceed 90º F.

When the mean air temperature does exceed 90º F, or there is a breeze or wind which promotes rapid drying of the CSA mixture, the moisture content shall be increased as needed, at the direction of the Engineer, but shall be less than the amount that will cause the CSA to become unstable during compaction and finishing operations.

Backfill shall not be placed within 40 inches of the top of the CSA surface. Construction joints shall be provided at the end of each day's work or when work is halted for two hours or more. The joints shall be trimmed to a straight line and vertical to the full depth of the lift. Before resuming placement of new material, the joints shall be roughened and loose material removed by power broom or compressed air.

Compaction equipment shall be capable of obtaining specified requirements without detrimentally affecting the compacted material. The equipment shall be modern, efficient compacting units approved by the Engineer. The units shall be of a type that is capable of compacting each lift of material as specified, and meet the minimum requirements as contained herein:

Self-propelled drum drive vibratory roller shall be of a type that will transmit dynamic impact to the surface to be compacted through a steel drum by means of revolving weights, eccentric shaft or other methods. The compactor shall have a gross mass of not less than 23,000 lbs. and shall produce a dynamic force of at least 13 lbs. per inch of drum width when operated at 2,400 cycles per minute (cpm). The dynamic force is defined as the force developed by revolving the eccentric weight at 2,400 cpm. The roller shall have a smooth drum or drums and the drum diameter shall be between 48 inches and 70 inches, and the width shall be between 28 inches and 100 inches. The frequency of vibration during operation shall be 2,400 cpm. The roller shall be operated at speeds not to exceed 15 mph in the forward direction. The engine driving the eccentric mass shall have a rating of not less than 90 kilowatts. Variation in speed, frequency and method of operation will be determined when found necessary to secure maximum compaction of materials.

Heavier compacting units may be required to achieve the required density.

222.3.8 Bedding Mortar: Bedding Mortar shall be used between CSA that has been in place more than seven (7) days and the new CSA after the existing CSA has been properly cleaned. The bedding mortar is to be used for achieving bond between the old and new CSA layers and to eliminate and prevent segregation or voids along the margins of CSA placements. Adjustment to the mix design may be required by the Engineer.

222.3.9 Control Strips: A control strip shall be constructed at the beginning of work on the CSA to be compacted. The control strip construction will be required to establish procedures necessary to obtain densities for the specific course plus use of portable nuclear moisture/density testing equipment to determine in-place densities.

Each control strip, constructed to acceptable density and surface tolerances shall remain in place and become a section of the completed CSA. Unacceptable control strips shall be corrected or removed and replaced at the Contractor's expense. A control strip shall cover an area of approximately 420 square yards and be of the same dimensions specified for the CSA course.

The materials used in construction of the control strip shall conform to the specification requirements. They shall be furnished from the same source and be of the same type as used in the CSA. The underlying surface for the control strip shall have prior approval of the Engineer.

The equipment used in the control strip shall be of the same type and weight as used for the CSA.

Compaction of control strips shall start immediately after the course has been placed to the specified thickness, and shall be continuous and uniform over the entire surface. Compaction of the strip shall continue until no discernible increase in density can be obtained by additional effort.

Upon completion of compaction, the mean density of the control strip will be determined by averaging the results of ten density tests taken at random sites within the strip. If the mean density of the control strip is less than 98% of the laboratory compacted specimens as determined by testing procedures appropriate for the material being placed, the Engineer may order the construction of another control strip.

A new control strip may be ordered by the Engineer, or requested by the Contractor when:

(1) A change in material or mix design.
(2) There is reason to believe that the control strip density is not representative for the material being placed.
(3) Ten days of production have passed without a new control strip.

222.3.10 Power Tampers and Small Vibratory Rollers: Small vibratory rollers that are capable of operating within a few millimeters of a vertical face shall be used for compaction adjacent to guide banks, next to utilities and drainage conduit, at transitions to previously constructed levee protection and at other areas where larger vibratory rollers cannot maneuver. The dynamic force produced by the small vibratory rollers shall be at least 140 lbs. per inch of drum width.
Tampers shall be a type capable of developing a force per blow of at least 1390 lbs. The amount of rolling and tamping required shall be whatever is necessary for the particular equipment to provide the same degree of compaction as would be obtained by four passes of the large self-propelled vibratory roller. Standby replacement equipment shall be available within one hour if needed.

222.3.11 Curing: Temporarily exposed surfaces shall be kept continuously moist. Care must be exercised to ensure that no curing material other than water is applied to the surface that will be in contact with succeeding layers.

Permanently exposed surfaces shall be kept in a moist condition for seven days, or they may be covered with bituminous or other suitable curing material, subject to the Engineer's approval. Any damage to the protective covering within the seven days shall be repaired to the satisfaction of the Engineer.

Regardless of the curing material used, any permanently exposed surface shall be kept moist until the protective cover is applied. This protective cover is to be applied as soon as practical, with a maximum time limit of twenty-four hours between the finishing of the surface and the application of the protective cover.

222.3.12 Maintenance: The Contractor will be required, within the limits of the contract, to maintain the CSA and curing seal in good condition until the work is completed and accepted. Maintenance shall include repairs to any defects that may occur. This work will be done at the Contractor's expense and repeated as often as necessary. Faulty work shall be replaced for the full depth of the layer.

222.4 MEASUREMENT:

The work will be measured by the cubic yard of completed CSA bank protection constructed to the lines, grades and cross-sections shown on the plans.

The maximum limit for the placement of CSA due to over excavation or sloughing of existing soils shall be 4 inches. Any placement beyond these limits will not be included in the pay quantity.

222.5 PAYMENT:

The accepted quantities of CSA will be paid for at the contract price per cubic yard for CSA Bank Protection, subject to the following penalties for failure to achieve the required strength requirements:

Percent of Specified Strength	Percent of Contract Unit Price
≥100	100
97-99	92
94-96	85
90-94	77
85-89	68
80-84	60
75-79	50
<75	See Note

Note: Material represented by lots attaining seven day compressive strengths with a mean value less than 75% of the specified compressive strength will be evaluated as to acceptance. The Engineer will determine if the material can be left in place or removed and replaced at the Contractor's expense.

SECTION 310

PLACEMENT AND CONSTRUCTION OF AGGREGATE BASE COURSE

310.5 PAYMENT, add the following:

The Contractor shall furnish the Engineer certified weight tickets for the aggregate base (AB) placed on the project. Final pay quantities for aggregate base will be based upon the scale tickets submitted to the Engineer for aggregate base specifically used to construct the roadway untreated base to the limits as shown in the contract documents.

SECTION 317

ASPHALT MILLING

317.2 CONSTRUCTION REQUIREMENTS, add the following:

Asphalt milling adjacent to valley gutters or curb and gutter shall include removal and disposal of built-up asphalt concrete, slurry seal, microsurfacing and similar materials from adjacent concrete valley gutters or concrete gutter pans.

317.3 MEASUREMENT AND PAYMENT, add the following:

Removal and disposal of built-up materials from adjacent portland cement concrete surfaces shall not be measured; the associated cost shall be included in the contract unit price for Asphalt Milling.

SECTION 321

PLACEMENT AND CONSTRUCTION OF ASPHALT CONCRETE PAVEMENT

321.8.2 Joints, add the following:

Longitudinal joints shall be located to maintain a minimum 6 inch clear distance from the edge of any proposed longitudinal pavement stripe.

321.8.6 Asphalt Concrete Overlay, replace paragraphs (a) and (b) with the following:

(a) Areas designated for pavement repair or surface replacement by the contract documents (which may include localized pavement failures, severely raveled areas, severely cracked areas, over-asphalted areas, and other defects) shall be cut out and replaced. Pavement repairs and surface replacements shall be completed and approved before placing asphalt concrete overlay.

(b) Before placing asphalt concrete overlay, thermoplastic pavement markings and raised pavement markers shall be removed and milling shall be completed. Milling shall be as shown on the plans or specified in the special provisions in accordance with Section 317.

321.10.1 Acceptance Criteria, replace the third sentence with the following:

When the quantity of asphalt concrete placed in a day exceeds 1000 tons but is less than 2000 tons, the day's production will be divided into two (2) approximately equal sublots. Where the quantity of asphalt concrete placed in a day exceeds 2000 tons, the day's production will be divided into three (3) approximately equal sublots. A minimum of one sample will be obtained from each lot.

321.13 PAYMENT, add the following:

Payment for removal of thermoplastic markings and raised pavement markers prior to roadway overlay operations will be as specified in Section 460.

Payment for asphalt pavement replacement and asphalt pavement repair required prior to roadway overlay operations will be as specified in Section 336.

SECTION 325

PLACEMENT AND CONSTRUCTION OF ASPHALT-RUBBER ASPHALT CONCRETE

325.7 PLACEMENT:

325.7.2 Placing and Construction Methods, add the following:

Longitudinal joints shall be located to maintain a minimum 6 inch clear distance from the edge of any proposed longitudinal pavement stripe.

325.7.3 Compaction:

Delete the phrase “any desired” from the first sentence.

325.7.5 Adjustments, add the following:

When the Engineer determines an insufficient amount of material is available for shoulder adjustment, the Engineer may require the Contractor to provide additional material.

325.8 QUALITY CONTROL, add the following:

Requests for an Engineering Analysis or Referee Testing as described in 325.9.4 and 325.10 will not be considered unless based on quality control test results by an AMRL and CCRL accredited laboratory using properly certified technicians in accordance with ASTM D3666, Section 7 (Personnel Qualifications).

325.9 ACCEPTANCE:

325.9.1 Acceptance Criteria, replace the third sentence with the following:

When the quantity of ARAC placed in a day does not exceed 1000 tons, the day’s total production shall be considered as a single sublot. When the quantity of ARAC placed in a day exceeds 1000 tons but is less than 2000 tons, the day’s production shall be divided into two (2) approximately equal sublots. Where the quantity of ARAC placed in a day exceeds 2000 tons, the day’s production shall be divided into three (3) approximately equal sublots.

325.9.2 Gradation and Binder Content, replace the first paragraph with the following:

Acceptance testing for gradation and binder content will be performed in accordance with section 325.9.2.2 End Product Sampling and Testing.

325.9.2.2.1 Mineral Aggregate Gradation and Binder Content, add the following:

The Engineer may run tests to determine the correction factor to be used with AASHTO test procedure T 308. When requested by the Engineer, the contractor shall provide calibration materials to the Engineer.

325.9.5 Density:

325.9.5.2 Compaction Procedures:

325.9.5.2.1 Pavement Lift Thickness 1½ Inches or Less, add the following: Pavement coring shall be incompliance with Section 321.14 ASPHALT CORE METHOD. Assessment of penalties for deficient ARAC thickness shall be in accordance with Table 325-5.

325.9.5.2.2 Pavement Lift Thickness Greater than 1½ Inches, add the following: Pavement coring shall be incompliance with Section 321.14 ASPHALT CORE METHOD. Assessment of penalties for deficient ARAC thickness shall be in accordance with Table 325-5.

TABLE 325-5	
ARAC PAVEMENT THICKNESS PAYMENT REDUCTION **For Thickness deficiency of more than 0.25 inches and less than 0.50 inches.**	
Total Specified ARAC Pavement Thickness	Reduction in ARAC Payment
Less than 1.50 Inches	50%
1.50 Inches to 1.99 Inches	33%
2.00 Inches to 2.49 Inches	25%
For thickness deficiency of 0.50 inches or greater “Removal or EA” is required.	

325.9.6 Engineering Analysis (EA), replace Table 325-4 with the following:

TABLE 325-4		
ENGINEERING ANALYSIS PENALTIES for REMOVAL* LOTS/SUBLOTS LEFT IN-PLACE		
Acceptance Criteria	Acceptance Limits	Penalty When Contracting Agency is the Owner ($/Ton)
Asphalt-Rubber Binder Content	Over 0.2% points from that Permitted	$9.00
Laboratory Air Voids (Measured at 75 blows)	Deviation from Target Greater Than ± 4.0%	$7.50

325.12 PAYMENT, add the following

Payment for removal of thermoplastic markings and raised pavement markers will be as specified in Section 460.

Payment for asphalt pavement replacement and asphalt pavement repair will be as specified in Section 336.

SECTION 327

HOT IN PLACE RECYCLING

327.3 Equipment- Heating Unit: Add the following:

The heating and pre-heating units should be the type of flat flame radiant heating system. The heating unit should not generate downward flame to contact the pavement directly. The heating hood is insulated with a high-heat resistant ceramic fiber refractory blanket, which is held in place by high-heat resistant studs and wire meshes.

SECTION 329

TACK COAT

329.1 DESCRIPTION, add the following:

Emulsified asphalt for tack coat shall be grade SS-1h.

SECTION 333

FOG SEAL COATS

333.1 DESCRIPTION, add the following:

Fog seal coats for curing seal purposes as specified in Section 308 or Section 309 shall consist of the application of emulsified asphalt.

333.6 APPLICATION OF ASPHALT EMULSION, add the following:

For curing seal applications over Lime Slurry Stabilization or Lime Slurry with Fly Ash Stabilization the application rate shall be between 0.10 to 0.20 gallons per square yard.

SECTION 336

PAVEMENT MATCHING AND SURFACE REPLACEMENT

336.2 MATERIALS AND CONSTRUCTION METHODS

336.2.3 Temporary Pavement Replacement, add the following:

Temporary pavement replacement that uses cold-mix asphalt concrete shall be replaced no later than seven (7) calendar days after initial placement.

336.2.4 Permanent Pavement Replacement and Adjustments, add the following:

336.2.4.3 Pavement Repair: Areas designated for pavement repair are suspected subgrade failure areas within asphalt pavement. Pavement repair consist of removal of the existing pavement structural section (asphalt pavement and the underlying aggregate base), exposing and then removal of subgrade material to a depth of eight inches (8”), backfill and compact subgrade and aggregate base materials to depths as directed by the Engineer, and replacement of the asphalt pavement. The Engineer may revise the removal boundary limits at any time during this work. The Engineer shall be notified and given the opportunity to inspect the soil conditions when the subgrade is exposed prior to excavating subgrade material and again at the completion of subgrade excavation.

After approval of the excavation by the Engineer, the Contractor shall proceed with placement of subgrade and aggregate base materials to elevations directed by the Engineer. Compaction of subgrade and aggregate base shall comply with requirements of Table 601-2. The aggregate base material placed shall be compliant with section 702 requirements; the removed aggregate base may or may not be compliant. After placement of the aggregate base course to the bottom of the adjacent pavement, sawcut and remove asphalt pavement to one foot back of the newly placed aggregate base and then construct new asphalt pavement matching the adjacent existing grades and slopes. Asphalt pavement shall be constructed in accordance with the Section 336.2.4.1 Permanent Asphalt Pavement Replacement, except application of a seal coat is not required.

336.3 TYPES AND LOCATIONS OF TRENCH SURFACE REPLACEMENT, add the following:

Type B trench repair is not approved for use within County right of way.

336.5 PAYMENT, add the following:

Payment for asphalt pavement repair shall be full compensation for all labor, equipment, and materials required for the complete in place repair including but not limited to pavement removal, excavation, aggregate base coarse placement, and asphalt pavement replacement.

SECTION 337

CRACK SEALING

Replace **SECTION 337 CRACK SEALING** with the following:

SECTION 337 CRACK SEALING AND FILLING

337.1 DESCRIPTION:

This work consists of furnishing and placing sealant or filler material in Contractor prepared cracks and joints of asphalt concrete or portland cement concrete pavements. All cracks and joints, including the space between asphalt concrete pavement and concrete curb and gutter, which have a clear opening of one-quarter inch (¼”) or greater, shall be sealed for the length of the crack that equals or exceeds one-eighth inch (⅛”) in width.

337.2 MATERIALS:

337.2.1 Material for Category 1 Cracks: Cracks and joints which have a clear opening ranging from one-quarter inch (¼”) to one and one-half inches (1½”) shall be classified as category 1 cracks. Sealant materials for category 1 cracks shall be a premixed, single component mixture of asphalt cement, aromatic extender oils, polymers, and granulized rubber in a closely controlled manufacturing process. Materials shall conform to the following specifications when heated in accordance with ASTM D5078 and the manufacturer’s maximum safe heating temperature.

TEST	REQUIREMENT
Cone Penetration (ASTM D5329)	20-40
Resilience (ASTM D5329)	30% Minimum
Softening Point (ASTM D113)	210°F (99°C) Minimum
Ductility, 77°F (25°C) (ASTM D113)	30 cm Minimum
Flexibility (ASTM D3111 *Modified)	Pass at 30°F (-1°C)
Flow 140°F (60°C) (ASTM D5329)	3 mm Maximum
Brookfield Viscosity 380°F (193°C) (ASTM D2669)	90 Poise Maximum
Asphalt Compatibility (ASTM D5329)	Pass
Bitumen Content (ASTM D4)	60% Minimum
Tensile Adhesion (ASTM D5329)	400% Minimum
Maximum Heating Temperature	400°F (204°C)
Minimum Heating Temperature	380°F (193°C)
Flash Point (ASTM D92)	450°F Minimum

*Specimen bent 90° over a 1-inch mandrel within 10 seconds.

337.2.2 Material for Category 2 Cracks: Cracks and joints which have a clear opening ranging from one and one-half inches (1½") to three inches (3") shall be classified as category 2 cracks. Filler material for category 2 cracks shall be hot applied, pourable, high bonding mastic for application in unconfined areas and for vertical-side recessed configurations. Upon curing the material shall provide a flexible waterproof seal. The material shall be traffic ready in thirty minutes or less when installed in accordance with the manufacturer's instructions. Material for sealing category 2 cracks shall be Deery brand Level & Go Repair Mastic or approved equal.

337.2.3 Material for Category 3 Cracks: Cracks and joints which have a clear opening greater than three inches (>3") shall be classified as category 3 cracks. Material for filling category 3 cracks shall be asphalt concrete 3/8" marshal mix compliant with Section 710 and have 100% of the aggregate passing the 3/8" sieve.

337.2.4 Product Submittals: Prior to application of category 1 crack sealant and category 2 crack filler material, the Contractor shall submit the material manufacturer's product specifications together with installation recommendations which shall include surface preparation, product installation, and curing requirements. Certification of compliance for sealant material shall be submitted. Asphalt mix design for category 3 crack filler material shall be submitted to the Engineer for approval.

The Engineer may request material samples for testing, prior to and during production, to verify the quality of the materials and to ensure conformance with the applicable specifications.

337.3 CLEANING AND PREPARING CRACKS OR JOINTS:

Immediately prior to application of sealant, all cracks and joints shall be cleaned of debris and dust. Cracks and joints shall be vacuumed during final cleaning.

337.3.1 Routing: When specified, narrow cracks shall be routed to create a sealant reservoir. Cutting shall remove at least ⅛" from each side and produce vertical, intact surfaces with no loosely bonded aggregate. Routing of joints and cracks shall produce a reservoir having a nominal size of ¾" wide by ¾" deep. Variations from the nominal size are subject to acceptance or rejection at the engineer's discretion.

337.3.2 Vacuuming: Final cleaning shall thoroughly clean cracks and joints to a minimum depth of 1" for cracks that are ¾" or narrower and to the full asphalt depth for cracks that are wider than ¾". Surfaces are to be inspected to assure adequate cleanliness and dryness.

High pressure 90 psi minimum, dry oil free compressed air shall be used for final cleaning and dust removal from cracks. The high pressure tool shall be integral with a vacuum unit to collect the dust and residue. Both sides of the crack or joint shall be cleaned.

337.4 APPLICATION OF CATEGORY 1 CRACK SEALANTS:

337.4.1 Weather: In no case shall sealant be placed during damp roadway conditions such as wet roadway surfaces or damp material inside the cracks. Operations stopped by the Engineer, due to weather, shall be at no additional cost to the contracting Agency. If installing at night, ensure that dew is not forming on the pavement surface.

Sealant material shall only be applied when pavement temperature exceeds 40°F (4°C). If pavement temperature is lower than 40°F (4°C), it may be warmed using a heat lance that puts no direct flame on the pavement.

337.4.2 Temperature: Sealant temperatures are to be maintained at the maximum heating temperature recommended by the manufacture.

337.4.3 Equipment: The melter applicator unit shall be a self-contained double boiler device with the transmittal of heat through heat transfer oil. It shall be equipped with an on board automatic heat controlling device to permit the attainment of a predetermined temperature, and then maintain that temperature as long as required. The unit shall also have a means to vigorously and continuously agitate the sealant to meet the requirements of Appendix X1.1 of ASTM D6690. The sealant shall be applied to the pavement under pressure supplied by a gear pump with a hose and wand and direct connecting applicator tip. The pump shall have sufficient pressure to apply designated sealant at a rate of at least three (3) gallons (11.4 L) per minute. Melter applicators shall be approved for use by the sealant manufacturer.

337.4.4 Placement of Sealant: The sealant shall be applied in cracks, joints, and sealant reservoirs uniformly from bottom to top and shall be filled without formation of entrapped air or voids.

Cracks and joints shall be slightly overfilled then leveled with a 3” sealing disk or v-shaped squeegee to create a neat band extending approximately 1” on each side of the crack or joint for surface waterproofing. The band shall be as thin as possible and shall not extend more than ⅛ inch above the pavement surface.

If the pavement is to be overlaid with Hot Mix Asphalt within six months of sealant application, cracks shall be routed, and sealant placement shall be recessed ¼” in the crack or joint reservoir with no over band. If routing is not used, the sealant over band thickness and width shall be kept as narrow and thin as possible.

During and after placement of the sealant, the Contractor shall protect against harm to persons or animals that may be exposed to the hot material.

337.4.5 Opening to Traffic: Sealant material shall not be exposed to traffic until fully cured. If the sealed area must be opened to traffic, blotter material shall be applied to the surface of all uncured sealant material.

All sealed cracks that have a clear opening of 1½ inches or greater shall have blotter material applied prior to opening to traffic.

On two lane roads or where traffic may come in contact with the hot sealant before it cures, a blotter or specialized bond breaking material shall be used to prevent asphalt bleeding and/or pickup of sealant by vehicular traffic. Blotter material shall be compatible with the crack sealant and any surface treatment being used.

337.5 APPLICATION OF FILLER MATERIAL FOR CATEGORY 2 CRACKS:

The Contractor shall comply with the material manufacturer's installation recommendations including but not limited to surface preparation, application equipment, and application procedures. No filler material shall be installed until all cracks to be filled have been inspected and approved by the Engineer. Filler material shall not be opened to traffic until fully cured.

337.6 APPLICATION OF FILLER MATERIAL FOR CATEGORY 3 CRACKS:

No filler material shall be installed until all cracks to be filled have been inspected and approved by the Engineer.

All machines, tools, and equipment used to install filler material will be subject to the Engineer's approval.

Hand tamp, vibratory plate compactor and rollers are acceptable for final compaction of filler material. Depending on depth of crack, lower lifts shall be compacted using a steel rod with a 1½" diameter head.

337.7 UNACCEPTABLE WORK:

The Contractor, at no additional cost to the contracting Agency, shall correct unacceptable work.

Unacceptable work shall include, but not be limited to, unsealed or unfilled cracks, material wastage on the sides of the roadway, and excess quantities of material on the roadway that adversely affects driving.

The Contractor shall not progress to a new area until the unacceptable work is corrected to the satisfaction of the Engineer. Correction of unacceptable work shall be accomplished within five working days after notification from the Engineer of the unacceptable work.

337.8 MEASUREMENT:

The Contractor shall meet with the Engineer or the Engineer's designated representative on a daily basis and supply a signed daily report indicating the date and identifying for each road segment:

- The amount of category 1 crack sealant material applied in total pounds and the total square yards of pavement sealed.
- The amount in pounds of category 2 crack filler material installed.
- The linear feet of category 3 cracks filled.

Payment for crack sealing and crack sealing shall be based on accepted quantities of Category 1 Crack Sealing, Category 2 Crack Filling, and Category 3 Crack Filling.

Accepted Category 1 Crack Sealing shall be measured by the square yards of pavement surface area sealed.

Accepted Category 2 Crack Filling shall be measured by the pounds of filler material placed.

Accepted Category 3 Crack Filling shall be the measured linear feet of cracks filled.

337.8 PAYMENT:

Payment for pavement crack sealing and crack filling will be at the contracted unit prices. Payment shall be full compensation for furnishing all labor, materials, equipment, tools, and incidentals used for surface preparation, placement of materials, and cleanup.

SECTION 340

CONCRETE CURB, GUTTER, SIDEWALK, SIDEWALK RAMPS, DRIVEWAY AND ALLEY ENTRANCE

340.2 MATERIALS:

340.2.1 Detectable Warnings, add the following:

Approved products are posted on MCDOT's website:
http://www.maricopa.gov/190/Technical or http://www.mcdot.maricopa.gov/technical
Surface applications dependent on an adhesive bonding agent(s) are not approved for use. Request for product approval are to include a) Product Specifications, b) Installation Instructions, c) Product Sample, and d) List of Locations of proposed use. Requests are to be directed to: MCDOT Operations and Maintenance Division, 2919 West Durango Street, Phoenix, 85009; Phone: (602) 506-8362.

SECTION 350

REMOVAL OF EXISTING IMPROVEMENTS

350.1 DESCRIPTION, add the following:

The work under this Section shall consist of the disposal of any obstacle to construction, unless specifically noted on the Plans for removal or relocation by other entities.

Arrangements for disposal of all waste material shall be the responsibility of Contractor. All usable pipe culvert, as determined by the Engineer, shall be stockpiled within the right-of-way for salvage by the County. Removal and storage of traffic signs and other traffic control devices shall comply with section 401.2.5. Delivery of salvaged traffic signal and lighting equipment shall comply with section 470.6.

Removal of existing improvements shall be performed in a safe manner avoiding damage to improvements not designated for removal.

350.2 CONSTRUCTION METHODS

350.2.2 Others, add the following:

Removal of traffic signal pole foundations unless otherwise indicated shall be to a depth of at least 18 inches below finished grade.

Remove and Salvage Traffic Sign Assembly shall consist of salvaging existing sign panels and posts, removing and disposing of the existing foundations, backfilling and

compacting all voids, and restoring the existing surface to match previous existing conditions. The sign panels and posts shall be dismantled in a manner that will prevent damage. Concrete sign foundations shall be disposed of by the contractor. Contractor shall pre-arrange delivery of sign panels and posts by calling (602) 506-8662. The sign panels and posts shall be transported to and unloaded at 2909 W. Durango Street by the contractor in a manner that will prevent damage. The quantity measured for Remove and Salvage Traffic Sign Assembly includes all sign panels and posts that are a part of the assembly.

Part 300 add the following new Section:

SECTION 351

RELOCATION AND ADJUSTMENT OF EXISTING IMPROVEMENTS

351.1 DESCRIPTION:

This work shall consist of the movement of existing improvements and specialty items to accommodate project construction. Relocation is the horizontal movement or change in location of an existing improvement or item, as shown or described on the Project Plans. Adjustment is a change in the vertical position of an existing improvement or item, typically required to accommodate a change in grade at the location of the existing improvement.

351.2 MATERIALS:

All relocations and adjustments requiring reseating, replacement, or the use of additional materials shall be accomplished using materials of the same or better quality than found in the existing improvements, as approved by the Engineer.

For mailbox relocations the Contractor shall supply a replacement support post for any mailbox installation deemed hazardous by the Engineer. Hazardous mailbox installations may include but are not limited to support posts that act as fixed objects (i.e. rigid or non-deflecting posts that exceed the stiffness or breakaway characteristics of a nominal 4”x4” wood post buried 36 inches into the ground) and installations of multiple mailbox receptacles mounted on a horizontal beam.

351.3 CONSTRUCTION:

The work shall include the removal of posts, foundations, and other associated items directly related to the relocation or adjustment of the existing improvement; filling and compacting all holes left by such removals; and installing, adjusting, or reconstructing moved items in their new location.

Improvements shall be moved in such a manner that the moved elements and all remaining unmoved portions of previously attached improvements are not damaged. All portions of moved and remaining unmoved improvements that are damaged during the

relocation or adjustment shall be repaired, or shall be replaced in kind by the Contractor, as approved by the Engineer, at the Contractor's expense.

All relocated or adjusted improvements shall exhibit the same quality, integrity, function, and appearance as the improvements exhibited prior to relocation or adjustment. The unmoved portion of the moved improvement shall be repaired or restored to the same type, quality, appearance, and strength as existed prior to relocation or adjustment.

If for any reason the improvement cannot be removed, relocated, and adjusted within the same working day, the disturbed/removed portion shall be secured from theft and damage until such time that it can be permanently installed in its final location. Also, where the move cannot be accomplished within the same working day, a temporary substitute facility shall be provided to accomplish the required function, as approved by the Engineer. Example: security fencing is to be relocated and the relocation is incomplete at the end of a work day, the contractor is to provide appropriate temporary fencing or approved alternative measures to secure the fenced area.

When the materials of the existing facility are insufficient in quantity to meet the relocation or adjustment requirement, then the Contractor shall provide additional new materials of like kind as needed to complete the relocation or adjustment.

When materials in the existing facility cannot be moved without deterioration in quality, appearance, strength, or function then the Contractor shall provide new replacement materials of like kind as needed for the relocation or adjustment.

Relocate Traffic Sign consists of salvaging the existing sign panel and post, removing the existing foundations, backfilling and compacting all voids, restoring the existing surface to match previous existing conditions and installing the traffic sign panel on a post or posts of appropriate length mounted on new post foundations. New post foundations shall be measured separately and not included as part of the Relocate Traffic Sign pay item.

351.4 MEASUREMENT:

Relocated or adjusted items will be measured by the number of improvements and/or the number of linear feet as designated in the fee proposal.

For linear items such as relocated fencing, the length measured shall be the installed length; no measurement of the removal length shall be made.

The measurement of relocated mailboxes will be the number of mailboxes relocated to a new permanent location as indicated by the project plans or directed by the Engineer and shall include replacement posts to correct conditions deemed hazardous, as required for an acceptable complete in place installation. No measurement will be made for temporary relocations made to maintain mail delivery during construction.

351.5 PAYMENT:

Payment will be made at the contract unit price for each relocated or adjusted improvement. Payment shall be full compensation for all tools, equipment, labor, materials, services, transportation, and incidentals necessary for relocation or adjustment of the improvement including additional new materials or replacement material and repairs or adjustments to the unmoved remainder of fences and other facilities.

SECTION 401

TRAFFIC CONTROL

401.2 TRAFFIC CONTROL DEVICES, add the following**:**

All traffic control devices and their application shall conform to the Manual on Uniform Traffic Control Devices for Streets and Highways (MUTCD - United States Department of Transportation, Federal Highway Administration) as modified by the Arizona Department of Transportation's Supplement, the Maricopa County Department of Transportation's Traffic Control Manual, the special provisions, and any field modifications made by the Engineer.

All traffic control devices shall meet the guidelines of NCHRP 350 or AASHTO's Manual for Assessing Safety Hardware (MASH).

If at any time the Engineer is unable to contact the Traffic Control Technician, the Engineer reserves the right to make contact with the traffic control subcontractor to request any materials or services deemed appropriate by a demonstrated or apparent need in accordance with the standards and guidelines established by the MUTCD as supplemented by the Arizona Department of Transportation and the Maricopa County Department of Transportation's Traffic Control Manual for the safety of the public or workers. The cost of these materials or services shall be part of the cost of Traffic Control.

401.2.1 Installation of Temporary Traffic Control Devices: It shall be the responsibility of the Contractor to provide, erect, maintain, remove and/or relocate all temporary and existing traffic control devices and signal indications necessary to properly mark and control the construction area(s) for the safe and efficient movement of all roadway users.

The contractor shall maintain all traffic control devices 24 hours a day, 7 days a week (including weekend and holidays) for the entire duration of the construction or maintenance project. It shall be the contractor's or permittee's responsibility to have all traffic control devices inspected at least once during each workday, once per week during nighttime hours and immediately after a wind or rain storm. Any traffic control device not properly located shall be immediately adjusted or reinstalled.

The Contractor shall install temporary traffic control warning signs and devices prior to the start of any work in accordance with the approved Traffic Control Plan (TCP). All

existing signs in conflict with the construction signs shall be covered, removed, or relocated.

The Contractor shall provide additional devices as determined by the Engineer, to safely control traffic.

All advanced warning construction signs shall be mounted on channels driven into the ground or be mounted on temporary spring stands. Each approach at one mile and at one half-mile point prior to the project shall be signed with “Road Work Ahead” and with speed limit signs, mounted on channels driven into the ground or mounted on temporary spring stands and placed at locations where the need for relocation during construction is minimized.

All temporary traffic control devices shall be ballasted with sandbags or other approved ballast. The amount of sandbags used shall be enough to provide adequate safety for the traveling public.

Ground mounted temporary traffic control signs for rural areas shall be mounted with the bottom of the sign at least five feet and not more than six feet above the near edge of the pavement and for urban areas shall be mounted with the bottom of the sign at least seven feet and not more than eight feet above the near edge of the pavement.

The Contractor shall mount signs on wind resistant, spring-type bases when conditions warrant or as requested by the Engineer.

The Contractor shall place flags above all signs.

The Contractor shall use warning lights to mark traffic control devices at night.

The Contractor shall mount Type B high-intensity flashing warning lights on all stop signs within the work zone.

All construction warning signs (black on orange) shall use retroreflective sheeting with fluorescent orange Type VIII, IX or XI and all regulatory signs (black on white) shall use retroreflective sheeting with a minimum of Type IV retroreflective sheeting.

The Contractor shall use an arrow board for all stationary or moving lane closures.

The Contractor is responsible for all costs incurred in replacing lost or damaged traffic control devices and traffic control warning signs.

401.2.2 Traffic Cones: Are effective for daytime channelization of traffic and to delineate minor maintenance areas. Traffic cones are versatile because they are portable and if struck, they will minimize damage to vehicles. They can be set up and removed quickly. When traffic cones are approved by the Engineer for use, it is necessary to check them often because vehicles frequently move them. The minimum height for cones is 28” high

and minimum weight is 10 pounds on arterials/collectors and 7 pounds on local roadways. When used at night, cones must have retroreflective bands as called for in the MUTCD.

401.2.3 Temporary Longitudinal Traffic Barriers: Temporary longitudinal traffic barrier installations shall be portable concrete barrier (PCB) or other segmented longitudinal barrier. The barrier and installation shall be in accordance with Chapter 9 of the AASHTO Roadside Design Guide. PCB shall use F-shape faces. Each barrier section shall be properly connected to the adjacent section to provide barrier continuity to resist movement, snagging, and/or instability of impacting vehicles. Panels and connections shall meet NCHRP 350 Test Level 3 or an approved test level of the AASHTO 2009 Manual for Assessing Safety Hardware.

401.2.4 Pavement Markings: Pavement markings used as an integral part of the traffic control plan shall be kept distinct and visible during their use. Temporary pavement markings shall match and meet the markings in place at both ends of their usage.

Temporary painted stripe shall be applied as soon as possible following the placement of the ARAC surface course and prior to opening the lanes to traffic.

The painted pavement markings and stripes including materials, surface preparation, application, measurement and payment shall be in accordance with Section 461.

401.2.5 Removal of Permanent Traffic Control Devices: The Contractor shall notify the Engineer and obtain the Engineer's approval prior to the removal of any permanent traffic control device.

The Contractor shall remove (without damage) all permanent signs including sign posts that are no longer applicable. The sign panels and posts shall be dismantled and transported to the MCDOT sign shop in a manner that will prevent damage. Concrete sign foundations shall be removed and disposed of by the Contractor. The Contractor shall coordinate with the MCDOT sign shop (602) 506-8662 to establish an acceptable delivery time during normal working hours. The sign panels and posts shall be delivered to:

2909 West Durango Street
Phoenix, Arizona 85009.

401.4 TRAFFIC CONTROL MEASURES, add the following:

401.4.1 Traffic Control Plan: Construction shall not commence without an approved Traffic Control Plan (TCP). At the time of the pre-construction meeting, the Contractor shall submit preliminary traffic control plans for each phase of the work for review. Plans shall be of an appropriate size and legible, plans found to be deficient by the Engineer shall be returned. The Contractor shall design the traffic control plan using the posted speed limit existing prior to commencement of work as the design speed. The TCP shall show all striping, signing, barricading and distances for all devices for all movements of roadway users during each phase of construction. The TCP shall show existing traffic

control signs and temporary construction signs; shall identify conflicting signs to be covered/removed or relocated; and shall identify other features that may conflict with the placement of temporary signage. The TCP shall also show the duration with the start and end date of each phase. When requested by MCDOT, the Contractor shall supply a copy of the manufacturer's certification of compliance with NCHRP 350 test requirements (or compliance with a designated approved test level of the AASHTO Manual for Assessing Safety Hardware) for any of the Contractor proposed traffic control devices. The manufacturer's certification shall identify the NCHRP 350 or AASHTO test number. The County will within 10 working days review the plan and notify the Contractor of approval or note items to be revised.

401.4.2 Traffic Control Technician: The Contractor shall appoint a Traffic Control Technician (other than the superintendent/foreman), who has been properly trained and certified in the application of work zone traffic control, to maintain all necessary traffic control devices. At the beginning and end of each workday and at a minimum of once during nighttime hours during the work week, and periodically throughout the day, the Traffic Control Technician shall inspect the construction work site. The Traffic Control Technician shall ensure that all construction signs and barricades are standing upright in accordance with the approved traffic control plan, free of dirt and debris and visible to intended traffic. At the end of the workday all non-essential traffic control devices will be removed. The Traffic Control Technician shall also inspect the construction work site at least once during weekends. The Contractor shall immediately correct deficiencies noted by the Engineer. The Contractor shall provide an after-hours pager and telephone number for the Traffic Control Technician at the pre-construction meeting.

401.4.3 Intersection Restriction: Off-duty uniformed police officers are required at all signalized intersections when restrictions are present, and may be required at other locations as requested by the Engineer. Any work performed in the right of way within 300 feet of signalized intersections and intersections formed by two multilane roadways shall require an off-duty uniformed police officer.

401.4.4 Traffic Control Devices: The Contractor shall provide and maintain all necessary traffic control devices until acceptance of the project by the County.

Pavement markings used as an integral part of the traffic control plan shall be kept distinct and visible during their use. Temporary pavement markings shall match and meet the markings in place at both ends of their usage.

401.4.5 Flaggers: All flaggers shall be properly trained and certified by a recognized source, such as the American Traffic Safety Services Association (ATSSA) or the International Municipal Signal Association (IMSA) and shall carry with them at all times a current certification as proof that all training requirements have been completed.

401.4.6 Failure to Provide Adequate Traffic Control Measures: If the Contractor fails to provide adequate traffic control measures, the Engineer may have the work accomplished by other sources. The cost of having this work accomplished by other

sources will be computed in accordance with Section 109.5. The total cost will be deducted from monies due or to become due to the Contractor.

401.5 GENERAL TRAFFIC REGULATIONS, add the following:

The Sheriff's Department shall be provided with the name and phone number of the person responsible for 24-hour maintenance of all traffic control devices.

The Contractor shall notify all affected emergency services such as fire departments, police stations, and emergency management system by handbill a maximum of 48 hours and minimum of 24 hours in advance of any street restrictions.

401.5.1 Road Closure and Road Restrictions: A road closure for the convenience of the Contractor is not authorized. Traffic restrictions are not permitted on arterial or collector streets during peak traffic hours of 6:00 a.m. to 8:30 a.m. and 4:00 p.m. to 7:00 p.m. unless authorized by the traffic or project engineer or their designated representatives.

401.5.2 Minimum Lane Requirements: At signalized intersections, during peak hours, four lanes shall be open on roads with five or more lanes, and three lanes shall be open on roads with four or less lanes with a center lane. During off-peak traffic hours, the minimum number of lanes shall be two lanes (one in each direction) on streets with four lanes or less, and four lanes (two lanes in each direction on streets with five or more lanes.

401.5.3 Temporary Lane Diversions: For construction or trenching that requires movement of traffic from the normal travel lanes, temporary lane diversions may be used only during daylight hours and the normal traffic lanes shall be restored prior to the end of daylight hours. Traffic plates and temporary pavement shall be used to restore traffic lanes. The Engineer, under unusual conditions, may authorize exceptions.

401.5.4 Regulatory Speed Limit Signs: An appropriate regulatory speed limit sign shall be used where traffic is maintained on temporary detour roads, diversions, or on traffic lanes that are severely restricted.

401.5.5 Access to Adjacent Property: Access to all adjacent properties shall be maintained whenever possible. When access cannot be maintained, Contractor shall notify the adjacent residents at least two working days in advance of the access closure. In no case shall the access be closed for more than four hours. Access to fire stations, hospitals, sheriff stations and schools shall be maintained at all times.

401.5.6 Signal Equipment Repair: If existing signal equipment is damaged the Contractor shall notify the County Traffic Signals Branch Manager at (602) 506-8660, in order to facilitate the prompt restoration of the traffic signal operation. All costs associated with the repair of damaged traffic signals, caused by Contractor construction activity, shall be borne by the Contractor.

401.5.7 Temporary Longitudinal Traffic Barriers / Steel Plating: Open excavations and trenches within 10 feet of an active traffic lane shall be protected at night and during non-working hours from vehicle traffic by steel plating or the use of temporary longitudinal traffic barriers complying with requirements of section 401.2.3. Open excavations as may occur with reinforced concrete box culvert construction and other work shall require temporary longitudinal traffic barriers to separate vehicle traffic from the work site. The Contractor shall use temporary longitudinal traffic barriers when construction hazards warrant, or as requested by the Engineer. Impact attenuation devices shall be provided by the Contractor commensurate with barrier end treatment requirements.

401.5.8 Changeable Message Boards for Public Information:

Changeable Message Boards for Public Notification are for informing the motoring public of project information, traffic restrictions, road closure, or other public awareness items deemed necessary for the project. Changeable message boards shall comply with the requirements of section 701-3.08 of the Arizona Department of Transportation 2008 Standard Specifications for Road and Bridge Construction. The Contractor shall furnish, install, and operate the changeable message boards as requested by the Engineer. Message board locations shall be shown on the Traffic Control Plans.

401.6 MEASUREMENT, Section 401.6 is replaced with the following:

Measurement for Traffic Control shall be made on a Lump Sum basis. This lump sum measurement shall include all materials, equipment and labor necessary to facilitate traffic control per the contract documents. Traffic Control includes but is not limited to the application and removal of temporary pavement markings including related modification of existing pavement markings, pilot cars, flagmen, barricades, sign panels, sign stands, warning lights, and related temporary pavements.

No direct measurement of individual traffic control elements or devices will be made. All traffic control devices, unless otherwise noted, shall be considered as included in the lump sum measurement for the Traffic Control pay item.

No direct measurement for the installation or removal of temporary pavements will be made. All sawcutting, grading, aggregate base course materials, asphaltic concrete pavement, labor, and equipment shall be considered as included in the lump sum measurement for the Traffic Control pay item.

Uniformed Off-duty Law Enforcement Officers including vehicle and equipment will be measured by the hour for each hour required to perform traffic control duties. When an officer is used less than the agency's minimum number of hours and the Contractor is charged for the agency's minimum number of hours, the minimum hours charged will be approved for payment. Time over the agency's minimum number of hours will be measured by the hour.

Changeable Message Boards for Public Notification shall be measured by the day for each calendar day for each sign authorized and operating as directed by the Engineer. Measurement will only be made for actual days-in-use.

When included as a separate pay item within the fee schedule, Portable Concrete Barrier (PCB) shall be measured by the foot. Otherwise, portable concrete barrier shall not be measured and shall be considered a traffic control device.

401.7 PAYMENT, Section 401.7 is replaced with the following:

Payment for Traffic Control other than Uniformed Off-duty Law Enforcement Officers shall be made at the lump sum contract price in equal payments distributed over the entire duration of the project. Payment for Traffic Control shall be full compensation for all labor, pilot cars, flagmen, materials, traffic control devices, and miscellaneous items necessary to complete the work.

Payment for Uniformed Off-Duty Officer will be based on approved time sheets or invoices for all actual hours Contractor provided a Uniformed Off-Duty Law Enforcement Officer for traffic control purposes at the request and with the approval of the County. Expenses, eligible for reimbursement, are labor costs, supported by approved time sheets or invoices and directly related documented expenses such as taxes, bond cost charges to Contractor in connection with the Uniformed Off-Duty Law Enforcement Officer assignment, and special jurisdictional requirements. No additional mark-up for profit and/or fee for Contractor will be eligible for reimbursement.

Approved quantities for Changeable Message Board for Public Notification shall be paid at the contract unit price. Payment will be compensation in full for furnishing, transportation, installation, programing, adjustment, maintenance, and removal of the changeable message boards.

Separate payment for Portable Concrete Barrier will only be made when Portable Concrete Barrier is included as a separate pay item within the fee schedule. Payment will be full compensation for the furnishing, transportation, installation, adjustment, maintenance, and removal of the temporary barrier system.

SECTION 405

SURVEY MONUMENTS

405.5 PAYMENT, add the following:

For Maricopa County Department of Transportation contracted work the preparation and recording of required corner records or results of survey will be accomplished by MCDOT unless noted otherwise in the project Special Provisions.

Part 400 add the following new Section:

SECTION 416

GUARDRAIL END TREATMENTS

416.1 DESCRIPTION:

The work under this section shall consist of furnishing all materials and constructing new guardrail end treatments at the locations shown on the project plans and in accordance with specified details and the requirements of these specifications.

This work shall also include all the work and materials to delineate guardrail end treatments.

416.2 MATERIALS:

End treatment materials shall conform to Section 415.2 Materials. Adhesive materials for applying reflective sheeting to guardrail terminals shall be in accordance with the sheeting manufacturer's recommendations.

All guardrail terminal sections and guardrail transition sections shall be NCHRP 350 Test Level 3 compliant or compliant with an equivalent test level of the AASHTO Manual for Assessing Safety Hardware (MASH) and have a published acceptance letter by the Federal Highway Administration. Guardrail terminal sections compliant with test level 2 may be used when specifically approved for a specific location by the MCDOT Traffic Engineer or authorized representative. Manufacturer's specifications and installation instructions for guardrail end treatments shall be submitted to the Engineer when requested.

Guardrail leading approach terminals subject to head-on impact shall be tangential energy absorbing terminals listed on the MCDOT Approved Materials List. The MCDOT Approved Materials List is available on the MCDOT website:
http://www.maricopa.gov/190/Technical

All materials shall be new except as otherwise indicated by the contract specifications or plans.

416.3 CONSTRUCTION:

The construction of the various types or lengths of guardrail end treatments shall include the assembly and erection of all component parts, complete in place in accordance with the manufacturer's specifications and installation instructions at the locations shown on the project plans or as requested by the Engineer. Manufacturer's specifications and installation instructions shall be available at the worksite during installation and inspection.

Workmanship shall be equivalent to good commercial practice and all edges; bolt holes and surfaces shall be free of torn metal, burrs, sharp edges and protrusions.

Foundation tubes shall be installed with an approved driving head. The tubes shall not be driven with the wood post in place. If approved by the Engineer, foundation tubes may also be installed in drilled holes. When foundation tubes are placed in drilled holes, the space around and under the tubes shall be backfilled with ½ sack CLSM or backfilled with selected earth, free of rock, placed in layers approximately 4-inches thick and each layer shall be moistened and thoroughly compacted to the density of the surrounding soil.

Foundation tubes shall not protrude more than 4-inches above the ground as measured along a 5-foot cord.

Damaged components of end treatments shall be repaired or replaced immediately.

416.3.1 Approach Terminals: Guardrail leading approach terminals shall be installed at the locations shown on the project plans and in compliance with the manufacturer's details.

The approach surface in front of all guardrail terminals shall be leveled as shown on the project plans and MCDOT Standard Details. The approach surface slope shall not exceed 1:10 (vertical:horizontal).

A MASH compliant Midwest Guardrail System tangential approach terminal may be connected to a 28" high strong post W-beam system provided an approved 31" to 28" guardrail transition is installed between the two guardrail systems.

416.3.2 Delineation: Delineation for end terminals shall consist of one reflector tab installed at each W-beam splice. The reflector tab shall face approaching traffic of the adjacent traffic lane and be installed at a splice bolt on the top of the bottom rib of the W-beam at every odd numbered post starting at post number three. Reflector tabs shall conform to Section 415.2 requirements.

416.3.3 Departure End Terminals: Installation of departure end terminals shall conform to MCDOT Standard Details.

416.4 MEASUREMENT

416.4.1 Approach Terminals: Accepted installations of guardrail approach terminals will be measured as a unit for each type and length furnished and installed, complete in place, including but not limited to guardrail impact head, ground strut, anchor assembly, steel tubes, posts, steel w-beam, hardware, delineation, excavation, backfill, and disposal of surplus material.

Delineation is considered part of the installation of guardrail end terminals and will not be measured.

416.4.2 Departure End Terminals: Accepted installations of departure end terminals will be measured as a unit, complete in place, including but not limited to excavation, backfill, and disposal of surplus material.

416.5 PAYMENT:

416.5.1 Approach Terminals: The accepted quantities of guardrail approach terminals will be paid for at the contract unit price.

416.5.2 Departure End Terminals: The accepted quantities of departure end terminals will be paid for at the contract unit price.

Part 400 add the following new Section:

SECTION 417

CRASH CUSHIONS

417.1 DESCRIPTION:

The work under this section shall consist of furnishing all materials and installing new crash cushions or impact attenuators at the locations shown on the project plans in accordance with these specifications.

417.2 MATERIALS:

All impact attenuation devices and transition components shall be NCHRP 350 Test Level 3 compliant or compliant with an equivalent test level of the AASHTO Manual for Assessing Safety Hardware (MASH) and have a published acceptance letter by the Federal Highway Administration. Impact attenuation devices compliant with test level 2 may be used when specifically approved for a specific location by the MCDOT Traffic Engineer or authorized representative. Manufacturer's specifications and installation instructions for Impact attenuation devices shall be submitted to the Engineer when requested. All Impact attenuation devices shall include a reinforced concrete pad foundation in compliance with the manufacture's specifications. The use of NCHRP 350 or MASH compliant devices will be determined by the engineer. Crash Cushion and transition materials shall conform to Section 415.2 Materials. Adhesive materials for applying reflective sheeting to crash cushions shall be in accordance with the sheeting manufacturer's recommendations.

417.3 CONSTRUCTION:

The construction of crash cushions shall include the construction and assembly of all component parts complete at the locations shown on the project plans and incompliance with the manufacturer's details.

417.4 MEASUREMENT:

Measurement for crash cushions will be for each type of unit installed and accepted by the Engineer.

417.5 PAYMENT:

Payment for crash cushions will be for furnishing and installing each type, complete in place including any required foundation, transition, and delineation.

SECTION 430

LANDSCAPING AND PLANTING

430.1 DESCRIPTION, add the following:

The work under this section includes relocation of native plants.

430.2 GENERAL, add the following:

Native plant relocation work shall be performed by an Arizona licensed landscape contractor in good standing and must have a minimum of three years of previous satisfactory experience in relocating native plants similar to those identified on the project plans.

The Contractor shall submit a transplanting Plan to the Engineer for review and approval prior to the beginning of any ground breaking work by the Contractor. The Transplanting Plan shall address requirements for each type of native plant identified for relocation and contain but not be limited to the following:

1. Method for coordinating the transplanting with construction sequencing.
2. List of mechanical and hand equipment to be used to accomplish all work.
3. A description of the removal, transplanting procedures and transporting methods.
4. A watering plan to identify how the plants will be watered from the initiation of the transplanting activities through the end of the construction contract.

Plant orientation, plant supporting requirements and methods, the locating, exposing and protection of various root types and acceptable root lengths required for removal, receiving pit excavation requirements, and treatment for root cuts and other plant wounds shall be addressed in the Transplanting Plan within the section on removal, transplanting procedures and transporting methods.

430.5 TREE SHRUB AND GROUND COVER PLANTING, add the following:

430.5.7 Water Truck Irrigation:

When trees, shrubs, and groundcover are planted, they shall immediately be started on an irrigation schedule. All trees, shrubs, and groundcover shall receive ½" of water weekly. The water is to broadcast evenly by a 2200 gallon water truck with a wand. All cacti and hydro seeded areas are to be omitted from the irrigation schedule. The Contractor is responsible for irrigating the above mentioned plant material for a period of no less then (6) six months after the start of the maintenance period. Watering truck shall place a "Watering in Progress" warning sign a minimum of 400 ft. away and a maximum of 2,000 ft. away from the watering truck. There shall be a "Watering in Progress" sign placed at the beginning of that day's work area. Cones shall be used to divert traffic away from the lane the watering truck occupies.

430.5.8 Hydro Seeding:

The Contractor shall hydro seed the areas indicated by the plans or special provisions. When native hydro seeding is required the Contractor shall hydro seed all unpaved areas disturbed by construction not stabilized by other means. Section 430.9 Plant Establishment Period shall not apply to hydro seeded areas; the Contractor shall maintain all hydro seeded areas until project completion and acceptance.

Water truck irrigation shall not be used for hydro seeded areas.

430.5.8.1 Seed Mixture:

Hydro seeding will use native seed mix of table 430-1 unless otherwise directed by the project special provisions.

Table 430-1 Native Seed Mix for Areas Adjacent to Roadways (Within Designated Clear Zones)		
Common Name	**Scientific Name**	**Pure Live Seed Pounds Per Acre**
Brittle Bush	*Encelia* farinosa	4.0
Creosote Bush	*Larrea tridentata*	8.0
Globe Mallow	*Sphaeralcea ambigua*	3.0
Indian Wheat	*Plantago inslulariss*	2.0
Purple Three-Awn	*Aristida purpurea*	2.0
Desert Marigold	*Baileya multiradiata*	1.5
TOTAL Seed Mixture		20.5

The seed mixture shall consist of all the listed varieties proportioned to obtain the indicated coverage for each variety. Seed mixture substitution requests shall comply with Section 430.5.1 Substitutions.

Seed source shall be from elevations below 3,000 feet.

Deliver in sealed undamaged containers labeled in accordance with Arizona Revised Statutes and the U.S. Department of Agriculture regulations under the Federal Seed Act. Labels shall indicate the variety of strain of seed, the percentage of germination, purity and weed content, and the date of analysis which shall not be more than nine months prior to the delivery date.

Deliver seed packaged with identification of mixtures, weights, analysis and source.

Weed content shall not exceed 0.5%.

Protect from moisture, heat and sunlight until application.

Seed that has become wet, moldy, or otherwise contaminated or damaged is not acceptable.

430.5.8.2 Application of Seed and Seeding Materials:

The seed mixture shall be mixed thoroughly and spread evenly throughout the area to be treated. Seed shall be broadcast at the rate shown in the seed mixture table. Application rates of seed as specified are for pure live seed (PLS). Do not soak seed in hydro seeder tank for more than 20 minutes before application.

Straw mulch shall be used as the primary mulch cover, applied evenly at a rate of 1.5-2.5 tons per acre. Clumps and accumulations of straw must be loosened and evenly spread. It shall be placed within 48 hours of seeding and immediately affixed by crimping and/or

tacking. The affixing shall consist of pure mucilage at a rate of 150 lbs. per acre tackifier and 500 lbs. per acre cellulose fiber.

Straw shall be from oats, rye, wheat, or other grain-type crop. It shall be clean and free from invasive weeds, mold and other objectionable materials. It shall initially be in a dry condition suitable for spreading.

Cellulose fiber mulch at 200 lbs per acre for slopes up to 1:3 (Vert:Horz), 600 lbs. per acre for slopes greater than 1:3, and 1000 lbs. per acre for extremely erosive/steep slopes.

Cellulose fiber mulch shall consist of at least 70% specially prepared virgin wood cellulose fiber and processed specifically for use as hydro mulch.

Tackifier/Binder: Pure mucilage tackifier shall be added at 50 lbs. per acre for slopes up to 1:3 (Vert:Horz), and 80 lbs. per acre for slopes greater than 1:3.

Chemical fertilizer: Ammonium phosphate (16-20-0) standard commercial grade, suitable for application with standard equipment shall be applied at the rate of 300 lbs. per acre. Ammonium phosphate shall have the minimum analysis and in the physical form of 16-20-0. The first number shall represent minimum percent soluble nitrogen; the second, the minimum percent available phosphoric acid; and the third, the minimum percent water soluble potash. Furnish in sealed containers labeled with name, weight and guaranteed analysis of contents.

Seeding equipment: Standard grass seeding equipment with double disk openers, disk bands, packer wheels or drag chains, rate control adjustments, seed boxes with agitators, and separate boxes for small seed.

430.5.9 Native Plant Relocations:

Native plant relocation activities shall comply with the approved Transplanting Plan. Native plant relocations not in compliance with the Transplanting Plan shall be subject to rejection by the Engineer.

430.10 MEASUREMENT AND PAYMENT, add the following:

Relocated native plants will be measured by the number and types of plants relocated in accordance with the approved transplanting plan and accepted by the Engineer. Payment will be at the contract unit price established in the proposal. The contract unit price shall be full compensation for furnishing the Transplanting Plan together with all labor, material, tools, and equipment and for performing all work necessary for native plant relocation, complete in place.

Hydro seeding will be measured in acres to the nearest one hundredth of an acre. Payment will be at the contract unit price established in the proposal.

Part 400 add the following new Section:

SECTION 432

GRAVEL MULCH

432.1 DESCRIPTION:

The work consists of the preparation of subgrade, placement and water settlement of gravel mulch to the lines and grades shown on the plans.

432.2 MATERIALS:

Gravel and crushed rock shall meet the requirements of Section 701.

Gravel mulch shall consist of a combination of crushed rock and gravel free of debris, fines and soil particles. A minimum of 50 percent by weight shall be crushed rock. Crushed rock shall have at least three fractured faces. A sample of the gravel mulch must be approved by the engineer prior to delivery to the site.

Material durability of gravel mulch shall be tested in accordance with ASTM C535. The percentage of wear shall not exceed 40 after 500 revolutions.

The gradation shall be within the following limits when tested in accordance with ASTM C136:

Sieve Size	Percentage by Weight Passing Sieve
3-inch	100
2-inch	25-60
1½-inch	0-15
1-inch	0

432.3 CONSTRUCTION:

432.3.1 Subgrade Preparation: The subgrade surfaces shall conform to the neat lines and grades indicated by the plans. The prepared subgrade surface shall be a loose roughened surface that will keep the gravel mulch in place. This is the normal surface resulting from tillage operations.

The area designated for gravel mulch shall have surface vegetation removed as directed by the Engineer, and the soil loosened. Motorized equipment shall be used where it can

be safely operated (generally slopes 3.5:1 or flatter). Areas where equipment cannot safely operate shall be hand-tilled. Rocks larger than 3 inches in diameter, trash, weeds, and other debris shall be removed.

Subgrade preparation shall be discontinued when soil moisture conditions are not suitable for the preparation of a satisfactory subgrade as determined by the Engineer.

Gravel mulch shall not be placed until the subgrade surfaces of both equipment and hand-tilled areas have been inspected and approved by the Engineer.

432.3.2 Placement: Gravel mulch shall only be placed on approved surfaces. The gravel mulch shall be delivered and placed in a manner that will ensure the in-place layer remains reasonably homogeneous. The mulch shall be constructed to the full course thickness in one operation and in such a manner as to avoid serious displacement of the underlying materials. Hand placing of gravel mulch shall be required to the extent necessary to prevent damage to permanent works. The average thickness of the gravel mulch shall be 3 inches. In no case shall the thickness of the gravel mulch layer be less than 2.5 inches.

The gravel mulch shall be hand raked and smoothed to the satisfaction of the Engineer prior to water spray settling. The application of a uniform spray of water shall be at a rate not exceeding the infiltration rate of the underlying soils to minimize run off. All sprinkling equipment shall be equipped with pressure pumps and spray bars. The use of gravity flow spray bars and splash plates will not be permitted.

432.4 PAYMENT:

Payment for gravel mulch shall be at the contract unit price per square yard. Payment shall be considered full compensation for the item complete-in-place including all labor, materials, equipment, and all other items necessary and incidental to the placement of the gravel mulch. No separate payment will be made for water spray settling.

Part 400 add the following new Section:

SECTION 460

REMOVAL OF PAVEMENT MARKINGS AND RAISED PAVEMENT MARKERS

460.1 DESCRIPTION:

The Contractor shall furnish experienced supervision, labor, all materials, equipment, tools, transportation and supplies required accomplish the pavement marking removal in accordance with these specifications, where indicated on the Striping Plans, or where determined by the Engineer.

460.2 CONSTRUCTION:

The Contractor shall determine the type of pavement markings that exist in the field.

Existing traffic pavement markings shall not be covered over with slurry seal, black paint or stain of any kind.

The Contractor shall accomplish pavement marking removal as indicated by the construction documents, when a specific method is not indicated removal may be by any option identified herein. The Contractor shall be responsible for verifying the striping removal limits of the project before commencement of the work. The striping removal limits may exceed the construction project limits, or new striping limits in order to match and tie into the existing striping.

Existing pavement markings shall be removed to the fullest extent possible from the pavement by one of the methods identified in this Section, unless another method is approved by the Engineer. The method used shall not materially damage the surface or texture of the pavement.

Material deposited on the pavement as a result of removing pavement markings shall be collected and removed as the work progresses. Accumulations of material, which might interfere with drainage or might constitute adverse safety conditions to traffic, will not be permitted.

Where water blasting is used for the removal of pavement markings or for removal of objectionable material, the residue produced shall be removed immediately after contact between the blast material and the surface being treated. Such removal shall be by a vacuum attachment operating concurrently with the blast cleaning operation, or by other methods approved by the Engineer. Blasting shall not be used within 12 ft. of a lane occupied by traffic.

Where grinding is used for the removal of pavement markings or for removal of objectionable material, the residue produced shall be removed immediately after contact of the grinding heads with the surface being ground. Such removal shall be by a vacuum attachment operating concurrently with the grinding operation, or by other methods approved by the Engineer.

Removed pavement markers and debris resulting from removed markings shall be collected and disposed of by the Contractor.

Any damage to the pavement caused by pavement marking removal shall be repaired by methods acceptable to the Engineer. When asphalt slurry is used to repair damage to the pavement caused by pavement marking removal or the obliteration of the marks remaining after the markings have been removed, the asphalt slurry shall be placed parallel to the new direction of travel and shall not be less than two feet in width.

460.2.1 Approved Methods of Removal: The following methods have been approved by the County for the removal of traffic paint, thermoplastic markings, Type 1 (Permanent) preformed plastic tape, raised pavement markers and barrier/guardrail markers.

460.2.1.1 Traffic Paint:

(1) Water blasting

(2) Chip Seal: When using this method, the entire roadway surface, edge of asphalt to edge of asphalt, shall be covered.

(3) Asphalt Overlay: The asphalt overlay thickness and dimensions shall meet County specifications.

460.2.1.2 Thermoplastic:

(1) Water blasting

(2) Grinding followed by water blasting.

(3) Milling is an option only for areas to receive an asphalt overlay.

460.2.1.3 Type I - Preformed Plastic Pavement Marking Tape:

(1) Grinding

(2) Chip Seal: The application of this method depends on the length of time the Tape has been on the roadway surface. The use of a chip seal before grinding is at the discretion of Contractor. If the chip seal does not adhere to the existing tape markings, Contractor shall grind off the tape markings and chip seal over the exposed area. All costs for this work shall be borne by the Contractor.

When applying chip seal, the entire roadway surface, edge of asphalt to edge of asphalt, shall be covered

Chip seal shall not be applied to a portland cement surface

(3) Asphalt Overlay: The asphalt overlay thickness and dimensions shall meet the County specifications

460.2.1.4 Raised Pavement Markers:

(1) Hammer and Chisel

(2) Blade (Use of Heavy Duty Equipment)

460.2.1.5 Barrier Markers for Bridges, Concrete and Guardrail:

(1) Hammer and Chisel

460.3 MEASUREMENT:

Measurement for removing painted stripe, removing thermoplastic stripe and Type 1 – preformed plastic marking tape will be by the linear foot along the centerline of the pavement stripe to be removed. Skips in dashed lines will not be included in the measurement. Measurement for removing striping with a plan width greater or less than the basic 4" wide stripe will be made by the following method:

$$\frac{\text{Plan Width of Striping (inches) x Linear Foot}}{\text{4.0 (inches)}}$$

Double marking lines, consisting of two 4" wide stripes will be measured as two individual marking lines. Crosswalk lines, stop bars, stop lines, gore lines, cross hatch lines, and chevron lines will be measured for centerline length and adjusted for widths other than 4" as defined above.

Thermoplastic pavement symbols and legends will be measured by each symbol or legend removed.

Removal of thermoplastic or painted markings located on surfaces to be removed shall not be measured.

Measurement for the removal of raised pavement markers and barrier markers for bridges, concrete, and guardrail will be by the unit for each marker removed.

460.4 PAYMENT:

Payment for Removing Painted Stripe will be at the unit contract price per linear foot for the length of painted line removed to the nearest foot.

Payment for Removing Painted Symbols and Removing Painted Legends will be for each symbol or legend removed.

Payment for Removing Thermoplastic Stripe and Removing Type 1 – Preformed Plastic Marking Tape will be per linear foot of striping removed.

Payment for Removing Thermoplastic Symbols and Removing Thermoplastic Legends will be for each symbol or legend removed.

Payment for Removing Raised Pavement Markers and for Removing Barrier Markers for Bridges, Concrete and Guardrail will be per each marker removed.

All damage to the surface of the road caused by pavement marking removal shall be repaired by the Contractor at his expense.

Part 400 add the following new Section:

SECTION 461

PAINTED PAVEMENT MARKINGS

461.1 DESCRIPTION:

The work under this section shall consist of cleaning and preparing the pavement surface, furnishing all materials, experienced supervision, labor, equipment, tools, transportation, supplies and applying white or yellow, water-borne, lead-free, rapid-dry traffic paint and reflective glass beads at the locations and in accordance with the details shown on the plans, MUTCD, the requirements of these specifications, or where determined by the Engineer.

461.2 MATERIALS:

461.2.1 Pavement Marking Paint:

(A) General: All material used in the formulation of the pavement marking paint shall meet the requirements herein specified. Any materials not specifically covered shall meet the approval of the Engineer.

Certificates of Compliance shall be submitted for each lot or batch of paint prior to its use. A Certificate of Analysis for the heavy metal concentration in glass beads shall be furnished to the Engineer prior to their use.

(B) Composition Requirements: The pavement marking paint shall be a ready-mixed, one component, water-borne lead-free traffic line paint, of the correct color, to be applied to either asphaltic or portland cement concrete pavement. The composition of the paint shall be a cross link polymer emulsion equivalent to or better than PervoPlastic™ 6050 Series, acceptability of proposed equivalency to be determined by the Engineer. The marking paint shall be a pigmented water-borne paint containing all the necessary co-solvents, dispersant, wetting agents, preservatives and all other additives, so that the paint shall retain its viscosity, stability and all of the properties as specified herein. The manufacturer shall certify that the product does not contain mercury, lead, hexavalent chromium, toluene, chlorinated solvents, hydrolyzable chlorine derivatives, ethylene-based glycol ethers and their acetates, and not any carcinogen, as defined in 29 CFR 1910.1200. Lead content shall not exceed 0.06 percent of weight of the dry film, and the test for chromium content shall be negative.

No glass beads will be allowed in the pavement marking paint. Glass beads will be applied after the paint has been applied.

(C) Manufacturing Formulations: The manufacturer shall formulate the pavement marking paint in a consistent manner and notify the Engineer of any change of formulation. The formulation of the paint shall be determined by the manufacturer. It will be the manufacturer's responsibility to formulate paint which will meet the quantitative and qualitative requirements of this specification. Any change in the formulation of the paint must be approved by the Engineer.

(D) Quantitative Requirements of Mixed Paints:

	White	**Yellow**
Pigment: percent by weight, ASTM D3723, allowable variation from qualifying sample	± 2.0	± 2.0
Non-volatile Content: percent by weight, ASTM D2369, allowable variation from qualifying sample	± 2.0	± 2.0
Viscosity: Krebs Units at 77º ± 1°F, ASTM D562	80 - 95	80 - 95
Weight per Gallon pounds per gallon at 77º ± 1°F, ASTM D1475, allowable variation from qualifying sample	± 0.3	± 0.3
Vehicle Composition: Vehicle Infrared Spectra, ASTM D2621, allowable variation from qualifying sample	None	None
pH: ASTM E70, allowable variation from qualifying sample	± 1.0	± 1.0
Fineness of Dispersion: HEGMAN, minimum, ASTM D1210	3.0	3.0
Volatile Organic Compounds: pounds per gallon of paint, maximum, ASTM D3960 according to 7.1.2.	2.1	2.1
Flash Point: °F, minimum, ASTM D93, Method A	100	100
Dry Time to No Pick Up: with no beads, minutes, maximum ASTM D711	10	10
Dry Through Time:		

	White	Yellow
minutes, ASTM D1640 except no thumb pressure is used when thumb is rotated 90 degrees on paint film	20	20
Flexibility: TT-P-1952D	Pass	Pass

(E) Qualitative Requirements:

(1) Color of Yellow Paint: The color of the yellow paint shall closely match Federal Standard 595b, Color No. 33538. The color shall be checked visually, and will be checked against Tristimulus Values for the color according to Federal Test Method Standard No. 141.

(2) Dry Opacity: Dry opacity for the paint will be determined using a black-white Leneta Chart, Form 2C Opacity and a Photovolt 577 Reflectance Meter or equal. Using a 10-mil gap doctor blade, a film of paint is drawn down, covering both black and white portions of the chart. The film shall be allowed to dry 24 hours. After calibrating the Reflectance Meter according to the manufacturer's instructions, measure the reflectance over the white and black portions with the green Tristimulus filter. Dry Opacity is calculated as follows:

$$\text{Dry Opacity} = \frac{\text{Reflectance over black}}{\text{Reflectance over white}}$$

Dry Opacity for both white and yellow paint shall be a minimum 0.90.

(3) Yellowness Index: Yellowness Index for white paint will be determined as described for dry opacity, only use a 15-mil gap doctor blade to draw down the paint. After 24 hours for drying, measure the reflectance of the paint film, using the green, blue, and amber Tristimulus filters. Calculate the Yellowness Index as follows:

$$\text{Yellowness Index} = \frac{\text{Amber} - \text{Blue}}{\text{Green}} \times 100$$

Yellowness Index for the white paint shall be a maximum of 10.

(4) Reflectance: Reflectance for both white and yellow paint will be determined using the same 15-mil drawdown film as for the Yellowness Index. For white paint the same sample may be used for both the Yellowness Index and Reflectance. Measure the reflectance of the paint film using the green Tristimulus filter. Reflectance for the white paint shall be a minimum of 85. Reflectance for the yellow paint may range from 42 to 59, inclusive.

(5) UV Color Durability: UV Color Durability shall be determined using a QUV Weatherometer, with Ultra Violet Light and Condensate Exposure according to ASTM G53, for 300 hours total. The repeating cycle shall be four hours UV exposure at 60 °C followed by four hours condensate exposure at 40 °C. After 300 hours of exposure, the Yellowness Index for white paint shall not exceed 12, and yellow paint must still match Federal Standard 595b, Color No. 33538.

(6) Static Heat Stability: To determine static heat stability for the paint, place one pint of paint in a sealed can and heat in an air circulation oven at 120º ±1º F for a period of one week. Remove the paint from the oven and check the viscosity in Krebs Units at 77º ±1º F according to ASTM D562. The viscosity measured must be in the range from 68 to 90, inclusive. Also, check for any signs of instability.

(7) Heat-Shear Stability: To determine heat-shear stability for the paint, one pint of the paint is sheared in a Waring Blender at high speed to 150° F. The blender should have a tight fitting lid taped onto it to minimize volatile loss. When the paint reaches 150° F, stop the blender, immediately pour the paint into a sample can, and apply a cover to seal the can. Let the paint cool overnight and examine for jelling or other signs of instability. Measure viscosity in Krebs Units at 77º ±1º F according to ASTM D562. The viscosity measured must be in the range from 68 to 95 inclusive. If not within the upper limit, run total solids on the sheared paint and adjust solids, if necessary, by adding water to reach the original solids content. If the solids content required adjustment, again check the viscosity of the paint. The viscosity must be in the range from 68 to 95 inclusive.

(8) Scrub Resistance: Scrub Resistance will be determined according to ASTM D2486. Use an appropriate doctor blade to provide a dry film thickness of 3 to 4 mils. Allow the paint to cure for 24 hours. Perform the scrub resistance test at 77º ±1º F and 50 ± five percent humidity. Record the number of cycles to remove the paint film. The number of cycles recorded must be a minimum of 800.

(9) Spraying Properties: The paint shall be applied at a 15-mil wet film thickness in the field. The paint shall show the following properties at ambient temperatures of 50º to 100° F with a paint spray temperature of 150º F, maximum, and 6 to 8 pounds of post-applied glass beads per gallon of paint. Beads shall conform to Section 461.2.2.

(a) Dry to a no-track condition in five minutes or less when the line is crossed over in a passing maneuver with a standard-sized automobile.
(b) Produce a clean-cut, smooth line with no overspray or puddling.

(c) Paint immediately after application shall accept glass beads so that the spheres shall be embedded into the paint film to a depth of 50 percent of their diameter.
(d) Paint when heated to the temperature necessary to obtain the specified dry time, shall show no evidence of instability such as viscosity increase, jelling, or poor spray application.

(10) Freeze-Thaw Properties: The paint viscosity or consistency shall not change significantly when the paint is tested for resistance to five cycles of freeze-thaw according to ASTM D2243.

(11) Road Service Rating: Test stripes of the paint shall be applied transversely across the road, 4" in width and approximately 12 ft. long at a location approved by the Engineer.

Wet film thickness of the test stripes shall be approximately 15-mils as determined according to ASTM D4414 and ASTM D713 prior to test stripe application. To aid in obtaining the correct film thickness, a length of roofing paper placed by the side of the road can be used. Place a rigid metal test panel on the roofing paper in the path of a test line. Immediately after the test line is applied by the striper, measure the wet film thickness. If not satisfactory, adjust the spray pressure and repeat until the target wet film thickness is attained. It is important that no glass beads be present that would give a false wet film thickness. When the wet film thickness is correct, apply a test line across a tarred metal test panel. After this, apply another test line across a different tarred metal test panel, this time also adding the beads. These samples are necessary to determine the initial bead retention.

Glass beads conforming to the requirements of Section 461.2.2 shall be applied after the paint has been applied, but during the same striping operation at a rate such that the initial bead retention on the test line is a minimum of 6 pounds of beads per gallon of wet paint. The initial bead retention will be determined analytically by MCDOT concurrently with the determination of the dry paint thickness utilizing tarred metal test panels. The paint shall accept the glass beads so that the spheres are embedded into the paint film to a depth of 50 percent of their diameter. Test stripes will be observed for a period of 180 days from date of application. Paints will be evaluated for wear according to ASTM D913.

After 180 days of service, on a visual rating scale of 0 to 100 percent, paints must have a rating of 92 percent or better to be acceptable. All ratings will be taken in the wheel track area. Glass beads shall show no more than a 30 percent loss after 180 days of test. This will be determined by taking close-up photographs of the paint film and by count determining the average bead loss.

The road service test may be waived at the option of the Engineer or evaluated for a period of time less than 180 days.

(12) Workmanship: Paint shall be free from foreign materials, such as dirt, sand, fibers from bags, or other material capable of clogging screens, valves, pumps, and other equipment used in a paint striping apparatus.

The paint pigment shall be well ground and properly dispersed in the vehicle. The pigment shall not cake or thicken in the container, and shall not become granular or

curdled. Any settlement of pigment in the paint shall result in a thoroughly wetted, soft mass permitting the complete and easy vertical penetration of a paddle. Settled pigment shall be easily redispersed, with minimum resistance to the sidewise manual motion of a paddle across the bottom of the container, to form a smooth uniform product of the proper consistency. If the paint cannot be easily redispersed, due to excessive pigment settlement as described above or due to any other cause, the paint shall be considered unfit for use.

The paint shall retain all specified properties under normal storage conditions for 12 months after acceptance and delivery. The Contractor shall be responsible for all costs and transportation charges incurred in replacing paint that is unfit for use. The properties of any replacement paint, as specified herein, shall remain satisfactory for eight months from the date of acceptance and delivery.

(F) Manufacturing Requirements:

(1) Inspection: The manufacturer of the paint shall advise the Engineer when paint is to be manufactured, shall furnish the Engineer free access to all parts of the plant involved in the paint manufacture, and shall furnish every reasonable facility for sampling both the paint and the raw materials during the process of manufacturing.

All materials used in formulation shall meet the requirements herein specified. Any materials not specifically covered shall meet the approval of the Engineer.

All manufactured paint shall be prepared at the factory ready for application.

When paint is shipped to a distributor or paint applicator who will store the paint prior to its use, the distributor or paint applicator shall furnish the Engineer free access to all parts of the facility where paint is stored and shall furnish every reasonable facility for sampling the paint.

Paint shall normally be sampled at the place of storage either at a warehouse or on the site prior to application of the paint. Application of the paint will not be permitted until the paint has been approved by the Engineer. It is the Contractor's responsibility to notify the Engineer a minimum of 14 working days prior to any traffic painting operation and to allow access at that time for paint sampling at the storage location.

A minimum of one paint sample shall be obtained from each lot of paint.

Check-samples of finished paint while being applied will be taken at intervals as determined by the Engineer.

(2) Testing: All tests will be conducted in accordance with the latest test methods of the American Society for Testing and Materials, Federal Test Method Standard No. 141, and methods in use by the Materials Group, Highways Division, and the Arizona Department of Transportation as specified herein.

Evidence of adulteration or improper formulation shall be cause for rejection.

(3) Packaging: All shipping containers for paint must comply with the Department of Transportation Code of Federal Regulations, Hazardous Materials and Regulation Board, Reference 49 CFR. The container and lids must be lined with a suitable coating so as to prevent attack by the paint or by agents in the air space above the paint. The lining must not come off the container or lid as skins.

Containers shall be colored white, including lids, and containers shall have an identifying band of the appropriate color around and within the top one third of the container.

All containers shall be properly sealed with suitable gaskets, shall show no evidence of leakage, and shall remain in satisfactory condition for a period of 12 months after delivery to a distributor or paint applicator. The Contractor shall be responsible for all costs and transportation charges incurred in replacing paint and containers.

(4) Marking: All containers of paint shall be labeled showing the manufacturer's name, date of manufacture, paint color, product code, manufacturer's batch number, and quantity or weight of paint on both the side of the container and also the lid. Containers shall be clearly marked or labeled Rapid or Fast Dry lead-free Water-Borne Traffic Paints.

All containers of paint shall be labeled to indicate that the contents fully comply with all rules and regulations concerning air pollution control in the State of Arizona, Maricopa County.

The manufacturer of the paint shall be responsible for proper shipping labels with reference to whether the contents are toxic, corrosive, flammable, etc., as outlined in the U.S. Department of Transportation, Hazardous Materials Regulations, Reference 49 CFR.

(5) Unused Paint: Disposal of unused quantities of traffic paint shall be the responsibility of the Contractor and must meet all applicable Federal regulations for waste disposal. Paint which is saved to be used later shall be packaged as specified previously and shipped to a storage location. Unused paint must be identified on the container. Unused paint may be used on a future project provided the paint still conforms to all specifications contained herein.

461.2.2 Reflective Glass Beads (Spheres): The term "glass bead" shall be synonymous with the term "glass sphere" as used herein.

The beads shall be manufactured from glass of a composition designated to be highly resistant to traffic wear and to the effects of weathering.

The glass beads shall be moisture-proof; contain less than 0.25 percent moisture by

weight; and be free of trash, dirt, or other deleterious materials.

Beads shall be essentially free of sharp angular particles showing milkiness or surface scoring or scratching. Beads shall be water white in color.

(A) Gradation: When tested by the method provided in ASTM D1214, the grade sizes of the beads shall be as follows:

Size of Sieve	Percent Passing
No. 30	100
No. 50	15 - 35
No. 70	0 - 15
No. 100	0 - 5

(B) Roundness: When tested by the method provided in ASTM D1155 Procedure B, beads retained on any screen specified in the gradation requirements shall contain a minimum of 75 percent true spheres.

(C) Index of Refraction: When tested by a liquid immersion method at a temperature of 25 °C, the beads shall have an index of refraction of 1.50 to 1.57.

(D) Specific Gravity: The specific gravity of the beads shall be in the range 2.40-2.60 when tested in accordance with the following procedures:

Place 100 grams in an oven at 110 °C for one hour.

Remove beads and place in a desiccator until the sample is cool.

Remove approximately 60 grams of beads from the desiccator and weigh the sample accurately.

Pour the beads slowly into a clean 100-milliliter graduated cylinder containing 50 milliliters of isopropyl alcohol. Make certain that air is not entrapped among the beads.

The total volume, minus 50, will give the volume of the beads.

Calculate the specific gravity as follows:

$$\text{Specific Gravity} = \frac{\text{Weight of the sample}}{\text{Volume of the sample}}$$

(E) Chemical Stability: Beads which show any tendency toward decomposition, including surface etching, when exposed to atmospheric conditions, moisture, dilute

acids, or alkalis or paint film constituents, may be required to demonstrate satisfactory reflectance behavior, prior to acceptance, under such tests as may be prescribed.

(F) Heavy Metal Concentration: Heavy metal concentration in glass beads shall be as specified in the following table, when tested by an independent laboratory, approved by the Engineer, using EPA Method 3052 and EPA Method 6010B. A Certificate of Analysis shall be furnished to the Engineer prior to use.

Heavy Metal	Concentration
Arsenic	< 75 ppm
Antimony	< 75 ppm
Lead	< 100 ppm

(G) Moisture Proofing: All glass beads shall have a moisture-proof overlay consisting of water repellent material applied during the process of bead manufacture. The beads so treated shall not absorb moisture in storage and shall remain free of clusters and lumps and shall flow freely from dispensing and testing equipment.

The beads shall pass the test for water repellency and free flow using the following equipment:

(1) Test bag: The bag used is approximately 10½" by 17½" after sewing. The material used in the construction of the bag is unbleached cotton sheeting with a thread count of 48 by 48. The material before sewing is approximately 18" by 22". The cloth is folded in half lengthwise and stitched in the shape of an "L" with the short side left open at the top. The material can be obtained from selected manufacturers of cloth and paper packaging. The finished bag may also be obtained from the manufacturer of the glass beads.

Newly fabricated bags must be thoroughly washed with hot water and detergent and rinsed before use to remove the sizing which may be present in the cloth. Subsequent to the initial washing, the bags need only be rinsed clean of beads from previous tests and dried thoroughly before use.

(2) Funnel: The funnel used is a standard laboratory funnel with a top opening diameter of 125 millimeters and a 150-millimeter stem length. The inside diameter of the stem is between nine and 10 millimeters. This funnel is available from most laboratory glassware supply houses, Corning No. 6100 or equal.

(3) Ring Stand and Clamp.

(4) Balance accurate to 0.1 grams.

(5) Distilled water.

(H) MOISTURE TESTING PROCEDURE: Glass beads shall be tested for compliance with specification requirements. Testing shall be conducted at standard conditions of temperature (25 ± one degrees Celsius) and humidity (50 ± five percent Relative Humidity) and shall consist of the following procedure or an approved alternate:

Weigh 900.0 grams of glass beads into a clean, dry, flat-bottomed pan.

Dry beads at 150 °C for two hours.

Cool beads to room temperature (25 ± one degrees Celsius) in a desiccator.

Using the clean, pre-washed bag described under apparatus section, turn the bag inside out so that the sewn seam and seam-allowance are on the outside.

Quantitatively transfer the beads into the inverted cotton bag.

Grasp the gathered top of the bag with one hand and lower the bag into a container of distilled water until the beads are approximately 25 millimeters below the water level. The container shall be of such dimensions that the bag does not contact the bottom or sides during immersion. Each bag shall be immersed individually. Do not allow one bag to contact another if multiple tests are run.

Remove the bag after 30 seconds of immersion time.

Cradle the bottom of the bag uniformly in the palm of one hand and twist the top neck of the bag until the twisted bag is compressed firmly against the beads. Twist until excess water no longer drips from the bag.

After the excess water has been squeezed from the bag, allow the bag to unwind.

Gather the top of the bag and clamp. Suspend the bag on a ring stand or other support such that the bottom or sides of bag do not contact the support.

After a standing time of two hours at room temperature (25 ± one degrees Celsius), remove bag from support. Mix sample thoroughly by holding the bottom seam allowance in one hand and gathered neck of the bag in the other, invert bag and shake up and down five times. Transfer the sample into a clean, dry funnel of the type described under apparatus. If consecutive tests are run, be sure the funnel is clean, dry and free of beads from prior tests.

The entire sample shall flow through the funnel without stoppage.

At the start of the test only, it is permissible to lightly tap the stem of the funnel to initiate flow.

Small quantities of beads which have adhered to the side of the funnel or stem shall not be cause for failure.

461.3 CONSTRUCTION

461.3.1 Equipment: The traffic paint and beads shall be placed on the pavement by a spray-type, self-propelled pavement marking machine except that temporary striping during construction may be placed with other equipment designed for application of paint and beads with the approval of the Engineer.

The application equipment to be used on roadway installation shall have, as a minimum, the following characteristic and/or apparatus:

The machine shall be capable of applying clear-cut lines of the width specified on the project plans.

The machines shall be equipped with a mechanical device capable of placing a broken reflectorized line with a 10 foot painted segment and a 30-foot gap.

The machine shall be equipped with an air-operated glass bead drop-in dispenser controlled by the spray gun mechanism.

A glass bead dispenser which is capable of placing the glass beads into the paint line as the paint is applied to the pavement shall be used. This dispenser shall provide satisfactory marking and delineation.

461.3.2 Application

(A) Pavement Surface: Pavement markings shall not be applied to any new asphalt pavement surface within the first 72 hours after pavement placement or after the placement of a surface treatment. Pavement markings shall be applied when the pavement surface is dry and the weather is not foggy, rainy, or otherwise adverse to the application of markings. The surface shall be free from excess asphalt or other deleterious substances before traffic paint, beads or primer are applied. The Contractor shall remove dirt, debris, grease, oil, rocks or chips from the pavement surface before applying markings. Any area that cannot otherwise be satisfactorily cleaned shall be scrubbed with a biodegradable chemical. The method of cleaning the pavement surface and removal of detrimental material is subject to approval by the Engineer and shall include sweeping and the use of high-pressure air spray.

(B) Temperature Conditions: Painting shall not be performed when the atmospheric temperature is below 50° F when using water-borne paint, nor when it can be anticipated that the atmospheric temperature will drop below said 50° F temperature during the drying period. Water-borne paints shall not be applied if rain is expected within one hour of its application, unless otherwise approved by the Engineer. Water-borne paint shall not be heated to a temperature greater than 150° F to accelerate drying.

(C) Placement Locations: The placing of traffic markings shall be done only by personnel who are experienced in this work. Pavement markings shall be positioned as defined on the plans and in the specifications. When it becomes necessary for proper installation, the Engineer may revise individual marking locations as necessary.

When the use of temporary chip seal pavement markers have been approved for use they shall be augmented by spot marks. Temporary chip seal pavement markers shall be collected and disposed of by the Contractor prior to the final inspection.

The Contractor shall spot mark the entire project at 10-foot intervals in conformance with the striping plans. Removal of existing pavement markings shall be completed prior to the spot marking. Upon completion of the spot marking, the Contractor shall notify the Engineer that the project is ready for inspection. County will conduct an inspection after the spot marking is completed, within three working days from notification of Contractor.

Approval of the spot marking shall not relieve the Contractor from obtaining a final inspection. Upon final inspection, if the Engineer decides that more than one coat is required, it will be done at the Contractor's expense.

The final striping inspection will be made by the Engineer within three working days after all pavement markings and markers have been installed.

The Striping in the field may exceed the construction project limits in order to match and/or tie into the existing striping. Contractor shall perform a field inspection and determine if the striping exceeds the construction project limits.

If a conflict exists between actual field conditions and the pavement marking plans, the Contractor shall cease work and notify the Engineer immediately.

(D) Paint Application: The Contractor shall provide the necessary personnel and equipment to divert traffic from the installation area where the work is in progress and during drying time when, in the opinion of the Engineer, such diversion of traffic is necessary.

The volume of paint in place shall be determined by measuring the paint tank with a calibrated rod. At the option of the Engineer, if the striping machine is equipped with air-atomized spray units (not airless) and paint gauges, the volume of paint may be determined by utilizing said gauges.

The quantity of glass reflectorizing beads in place shall be determined by measuring the glass reflectorizing bead tank with a calibrated rod.

The paint shall not bleed, curl, or discolor when being applied to the roadway surface. If bleeding, curling or discoloration occurs, the unsatisfactory areas shall be given additional coats of paint to correct the problem. In the event that the additional coats are not

sufficient, the Engineer will determine what method of correction may be used. Such corrections will be at the Contractor's expense.

The paint shall not be applied over the decorative design in the median.

If a seal is required, sufficient drying time, minimum forty-eight (48) hours, shall be allowed before applying any pavement markings.

After the forty-eight (48) hour drying time has passed and the seal remains tacky, or excessive oil has risen to the roadway surface, a sand blotter shall be applied to absorb the excess oil. If the seal remains tacky, no pavement markings shall be applied.

If a sand blotter is applied after the installation of pavement markings, then all markings affected shall be removed and re-applied at the Contractor's expense.

(E) Tolerances for Placing Paint, Beads, and Primer: The length of painted segment and gap shall not vary more than 6 inches in a 40-foot cycle.

The finished line shall be smooth, aesthetically acceptable and free from undue waviness.

Painted lines shall be 4.0", 8.0", or 12.0" wide as shown on the plans with a tolerance of plus or minus 1/8 inch and shall be placed at a minimum rate of 16 gallons per mile for a solid 4.0 inch line and 4 gallons for a broken 4.0 inch line, based on a 10 foot stripe and a 30 foot gap (40 foot cycle).

New pavement striping shall not vary more than ½ inch in 50 feet from the striping plans. Existing pavement markings requiring re-stripe shall be re-striped to completely cover existing markings within ¼ inch and be within a longitudinal tolerance of 6 inches at the beginning and at the end of each stripe.

Glass reflectorizing beads shall be applied on the wet paint at a minimum rate of 8 lbs. to each gallon of paint.

Wet thickness shall not be less than 15 mils, unless otherwise shown on the plans.

461.4 MEASUREMENT:

Pavement marking paint will be measured by the linear foot along the centerline of the pavement stripe. Skips in dashed lines will not be included in the measurement. Length of pavement markings will be based on 4-inch wide stripe. Measurement for striping with a plan width greater or less than the basic 4 inches as shown on the plans or requested by the Engineer will be made by the following method:

$$\frac{\text{Plan Width of Striping (inches) x Linear Feet}}{\text{4 (inches)}}$$

Painted temporary striping installed in compliance with section 462.3.2 (B) or (B) will be measured and included in the striping quantities.

Symbols, legends, painted medians, painted curbing, and painted islands will be measured by each unit applied. Each legend, regardless of the number of letters, will be considered as a single unit.

No separate measurement will be made for cleaning and preparing the pavement surface, including abrasive sweeping and high-pressure air spray. The cost of disposal of excess materials, cleaning fluids, and empty material containers, will be considered as included in contract items

461.5 PAYMENT:

Pavement striping of the type specified, measured as provided above, will be paid for at the contract price per linear foot for the total length of painted line applied to the nearest foot, which price shall be full compensation for the work complete, including cleaning and preparing the pavement surface and glass beads, as described and specified herein and on the project Plans.

Pavement symbols, legends, painted medians, painted curbing, and painted islands measured as provided above, will be paid for at the contract price for each painted symbol or legend, which price shall be full compensation for the work complete, including cleaning and preparing the pavement surface, and glass beads, as described and specified herein and on the project Plans.

Part 400 add the following new Section:

SECTION 462

THERMOPLASTIC AND PREFORMED PAVEMENT MARKINGS

462.1 DESCRIPTION:

The work under this section shall consist of cleaning and preparing pavement surfaces and furnishing and applying either white or yellow thermoplastic reflectorized pavement markings or preformed pavement markings.

Thermoplastic markings shall use hot sprayed reflectorized thermoplastic material. Screed or extrusion application of thermoplastic may be allowed, if approved by the Engineer, for short application work such as may occur at intersections.

The Contractor shall furnish all materials, supervision, labor, equipment, tools, supplies, and traffic control required to complete the work according to the pavement marking plans, these specifications and the project special provisions.

462.2 MATERIALS:

462.2.1 General Requirements: Only pavement marking materials currently shown on the Arizona Department of Transportation's Approved Products List shall be used. The current Approved Products List is available on the internet.

Certificates of Compliance conforming to the requirements of Section 106 shall be submitted for each lot or batch of thermoplastic reflectorized material or preformed pavement markings prior to its use.

All symbols and legends shall be constructed using preformed pavement markings.

462.2.2 Hot Sprayed Thermoplastic Reflectorized Material: The thermoplastic reflectorized material shall consist of a solid mixture of heat-stable resins, white or yellow pigment, inter-mixed glass beads, filler, and other materials in granular or block form specifically compounded for reflectorized pavement markings to be applied to the pavement in a molten state. The characteristics of the liquefied material shall be such that complete and even coverage of specified areas to the required thickness is provided by the required application method and rate. Upon cooling to normal pavement temperature, this material shall produce an adhered reflectorized marking capable of resisting deformation and wear in the roadway.

The thermoplastic composition shall conform to the following requirements:

Component	**Percent by Weight**	
	White	**Yellow**
Binder (minimum)	20	20
Titanium dioxide (minimum)	10	-----
Yellow Lead-Free Pigment (minimum)	-----	1.5
Reflective glass inter-mix beads	30 - 45	30 - 45
Calcium carbonate or equivalent filler	20 - 42	20 - 42

The filler shall be a white calcium carbonate or equivalent filler with a compressive strength of at least 5.0 ksi.

Titanium Dioxide shall conform to the requirements of ASTM D476 Classification Type II.

The yellow pigment shall be heat resistant and lead free. The type of yellow pigment shall be at the option of the manufacturer provided that the material conforms to all color requirements in a stable and durable fashion as specified herein.

The ingredients of the thermoplastic shall be thoroughly mixed and in a solid block or free flowing granular form. The material shall readily melt into a uniform mixture and be free from all skins, dirt, foreign objects or any other ingredient which would cause bleeding, staining, blotting, or discoloration when applied to bituminous or concrete pavement.

The thermoplastic formulation shall use an alkyd binder. The alkyd binder shall consist of a mixture of synthetic resins, at least one of which is solid at room temperature, and of high boiling point plasticizers. At least one third of the binder composition and no less than eight percent by weight of the entire material formulation shall be solid maleic modified glycerol ester resin or solid maleic modified pentaerythritol ester resin. The alkyd binder shall not contain any petroleum based hydrocarbon resins.

The thermoplastic material shall not exude fumes which are toxic, injurious, or require specialized breathing apparatus when heated to the temperature range specified by the manufacturer for application. The material shall remain stable when held for four hours at this temperature, or when subjected to four reheating cycles, not exceeding a total of four hours, after cooling to ambient temperature. The temperature viscosity characteristics of the plastic material shall remain constant throughout the reheating cycles and shall show like characteristics from batch to batch. There shall be no obvious change in color of the thermoplastic material as a result of reheating, and the color of the material shall not vary from batch to batch.

(A) **Color:** The thermoplastic material, after heating for four hours ± five minutes at 425º F ± 3° F and cooled to 77º F ± 3° F, shall meet the following:

White: Daylight reflectance at 45 degrees - 0 degrees shall be 75 percent minimum.
The color shall match Federal Test Standard Number 595, Color Chip No. 17925.

Yellow: Daylight reflectance at 45 degrees - 0 degrees shall be 45 percent minimum.
The color shall match Federal Test Standard Number 595, Color Chip No. 13538.

(B) **Color Stability:** Using accelerated weathering per ASTM G155, Cycle 1, white color stability shall be measured for no color change after 500 hours of exposure, and yellow color stability shall be measured for no color change after 1000 hours of exposure.

(C) **Retroreflectance:** The white and yellow thermoplastic materials shall have the following minimum retroreflectance values at 86.5 degrees illumination angle and 1.5 degrees observation angle as measured by an LTL-X Delta Retrometer or similar device, within 30 days after application to the roadway surface:

Color	Retroreflectance (millicandelas/m^2/lux)
White	350
Yellow	200

(D) **Water Absorption and Specific Gravity:** The thermoplastic material shall not exceed 0.5 percent by weight of retained water when tested in accordance with the requirements of ASTM D570.

The specific gravity of the material, as determined by Section 16 of AASHTO T 250, shall be between 1.85 and 2.15.

(E) **Bond Strength:** After heating the thermoplastic material for four hours ± five minutes at 425º F ± 3° F, the bond strength to portland cement concrete shall be not less than 0.18 ksi. The bond strength shall be determined in accordance with the procedures specified in Section 7 of AASHTO T 250.

(F) **Cracking Resistance at Low Temperature:** After heating the thermoplastic material for four hours ± five minutes at 425º F ± 3° F, applying to concrete blocks, and cooling to 15º F ± 3° F, the material shall show no cracks when observed from a distance exceeding 1 foot. Testing for low temperature crack resistance shall be in accordance with the procedures specified in Section 8 of AASHTO T 250.

(G) **Impact Resistance:** After heating the thermoplastic material for four hours ± five minutes at 425º F ± 3° F and forming test specimens, the impact resistance shall be not less than 10 inch-pounds when tested in accordance with Section 9 of AASHTO T 250.

(H) **Softening Point:** After heating the thermoplastic material for four hours ± five minutes at 425º F ± 3° F and testing in accordance with ASTM D36, the thermoplastic materials shall have a softening point of 215º F ± 15° F.

(I) **Flowability:** After heating the thermoplastic material for four hours ± five minutes at 425º F ± 3° F, and testing for flowability in accordance with Section 6 of AASHTO T 250, the white thermoplastic shall have a maximum percent residue of 18 and the yellow thermoplastic shall have maximum percent residue of 21.

(J) **Yellowness Index:** The white thermoplastic material shall not exceed a yellowness index of 0.12 when tested in accordance with Section 4 of AASHTO T 250.

(K) **Flowability (Extended Heating):** After heating the thermoplastic material for eight ± one-half hours at 425º F ± 3° F, with stirring the last six hours, and testing for flowability in accordance with Section 12 of AASHTO T 250, the thermoplastic shall have a maximum percent residue of 28.

(L) **Abrasion Resistance:** The abrasion resistance of the thermoplastic material shall be determined by forming a representative lot of the material at a thickness of 1/8 inch on a 4” by 4” square monel panel (thickness 0.05 inch ± 0.001 inch), on which a suitable primer has been previously applied, and subjecting it to 200 revolutions on a Taber Abraser at 77° F, using H-22 calibrated wheels weighted to 0.55 lbs. The wearing surface shall be kept wet with distilled water throughout the test.

The maximum loss of thermoplastic material shall be 0.0011 lbs.

(M) **Flash Point:** The thermoplastic material shall have a flash point not less than 475º F when tested in accordance with the requirements of ASTM D92.

(N) **Storage Life:** The materials shall meet the requirements of this specification for a period of one year from the date of manufacture. The thermoplastic must also melt uniformly with no evidence of skins or unmelted particles for this one-year period. Any material which does not meet the above requirements, or which is no longer within this one year period at the time of application, shall be replaced by the Contractor at no additional cost to the County

(O) **Primer Sealer:** Primer Sealers for use on portland cement concrete or hot mix asphaltic concrete surfaces prior to application of the thermoplastic material shall be either as recommended by the thermoplastic material manufacturer or especially compounded for use with the specified thermoplastic material.

462.2.3 Reflective Glass Beads: Inter-mix and drop-on reflective glass beads shall conform to the requirements of Section 461.2.2, except as noted herein.

The inter-mix beads shall conform to AASHTO M 247, Type 1, and may be coated or uncoated as recommended by the manufacturer. If uncoated beads are used, the thermoplastic formulation shall be configured to minimize settling of the intermix beads when the material is heated and applied.

Drop-on beads shall conform to the gradation requirements of AASHTO M 247 for Type 1 and Type 3 beads.

462.2.4 Preformed Pavement Markings: Preformed pavement markings listed on the Arizona Department of Transportation’s Approved Products List shall be used. Preformed pavement markings shall be weather resistant and shall show no appreciable fading, lifting, shrinkage or significant tearing, roll back, loss of skid resistance, or signs of poor adhesion throughout the useful life of the marking. The markings shall be capable of conforming to pavement contours, breaks and faults through the action of traffic at normal pavement temperatures.

Preformed thermoplastic markings shall be supplied at a minimum thickness of 0.090 inches (90 mils).

Preformed plastic film or tape with pressure sensitive adhesive shall be a minimum of 0.065 inch thick excluding any adhesive.

462.3 CONSTRUCTION:

Thermoplastic and preformed pavement markings shall not be used on chip sealed surfaces. Preformed heat-set markings may be used on chip sealed surfaces when approved by the Engineer prior to application.

462.3.1 Location and Pre-Marking: Pavement markings shall be positioned as defined on the plans and specifications. If a conflict exists between actual field conditions and the pavement marking plans, the Contractor shall cease work and notify the Engineer immediately. The Engineer may revise individual marking locations as necessary.

The Contractor shall spot mark the entire project at 10-foot intervals in conformance with the striping plans. Upon completion of the spot marking, the Contractor shall notify the Engineer that the project spot pre-marking is ready for inspection. The County will conduct an inspection within three working days from the Contractor notification.

When the use of temporary chip seal pavement markers have been approved for use they shall be augmented by spot marks. Temporary chip seal pavement markers shall be collected and disposed of by the Contractor prior to the final inspection.

The field striping requirements may exceed the construction project limits to correctly match into the existing striping. The Contractor shall perform a field inspection with the pavement markings inspector to determine locations for matching the existing striping.

Approval of the spot marking shall not relieve the Contractor from obtaining a final inspection. Upon final inspection, if the Engineer decides that more than one coat is required, it will be done at the Contractor's expense.

The Contractor shall mark the proposed location of all legends and symbols and have their location approved by the pavement markings inspector prior to installation.

The final striping inspection will be made by the Engineer within three working days after all pavement markings and markers have been installed.

462.3.2 Material Curing Prior to Application of Markings:

(A) Preservative or Fog Seal: Pavement markings shall not be applied to any new preservative or fog seal within the first forty-eight (48) hours applying the preservative or fog seal.

After the forty-eight (48) hour drying time has passed and if the seal remains tacky, or excessive oil has risen to the roadway surface, a sand blotter shall be applied to absorb the

excess oil. The Contractor shall sweep the roadway surface free of sand prior to pavement marking applications.

If a seal or blotter is applied after the installation of pavement markings, any pavement markings affected by the seal or blotter shall be removed and re-applied at the Contractor's expense.

(B) Asphalt Pavement: Thermoplastic pavement markings shall not be applied to any new asphalt pavement surface within the first 72 hours after pavement placement or after the placement of slurry seal, microsurfacing, or other surface treatment. During hot weather if the Engineer determines that the asphalt surface is prone to tracking, the Engineer may direct the contractor to provide temporary painted pavement markings complying with Section 461.

(C) Asphalt-Rubber Pavement: Thermoplastic pavement markings shall not be applied to any new asphalt-rubber pavement surface within the first 30 days after pavement placement. The Contractor shall install painted temporary striping at locations where thermoplastic striping is required. Painted temporary striping shall comply with section 461 except temporary striping may be applied 24 hours after placement of the new asphalt-rubber pavement.

(D) Slurry Seal, Microsurfacing and Other Surface Treatments: Thermoplastic pavement markings shall not be applied to any new slurry seal, microsurfacing or other surface treatment within the first 30 days after placement. The Contractor shall install painted temporary striping at locations where thermoplastic striping is required. Painted temporary striping shall comply with section 461 except temporary striping may be applied 24 hours after placement of the new slurry seal, microsurfacing or other surface treatment.

(E) Preformed Pavement Markings for legends, arrows, and other symbols may be applied 24 hours after placement of asphalt concrete pavement and asphalt-rubber asphalt concrete pavement. Preformed pavement markings for legends and symbols shall be installed when temporary painted striping is installed.

462.3.3 Pavement Surface Preparation: The Contractor shall remove all dirt, grease, oil or other detrimental material from the road surface prior to application of stripes, arrows, legends or symbols.

The method of cleaning the surface is subject to approval by the Engineer and shall include sweeping and the use of high-pressure air spray. The method of surface preparation shall also be in accordance with the marking material manufacturer's recommendations. Loose material including all grindings and obliterated markings shall be removed from the pavement surface and disposed of properly.

462.3.4 Application: Pavement markings shall not be installed until after the location has been approved by the pavement markings inspector.

Thermoplastic markings shall not be applied over concrete pavers or decorative asphalt.

(A) Application of Hot Sprayed Thermoplastic: Preparation and application equipment shall be in accordance with the plans and specifications, and shall conform to the recommendations of the materials manufacturer.

The Contractor shall make daily maintenance and operation inspections of all application equipment to ensure that it is operable within the requirements of the specifications. The Contractor shall inform the Engineer of any equipment breakdowns, intermittent malfunctions, or other conditions that may impact the proper application of specified markings. Any equipment judged to be unsuitable by the Engineer shall be repaired or replaced.

Equipment: The equipment used to install hot sprayed applied thermoplastic material shall be constructed to provide continuous uniform heating to temperatures exceeding 400° F while mixing and agitating the material. The heating mechanism of the kettle shall be equipped with a heat transfer medium consisting of oil or air. The burner flame shall not directly contact the material vessel surface. The mixing and agitating mechanism shall be capable of thoroughly mixing the material at a rate which ensures constant uniform temperature distribution.

The kettle shall provide for uniformly melting and heating the thermoplastic material. The kettle shall be equipped with two temperature gauges: one to indicate the temperature of the oil or air heat transfer medium, and the other to indicate the temperature of the thermoplastic material. The kettle shall also be equipped with an automatic thermostatic control device that allows for positive temperature control to prevent overheating or under heating of the material.

The heating kettle and application equipment shall meet the requirements of the National Fire Underwriters and the National Fire Protection Association and of the state and local authorities. Thermoplastic melting units, trucks or trailers, shall be equipped with foam-type fire extinguishers suitable for application to thermoplastic material that is at the flash point.

The conveying portion of the equipment, between the main material reservoir and the line dispensing device, shall be configured to prevent accumulation. All parts of the equipment which will come in contact with the material shall be constructed for easy accessibility for cleaning and maintenance. The equipment shall operate so that all mixing and conveying parts, including the line dispensing device, will maintain the material at the plastic temperature. The use of pans, aprons or similar appliances which the dispenser overruns will not be permitted. The equipment shall provide for varying traffic marking application widths.

All melting and application equipment shall have functioning and calibrated temperature sensing devices to verify that temperature requirements are being met. Upon request of

the Engineer, the Contractor shall provide proof that the temperature sensing devices and verification thermometers are fully functional.

The application equipment to be used on roadway installations shall consist of either truck-mounted units, motorized ride-on equipment, or manually pushed equipment, depending on the type of marking required.

The truck-mounted or motorized ride-on units used for center lines, lane lines, gore lines, and edge lines shall consist of a mobile self-contained unit carrying its own material capable of operating at a minimum speed of five miles per hour while applying striping, and shall be sufficiently maneuverable to install curved and straight lines, both longitudinally and transversely.

The truck shall be equipped with high pressure air spray jets in front of the pavement marking material applicators to remove loose matter from the pavement surface where the marking material is to be applied.

Hand applicator equipment, to be used for all other roadway installations, shall be either self-contained melter application units or reservoir application units that are filled from a separate melter unit. Both types of units shall be equipped to maintain and measure the required application temperatures. The hand applicator equipment shall be sufficiently maneuverable to install symbols and legends, and curved and straight lines, both longitudinally and transversely.

The application equipment shall be so constructed as to assure continuous uniformity in the dimensions of the stripe. The applicator shall provide a means for cleanly cutting off square stripe ends and shall provide a method of applying "skip" lines. The equipment shall be constructed so as to provide varying widths of traffic markings. The application equipment shall be mobile and maneuverable to the extent that straight lines can be followed and normal curves can be made in a true arc. The equipment operator shall be located in such a position as to enable full visibility of the striping apparatus.

A glass bead top dressing shall be applied to the completed thermoplastic stripe by an automatic glass bead dispenser attached to the striping machine in such a manner that the beads are applied to the molten thermoplastic material immediately after it has been applied. The bead dispenser shall use pressure type spray guns which will embed the beads into the stripe surface to at least one-half of the bead diameter. The bead dispenser shall be equipped with an automatic cut-off synchronized with the cut-off of the thermoplastic material.

If screed or extrusion application of thermoplastic is allowed by the Engineer for short applications, the screed/extrusion application method shall be used wherein one side of the shaping die is the pavement and the other three sides are contained by equipment suitable for heating or controlling the flow of material. The equipment shall form an extruded line which shall be uniform in shape having clear and sharp dimensions.

For hand liner applications, a gravity bead dispenser may be allowed by the Engineer if it properly gauges and dispenses the correct amount of glass spheres.

Materials Selection and Compatibility: All hot sprayed applied thermoplastic material, drop-on glass beads, and primer-sealer will be inspected and approved by the Engineer prior to their application. The Contractor shall also provide samples of said materials if requested by the Engineer.

All materials shall be properly packaged and stored. Each container to be used on the project shall be clearly labeled to indicate the following information:

- Nature, type, and formulation of the material;
- Manufacturer, batch number, and date of manufacture;
- Application requirements and constraints; and
- Compatibility requirements and constraints, particularly those pertaining to equipment, storage, and other materials to be used.

Incompatible materials shall not be used together. The Contractor shall not combine alkyd and hydrocarbon materials in preparation or application equipment. The Contractor shall completely clean preparation and application equipment when materials are changed.

The Contractor shall dispose of excess materials, cleaning fluids, and all empty material containers at a site in conformance with the state and federal requirements.

Pavement Temperatures: The air and road surface temperature at the time of application of hot sprayed applied thermoplastic shall not be less than 55° F, and the pavement surface shall be absolutely dry. If at any time during marking operations the air or pavement temperature falls below these requirements, all hot sprayed applied thermoplastic marking operations shall stop.

The Contractor shall measure pavement surface temperatures one half hour prior to the start of the striping installation activities and as deemed necessary by the Engineer until the end of the application period. For elevation changes greater than 1000 feet temperature readings at the highest elevation shall govern unless otherwise requested by the Engineer. The lowest temperature so measured shall govern, unless otherwise requested by the Engineer. The temperature measurements shall be recorded in a log book and provided to the Engineer when required. The pavement surface temperature shall be measured with a standard surface temperature thermometer or a non-contact infrared thermometer.

Thermoplastic Application: The hot sprayed applied thermoplastic pavement marking material shall be extruded or sprayed onto the pavement surface at a material temperature between 385° F and 415° F, depending on the manufacturer's recommendations, the ambient air and pavement temperatures, and the nature of the

pavement surface. The Contractor shall verify temperature requirements with a non-contact infrared thermometer as directed by the Engineer.

The hot sprayed applied thermoplastic material temperatures shall not exceed 450° F. Material temperatures exceeding 440° F shall be allowed for short periods of time; however, in no case shall the material be held for more than four hours at temperatures above 440° F. Total heating time for any batch of material shall not exceed six hours. The Contractor shall note in the temperature log the time when each batch of thermoplastic material is first heated. The start of heating time shall also be marked on the side of the kettle to which it applies.

Specified temperature requirements shall be maintained at all times during application of applied material. The Contractor shall monitor hot sprayed applied material temperature at thirty-minute intervals, unless otherwise requested by the Engineer, and maintain a log of temperature readings taken. Readings shall be taken at the melting kettle or the application outlet point, as determined by the Engineer.

The Contractor shall minimize the thermoplastic material remaining in the kettle at the end of the work day and shall blend a minimum of 80 percent fresh material the start of each day. During project delays, the Contractor may transfer heated thermoplastic material into approved containers for later re-use, subject to specified limits on total acceptable heating time for each batch.

Drop-on glass beads shall be mechanically deposited into the molten hot sprayed thermoplastic material immediately after the thermoplastic marking is applied, using a double drop method. Each drop shall be comprised of a minimum of six pounds of glass beads per 100 square feet of line (200 linear feet of six-inch stripe). One drop shall be Type 1 glass beads and the other drop shall be Type 3 glass beads. The contractor shall determine which type of glass bead is to be applied in each drop; however, both types shall be used. Double drop methods using all Type 1 or Type 3 beads will not be allowed.

The dispensers shall evenly distribute the beads in the thermoplastic material. Both Type 1 and Type 3 glass beads shall be embedded in the surface of the thermoplastic to a depth of between 50 and 60 percent of the bead diameter. If the glass beads do not adhere to the thermoplastic marking, operations shall be stopped until the problem has been corrected. All markings which do not meet the retroreflectance requirements of Section 462.2.2 (C), as determined by the Engineer, shall be removed by the contractor and replaced at no additional cost to the Department.

Unless otherwise specified, all hot sprayed and extruded thermoplastic pavement markings shall be 0.090 ± 0.002 inches thick. The thermoplastic thickness shall be uniform and consistent throughout the total length of the marking project.

The Contractor shall perform periodic spot checks of thermoplastic material to verify that the required thickness has been attained. Random spot checks of the thermoplastic

thickness will be made by the Engineer to ensure conformance with the required criteria. Suggested spot check procedures include the following:

Wet: Thickness can be field tested immediately after the thermoplastic marking is applied by inserting a thin, graduated machinist rule or similar instrument into the molten thermoplastic to the depth of the pavement surface. The thickness is then determined visually by noting on the scale the depth of the penetration or coating of the instrument.

Dried: Thickness can be field tested by placing a small flat sheet of metal with a known thickness immediately ahead of the striping apparatus. After striping, remove the sample and use a suitable measuring device, such as a caliper or micrometer, to determine the thickness of the dried marking.

Longitudinal lines shall be offset at least 6 inches clear from construction joints unless otherwise requested by the Engineer.

The finished thermoplastic line shall have well defined edges and be free from waviness. Lateral deviation of the thermoplastic line shall not exceed 1.0 inches in 100 feet. The longitudinal deviation of a painted segment and gap shall not vary more than 6 inches in a 40-foot cycle. The actual width of line shall be within the limits specified in the following table, according to the width of stripe called for on the plans:

Plan Width	Actual Width
4 inches	4 to 4½ inches
8 inches	8 to 9 inches
Over 8 inches	± 1.0 inches

After application and sufficient drying time, the thermoplastic marking shall show no appreciable deformation, cracking, or discoloration under local traffic conditions with air and road temperature ranging from -10º F to 180° F. The drying time shall be defined as the minimum elapsed time, after application, when the thermoplastic pavement markings shall have and retain the characteristics required herein, and after which normal traffic will leave no impression or imprint on the newly applied marking. When applied at a temperature range of 400º F ± 15º F and thickness of 90 mils, the material shall set to bear traffic in not more than two minutes when the air and road surface temperature is approximately 50º F ± 3° F, and not more than ten minutes when the air and road surface temperature is approximately 90º F ± 3° F. The Engineer may conduct field tests in accordance with ASTM D711 to verify actual drying times.

(B) Portland Cement Concrete Pavement: When pavement markings are to be applied to new portland cement concrete pavement, any curing compound present shall be removed by means of a high-pressure water jet followed by sweeping and high-pressure air spray. The concrete curing compound shall be removed at least two inches beyond the entire perimeter of each marking to be installed.

At the time of application of primer-sealer and thermoplastics, the road surface shall be absolutely dry with no detectable or measurable surface or near-surface dampness. If precipitation or other surface wetting is imminent, all marking operations shall be stopped. If any surface dampness is detected during marking activities, marking operations shall be stopped until the pavement dries. If hot-applied thermoplastic marking blisters upon application, marking operations shall be stopped until the cause, potentially including subsurface moisture is determined and corrected.

Primer Application on old and new portland cement concrete pavement, a primer-sealer shall be used if recommended by the manufacturer of the marking material. The primer-sealer shall be applied at the manufacturer's recommended application rates prior to placing the pavement marking material. The primer-sealer shall be allowed to set up for the manufacturer's specified cure or evaporation time, and shall be free of solvent and water when the pavement marking material is applied.

The thermoplastic material shall be applied to primed pavement surfaces within the working time specified by the primer-sealer and thermoplastic materials manufacturers. If the primed surfaces are not marked within these time limits, the Contractor shall re-prime the surfaces as required by the manufacturer at no additional cost to the Department. If an epoxy primer is used, the thermoplastic application shall be completed before the epoxy has cured.

Improper primer-sealer application may result in bond failure between the thermoplastic and the pavement surface and may cause the thermoplastic surface to pinhole or blister. Should these conditions occur, application operations shall stop until the cause is determined and corrected. All such defective markings shall be removed and replaced at no additional cost to the Department.

(C) Application of Preformed Pavement Markings: All markings shall be applied in accordance with the manufacturer's recommendations. Preformed pavement markings shall not be applied over other markings or old paint unless allowed by the manufacturer and approved by the Engineer prior to application.

Adhesive markings shall not be installed on the approach to an intersection within 50’ of the near edge of pavement of the intersected road.

The contractor shall use butt splices only and shall not overlap the marking material.

The contractor shall immediately correct all misalignments when so ordered by the Engineer. The misaligned portions shall be removed and reinstalled.

All areas marked with preformed pavement markings shall be ready for traffic immediately after application.

462.4 MEASUREMENT:

Thermoplastic pavement markings of longitudinal and transverse lines, such as edge lines, lane lines, gore lines, cross-walks and stop bars, will be measured by the linear foot along the center line of the pavement stripe and will be based on a 4 inch wide stripe. Measurement for striping with a plan width greater or less than the basic 4 inches as shown on the plans or requested by the Engineer will be made by the following method:

$$\frac{\text{Plan Width of Striping (inches) x Linear Feet}}{\text{4 (inches)}}$$

No measurement will be made of the number of linear feet of skips in the dashed line.

Double marking lines, consisting of two 4-inch wide stripes will be measured as two individual marking lines. Crosswalk lines, stop bars, stop lines, gore lines, cross hatch lines, and chevron lines will be measured for centerline length and adjusted for widths other than 4 inches as defined above.

Pavement symbols and legends will be measured by each unit applied. Each pavement symbol and each legend, as shown on the Plans, will be considered a unit. The railroad symbol includes the cross bars, both R, and the transverse lines.

No separate measurement will be made for cleaning and preparing the pavement surface, including abrasive sweeping and high-pressure air spray. The cost of disposal of excess material, cleaning fluids, and empty material containers will be considered as included in the contract items.

Removal of curing compound from new portland cement concrete pavement and the application of primer-sealer applied to old or new portland cement concrete pavement, prior to application of thermoplastic striping or pavement legends and symbols, shall be measured by the linear foot or unit each, respectively, depending on the type of marking to be placed and in accordance with the contract fee schedule and special provisions.

462.5 PAYMENT:

The accepted quantities of pavement symbols and legends, measured as provided above, will be paid for at the contract unit price, complete in place including pavement surface preparation.

The accepted quantities for removal of curing compound from portland cement concrete pavement and the application of primer-sealer, measured as provided above, will be paid for at the contract unit price.

The accepted quantity of striping, rounded to the nearest foot, will be paid for at the contract unit price, complete in place including pavement surface preparation.

Part 400 add the following new Section:

SECTION 463

RAISED PAVEMENT MARKERS

463.1 DESCRIPTION:

The work under this section shall consist of cleaning and preparing the pavement surface; furnishing all materials, equipment, tools and labor; and placing raised pavement markers of the type specified at the locations and in accordance with the details shown on the plans and the requirements of these specifications.

463.2 MATERIALS:

463.2.1 General: Certificates of Compliance for raised pavement markers and adhesive shall be submitted to the Engineer at least 10 days prior to use. A minimum of one sample per lot per type of marker shall be made available to the Engineer for compliance testing.

The base of the pavement markers shall be free from glass glaze or from substances which may reduce its bond to the adhesive. The base shall be flat and it's deviation from a flat surface shall not exceed 0.05 inches.

463.2.2 Reflective Pavement Markers: Reflective markers shall be non-adhesive with an adhesive surface. Pavement markers shall be both wet and dry retro-reflective, impact resistant, abrasion resistant, water resistant and have molded-in body colors.

Reflective pavement markers shall be of the following type:

Type D	Yellow, two-way
Type G	Clear, one-way
Type H	Yellow, one-way
Type BB	Blue, two-way

Reflective pavement markers shall be of the prismatic reflector type consisting of a polycarbonate body and a polycarbonate lens with built-in micro-cube corners. The lens shall have a protective hard-coat.

The exterior surface of the shell shall be smooth and shall contain one or two prismatic reflector faces of the color specified.

When illuminated by an automobile headlight, the color of the reflectors shall be an approved clear or yellow as designated. Reflectors not meeting the required color may be rejected.

Permanent reflective pavement markers will be tested for compressive strength, abrasion resistance and specific intensity. Permanent reflective pavement markers shall have thin

untempered glass or other abrasion resistant material bonded to the prismatic reflector face to provide an extremely hard and durable, abrasive resistant reflector surface.

The area covered by the glass, or other abrasion resistant surface, shall not be less than (3) three square inches.

The strength by compressive loading shall be at least 2,000 lbs. for both permanent and temporary reflective pavement markers.

The original specific intensity of each reflecting surface for both temporary and permanent reflective markers shall not be less than the following:

Reflectance	**Specific Intensity: candelas/foot-candle**		
	Clear	**Yellow**	**Red**
0 Degrees Incidence	3.0	1.8	0.75
20 Degrees Incidence	1.2	0.72	0.30

Permanent reflective pavement markers shall be subject to an abrasion resistance test as follows:

Steel Wool Abrasion Procedure: Form a 1.0 inch diameter flat pad using No. 3 coarse steel wool per Federal Specification FF-W1825. Place the steel wool pad on the reflector lens face. Apply a force of 50 lbs. and rub the entire lens surface 100 times. After the lens surface has been abraded, the specific intensity of each clear and yellow reflective surface shall be not less than that required above for the original specific intensity.

463.2.3 Non-Reflective Pavement Markers and Reflectorized Dagmars:
Non-reflective pavement markers shall be, Type A - white

Reflectorized Dagmars shall be of the following types:

Type J white
Type JY yellow

Non-reflective pavement markers and reflectorized dagmars shall consist of a heat-fired, vitreous ceramic base and a heat-fired, opaque glazed surface which will produce the required properties. Markers shall be produced from any suitable combination of intimately mixed clays, shales, flints, feldspars, or other inorganic material which will meet the properties herein required. Markers shall be thoroughly and evenly matured and free from defects which will affect appearance or serviceability.

The top surface of the marker shall be in reasonably close conformity with the configuration shown on the plans. Markers shall be convex and the radius of curvature shall be between 3.5 inches and 6.0 inches, except that the radius of the ½ inch nearest the edge may be less. All edges shall be rounded and any change in curvature shall be

gradual. The top and sides shall be smooth and free of mold marks, pits, indentations, air bubbles, or other objectionable marks or discolorations.

Non-reflective pavement markers and dagmars shall meet the following requirements:

Glaze Thickness, minimum, inches	0.005
Moh Hardness, minimum	6
Directional Reflectance (White Only), minimum Glazed Surface Body of Marker	 75 70
Yellowness Index (White Only), maximum Glazed Surface Body of Marker	 0.07 0.12
Color (Yellow Only) Purity, percent, range Dominant Wave Length, mu, range Total Lummous Reflectance (Y valve), minimum	 75 - 96 579 - 585 0.41
Compressive Strength, pounds, minimum	1,500
Water Absorption, percent, maximum	2.0
Autoclave	Glaze shall not spall, craze or peel

Reflectorized dagmars shall have encapsulated lens reflectors conforming to standard manufacturing practices.

463.2.4 Bituminous Adhesive:

Crafco, Incorporated
6975 West Crafco Way
Chandler, Arizona 85226

Materials by manufacturers other than the above listed may be used when approved by the Engineer prior to use.

463.3 CONSTRUCTION:

Raised pavement markers shall be installed after the permanent pavement striping has been completed and approved.

The portion of the highway to which the markers are to be attached shall be free of dirt, curing compound, grease, oil, moisture, loose or unsound layers and any other material which could adversely affect the bond of the adhesive. The pavement must be clean and

dry. If rainfall or other pavement wetting event occurs, the pavement shall be allowed to dry for at least twenty-four (24) hours before proceeding with the installation of markers.

Markers shall not be placed on asphalt that is cracking or showing signs of failure.

Chip Seal surfaces shall be swept of excess aggregate and open to traffic for 30 days prior to installation of the markers. Markers shall not be installed on chip seal surfaces with large, void spaces and/or loose aggregate with a weak bond to the underlying road surface.

Slurry Seal and Fog Seal surfaces shall be allowed to cure at least twenty-four (24) hours prior to placement of the markers. Excess sand applied to soak up surface emulsions must be swept clean prior to installation of the markers.

The method of cleaning the pavement surface and removal of detrimental material is subject to approval by the Engineer and shall include sweeping and the use of high-pressure air spray. On portland cement concrete pavement and old asphalt concrete pavements, cleaning shall be accomplished by water blasting, followed by sweeping and/or air blowing. Newly placed asphalt concrete pavement need not be water blasted unless, in the opinion of the Engineer, the surface is contaminated with materials that would adversely affect the bond of the adhesive.

The adhesive shall be placed uniformly on the cleaned pavement surface in an amount sufficient to result in complete coverage of the area of contact of the markers, with no voids present and with a slight excess after the markers have been placed. The markers shall be placed in position and pressure applied until firm contact is made with the pavement. The markers shall be protected against impact until the adhesive has set to the degree acceptable to the Engineer.

Excess adhesive on the pavement and on the exposed surfaces of the markers shall be immediately removed. Thinners or solvents which may be detrimental to either the markers or the bond provided by the adhesive shall not be used in removing excess adhesive.

Markers shall not be installed when the temperature of the pavement surface or the atmosphere is less than 40º F, when the relative humidity is 80 percent or higher or when the pavement surface is not dry.

All markers shall be installed to the line approved by the Engineer and in such manner that the reflective face of the markers is perpendicular to a line parallel to the roadway centerline. Raised Pavement Markers installed next to a solid stripe shall be placed to the side of the stripe with a four inch clear space between the edge of stripe and edge of the marker. Raised Pavement Markers installed in broken or dashed striping shall be centered on the striping and centered in the middle of the striping gap. No pavement markers shall be installed over longitudinal or transverse joints of the pavement surface.

463.4 MEASUREMENT:

Pavement markers will be measured as a unit for each marker furnished and placed.

463.5 PAYMENT:

The accepted quantities of pavement markers, measured as provided above, will be paid for at the contract unit price for the type designated, complete in place, including adhesive and surface preparation.

Part 400 add the following new Section:

SECTION 464

ROADSIDE SIGN SUPPORTS

464.1 DESCRIPTION:

The work under this section shall consist of furnishing and installing square perforated tube sign post, U-channel sign post, and foundations.

Sign post and foundations shall conform to the requirements of MCDOT Standard Details.

464.2 MATERIALS

464.2.1 General: Certificates of Analysis shall be submitted for all square perforated tube sign posts and U-channel sign posts.

Excessive damage to the finish of the posts during shipping, handling, or installation will result in rejection of the damaged posts.

464.2.2 Perforated Sign Posts: Single and telescoping perforated posts shall be square tube fabricated from 0.105 inch cold-rolled sheet carbon steel conforming to the requirements of ASTM A366/A366M. Posts shall be welded directly in the corner by high frequency resistance welding or equal. The outside edges of the posts shall be externally scarfed to agree with standard corner radii of 5/32 inch ± 1/64 inch. Bolts, nuts and washers shall conform to the requirements of ASTM A307, Grade A.

Perforated posts shall be galvanized after fabrication in accordance with the requirements of ASTM A525M, Coating Designation 275. Bolts, nuts and washers shall be zinc coated in accordance with the requirements of ASTM A153.

The diameter of holes on perforated sign post shall be 7/16 inch ±1/64 inch on 1.0 inch centers, on four opposite sides for the entire length of the post. Holes shall be on the centerline of each side on true alignment and opposite to each other. All material cuts

must be centered between hole patterns and at a 90-degree angle to the length of material.

The finished sign posts shall be straight and have a smooth uniform finish. All consecutive sizes of posts shall be freely telescoping for not less than 120 inches of their length without the necessity of matching any particular face to any other face.

464.2.3 U-Channel Sign Posts: U-channel sign post shall be used for temporary signing only.

U-channel posts shall be fabricated from rerolled rail steel conforming to the requirements of ASTM A499 or hot-rolled carbon steel bars.

Prior to rerolling the rail steel, the rail nominal weight shall be 91 pounds per yard and shall meet the requirements of ASTM A1 pertaining to quality assurance.

Yield Point of the steel shall be 80,000 psi minimum.

The cast heat analysis of the steel shall conform to the following requirements:

Element	Composition (Percent)
Carbon	0.67 - 0.82
Manganese	0.70 - 1.10
Phosphorus, max.	0.04
Sulphur, max.	0.05
Silicon	0.10 - 0.25

Posts shall be a uniform, modified, flanged channel section as shown in MCDOT Standard Detail 2059. Weight of the posts shall be 2.00 lbs. per lineal foot, plus or minus five percent. The post shall be punched with continuous 3/8-inch diameter holes on 1.0-inch centers. The first hole shall be 1.0 inches from top and bottom of post.

The post shall consist of two parts, a sign post and a base post. The sign post lengths shall be supplied in 6-inch increments up to 12.0 feet as required for the installation location. The base posts shall be 3.5 feet in length, pointed at one end, and have at least eighteen holes in the base post, starting 1.0 inches from the top and continuing at 1.0-inch increments.

Posts shall be machine straightened to have a smooth uniform finish, free from defects. All holes and edges shall be free from burrs. Permissible tolerance for straightness shall be within 1/16 inch in 36 inches.

Posts shall be galvanized after fabrication in accordance with the requirements of ASTM A123. Bolts, nuts, washers and spacers shall be zinc plated in accordance with the requirements of ASTM B633.

U-channel base posts shall be driven into the ground to a minimum depth of 36 inches.

464.2.4 Concrete: Concrete for perforated sign post foundations shall be Class B in accordance with Section 725.

464.3 CONSTRUCTION:

Foundations for perforated sign posts and U-channel posts shall be constructed to the details and dimensions shown on the plans.

Sign posts shall be erected plumb.

464.4 MEASUREMENT:

Perforated sign posts and U-channel sign posts shall be measured by the foot, to the nearest inch for each post furnished and installed. The total length of all posts of the same type will be rounded to the nearest foot. Telescoping post members will be considered as one post after installation and will not be measured separately. The length of perforated sign post shall be measured from the top of the post to the bottom of the eighteen inches (18”) located in the post foundation. The length of U-channel sign posts shall not include the U-channel base post.

Perforated sign post foundations shall be measured by the unit each.

U-channel base post installations shall be measured by the unit each.

464.5 PAYMENT:

The accepted quantities of perforated sign posts, U-channel sign posts, perforated sign post foundations, and U-channel base post installations measured as provided above, will be paid for at the contract unit prices.

The contract unit prices paid shall include full compensation for furnishing all labor, excavation, materials, tools, equipment and incidentals, and for doing all the work involved in constructing foundations, furnishing and erecting the sign posts including galvanizing and furnishing all metal plates and hardware, as shown on the plans and as specified herein, complete in place.

Part 400 add the following new Section:

SECTION 465

SIGN PANELS

465.1 DESCRIPTION:

The work under this section shall consist of furnishing and installing sign panels in accordance with the details shown on the plans and the requirements set forth herein.

465.2 MATERIALS:

465.2.1 General: Certificates of Compliance shall be submitted for all materials, including reflective sheeting, required for fabricating sign panels.

Shipment, storage, and handling of sign panels shall conform to the recommendations of the manufacturers of the sign panel components. Fabricated signs and overlay sheets shall be shipped on edge. Damage to the sign panel or legend resulting from banding, crating or stacking shall be cause for rejection of the signs.

465.2.2 Flat Sheet Aluminum Sign Panels with Direct Applied or Silk Screened Characters: Panels shall be fabricated from 5052-H38 Aluminum Alloy conforming to the requirements of ASTM B 209M.

Panel facing shall be prepared and covered with retroreflective sheeting in accordance with the recommendations of the sheeting manufacturer. Color and type of sheeting shall be as specified or shown on the plans.

All surfaces not covered shall be etched to reduce glare from reflected sunlight.

Splicing of retroreflective sheeting shall not be allowed on sign panels having a minimum dimension up to and including 4 feet.

Messages on these sign panels shall be reflectorized white or, if called for in the plans, opaque black and produced by silk screening or direct applied characters or lettering.

465.2.3 Reflective Sheeting: Panels to be installed on Roadside Sign Supports shall be fabricated from flat sheet aluminum and shall be reflectorized as specified herein.

All surfaces of panels to be covered with retroreflective sheeting shall be prepared in accordance with the recommendations of the sheeting manufacturer.

High Intensity Prismatic grade retroreflective sheeting shall comply with ASTM D4956 Type IV sheeting.

Diamond grade retroreflective sheeting shall comply with ASTM D4956 Type IX or Type XI sheeting.

(A) WARNING SIGNS:

Warning signs shall be reflectorized with yellow retroreflective High Intensity Prismatic grade sheeting or as specified by the Traffic Engineer. The following will be the exceptions to this rule:

1. Stop Ahead symbol signs (W3-1), Yield Ahead symbol signs (W3-2), Signal Ahead symbol signs (W3-3), Road Name Cross Traffic Does Not Stop (W4-4c), Cross Traffic Does Not Stop (W4-4P), No Passing Zone pennant signs (W14-3), and Advanced Railroad Crossings signs (W10-1) shall be reflectorized with yellow Diamond grade retroreflective sheeting.
2. School Advanced Warning signs and supplemental plaques and School Crosswalk Warning Assembly signs shall be reflectorized with fluorescent yellow-green Diamond grade retroreflective sheeting.

(B) REGULATORY SIGNS:

Regulatory signs shall be reflectorized with silver-white retroreflective High Intensity Prismatic grade sheeting or as specified by the Traffic Engineer.

Reflectorized red signs shall be reflectorized with silver-white retroreflective High Intensity Prismatic grade sheeting. The red color shall be produced by silk screening.

Regulatory signs with reflectorized red circles and slashes shall be reflectorized with silver-white retroreflective High Intensity Prismatic grade sheeting as background. The red color shall be produced by silk screening.

All Stop Signs (R1-1), Yield Signs (R1-2), All-Way plaques (R1-3P), and Road Closed signs (R11-2) shall be reflectorized with red/white/yellow Diamond grade retroreflective sheeting.

(C) ROUTE MARKERS:

Interstate route markers shall be cut to shape. The colors and legend shall conform to the plans and shall be reflectorized with silver-white retroreflective High Intensity Prismatic grade sheeting. The Interstate route colors shall be silk screened and the hue of the colors shall be within the limits established for the Interstate Route Marker sign color standards. The numerals may be silk screened or direct applied characters.
United States, State Route, and Cardinal Direction markers shall be reflectorized with silver-white retroreflective High Intensity Prismatic grade sheeting unless otherwise shown on the project plans.

(D) STREET NAME SIGNS:

All Street Name Signs shall be manufactured with retroreflective Diamond grade sheeting attached to the standard signage aluminum plates. Street Name Sign imaging shall consist of an acrylic based electronic cuttable film (3M 1170 Series or equivalent) or silk screened with standard highway colors (Diamond grade).

Street Name Signs shall be reflectorized with green or blue retroreflective Diamond grade sheeting as background. The characters shall be direct applied lettering reflectorized with silver-white retroreflective Diamond grade sheeting or as requested by the Traffic Engineer. Street Name Signs fabrication and installation shall conform to the requirements of MCDOT Standard Detail 2054.

(E) METRO STREET NAME SIGNS:

Metro Street Name Sign panels shall be reflectorized with green retroreflective Diamond grade sheeting as background. The characters shall be direct applied lettering reflectorized with silver-white retroreflective Diamond grade sheeting or as requested by the Traffic Engineer. Metro Street Name Sign fabrication and installation shall conform to the requirements of MCDOT Standard Detail 4780. Internally illuminated Metro Street Name Signs shall comply with project special provision sections 470 and 477.

465.2.4 Silk Screened and Direct Applied Characters: Silk screened letters, numerals, arrows, symbols, and borders, shall be applied on the retroreflective sheeting background of the sign by direct or reverse screen process. Messages and borders of a color darker than the background shall be applied to the reflective sheeting by direct process. Messages and borders of a color lighter than the sign background shall be produced by the reverse screen process.

Opaque or transparent colors, inks, and paints used in the screen process shall be of the type and quality recommended by the manufacturer of the retroreflective sheeting.

The screening shall be performed in a manner that results in a uniform color and tone, with sharply defined edges of legends and borders and without blemishes on the sign background that will affect intended use.

Signs after screening shall be air dried or baked in accordance with the manufacturer's recommendations to provide a smooth hard finish. Any signs on which blisters appear during the drying process will be rejected.

Direct Applied letters, numerals, symbols, borders, and other features of the sign message shall be cut from black opaque or retroreflective sheeting of the color specified and applied to the retroreflective sheeting of the sign background in accordance with the instructions of the manufacturer of the retroreflective sheeting and shall be applied by heat activation of the adhesive.

Retroreflective sheeting shall meet or exceed the minimum Specific Intensity Per Unit Area (SIA) requirements of AASHTO M 268.

465.3 CONSTRUCTION:

465.3.1 Fabrication: Fabrication of the sign panels shall be in accordance with the details shown on the project plans and the requirements of these specifications. Panels shall be cut to size and shape and shall be free of buckles, warps, dents, cockles, burrs and defects resulting from fabrication. Sign panel colors, lettering, and symbols shall be in accordance with requirements established by the Manual of Uniform Traffic Control Devices (MUTCD).

Fabricated signs and overlay sheets shall be stored indoors and kept dry during storage. If packaged signs become wet, all packaging material shall be removed immediately and the signs allowed to dry. The signs may be repackaged using new dry materials. If outdoor storage is necessary, all packaging materials shall be removed. Signs shall be stored on edge, above ground, in an area where dirt and water will not contact the sign face. Materials used to support stored signs shall not contact sign faces.

465.3.2 Installation of Sign Panels: The sign panels shall be installed on roadside sign supports in accordance with the details shown on the plans.

Minor scratches and abrasions resulting from fabrication, shipping, and installation of panels may be patched; however, patching shall be limited to one patch per 54 square feet of sign area with the total patched area being less than five percent of the sign area. Panels requiring more patching than the specified limit will be rejected. Patches shall be edge sealed by a method approved by the retroreflective sheeting manufacturer.

The face of bolts on the panel face shall be anodized or painted to match the background or legend color in which they are placed. The zinc coated washers on the panel face shall be the color of, or shall be painted to match, the background or legend color in which they are placed. The sign manufacturer's name and date of installation shall be placed on the back of each sign in black, one-inch block letters. Use of felt markers for this purpose will not be permitted. Bolts shall be tightened from the back by holding the bolt head stationary on the face of the panel. Twisting of the bolt head on the panel face shall not be allowed.

465.3.3 Permanent Road Closures using Type III Barricades: Permanent Type III barricades shall be installed in accordance with MCDOT Standard Details 2057 Series as deemed appropriate to the field conditions.

465.3.4 Inspection: An inspection of the completely installed sign panels will be made by the Traffic Engineer during the daytime and at night for proper appearance, visibility, color, specular gloss and proper installation.

Each sign panel face shall be cleaned thoroughly just prior to the inspection as recommended by the manufacturer. The cleaning solvent and cleaning material shall in no way scratch, deface or have any adverse effect on the sign panel components.

The Contractor at no additional cost to the County shall correct all apparent defects disclosed by the inspection. If color variations or blemishes between aluminum extruded sign panel increments are visible from a distance of 50 feet either during the day or at night, the panels shall be removed and replaced at the Contractor's expense.

465.4 MEASUREMENT:

Sign panels will be measured by the square foot for each type or types of sign panels furnished and installed. The area of each sign panel, except for warning, regulatory and marker sign panels will be measured per plan dimensions.

For warning, regulatory and marker sign panels, the area of each sign panel will be measured to the nearest 0.1 square foot. The areas of each rectangular, square or triangular sign panel will be determined from the dimensions shown on the project plans. The area of irregular shaped signs, such as stop signs and route markers, will be determined by multiplying the maximum height in feet by the maximum width in feet, using the dimensions shown on the project plans.

The total area of all sign panels of the same type will be rounded to the nearest square foot.

Metro Street Name Sign Installation shall be measured by the unit each for every installed and approved Metro Street Name Sign.

465.5 PAYMENT:

The accepted quantities of each type of sign panel, measured as provided above, will be paid for at the contract unit price.

Payment will be made for the total rounded area of each type of sign panel.

The contract unit price shall be full compensation for furnishing all labor, materials, tools, equipment and incidentals, and for performing all the work involved in furnishing and installing the sign panels, except for Metro Street Name Sign panels, complete in place, including furnishing and applying all retroreflective sheeting, all fastening hardware, all necessary sign support accessories, stringers and post ties, all as shown on the plans and as specified.

The contract unit price for Metro Street Name Sign Installation shall be full compensation for furnishing all labor, materials, tools, equipment, fastening hardware, all necessary sign support accessories, stringers, post ties and incidentals, and for performing all the work

involved in installing the Metro Street Name Sign panels, complete in place, as shown on the plans and as specified.

Part 400 add the following new Section:

SECTION 470

GENERAL REQUIREMENTS FOR TRAFFIC SIGNAL AND INTERSECTION LIGHTING SYSTEMS

470.1 DESCRIPTION:

It is the purpose of this section to provide general information necessary for completion of the installation of traffic signals and intersection lighting in accordance with the details shown on the Traffic Signal Plan and the MCDOT Details.

All electrical systems and appurtenances shall be complete, functional and in operating condition at the time of acceptance.

470.2 DEFINITIONS:

The words defined in the following section shall for the purpose of these specifications have the meanings ascribed to them pertaining to signals and lighting.

470.2.1 Actuation: The operation of any type of controller initiated by a detector.

470.2.2 Back Plate: A thin metal strip extending outward parallel to the signal face on all sides of a signal housing to provide suitable background for the signal indications.

470.2.3 Controller: That part of the controller assembly, which performs the basic timing and logic functions for the operation of the traffic signal.

470.2.4 Controller Assembly: The cabinet and complete assembly for controlling the operation of a traffic signal, consisting of a controller unit, and all auxiliary and external equipment housed in a weatherproof cabinet.

470.2.5 Coordinated Traffic Signal System: A group of signals timed together to provide a specific relationship among signal phases.

470.2.6 Cycle: A complete sequence of signal indications.

470.2.7 Detector: A device for indicating the passage or presence of vehicles or pedestrians.

(A) Inductive Loop Detector: A detector capable of sensing the passage or presence of a vehicle by a change in the inductance characteristics of the wire loop.

(B) Magnetometer Vehicle Detector: A detector capable of being actuated by the magnetic disturbance cause by the passage or presence of a vehicle.

(C) Pedestrian Detector: A detector for pedestrians, usually of the push button type.

(D) Video Detector: Video Camera capable of detecting the presence or passage of vehicles or pedestrians.

470.2.8 Flasher: A device used to open and close signal circuits at a repetitive rate.

470.2.9 Flashing Feature: This feature, when operated, discontinues normal signal operation and causes a predetermined combination of flashing signal lights.

470.2.10 Interval: The part or parts of the signal cycle during which signal indications do not change.

470.2.11 Luminaire: The assembly, which houses the light source and controls the light emitted from the light source. Luminaires consist of a housing, lamp socket, reflector and glass globe or refractor when specified.

470.2.12 Manual Operation: The operation of a signal controller unit by means of a hand-operated switch.

470.2.13 Mounting Assembly: The framework and hardware required to mount the signal face(s) and pedestrian signal(s) to the pole.

470.2.14 Pedestrian Signal: A traffic control signal for the exclusive purpose of directing pedestrian traffic at signalized locations.

470.2.15 Pre-timed Controller Assembly: A controller assembly for operating traffic signals in accordance with a predetermined fixed-time cycle.

470.2.16 Red Clearance Interval: A clearance interval, which follows the yellow, change interval during which both the terminating phase and the next right-of-way phase display red.

470.2.17 Signal Face: An assembly controlling traffic in a single direction and consisting of one or more signal sections. Circular and arrow indications may be included in a signal assembly. The signal face assembly shall include back plate and visors.

470.2.18 Signal Indication: The illumination of a signal section or other device, or of a combination of sections or other devices at the same time.

470.2.19 Signal Section: A complete unit for providing a signal indication, consisting of a housing, lens, reflector, lamp receptacle and lamp, or LED unit.

470.2.20 Traffic Phase: A part of the time cycle allotted to any traffic movement or combination of movements receiving the right-of-way during one or more intervals.

470.2.21 Traffic-Actuated Controller Assembly: A controller assembly for operating traffic signals in accordance with the varying demands of traffic as registered with the controller unit by detectors.

470.2.22 Vehicle: Any motor vehicle normally licensed for highway use.

470.2.23 Yellow Change Interval: The first interval following the green right-of-way interval in which the signal indication for the phase is yellow.

470.3 REGULATIONS AND CODES: All electrical equipment shall conform to the current standards of the National Electrical Manufacturers Association (NEMA), National Electric Safety Code (NESC), Underwriters' Laboratory Inc. (UL), when applicable. All material and workmanship shall conform to the requirements of the National Electric Code (NEC), Illumination Engineers Society (IES), Standards of the American Society for Testing and Materials (ASTM), American Association of State Highway and Transportation Officials (AASHTO), requirements of the Traffic Signal Plan, these specifications, the special provisions, and to any other codes, standards, or ordinances which may apply. Whenever references are made to any of the standards mentioned, the reference shall be interpreted to mean the code, ordinance, or standard that is in effect at the time of the bid advertisement.

470.4 SOURCE OF SUPPLY:

The Contractor shall furnish all traffic signal material and equipment required to complete the work except as noted otherwise.

470.4.1 Quality Requirements: Only materials and equipment conforming to the requirements of these specifications shall be incorporated into the work. Material and equipment shall be new except as may be provided in the special provisions.

Maricopa County Department of Transportation reserves the right to reject proposed traffic signal material or equipment if, in the judgment of the Engineer any or all the following may apply:

1) The equipment does not meet the requirements of the specifications.

2) The material or equipment is not in the best interest of Maricopa County Department of Transportation and the public.

3) The material or equipment past field performance has been unsatisfactory.

4) The material or equipment is not compatible with the material or equipment presently in use, which may cause the need to purchase additional spare parts, provide additional training, and/or long term maintenance problems.

In addition, Maricopa County Department of Transportation reserves the right to pre-approve traffic signal material and equipment by brand name model or part number which in the judgment of the Engineer meets the intended purpose of these specifications. Pre-approved items are posted on MCDOT's website:
or http://www.maricopa.gov/190/Technical
Deviations from the pre-approved materials list, if any, will be listed in the project special provisions or construction plans.

470.4.2 Approval Of Material And Equipment: All traffic signal materials and equipment shall be approved by the Engineer prior to incorporation in the work. Any work in which materials or equipment not previously approved are used shall be performed at the Contractor's risk and may be considered as unauthorized and unacceptable and not subject to the payment provisions of the contract. Such materials or equipment may be subject to removal at the discretion of the Engineer.

The Contractor shall obtain the Engineer's approval before ordering or installing any material or equipment. The Contractor shall submit four (4) copies of each proposed material and/or equipment list, including shop drawings. Submittal shall be to the County at the pre-construction conference. To be acceptable, the list shall be complete and comprehensive containing all items to be supplied on the project by the Contractor, including pre-approved items. MCDOT reserves the right to reject any incomplete or unclear material submittal. All items on the list shall be identified by manufacturer's part number, model, specification or other pertinent catalogue information. The materials from any catalog cuts shall be clearly indicated by the contractor. One (1) copy will be returned to the Contractor for further action.

All equipment or material specified or shown on signal plans, or other drawings, by brand name, part number, or model number is intended to be descriptive of the type and quality of material or equipment desired. Another equal brand name, part number, or model number may be substituted so long as it is in accordance with these specifications and is equal in form, fit, function, performance, reliability, and is approved by the Engineer.

The contractor shall provide complete wiring diagrams for controller assemblies and auxiliary controller cabinets at the time of delivery for testing. A mylar original and four sets of prints shall be provided with each controller assembly. The wiring diagram shall illustrate all circuits and components in detail. All components shall be identified by name or number so as to be clearly noted in the drawings.

It is the Contractor's responsibility to ensure adequate lead time in ordering signal equipment to prevent project delay. The Contractor shall notify the Engineer in the event signal equipment is not received in a timely manner.

470.4.3 Warranties and Guaranties: In addition to the requirement of Section 108.8 manufacturers warranties and guaranties furnished for material and equipment used in the work shall be delivered to the Engineer prior to acceptance of the project.

470.5 MARICOPA COUNTY FURNISHED MATERIAL AND EQUIPMENT:

Traffic signal material and equipment furnished by Maricopa County Department of Transportation or tested by Maricopa County Department of Transportation will be made available at the following address:

Maricopa County Department of Transportation Warehouse
Procurement Distribution Center
2222 South 27th Avenue
Phoenix, Arizona 85009-6357

The Contractor shall contact the MCDOT Traffic Signals Branch Manager (602) 506-8660 five working days prior to desired pick-up date to confirm the item list, availability, date and time. Warehouse hours for pick-up and delivery are 6:00 am – 2:00 pm Monday through Thursday. A map of the warehouse loading area will be made available upon request.

The cost of handling and placing all material and equipment, including pick-up by the Contractor is included in the contract price of the associated pay item. The Contractor using

the Contractor's equipment shall load the furnished materials (poles, mast arms, etc.) onto the Contractor's vehicle for transportation to the project site. MCDOT personnel shall not load the materials. The Contractor shall be responsible for any damage that occurs during the loading process.

The Contractor will be held responsible for all material and equipment received. The Traffic Signal Supervisor or designee will issue a receipt for the materials provided. All materials will be issued in serviceable condition; the Contractor will note any exceptions on the receipt. The receipt will be placed in the project file and a copy given to the Contractor. The cost to make good any shortages or deficiencies, from any cause whatsoever and for any damage which may occur after receipt will be deducted from any monies due or becoming due to the Contractor.

470.6 REMOVAL AND SALVAGE OF EXISTING FACILITIES:

The operation of existing or temporary traffic signals shall not be modified or disrupted without the consent of the MCDOT Traffic Signals Branch Manager. Existing signals to be replaced shall not be disconnected or dismantled until the new signal is operational and ready for turn on. The Contractor shall coordinate with the MCDOT Traffic Signals Branch Manager regarding allowable time and duration of any shutdown of existing traffic signals.

All removals shall be done in accordance with Section 350, and as shown on the Traffic Signal Plan. Any item noted on the Traffic Signal Plan to be salvaged shall be delivered to the County warehouse or as directed by the Engineer. Delivery to the County warehouse shall include unloading the salvaged materials at a designated warehouse location by the Contractor using the Contractor's own equipment. Two working days (forty-eight hours minimum) in advance of the intended date of delivery, the Contractor shall coordinate the proposed date, time and items to be delivered with the MCDOT Traffic Signals Branch Manager (602) 506-8660. Warehouse hours for receiving deliveries are 6:00 am – 2:00 pm Monday through Thursday. The address for the County warehouse is:

Maricopa County Department of Transportation Warehouse
Procurement Distribution Center
2222 South 27th Avenue
Phoenix, Arizona 85009-6357

470.7 INSTALLATION OF TRAFFIC SIGNALS AND RELATED ITEMS

470.7.1 General: The Contractor shall furnish labor and supervision with experience in the construction of the traffic signals and all materials, equipment, tools, transportation and supplies required to complete the work in an acceptable manner; within the time specified, and in full compliance to these specifications, terms of the contract, the Traffic Signal Plan and special provisions.

The contractor shall have on the work site at all times a competent supervisor capable of reading and thoroughly understanding the plans and specifications and thoroughly experienced in the construction of traffic signals. Unless waived by the special provisions, the Contractor's supervisor shall possess an International Municipal Signal Association (IMSA) Level II Traffic Signal Electrician Certification.

470.7.2 Traffic Signal Plan: The Traffic Signal Plan graphically describes the location of signal component parts, the equipment and materials to be used, and the standards for construction. The plans shall be supplemented by MCDOT Details or other drawing(s) deemed necessary for the acceptable completion of the work.

Where dimensions on the plans are given or can be computed from other given dimensions, they shall govern over scaled dimension.

After completion of the project the Contractor shall provide the Engineer with a set of as-built drawings on clean prints of the original drawings. The as-built drawing shall indicate in a neat and accurate manner all changes and revisions in the original design. As-built drawings shall be submitted before final payment for completed work will be made.

Part 400 add the following new Section:

SECTION 471

ELECTRICAL UNDERGROUND INSTALLATION

471.1 DESCRIPTION:

The work under this section shall consist of furnishing and installing electrical conduit, and pull boxes for traffic signals and intersection lighting including jacking, drilling, excavating placing and compacting backfill material in accordance with the locations shown on the Traffic Signal Plan, requirements of these specifications, and MAG specifications.

471.2 MATERIALS:

471.2.1 Electrical Conduit and Fittings: All conduit and conduit fittings shall be listed by UL, and conform to NEC standards. Except as specified below, all conduit to be installed underground or in concrete structures shall be rigid polyvinyl chloride (PVC) conforming to the requirements of UL 651 for Rigid Nonmetallic Conduit. PVC conduit and conduit fittings shall conform to the requirements of NEMA TC 2 Electrical Polyvinyl Chloride (PVC) Conduit and NEMA TC 3 Polyvinyl Chloride (PVC) Fittings for Use with Rigid PVC Conduit and Tubing. Electrical PVC Conduit shall be Schedule 40 (EPC-40), heavy wall, manufactured from high impact material and shall be rated for use at 90º C. High Density Polyethylene (HDPE) conduit will be considered for approval for directional boring applications.

All exposed conduit and conduit fittings to be installed above ground shall be rigid metallic type manufactured of galvanized steel conforming to requirements of UL 6 for Rigid Metallic Conduit and to NEC standards.

471.2.2 Conduit Warning Tape: Conduit warning tape shall be a four (4) mil inert plastic film specially formulated for prolonged use underground and shall be a minimum of 3 inches wide. All tape shall be highly resistant to alkalis, acids, and other destructive agents found in the soil.

Tape shall have a continuous printed message warning of the location of underground conduits. The message shall be in permanent ink formulated for prolonged underground

use and shall bear the words, 'CAUTION--ELECTRIC LINE BURIED BELOW' in black letters on a red background.

471.2.3 Pull Boxes: Pull boxes, pull box covers and pull box extensions shall be constructed of polymer concrete with reinforced heavy-weave fiberglass in accordance with MCDOT Details 4711 and 4712. Pull boxes and covers shall be concrete gray color and rated for no less than 8,000 lbs. over a 10” x 10” area and be designed and tested to temperatures of -55º F. Material compressive strength shall be no less than 1584 ksf. Covers shall have a minimum coefficient of friction of 0.5. Pull boxes shall be stackable for extra depth. Covers shall be secured with two (2) 3/8 inch corrosion resistant metallic hex bolts with corrosion resistant metallic washers. The bolts shall be in accordance with the requirements of MCDOT Detail 4711.

The words “TRAFFIC SIGNAL” shall be cast in the pull box covers in 1-inch high letters.

At the request of the Engineer the Contractor shall furnish pull box plans and specifications.

Chipped or cracked pull boxes, covers and extensions will not be accepted.

471.2.4 Metal Junction Boxes: Metal junction boxes and covers for installation in concrete structures shall be fabricated from a minimum of 59 mils thick type 304 stainless steel. All seams shall be continuously welded and shall conform to the dimensions and details called out for or shown on the project plans. A neoprene gasket with a thickness of 1/8 inch shall fit between the box and the cover. The cover shall be made to fit securely and shall be held in place with a minimum of four stainless steel machine screws. Tabs for ease of installation may be attached to the junction box at the option of the contractor.

471.3 CONSTRUCTION:

471.3.1 Installation Of Electrical Conduit:

(A) General Requirements: Conduit shall be furnished and installed at the locations and of the sizes shown on the Traffic Signal Plan. Unless changes are necessary to avoid underground obstructions all underground conduit shall be installed in a straight line from pull box to pull box and/or from foundation to pull box and shall be of one continuous size. Any change in conduit routing must be approved by the Engineer and documented by the Contractor on as-built traffic signal plans.

All PVC conduit shall be stored and handled in an approved manner to minimize ultraviolet deterioration due to exposure to sunlight.

The PVC conduit shall be cut square and trimmed to remove all rough edges. PVC conduit connections shall be of the solvent weld type. Purple primer conforming to the requirements of ASTM F 656 shall be applied to the joined surfaces prior to use of cement. The joint cement shall be the gray PVC cement conforming to the requirements of ASTM D 2564. Where a connection is made to rigid metallic conduit, the coupling used shall be a PVC female adapter.

Expansion joint fittings shall not be installed in PVC conduit runs between pull boxes unless specified. Expansion joint fittings shall be installed in conduit runs in which both ends of the conduit are fixed in place, such as conduit runs between two foundations. Expansion joint fittings shall be installed in conduit runs which cross a concrete structure

expansion joint. Approved expansion fittings shall allow for a linear thermal expansion of up to 6 inches.

Conduit embedded in concrete structures shall be securely attached to the reinforcing steel at intervals of approximately 12 inches. Expansion fittings shall be installed where conduit crosses expansion joints in the structure. Where bonding is not continuous, expansion fittings shall be provided with a bonding jumper of number 6 AWG flexible wire. Where it is not possible to use expansion fittings, sleeves of sufficient size shall be installed to provide a minimum ½ inch clearance between the conduit and the inside wall of the sleeve. The sleeve shall be discontinuous at the expansion joints.

All existing conduits and conduit embedded in concrete structures shall be cleaned out with a mandrel and blown out with compressed air.

Field PVC conduit bends shall be made without crimping or flattening, using the longest radius practical but not less than specified by the NEC. Collapsed conduit, no matter how small, is not acceptable. The number of bends between pull boxes or between pull box and foundations shall not contain more than equivalent of two quarter bends (180 degrees, total), including the bends at the pull boxes or foundations, unless authorized by the Engineer.

Conduit entering a pull box or foundation shall be fitted with a factory made 90 degree elbow with a minimum sweep radius per the table below:

Conduit Size	Sweep Radius
2 inches	10 inches
3 inches	13 inches

Conduit entering pull boxes shall terminate a minimum of 3” inside the box wall. The conduit shall be between 2” and 4” above the bottom of the pull box and shall be sloped to facilitate the pulling of conductors. Conduit entering through the bottom of a pull box shall be located near the sides and ends and extend no more than 4” above the bottom of the pull box including the length of the conduit bell end in order to leave the major interior portion clear. At all outlets, conduits shall enter from the direction of the run and allow for expansion and contraction.

Conduit for future use shall have a ¼ inch nylon rope and a No. 8 AWG bare copper wire installed that extends 24 inches beyond each end of the PVC conduit run. The pull rope and bond wire shall be coiled and inserted into the conduit so as to be easily recovered from either end. Conduit ends shall be capped with conduit end cap fittings after the pull rope is installed. Conduit end cap shall remain in place until wiring is started. When end caps are removed, PVC ends shall be provided with an approved conduit end bell. End bells shall be installed prior to the installation of the conductors. Approved insulated grounding bushings shall be used on steel conduit ends.

The Contractor shall place warning tape (as specified in Section 471.2.2) in all open trenches in which conduit is placed. All warning tape shall be buried at a depth of 6” to 8” below final grade.

Where conduit is to be installed under existing roadway pavement by jacking or drilling methods, the jacking and/or drilling pits shall be kept 2 feet clear of the edge of the pavement.

Conduit stub-outs under curbs or roadway edges for loop detection lead-in conductors shall conform to the requirements of MCDOT Details 4758 and 4759. Loop detection conduit stub-outs shall not be installed until completion of curb and gutter work. A 3-inch "X" shall be chiseled into the curb directly over conduit located under curbs.

Installation of conduit for underground electrical service shall be in accordance with the Standard Details, as shown on the Traffic Signal Plan and in accordance with the requirements of the utility company providing electrical service. Conduit installed in railroad right-of-way shall be installed in accordance with the requirements of the railroad company.

(B) Conduit Depth Requirements: Conduits installed in protected areas such as behind curbs, under side-walks, etc. that are not subject to any vehicular traffic shall be at a minimum depth of 24 inches below final grade. Conduits installed under roadways, driveways, or any open area where there is the possibility of vehicular traffic, shall be installed at a minimum depth of 36 inches below final grade. When conduit cannot be installed at the minimum depth, it shall be completely encased in 3" of class C concrete in accordance with Section 725.

(C) Trenching, Backfilling and Compaction: Trenches shall not be excavated wider than necessary for the proper placement of conduit and pull boxes. Trenching shall be done in accordance with MAG Section 601. Backfilling, compaction and bedding of conduit runs shall be in accordance with MAG Section 601.4.9.

Open trench excavation across any existing paved areas, shall have two (2) parallel cuts made at a distance not to exceed 16 inches. All removal and replacement of existing paved areas shall be in accordance with Section 336.

Open trench excavation across an existing portland concrete area shall have two (2) parallel cuts made at a distance not to exceed 16 inches. All removal and replacement of existing portland concrete areas shall be done in accordance with Section 336.

After each excavation is complete and materials in place, the Contractor shall notify the Engineer for inspection, and under no circumstances shall any underground material or equipment be covered with fill without proper approval.

471.3.2 Installation of Pull Boxes: Pull boxes of the type specified on the Traffic Signal Plan shall be furnished and installed at the locations shown on the Plan. Pull boxes shall be installed in accordance with MCDOT Detail 4713. All relocation of pull boxes to avoid driveways and/or other structures shall be approved by the Engineer and documented by the Contractor on the as-built traffic signal plans.

Pull boxes shall be set and adjusted so that they are flush at curb or sidewalk grade. When no grade is established pull boxes shall be set as requested by the Engineer.

All pull box covers shall be secured with the required bolts and washers before final acceptance of the project.

All pull boxes shall be left in a clean condition, free of dirt and debris upon completion of the work.

471.4 MEASUREMENT:

Conduit will be measured by the linear foot for each diameter size.

Pull boxes will be measured as a unit for each pull box size.

471.5 PAYMENT:

The accepted quantities of conduit, measured as provided above, will be paid for at the contract unit price per linear foot, which shall be full compensation for the item, COMPLETE IN PLACE, including excavation, concrete encasement required due to insufficient depth, backfill, warning tape, pull rope or bond wire and any incidentals necessary to complete the work. No direct payment will be made for rigid metal conduit bends or rigid non-metallic conduit bends at pull boxes, expansion fittings and coupling fittings, the cost being considered as included in the contract price for the conduit.

The accepted quantities for pull boxes, measured as provided above, will be paid for at the contract unit price, which shall be full compensation for the item, COMPLETE IN PLACE, including excavating, backfilling, and restoration of disturbed landscaping.

Part 400 add the following new Section:

SECTION 472

TRAFFIC SIGNAL FOUNDATIONS

472.1 DESCRIPTION:

The work under this section shall consist of furnishing all materials and constructing all traffic signal foundations and other designated pole foundations including signal poles, cabinet and electrical service pedestal foundations for the traffic signals, and intersection lighting system in accordance with the locations and details designated on the Traffic Signal Plan, MAG Specifications, and the requirements of these specifications.

Pole foundations shall include all conduit, conduit elbows, anchor bolts, re-bar cages, grounding electrode, and forms required for construction of the foundation. The traffic signal pole foundations shall conform to the requirements of MCDOT Details 4720 and 4721.

The controller and combination service pedestal and battery back-up system cabinet foundations shall conform to the requirements of MCDOT Details 4723 and 4724.

472.2 MATERIALS:

472.2.1 Excavation and Backfill: Trenches shall not be excavated wider than necessary for the proper placement of conduit and pull boxes. Trenching, backfilling and compaction shall be done in accordance with Section 601.

All excavations within the roadway shall be backfilled and compacted in accordance with Section 211.

472.2.2 Concrete: Concrete used for all foundations shall be class ‘A’ concrete and shall be in accordance with the requirements of Section 725.

472.2.3 Anchor Bolts: Anchor bolts, nuts, and washers shall meet or exceed the minimum requirements of ASTM F1554 Grade 105, shall be hot dip galvanized in accordance with the requirements of ASTM A153. Anchor bolts shall be in accordance with referenced details, for standard traffic signal foundations see Details 4725 and 4726. Welding shall not be performed on any portion of the body of anchor bolts. Threads shall be Unified National Coarse Series (UNC), Class A2.

Certificates of Analysis shall be submitted for anchor bolts, washers and nuts.

472.2.4 Rebar Cage: All rebar cages shall be in accordance with MCDOT Detail 4721.

472.2.5 Electrical Conduit: All electrical conduit and conduit fittings shall be in accordance with these specifications.

472.2.6 Grounding Electrode: The grounding electrode shall be in accordance with these specifications and MCDOT Details 4720, 4721, 4723 and 4724.

472.3 CONSTRUCTION:

The excavations required for the installation of foundations and other items shall be performed in such a manner as to avoid any unnecessary damage to streets, sidewalks, landscaping and other improvements. Any damage by the contractor's operation shall be replaced or reconstructed where determined by the Engineer at the expense of the contractor. The trenches shall not be excavated wider than necessary for the proper construction of the foundations and other equipment. Excavation shall not be performed until immediately before construction of foundations. The material from the excavation shall be placed in a position that will minimize obstructions to traffic and interference with surface drainage.

All surplus excavated material shall be removed and properly disposed of within 48 hours by the contractor, as directed by the Engineer. After each excavation is completed, the contractor shall notify the Engineer for inspection, and under no circumstances shall any underground materials or equipment be covered with fill without the approval of the Engineer.

Excavation and backfill shall be in accordance with the requirements of Section 105.12. At the end of each working period, all excavations shall be barricaded or covered, or both, to provide safe passage for pedestrian and vehicular traffic.

Excavations in the street or highway shall be performed in such a manner that not more than one traffic lane is restricted at any time, unless otherwise provided in the Special Provisions.

Sidewalk and pavement excavations shall be kept well covered and protected to provide safe passage for pedestrian and vehicular traffic until permanent repairs are made.

The elevation of signal and lighting pole foundations shall be set as follows unless otherwise noted within the construction plans or special provisions. Signal and lighting pole foundations shall be set flush with the existing or new sidewalk when sidewalk is present. Where curb exists without sidewalk, the foundations shall be set flush with a surface defined by a 1.5% upward slope from the top of curb. Where there is no curb or sidewalk pole foundations shall be as shown on the project plans. The dimensions and locations of foundations shall be as specified on the project plans; however, the Engineer

may direct that changes be made in locations due to obstructions or other existing conditions. Any change in locations shall be documented by the contractor on as-built traffic signal plans. The contractor shall verify top of foundation elevations with the Engineer prior to foundation construction.

Concrete shall be placed in holes which have been augured against undisturbed earth. If the material in the bottom of the hole is not firm and stable, it shall be compacted or treated as directed by the Engineer. The walls and the bottoms of the holes shall be thoroughly moistened prior to placing concrete.

If the soil is not stable, a deeper foundation than specified may be required or forms shall be used as determined by the Engineer. The forms shall be of the proper size and dimensions and shall be rigid and securely braced

Foundation forming material shall extend no more than 20 inches below the foundation final grade and shall be removed after placement and curing of concrete.

Anchor bolts shall be oriented such that the bolt pattern sides are both parallel and perpendicular to the roadway centerlines unless otherwise specified on the Traffic Signal Plan. A 25-foot coil of No. 4 AWG bare copper conductor shall be installed below the foundation and covered with fill material such that no part of the coils will be in contact with the concrete foundation. An extension of the No. 4 AWG bare copper wire shall extend into the pole. Anchor bolts, conduit and rebar cage shall be centered within the foundation, set at the specified height and plumb within ±1/2 degree. During placement of concrete, anchor bolts shall be securely held in proper alignment, position, and height with a suitable template.

After excavations are completed and anchor bolts and conduit installed, the Contractor shall notify the Engineer for inspection. Under no Circumstances shall concrete be placed without approval of the Engineer.

The concrete pour shall be continuous and consolidated by means of vibrators. All exposed surfaces of the foundation shall receive a finish that is smooth, level, and free of form marks.

Type 'A' and 'SB' pole foundations, type 'P' cabinet foundation, and type ‘SP’ service pedestal foundation shall set for a minimum of three (3) days prior to installation of poles and/or cabinets. Type 'E', 'F', 'J', ‘Q’, ‘K’ and 'R' pole foundations shall set for seven (7) days prior to installation of poles.

Before the concrete for the cabinet foundation has set, depressions shall be made around the anchor bolts for adjustment of the cabinet leveling nuts in accordance with MCDOT Detail 4723.

472.4 MEASUREMENT:

Foundations for traffic signals and intersection lighting system will be measured as a unit for each type of foundation constructed.

472.5 PAYMENT:

The accepted quantities of foundations for traffic signal and intersection lighting system, measured as provided above, will be paid for at the contract unit price. Payment shall be

full compensation for the work, COMPLETE IN PLACE, including excavations, backfill and incidentals necessary to complete the work.

No measurement or direct payment will be made for anchor bolts or re-bar cages, the cost being included in the unit price paid for foundations.

Part 400 add the following new Section:

SECTION 473

DETECTORS

473.1 DESCRIPTION:

The work under this section shall consist of furnishing and installing vehicular and pedestrian detectors at the locations shown on the Traffic Signal Plan and in accordance with the requirements of these specifications.

473.2 MATERIALS:

473.2.1 Loop Detector Sensor: Loop detector sensors shall be of the size and type specified on the Traffic Signal Plan and shall conform to the requirements of MCDOT Detail 4757. The conductors for inductive loop detection and the loop detector lead in cable shall be as specified by Section 478.2.1.

Roadway loop detector sensor wire shall conform to IMSA specification 51-5 and installed in accordance with the requirements of these specifications and MCDOT Details 4757, 4758, and 4759.

473.2.2 (A) Hot Applied Rubberized Sealant: The saw cut loop sealant shall be a hot applied rubberized asphalt formulated specifically for use as a loop sensor saw cut sealant. The sealant shall be non-tracking during application and relatively stiff but flexible after application at low pavement temperatures. At application temperatures the sealant shall be a thin, free flowing fluid which penetrates the saw cut, encapsulating the loop conductors and self-levels permitting uniform and easy application.

The sealant shall be applied using a pressure feed melter/applicator equipped with a heated hose and handgun control.

When heated in accordance with ASTM D3407 the sealant shall meet the following physical properties:

SPECIFICATIONS

TEST PARAMETER	LIMITS	TEST METHOD
Cone Penetration, TIF 150g, 5 sec; .004 inch	35 max	ASTM D 3407, Sec. 5
Flow, 140F, SM; inch	0.2 max	ASTM D 3407, Sec. 6
Resilience, TIF	30% min	ASTM D 3407, Sec. 8
Softening Point	180°F min	ASTM D 2398
Ductility, TIF 2”/min	12” min	ASTM D 113
Mandrel Bend	Pass	SEE NOTE BELOW
Pour Temperature	379°F	
Safe Heating Temperature	410°F	

NOTE: A sample of sealant is poured in a 0.12 inch thick by 1.0 inch wide and 4.0 inches long configuration on a glycerin coated brass plate using appropriate molds. The specimen is removed from the molds, placed in a freezer maintained at 0°F ±2°F for one (1) hour. To test, remove the specimen from the freezer and immediately bend over a 1-inch diameter mandrel through a 180-degree arc in five (5) seconds at a uniform rate. To pass the test, the sample shall not show any cracks.

473.2.2(B) Optional Cold Applied Emulsion Sealant: As an alternative sealant, the loop sealant shall be a single component asphaltic emulsion sealant designed to fill and seal inductive loop saw cuts. Loop sealant shall be “Tri-American TA-500” or approved equal.

SPECIFICATIONS

TEST PARAMETER	LIMITS	TEST METHOD
Residue by evaporation, weight percent	70 min	ASTM D 2939
Ash content, weight percent	50 min	ASTM D 2939
Firm set time, hours	4 max	ASTM D 2939
Brookfield viscosity, Poise RVT Spindle #3, 10 RPM at 75 ± 2 º F	50 to 125 °F	
Tensile strength, psi,	20 min	ASTM D 2523
Elongation, %	2.0 min	ASTM D 2523
Flexibility	No full depth cracks	ASTM D 2939 SEE NOTE BELOW
Resistance to water	No blistering, re-emulsification or loss of adhesion	ASTM D 2939, Alternative B

NOTE: Flexibility: Except air-dry specimens to constant weight at 75º ± 5º F and 50º ± 10º F relative humidity. Condition the mandrel and specimens for 2 hours at 75º ± 2º F before test.

473.2.3 Pedestrian Detectors: All pedestrian push buttons shall be in accordance with the Americans with Disabilities Act Accessibility Guidelines (latest revision).

The housing of the push-button station shall be of substantial tamper-proof construction made of cast aluminum. The assembly shall be weather-proof and so constructed that it

will be impossible to receive any electrical shock under any weather conditions. The housing shall be shaped to fit the curvature of the pole to which it is attached and shall provide a rigid installation. The housing body shall contain a direct push-type actuator button, microswitch-type or approved equal. The housing cover shall contain the push-button sign as described below.

Pedestrian push-button signs shall be fabricated from 5052-H38 Aluminum Alloy conforming to the requirements of ASTM B209, 6 inches by 12 inches in size. Corners of the sign shall be finished round for safety and neat appearance. Panel facing shall be prepared and covered with High Intensity Prismatic retroreflective sheeting. Instructions on the signs shall be black letters and orange symbols on a white background. The legend shall be as indicated by the plans.

The standard pedestrian detector shall be a push-button switch mounted inside an approved push-button housing. The switch shall be the phenolic-enclosed SPST-type with momentary contacts. The contacts shall be rated at 15 amps and 125 volts AC. The switch shall have screw-type terminals and shall have a rated life of not less than one million operations. The switch shall operate in the normally open position.

Audible pedestrian detectors shall provide 4-wire interface inside an approved housing. Audible detectors shall have ambient gain compensation for the pushbutton locator tone, audible walk tone, and programmable message. They shall have a tactile arrow and vibro-tactile indication during the walk cycle.

473.2.4 Video Detectors: The video image detector system shall include cameras with environmental enclosures, mounting hardware, the image processor, software, cables, surge protection, lightening protection, together with other accessories as required by project plans or special provisions.

The number of cameras for the video image detection system will be based on the plans or as directed by the Engineer.

The video image detector system shall be an approved system identified on the MCDOT Approved Materials List, available on the MCDOT website
or http://www.maricopa.gov/190/Technical

473.2.4.1 Mounting Locations: The contractor shall confirm with the Engineer the exact location for mounting each video detection camera before ordering equipment.

473.2.4.2 Cables: The cables for power and control shall comply with the video detection camera manufacturer's specifications. A single cable of an appropriate length without splices shall connect each video image detector with the control cabinet.

The cables for video detection equipment shall either conform to requirements for Coaxial Cable and Power Cable [(A) and (B)] or for Video over Power Cable (C):

(A) Coaxial Cable:

1. Conductor: 20 AWG Solid BC (Bare Copper), 0.78 mm diameter

2. Insulation: Polyethylene 5.02 mm diameter
3. Outer Shield: Two layers of braided TC (Tinned Copper), 98% coverage
4. Outer Jacket: Polyethylene
5. Operating Temperature Range: -55 to +80 degree C
6. Non-UL Temperature Rating: 80 degree C

(B) Power Cable:

1. Conductors: 16 AWG fully annealed stranded bare copper, Class K stranding per ASTM B 174
2. Insulation: Oil resistant Thermoplastic Elastomer (TPE)
3. Jacket: Water, sunlight, and oil resistant, flame-retardant Thermoplastic Elastomer (TPE).

(C) Video Over Power Cable:

1. Conductors: 18 AWG fully annealed stranded bare copper, Class K stranding per ASTM B 174.
2. Jacket: Polyethylene.

473.3 CONSTRUCTION:

473.3.1 Vehicular Loop Detector Sensors:

(A) General: Vehicular loop detector sensors of the size and type specified on the Traffic Signal Plan shall be installed in accordance with the locations shown on the Traffic Signal Plan and the requirements of these specifications. Any change in loop detector sensor location or deviation in loop detector sensor installation not in accordance with these specifications must be approved by the Engineer and documented by the Contractor on as-built signal plans. The installation of the detectors shall be such that the operation shall not be affected by temperature changes, water, ice, rain, snow, chemicals, or electromagnetic noise.

(B) Loop Detector Sensor Conductor Installation: The loop detector sensor conductors shall be installed prior to the placement of a finishing course or overlay when the project includes the installation of a finishing course or overlay. The loop detector sensor conductors shall be installed in accordance with MCDOT Detail 4757. All saw cuts shall be made with an abrasive type saw. The sawed slot shall extend to the curbside PVC conduit for each loop sensor. Separate lead-in sawed slots extending from the loop to the stub-out conduit shall be cut for each loop sensor. To ensure that all saw cuts are true and straight a loop sensor layout shall first be made on the pavement surface.

All corner points shall be cored drilled at full depth of the loop saw cut or have diagonal and corner saw cuts with overlap such that the sawed slot is at full depth through all turn points.

The sawed loop sensor slot and drill points shall be flushed clean of all debris with a high-pressure stream of water and completely dried by means of an air stream prior to installation of loop sensor conductors.

After the sawed slot is dry and free of debris, wind the specified number of wire turns into the sawed slot in accordance with the details shown on MCDOT Detail 4757. Wind loops

which are in close proximity in opposite directions, (i.e. No. 1 clockwise, No. 2 counter clockwise, etc.). This may be accomplished by reversing loop "start-finish" lead-in conductors at the curb-side pull box.

The lead-in conductors from the loop sensor to curb-side pull box shall be continuous and twisted a minimum of six turns per foot in the lead-in saw cut and under curb stub out conduit.

(C) Sawcut Sealant: The loop sensor conductors shall be permanently anchored in the sawed slot using the hot applied rubberized asphalt or cold applied single component emulsion sealant as specified. The sealant shall completely surround the loop sensor conductors and fill the sawed slot to within 1/8 inch of the pavement surface. Surplus sealant shall be removed from the road surface without the use of solvents. Traffic lane closure shall remain in place until the sealant has set up; Contractor shall cleanup sealant tracking problems at no additional cost to the County. During hot weather, when approved by the Engineer, a sand blotter may be used.

(C.1) Hot Application: The sealant shall be applied with a sealant melter/applicator which melts the sealant and pressure applies the sealant at 379º F via a heated hose and applicator handgun control. The handling of the sealant melter/applicator and the filling of the saw slot shall be in accordance with the directions of the melter/applicator manufacturer.

(C.2) Cold Application: The emulsion sealant shall be thoroughly mixed per the manufacturer's recommendations. The emulsion sealant may be poured directly from container or any other suitable applicator, applied into sawcuts.

(D) Loop Detector Sensor Connection: Each pair of loop sensor conductors entering the curb-side pull box shall be identified as to which loop it represents (i.e. inside lane, outside lane, through lane, or left turn lane). Each conductor pair shall also be marked to signify its winding direction, "S" for start and "F" for finish. Marking identification tags shall be in accordance with Section 478.2.1.
The loop sensor conductors shall be spliced to the detector lead-in cables in the adjacent curb-side pull box. Detector lead-in cable shall run continuous and unspliced from curb-side pull box to the controller cabinet.

LOOP SIZE	LEAD-IN LENGTH	LOOPS PER CHANNEL	LOOP USE
6.0 ft. x 6.0 ft.	500 ft. or less	1	Advance detection
6.0 ft. x 6.0 ft.	500 ft. or greater	1	Advance detection
6.0 ft. x 40.0 ft.	200 ft. or less	1	Call detection
6.0 ft. x 40.0 ft.	200 ft. or greater	1	Call detection
6.0 ft. x 50.0 ft.	As required and greater	1	Left turn detection

Unless otherwise specified or requested, the maximum number and size of loop detector sensors connected to a detection channel shall be as follows:

All detector wire splices will be made by the MCDOT Signal Shop at time of acceptance of the detectors

(E) Loop Detector Sensor Field Test: Before and after sealing the saw cut the Contractor shall perform an insulation resistance to ground test. The insulation resistance to ground shall be at least 50 mega-ohms measure at a voltage between 400 and 500 volts D.C. Any loop detector sensor not meeting the above insulation test or fails to tune when connected to a loop detector amplifier unit shall be replaced by the Contractor at no cost to Maricopa County Department of Transportation.

473.3.2 Pedestrian Detectors: The type of pedestrian push button detector indicated (with sign) shall be installed at locations shown on the plans in compliance with the referenced detail.

473.3.3 Video Detectors Camera Installation: Video detection cameras shall be installed per the manufacturer's installation requirements and as shown in MCDOT Detail 4755.

The Contractor shall install all mounting equipment and adapter plates needed to securely mount each video detector to the luminaire mast arm of the traffic signal pole or other structure as indicated on the project plans.

The video image detection control panel and cable connections shall be installed in the traffic signal cabinet.

Terminals and connectors shall be installed on cabling at the cameras, the control panel, and controller cabinet. The video detector shall be bound to the mounting bracket or pole.

The camera(s) shall be adjusted to view approaching or receding traffic or both as directed by MCDOT.

Surge protection equipment shall be installed on the rack-mounted Control Panel in the traffic signal controller cabinet. The Contractor shall install in the Control Panel the connections for surge protectors for all conductors (power, data, and video) that run between the pole mounted cameras and the cabinet-mounted machine vision processor.

The surge protector shall be grounded to a terminal block mounted to the cabinet rack. The terminal block shall be bonded directly to the cabinet ground using a #14 AWG copper ground wire. The surge protector leads shall be installed in a straight line on the wall of the traffic signal cabinet.

The Contractor shall coordinate the programming of the video image detection areas/zones by factory approved technical staff. All video shall be tested and operational prior to and on the day of signal activation.

473.4 MEASUREMENT:

Vehicular and pedestrian detectors will be measured as a unit for each type of detector furnished and installed.

Video detection system will be measured as a unit for each signalized intersection based on the number of intersection legs equipped with video image detection.

473.5 PAYMENT:

The accepted quantities of detectors measured as provided above, will be paid for at the contract unit price. Payment shall be full compensation for all labor, materials, and equipment required for the installation and testing, COMPLETE IN PLACE.

Part 400 add the following new Section:

SECTION 474

TRAFFIC SIGNAL POLE INSTALLATION

474.1 DESCRIPTION:

The work under this section shall consist of furnishing and installing traffic signal poles, mast arms, and modifying multi-use poles in accordance with the plans, the referenced details, the special provisions, and these specifications.

Poles shall include a shaft, base, mast arms (if required), and other hardware required to support the traffic signal apparatus or other supported items.

474.2 GENERAL STANDARD:

Steel poles for traffic signals and highway lighting shall include pole shafts, mast arms, and pole bases.

Material standards for traffic signal and lighting supports shall be in conformance with the 2011 Interim Revisions to the (2009) 5th edition of the AASHTO Standard Specifications for Structural Supports for Highway Signs, Luminaires and Traffic Signals. All pole supports shall be designed to withstand the minimum wind load of the 3-second gust wind speed of 90 mph for Exposure C category in any direction.

All welding design, fabrication and inspection of welding for structural steel shall be performed in accordance with the requirements of the 2012 Interim Revisions to the (2010) 6th edition of the AASHTO/AWS D1.5M/D1.5 Bridge Welding Code.

The use of electro-slag welding process on structural steel will not be permitted.

474.3 TYPES OF POLES:

Types of poles to be furnished are as follows:

1. Type ‘A’, Standard Detail 4738
2. Type ‘E’, Standard Detail 4740
3. Type ‘F’, Standard Detail 4741-1
4. Type ‘J’, Standard Detail 4742
5. Type ‘Q’, Standard Detail 4743
6. Type ‘K’, Standard Detail 4748
7. Type ‘R’, Standard Detail 4749-1
8. Type ‘PB’ Standard Detail 4750

(A) Pole Shafts: The tapered pole shafts shall be fabricated from sheet steel of weldable grade which shall meet or exceed the minimum strength requirements of ASTM A36 for all poles except for Type K and Type R poles. The Type K and Type R poles shall be constructed from sheet steel that has a minimum yield stress after fabrication of 48 ksi. A taper rate of 0.125” minimum to 0.140” maximum change in diameter per linear foot is required unless otherwise specified. Pole shafts shall be fabricated according to the thickness requirements shown on the Standard Details.

Standard pipe pole shafts for Type A poles shall be fabricated from standard weight structural steel which conforms to the minimum strength requirements of ASTM A53, Grade B and an outside diameter in inches as indicated on the Standard Details. Each section shall be fabricated from not more than two pieces of sheet steel. When two pieces are used, the longitudinal welded seams shall be directly opposite one another. When the sections are butt-welded, seams shall be directly opposite one another. When the sections are butt-welded together, the longitudinal welded seams on adjacent sections shall be placed to form continuous straight seams from base to top of pole. Pole shafts shall be straight, with a permissive variation not to exceed 1-inch measured at the midpoint.

Pole shafts shall be galvanized in accordance with the requirements of ASTM A123. The visual appearance of the galvanized finish shall be uniform. Discoloration of the galvanized finish such as dark areas, dark streaks, dark rings or transportation handling marks, which are considered excessive by the Engineer, shall not be allowed. Pole shafts that have a finish unacceptable to the Engineer shall either be repaired or replaced to the satisfaction of the Engineer at no additional cost to the Department.

Hand holes in the base of the poles shall conform to the details shown on the Standard Details. All welds shall be continuous and any exposed welds, except fillet welds, shall be ground flush with the base metal.

A metal tag shall be permanently attached to the pole above the hand hole stating the manufacturer's name, pole type per the Department’s plan, pole drawing number, shaft length and inches of material thickness.

(B) Standard Bases: Poles shall have standard bases fabricated from structural steel plates per MCDOT Details, and conform to the minimum strength requirements of ASTM A36. Exposed surfaces shall be finished smooth and all exposed edges shall be neatly rounded to a 1/8 inch radius. Standard bases shall be galvanized in accordance with the requirements of ASTM A123.

(C) Foundation Attachment: Foundation anchor bolt washers and nuts shall be fabricated from steel which meets or exceeds the minimum requirements of ASTM F1554 Grade 105 unless noted otherwise and shall be hot dip galvanized in accordance with the requirements of ASTM A153. Welding shall not be performed on any of the anchor bolts.

(D) Mast Arms: The tapered mast arms shall be fabricated from sheet steel conforming to the requirements of ASTM A36. The mast arms for the Type K and Type R poles shall be constructed of sheet metal with a minimum yield stress of 48 ksi after fabrication. Mast arms shall be fabricated according to the thickness requirements shown on the MCDOT Details. A taper rate of 0.125" minimum to 0.140" maximum change in diameter per foot is required unless otherwise specified. All bolts, washers and nuts for mast arms shall be fabricated from steel conforming to the requirements of ASTM A325 and shall be hot dip galvanized in accordance with the requirements of ASTM A153.

Mast arms shall be galvanized in accordance with the requirements of ASTM A123. The visual appearance of the galvanized finish shall be uniform. Discoloration of the galvanized finish such as dark areas, dark streaks, dark rings or transportation handling marks which are considered excessive by the Engineer shall not be allowed. Mast arms that have a finish unacceptable to the Engineer shall either be repaired or replaced to the satisfaction of the Engineer at no additional cost to the County.

Mast arms shall be bent to the dimensions and curvature shown on the MCDOT Details.

A metal tag shall be permanently attached on the side of the mast arm near the base stating the manufacturer's name, pole type per the Department's plan, mast arm or pole drawing number, length and material thickness.

(E) Luminaire Mast Arms: The tapered mast arms for the luminaires shall be fabricated from sheet steel conforming to the requirements of ASTM A36. Mast arms shall be fabricated according to the thickness requirements shown on the MCDOT Details. A taper rate of 0.125" minimum to 0.140" maximum change in diameter per foot is required unless otherwise specified. All bolts, washers and nuts for mast arms shall be fabricated from steel conforming to the requirements of ASTM A325 and shall be hot dip galvanized in accordance with the requirements of ASTM A153.

Luminaire mast arms shall be galvanized in accordance with the requirements of ASTM A123.

Mast arms shall be bent to the dimensions and curvature shown on the MCDOT Details.

A metal tag shall be permanently attached on the side of the mast arm near the base stating the manufacturer's name, pole type as required on the plans, mast arm or pole drawing number, length and thickness in inches.

474.4 WARRANTIES:

Each type 'A', 'E', 'F', 'J', 'Q', 'K', 'R' and 'PB' signal pole shall be warranted by the manufacturer against all defects in material and workmanship for a period of twelve (12) months and in accordance with the requirements of Section 108.8.

474.5 CONSTRUCTION:

474.5.1 Base Plates and Poles:

High strength bolts, nuts, and washers for bases shall be assembled as specified in the Standard Details. Anchor bolts and nuts are to be drawn down tight to produce a snug-tightened joint. Anchor bolts, washers, and nuts required for relocating existing poles shall be furnished by the contractor.

Poles shall be drilled and tapped for mounting hardware as shown on the Standard Details.

Sidewalks, curbs, gutters, pavement, base material, lawns, plants, and any other improvements removed, broken, or damaged by the contractor's operations shall be replaced or reconstructed.

Where existing pole installations are to be modified, materials and equipment shall be used, salvaged, or disposed of as specified in the Special Provisions and as directed by the Engineer.

Existing poles shall be either relocated or used in place as specified in the project plans. The contractor shall inspect the poles and provide the materials and work necessary to recondition the poles so they can be reused. Holes left in the shafts of existing poles, due to removal of items such as signal mounting assemblies, shall be repaired and painted with zinc galvanized paint.

If any poles are damaged by the contractor's operations, such repairs or replacements shall be at no additional cost to the Department.

New poles that are damaged by improper drilling of holes will be rejected.

474.5.2 Signal Poles and Mast Arms: Installation of traffic signal poles shall be scheduled at a time that minimizes disruption of traffic and minimizes exposure of the travelling public to potential harm. Traffic signal pole installation shall occur during nighttime hours unless prevented by local ordinances or regulations or an alternative time is approved by the Engineer.

Poles and mast arms shall be of the type shown on the Traffic Signal Plan and shall be installed in accordance with the MCDOT Details.

Poles shall be drilled and tapped for mounting of hardware. The use of a welding torch is not authorized.

All poles shall be plumbed to the vertical with all mast arms, signal heads, and luminaires installed. When mast arms are bolted to the pole shaft, the mast arm end over the roadway shall adjust to the horizontal.

474.6 MEASUREMENT:

Poles for traffic signals will be measured as a unit for each type pole installed, COMPLETE IN PLACE. The poles including signal and luminaire mast arms, base plates and all materials required shall be furnished by the contractor unless otherwise indicated.

474.7 PAYMENT: The accepted quantities of poles will be paid for at the contract unit price. Payment shall be full compensation for the work, COMPLETE IN PLACE.

Part 400 add the following new Section:

SECTION 475

ELECTRICAL POWER SERVICE AND CONTROLLER CABINET INSTALLATION

475.1 DESCRIPTION:

The work under this section shall consist of furnishing and installing electrical power service equipment in accordance with the location and details on the Construction Plans, MCDOT Details, the requirements of these specifications, and the specifications of the utility company serving the location, and the picking up, installing and wiring of the controller cabinet assembly in accordance with the type and location as designated on the Construction Plans and the requirements of these specifications.

475.2 MATERIALS:

475.2.1 Electrical Service Pedestal System: Each electrical service pedestal system consists of the cabinet, electrical service equipment wiring and wiring devices.

Combination Electrical Service Pedestal and Battery Back-Up Cabinet: The combination underground service meter pedestal and battery back-up cabinet shall be TESCO catalog number 27-000/22-000 or pre-approved equal, consisting of the meter socket, circuit breaker panel, test bypass facilities, pedestal locking device, ground mount enclosure, batteries, full power by-pass, isolation module and necessary fittings all of which shall conform to the requirements of Detail 4731-1, Traffic Signal Plans, and the project Special Provisions.

Service Pedestal Cabinet: The underground service meter pedestal cabinet shall be TESCO catalog number 26-000 or pre-approved equal, consisting of the meter socket, circuit breaker panel, test bypass facilities, pedestal locking device, ground mount enclosure and necessary fittings all of which shall conform to the requirements of Detail 4829-1, Construction Plans, and the project Special Provisions.

Electrical service equipment wiring and wiring devices shall be in conformance with NEMA, the NEC, MCDOT Details and the specifications of the utility company providing electrical service.

(A) Breakers: All circuit breakers shall have an interruption capacity of 10,000 amperes and supplied as indicated in the wiring schematic diagram.

(B) Meter Loop Assembly: The meter loop assembly shall be bonded and grounded in accordance with the requirements of these specifications.

(C) Conductors: Conductor size and color shall be as specified on the Traffic Signal Plan conductor schedule and in accordance with the requirements of these specifications. All electrical apparatuses shall be UL listed.

475.2.2 Controller Cabinet Assembly: The Controller Cabinet Assembly shall include a weatherproof cabinet. Cabinet type and configuration shall be supplied as specified by the Construction Plans, Standard Details, and in accordance with these specifications.

The Contractor shall deliver the signal controller and controller cabinet assembly to Maricopa County Department of Transportation's Traffic Signal Operations section located at 2909 W. Durango Street, Phoenix, Arizona for final configuration testing and programming. The Contractor shall coordinate the proposed delivery date and time with the MCDOT Traffic Signals Branch Manager (602) 506-8660 at least 1 week prior to the Contractor's anticipated installation date.

475.3 CONSTRUCTION:

475.3.1 Electrical Service Pedestal System

Combination Service Pedestal and Battery Back-Up System: The electrical service meter pedestal and battery back-up system shall be assembled and installed on a concrete foundation at the location shown on the Traffic Signal Plan and in accordance with Detail 4724.

Service Pedestal System: The electrical service meter pedestal shall be assembled and installed on a concrete foundation at the location shown on the Traffic Signal Plan and in accordance with Detail 4829-2.

475.3.2 Controller Cabinet Assembly: The Contractor shall notify the Engineer five (5) days in advance of the intended date the Contractor is to pick up the Controller Cabinet Assembly. The wired cabinet shall be in accordance with the requirements of these specifications.

The controller cabinet assembly shall be picked up at the following address:

Maricopa County Department of Transportation
Traffic Signal Operations
2909 W. Durango Street
Phoenix, Arizona 85009-6357

Contractor shall install the controller cabinet assembly. After the installation and leveling of the controller cabinet, an approved non-shrink type grout shall be placed between the cabinet and foundation.

Contractor shall be responsible for connecting all of the field wiring, except the loop detector lead-ins, to the cabinet terminals. The traffic signal controller will be installed by MCDOT. The Engineer will test the connections before accepting the Controller Cabinet Assembly pay item.

475.4 MEASUREMENT:

Controller cabinet assemblies will be measured as a unit for each type installed.

Each type of Electrical Service Pedestal System installed and accepted will be measured as a unit.

475.5 PAYMENT:

The accepted quantities for the installation of the controller cabinet assemblies, measured as above, will be paid for at the contract unit price. Payment shall be full compensation for the work, COMPLETE IN PLACE.

The accepted quantities for each type of electrical service pedestal system will be paid for at the contract unit price. Payment shall be full compensation for the work, COMPLETE IN PLACE.

Part 400 add the following new Section:

SECTION 476

SIGNAL INDICATIONS AND MOUNTINGS

476.1 DESCRIPTION:

The work under this section shall consist of furnishing and installing vehicular and pedestrian traffic signal indications and mounting assemblies in accordance with the types and locations shown on the Traffic Signal Plan, MCDOT Details 4773, 4774, 4775, 4776, 4778-1, 4778-2, 4794, and 4795 and the requirements of these specifications. Signals, except pedestrian type, for newly signalized intersections shall be of the same manufacturer and of the same material.

476.2 MATERIALS:

476.2.1 Vehicular Traffic Signal Heads: Vehicular traffic signal heads shall be assembled of standard 12 inch lens size signal sections with the number of sections or combination of sections specified on the Traffic Signal Plan, MCDOT Detail 4773 and the requirements of the Manual on Uniform Traffic Control Devices.

The optical performance and design of signal heads shall conform to the requirements of the Institute of Transportation Engineers Standards for Vehicular Traffic Control Signal Heads (ITE Publication No. ST-008B), the Traffic Signal Plan and the provisions of these specifications.

(A) Housing: A standard 12 inch signal section shall be a one (1) piece housing with hinged door for housing all optical and electrical components.

Both the one (1) piece signal section housing and door shall be fabricated of corrosive resistant die cast aluminum conforming to Institute of Transportation Engineers Standards. The top and bottom of the housing shall have openings to accommodate standard 1½ inch pipe fitting. Each opening shall have a locking "Shurlock" boss integrally cast into the housing section.

A snap-in, swing-out cast aluminum reflector ring, supported by stainless steel hinge pins shall be provided. The hinge pins shall be supported by mounting lugs integrally cast on the left side of the housing.

The housing door shall be hinged to the signal section housing by stainless steel roll pins and hinge lugs integrally cast in the door and housing. The door shall be latched by means of integrally cast door latch slots, housing hinge bolt lugs and stainless steel hinge bolts and wing nuts. The 12-inch sections require two (2) latching bolts.

A gasket groove on the inside of the door shall accommodate a neoprene gasket to form a positive seal between the door and signal housing when the door is closed and latched. Four (4) quick change type lens clips and four (4) stainless steel screws shall be provided for securing the lens and lens gasket in the door lens opening. Four (4) stainless steel washer head type screws shall be provided to secure the signal visor.

Signal section housings shall be fastened together by two (2) stainless steel, (clover leaf type) clamping washers and three (3) carriage bolts and lock washers. Each complete signal head assembly shall be pre-drilled for mounting of signal backplates.

All signal sections and the outside surfaces of visors shall be painted gloss black. The inside of the visor shall be painted dull black. All painting shall be done by the manufacturer.

(B) Visors: Each signal section shall have a tunnel type visor with a 5 to 7 degree downward tilt. Unless otherwise specified the 12-inch signal sections shall be furnished with 12-inch by 12-inch long visors. All visors shall be retained to the housing section door with stainless steel washer head type screws.

(C) Backplates: Louvered backplates and backplate mounting hardware shall be furnished with each vehicular signal head assembly. The backplate shall be fabricated of anodized sheet aluminum. The 5.0 inch border backplates shall be provided for the 12-inch signal head assemblies. All backplates shall be painted dull black. All painting shall be done by the manufacturer.

(D) Mounting Assemblies: An elevator plumbizer conforming to the requirements of MCDOT Detail 4778-2 shall be installed with all mast arm mounted 12 inch signal heads, as shown on the Traffic Signal Plan. The plumbizer elongated bolt hole shall be positioned to align with the bolt hole drilled 2 3/8 inches from the end of the tenon on the mast arm. The plumbizer shall be held in place with a 3/8 inch bolt with a nut and two (2) washers per MCDOT Detail 4778-2. The plumbizer signal head mounting position shall be in accordance with the requirements of MCDOT Detail 4778-1.

Pole top and side mount mounting assemblies shall consist of 1⅞” outside diameter (1½” nominal size) standard pipe and fittings. All members shall be so fabricated that they shall provide plumb, symmetrically arranged and securely fabricated assemblies.

Terminal Compartments – A terminal compartment shall be assembled in the mounting brackets as shown in the Standard Details and as called for on the plans. The terminal compartment shall be manufactured of bronze.

A rainproof cover shall be provided for all terminal compartments which will provide ready access to the internal terminal block wiring.

The types of mounting assemblies used, and the methods of mounting them, shall be as shown on the Traffic Signal Plan and shall conform to MCDOT Details.

476.2.2 Led Signal Lamps

(A) General: LED traffic signal modules shall be designed to fit traffic signal housings that meet MCDOT specifications. The module shall be weather tight and shall fit securely in the housing and shall have wire leads long enough for easy connection to the traffic signal head wire terminal block. The wire shall have crimped on terminal connectors. The LED signal module shall be a single, self-contained device. The power supply shall be integral to the sealed LED module.

(B) Module Identification: The Contractor shall ensure that the date of installation is filled in on the module label on each LED module.

(C) Physical and Mechanical Requirements: The LED lamp unit shall be a single self-contained device, not requiring on site assembly for installation. The assembly and manufacturing process for LED Traffic Signal Lamp unit assembly shall be such as to withstand mechanical shock, and vibration caused by winds up to 80 mph.

Signal lens shall be convex to minimize sunlight reflectance.

(D) Optical and Light Output Requirements: The LED shall be manufactured using AlInGaP Technology or other LEDs with low susceptibility to temperature degradation (AlGaS LEDs will not be allowed).

The LED signal lamps shall be in three colors: red, yellow, and green. Multiple color modules shall not be used.

Each LED traffic signal lamp shall meet the minimum laboratory light intensity values, color (chromatically), and light output distribution as described in ITE Standards as shown in Section 11.04, Table I and Section 8.04, Figure 1 of the Vehicle Traffic Control Signal Head Standard. Each LED traffic signal lamp shall meet the minimum requirements for light output for the entire range of allowed voltage.

(E) Electrical: Each unit shall incorporate a regulated power supply engineered to electrically protect the LEDs and maintain a safe and reliable operation. The power supply shall provide capacitor filtered DC regulated current to the LEDs per the LEDs manufacturer's specification. MCDOT does not require the unit be dimmable.

The LED traffic signal lamp shall operate on a 60Hz AC line voltage ranging from 80 volts RMS to 135 volts RMS. The Circuitry shall prevent flickering over this voltage range. Nominal rated voltage for all measurements shall be 117 volts RMS.

The LED traffic signal lamp unit shall be operationally compatible with controllers and conflict monitors used by MCDOT.

Two, captive, color coded, 3 feet long, 600 V, 18 AWG minimum jacketed wires, conforming to the NEC, rated for service at 105º C, are to be provided for an electrical connection.

One Schematic diagram shall be provided for each LED lamp unit along with any necessary installation instructions.

LEDs shall be arranged in no less than 6 loaded circuits.

The LED shall operate with a minimum 0.90 power factor.

Total harmonic distortion (current and voltage) induced into an AC power line by a signal module shall not exceed 20 percent.

LED modules shall have female quick-disconnect type terminals.

476.2.3 Pedestrian Signal Head: The pedestrian signal head shall include an aluminum housing with swing down door frame, a plug-in sealed LED message module, and visor. The pedestrian signal shall be energy efficient with a power consumption of less than 12 watts at 120 volts.

Optically, the pedestrian signal head shall display brightly and uniformly, the alternate symbol messages "HAND" in Portland orange, **"COUNTDOWN NUMERALS" IN Portland orange** and "WALKING PERSON" in lunar white under all ambient light conditions. The message symbols shall not be seen (blank-out) when the message symbol is not energized.

The HAND-WALKING PERSON symbol shall be a minimum of 11 inches high and 7 inches wide and the COUNTDOWN NUMERALS shall be 9" high and 7" wide conforming to the requirements of the Manual of Uniform Traffic Control Devices, Institute of Transportation Engineering Standards for Pedestrian Traffic Control Signal Indications, the Signal Plan and the requirements of these specifications.

(A) Housing and Door Frame: The housing and door frame shall be a one piece corrosion resistant aluminum die casting. The maximum overall dimensions of the pedestrian unit signal housing including door and visor shall be 18 inches wide, 16 inches high, and 9 inches deep. The top and bottom of the housing shall have openings to accommodate standard 1½ inch pipe size fittings. The bottom opening shall have a locking "Shurlock" boss integrally cast into the housing. The distance between the mounting surfaces of the upper and lower opening shall be 15.75 inches.

The housing door frame shall be hinged to the housing by stainless steel pins and hinge lugs integrally cast in the housing and door frame. The swing down door shall be latched by two integrally cast housing hinge bolts lugs, two door latch slots and two stainless steel hinge bolts with wing nuts.

The housing shall be dust proof and weatherproof with the plug-in LED module installed and the door closed and latched. The housing and door shall be painted gloss black by the manufacturer.

(B) LED Message Module: The lunar white and Portland orange LED, solid state controls, and transformers for energizing the LED shall be encased in a plug-in module. The HAND and WALKING PERSON symbol message lens shall be ultraviolet stabilized polycarbonate. The HAND and WALKING SYMBOL message shall be full indications only.

The rear of the module shall have three male quick disconnect lugs for connection of the AC+HAND signal and AC+WALKING PERSON signal. The HAND and WALKING PERSON power consumption shall be less than 12 watts. The COUNTDOWN NUMERALS power consumption shall be less than 7 watts.

476.2.4 Warranties: All LED signal lamps and heads shall be warranted for five (5) years against defects in workmanship and materials and the requirements of Section 108.8.

476.3 MEASUREMENT:

Vehicular and pedestrian signal indications completely (including wiring and mounting assemblies) will be measured as a unit for each type of signal installed.

476.4 PAYMENT:

The accepted quantities of vehicular and pedestrian signal indications, measured as provided above, will be paid for at the contract unit price. Payment shall be full compensation for the work, COMPLETE IN PLACE, including visors, louvered backplates, LED's and all hardware necessary to provide a complete, and functional signal installation.

Part 400 add the following new Section:

SECTION 477

INTERSECTION LIGHTING

477.1 DESCRIPTION:

The work under this section shall consist of furnishing and installing luminaires for intersection lighting in accordance with the location shown on the Traffic Signal Plan and the requirements of these specifications.

477.2 MATERIALS:

477.2.1 General: Intersection lighting materials shall conform to the type of luminaire as indicated on the Traffic Signal Plan.

477.2.2 High Pressure Sodium Luminaire: The luminaire shall be 250 watt, high pressure sodium with an internal ballast and shall be capable of operating on primary voltages of 110 and 220 volts, 60 Hz AC. The luminaire shall be of the horizontal cut-off type. The light distribution pattern shall be Type III medium cut-off unless otherwise specified and shall conform to the Illumination Engineering Society Standards (IES).

All high pressure sodium luminaires shall be supplied with lamps. Each luminaire shall be furnished with an instruction sheet which clearly shows installation procedures and instructions for adjusting the lamp socket. This instruction sheet shall include complete information on all socket positions and the IES light distribution produced from each setting.

477.2.2.1 Housing: The luminaire housing shall be fabricated from a corrosive resistant metal material and have a baked on enamel finish. The housing shall be composed of three (3) sections, an upper housing section and two (2) lower housing sections. The upper housing section retains the reflector, lamp socket, and when specified the photo electric control receptacle. One (1) of the lower housing sections is the lens door frame and shall retain the 90-degree cut-off type flat glass lens. The other lower housing section shall be the ballast module door. The ballast module door shall contain the major electrical components.

The ballast module door shall be lowered by loosening a single stainless steel captive screw. After lowering, the ballast module door shall be removed by unplugging a quick-disconnect electrical plug and lifting the module off its hinges. The hinged lens door housing shall be latched to the upper housing by a spring loaded, single-action latch.

The housing shall have a slipfitter for mounting on a 2-inch mast arm tenon and shall be adjustable for leveling ±3 degrees from the horizontal.

477.2.2.2 Optical Assembly and Gaskets: The optical assembly shall incorporate a snap-on high specular, anodized reflector and shall contain a filter which effectively absorbs gaseous contaminates or particulate matter. The flat glass lens of the optical assembly shall be manufactured of high quality, heat resistant glass.

A gasket of an approved neoprene material that will maintain a watertight and dust-tight seal throughout the temperature ranges inherent with high intensity discharge (HID)

lamps, shall be securely fastened to the reflector. The gasket between the lamp socket and the reflector shall be polyester fiber that will maintain a dust-tight seal throughout the above specified temperature ranges.

The lamp socket shall be of rugged, high grade porcelain securely mounted on a support bracket which is adjustable in both the vertical and the horizontal directions. Each adjustment shall be clearly and permanently coded for each light distribution setting. The coding shall directly relate to the instruction sheet furnished with each luminaire.

477.2.2.3 Ballast: The ballast shall be pre-wired to the lamp socket and terminal board. The ballast shall be mounted on the ballast module door and rated to the circuit voltage and size of the lamp specified. The ballast shall be a regulator type capable of starting lamps at -20 degrees Fahrenheit and operating them within the limits specified by the lamp manufacturer. The ballast shall limit lamp wattage variations to a maximum of five (5) percent even when the ballast voltage input varies ten (10) percent from the normal values. At the rated line voltage, the ballast shall have a minimum power factor of 90 percent. The starting amperes shall be less than operating amperes. The ballast shall provide the lamp voltage shown in the lamp table of Section 477.2.2.4.

477.2.2.4 Lamps: The lamps shall be universal burning, clear, high pressure sodium type. Each lamp shall be clearly and permanently marked, giving the wattage and the American Standard Association number or the manufacturer's reference number. Lamps of the wattage specified shall conform to the following:

Wattage	Lamp Voltage	Minimum Initial Lumens	Rated Life
250	100	30,000	24,000 hr.

477.2.3 LED Luminaire: The luminaire shall be a horizontal, Type III, conform to Illumination Engineering Society Standards. Luminaires shall be furnished with an instruction sheet which clearly shows installation procedures.

477.2.3.1 Housing: Shall be fabricated from a corrosive resistant metal and shall have a baked-on grey enamel finish. Mounting shall be an internal 2 bolt slip fitter at the rear of the fixture capable of attachment to a two inch (2”) inside diameter pipe. The housing shall include a removable door with integral hinges for tool-less maintenance access.

477.2.3.2 Optics: The optics shall create consistent light distributions within the optical orientations and comply with the following requirements.

a. Have a color temperature of 4000K at an ambient temperature of 25 degrees Celsius.
b. Have an average illumence of 1.4 foot candles at a mounting height of 30 feet and a range from 6 to 2.0 foot candles in the illuminated zone.
c. Have backlight control to restrict illumination at the rear.
d. Operate at sustained ambient temperatures of up to 100 degrees Fahrenheit at a minimum 70% lumen output.

477.2.3.3 Electrical: The fixture shall:

a. Have electronic ballast capable of operation at a universal voltage (120-277VAC) at 50/60Hz and shall be accessible without removal of the LED array.
b. Wired for use with no photo cell and shall be energized from a remote cabinet mounted PEC.
c. Be designed to withstand a minimum 10Kv of transient line surge.
d. Incorporate natural conduction and natural convection to rapidly transfer heat from the LED source.

477.2.4 Photo Electric Control (PEC): Photo electric control is a component of the traffic controller cabinet assembly. The remote mounted photo electric control (PEC) shall be rated at 120 volt, 60 Hz AC 3000 volt-ampere. The operating temperature range shall be from -65º F to +158º F and 100 percent relative humidity. The PEC shall be a conventional glass-faced hermetically sealed ½" cell. A time delay shall be incorporated into the PEC circuit to prevent cycling at night by transient lights which might be focused on the PEC.

The PEC shall turn-on at 1.0 ±0.2 foot candles and turn-off at 1.8 foot candles. The PEC shall be UL listed for rain-tight applications. A built-in surge protector shall be provided to protect the PEC from lightning induced and line voltage transients.

The PEC shall be mounted on the controller cabinet with a ½" diameter threaded fitting. PEC shall be (Tork 2105) or approved equal.

The PEC and a luminaire test switch shall be wired in accordance with MCDOT Detail 4737.

477.3 CONSTRUCTION:

Luminaires of the size specified shall be furnished and installed at the locations shown on the Signal Plan. Unless otherwise specified the luminaire shall be adjusted to the horizontal. Field adjustment of the lamp socket in high pressure sodium fixtures shall not be made unless specified on the signal plan or approved by the Engineer. The lamp socket in high pressure sodium fixtures shall be adjusted at the factory to achieve the light distribution as specified herein. All wiring shall be in compliance with the NEC, the requirements of MCDOT Detail 4737 and as shown on the plans. The intersection lighting circuit shall not be connected to the same service leg to which the controller cabinet assembly is connected.

477.4 MEASUREMENT:

Luminaires will be measured as a unit for each type of luminaire furnished and installed.

477.5 PAYMENT:

The accepted quantities of luminaires measured as provided above, will be paid for at the contract unit price. Payment shall be full compensation for the work, COMPLETE IN PLACE.

Part 400 add the following new Section:

SECTION 478

ELECTRICAL CONDUCTORS

478.1 DESCRIPTION:

The work under this section shall consist of furnishing and installing electrical conductors for traffic signals and intersection lighting in accordance with the Traffic Signal Plan, requirements of these specifications, and MAG specifications

478.2 MATERIALS

478.2.1 Electrical Conductors: The wire shall be annealed copper and shall be uncoated unless otherwise specified. The wire shall be solid for number 10, 12 and 14 AWG and smaller diameter wire, conforming to the requirements of ASTM B3 for annealed bare copper wire. Conductors for sizes number 8 AWG and larger diameter wire shall be stranded and shall conform to ASTM B8 for Class B stranding, unless otherwise specified, the conductors shall be insulated with THW grade thermoplastic compound and shall meet the requirements of UL 83. Insulation colors shall be permanent and an integral part of the insulation and shall not be applied as a surface treatment of coating. The insulation thickness shall conform to the requirements of the NEC. Conductor insulation shall be a solid color unless otherwise specified. The color shall be continuous over the entire length of the conductor.

Wire and cable shall be UL listed and rated at 600 volts. The UL label shall be present on each reel, coil or container of wire or cable. When requested, the Contractor shall submit to the Engineer the manufacturer’s written certification that the product conforms to the requirements of these specifications.

All single conductors shall have plain, distinctive and permanent markings on the outer surface throughout their entire length showing the manufacturer's name or trademark, insulation type, conductor size, voltage rating and the number of conductors in the cable. Insulation colors shall be permanent and an integral part of the insulation and shall not be applied as a surface treatment coating.

Conductor colors and sizes for use in traffic signal and intersection lighting shall be as specified on the Traffic Signal Plan conductor schedule, and MCDOT Details 4799-1 and 4799-2.

(A) Loop Detector Lead-In Cables: Loop detector lead-in shielded cables shall be two conductor, stranded, twisted pair, tinned copper, polyethylene insulated cable with a polyethylene jacket, rated at 600 volts and 140 degrees Fahrenheit and shall be in conformance with IMSA Specification 50-2.

(B) Wire Tagging: Individual conductors for each vehicular and pedestrian phase group shall be secured together by two layers of plastic electrical tape and tagged with an approved wire I.D. marker (3M Scotchcode Wire Marker Tape or approved equal). Cables for each vehicular and pedestrian phase group shall be wrapped with two layers of plastic electrical tape and tagged with an approved wire I.D. marker (Scotchcode Wire

Marker Tape or approved equal). Wires and cables shall be individually marked in all cabinets and in pull boxes.

When IMSA cable is specified, wire insulation color assignment shall be in accordance with MCDOT Details 4799-1 and 4799-2.

(C) IMSA Cables: IMSA cable shall be used when specified on the plans. IMSA cables shall be polyethylene insulated copper conductors, polyvinyl chloride jacketed, rated at 600 volts for use in underground conduit or as aerial cable conforming to IMSA Specification 19-1.

The IMSA 19-1 cable shall be provided with the number and size of conductors as specified on the plans. The colors and tracers shall be permanent and an integral part of the insulation and shall not be painted, surface coated or adhered to surface. Ink strips are unacceptable. Conductor insulation colors shall be standard IMSA colors (as shown by the following table). Cable conductor color, phase and interval assignments shall be in accordance with MCDOT Details 4799-1 and 4799-2.

(D) Telephone Communication Cable: Telephone communication cable shall be used when specified on the plans. Telephone communication cable shall be in accordance with IMSA Specification 40-2. Cable shall be 19 AWG, 25 conductor, solid, twisted pair, polyethylene jacketed, with a rating of 300 volts.

Conductor Number	Insulation Color	Stripe Color	Conductor Number	Insulation Color	Stripe Color
1	Black	---	11	Blue	Black
2	White	---	12	Black	White
3	Red	---	13	Red	White
4	Green	---	14	Green	White
5	Orange	---	15	Blue	White
6	Blue	---	16	Black	Red
7	White	Black	17	White	Red
8	Red	Black	18	Orange	Red
9	Green	Black	19	Blue	Red
10	Orange	Black	20	Red	Green

478.3. WIRING PROCEDURES:

478.3.1 General Requirements: All wiring shall be in conformance with the NEC and the requirements of these specifications. All wire nuts and other wiring devices shall be UL listed. Conductor sizes and colors shall be as specified on the Traffic Signal Plan conductor schedule. Conductors shall be pulled into runs in a smooth continuous

manner, avoiding contact with sharp objects that might damage the insulation. Approved lubricants shall be used for inserting conductors in conduit. Before installation, conductors' ends shall be taped for moisture protection until connections are made. Splices are permitted in pull boxes, pedestals and cabinets.

Conductors shall have a minimum of 36 inches of slack from the conduit end bell in the pull box.

All phase wiring shall be boxed at the intersection, terminated and spliced in the number seven (# 7) pull boxes.

478.3.2 Conductor Splices: Splices shall be made utilizing wire nut connectors (Ideal model numbers 451, 452 and 454, or approved equal). Wire stripping length and wire size combinations shall be in accordance with the manufacturer's instructions supplied with the wire nut connector. Soldered connections will not be permitted. All phases shall be spliced in all pull boxes and unused phase wiring shall be spliced to the ground rod in the controller cabinet.

Splices shall be dipped or brushed with a minimum of three coats of liquid waterproof splicing compound (3M Scotch Kote or approved equal). The finished splices shall be such that their electrical and mechanical characteristics and insulation quality are equal to those of the original cable.

478.3.3 Bonding and Grounding: All metallic enclosures such as cabinets, pedestals, poles, conduit and cable sheaths shall be bonded to form a continuous grounded system. Non-metallic portions of the system, such as PVC conduit, shall have a No. 8 AWG bare copper bond wire installed with suitable connections to form a continuous grounded system.

At each service disconnect, cabinet foundation, or where otherwise specified, an approved copper-plated ground rod shall be installed. Each ground rod shall be a one-piece solid rod of the copper weld type or approved equal and shall be a minimum of 5/8 inch in diameter and 10.0 feet long. The rod shall be driven vertically into the ground to a minimum 9.0 feet below the surface. If the rod cannot be driven vertically it shall be installed in accordance with article 250-83 of the NEC. The ground rod may be located in a pull box. The service equipment neutral (grounded conductor) and the system grounding conductor (No. 8 AWG bond, solid) shall be connected to the ground rod with a copper-plated bolt or a brass bolt on the ground clamp.

The grounding electrode system shall be in accordance with articles 250-81 and 250-83 of the NEC.

Pole foundations shall have 25 feet of number 4 AWG bare copper conductor coiled and placed at the bottom of the excavation before concrete is poured. Pole foundation grounding electrodes shall be connected to the pole grounding screw in the hand hole with an approved lug connector.

A ground resistance test shall be performed for each installed ground rod prior to final connection of the utility service. Pole foundation coil grounds shall be tested as determined by the Engineer in the field.

The ground resistance shall be measured with a three terminal, fall of potential, direct reading, battery powered earth tester with a 0.50 to 500 ohm scale or digital read-out. The 25 ohm reading shall be approximately at mid scale.

The test shall be performed according to the manufacturer's instructions and OSHA requirements. Two auxiliary copper clad ground rods shall be driven into the ground a minimum of 3 feet. The lateral spacing for each test rod shall be given in writing on the test report form and the spacing shall be approved by the Engineer.

All tests shall be performed in the presence of the Engineer and the test results shall be written down, dated and given to the Engineer for approval.

Each ground rod or foundation ground shall be isolated with the bond wires disconnected when the test is being performed. The resistance to ground shall be 25 ohms or less. If it is not, additional ground rods shall be installed as required at least 15 feet from the original ground and shall be bonded to it. The test shall then be repeated for multiple grounds as necessary to achieve proper grounding below 25 ohms. As many additional ground rods shall be installed as is necessary to achieve proper grounding of 25 ohms or less.

The test shall be performed when the soil is dry. The contractor shall not add any chemical, or salt solutions to any portion of the grounding system. All grounding rods and foundation grounds to be tested shall be installed a minimum of ten days prior to testing unless otherwise determined by the Engineer in the field.

478.4 MEASUREMENT:

Conductors for traffic signals and intersection lighting will be measured on a lump sum basis.

478.5 PAYMENT:

Conductors, measured as provided above, will be paid for at the contract lump sum price, which price shall be full compensation for the item, COMPLETE IN PLACE.

Part 400 add the following new Section:

SECTION 480

INTELLIGENT TRANSPORTATION SYSTEM GENERAL REQUIREMENTS

480.1 DESCRIPTION:

This work shall consist of furnishing and installing Intelligent Transportation System (ITS) field devices in accordance with the project plans, requirements of these specifications, and the special provisions.

ITS elements generally consists of such devices as fiber optic cable and other communications infrastructure, closed circuit television cameras (CCTV), and dynamic message signs (DMS).

All ITS components and appurtenances shall be complete and functional, have successfully passed specified testing, be compatible with existing MCDOT equipment, and be in operating condition at the time of acceptance.

480.2 MATERIAL/EQUIPMENT REQUIREMENTS AND TECHNICAL QUALIFICATIONS:

480.2.1 Environmental: All field installed electronic equipment shall meet the minimum environmental requirements of Section 2, Environmental Requirements of the NEMA Standards Publication TS 2, *Traffic Controller Assemblies with NTCIP Requirements*, including, but not limited to:

1. Operating Voltage and Frequency
2. Power Interruption;
3. Temperature and Humidity;
4. Transients, Power Service and Input-Output Terminals; and Nondestruct Transient Immunity;
5. Vibration; and
6. Shock.

All equipment exposed to the environment shall be corrosion resistant. All connections shall be watertight. Above ground equipment enclosures shall be designed to withstand 80 mph winds with a 30% gust factor and to withstand the effects of sand, dust, and hose-directed water per the hose down test described in NEMA Standards Publication 250, *Enclosures for Electrical Equipment (1000 Volts Maximum)*.

480.2.2 Grounding: Grounding shall meet the requirements of Section 478.3.3.

480.2.3 Power: Electronic equipment and power supply shall meet the minimum power requirements of NEMA Standards Publications TS 2, Section 2, Environmental Requirements.

480.2.4 Surge Protection: All equipment shall be provided with a 350-volt surge protector at the input power point. The surge protector shall reduce the effects of power line voltage transients and shall have ratings as follows:

Impulse Breakdown	less than 1,000 Volts in less than 0.1 microseconds at 10 kiloVolts per microsecond
Standby Current	less than 1.0 milliAmpere
Striking Voltage	350 Volts D.C.

All equipment shall be capable of withstanding 15 pulses of peak current each of which will rise in 8.0 microseconds to one-half the peak voltage at three-minute intervals. The peak current rating shall be 20,000 amperes.

All wire, ground, and bond equipment required to complete the surge protection shall comply with Section 250-86 of the NEC.

480.2.5 Electrical Equipment Regulations and Codes: All electrical equipment shall conform to the current standards of the National Electrical Manufacturers Association (NEMA), National Electric Safety Code (NESC), Underwriters' Laboratory Inc. (UL), or the Electronic Industries Association (EIA), when applicable. Material and workmanship shall conform to the requirements of the National Electric Code (NEC).

480.2.6 Approval of Material and Equipment: All materials and equipment shall be approved by the Engineer prior to ordering. Any work incorporating materials or equipment not previously approved shall be performed at the Contractor's risk. Such materials or equipment may be subject to removal or replacement at the discretion of the Engineer.

At the pre-construction conference the Contractor shall submit to the Engineer one CD-ROM disk with electronic PDF files and four (4) printed copies of all proposed ITS materials and equipment with associated pay items identified. The submittal shall contain a listing of all proposed ITS materials and equipment together with product data, shop drawings, Certificates of Compliance, and warranty information. To be acceptable, the submittal shall identify the contract, the materials and equipment list shall be complete, and contain all ITS items supplied on the project by the Contractor, including pre-approved items. All items on the list shall be identified by manufacturer's part number, model, included or excluded options, specification, or other pertinent catalogue information to allow the County to procure exact replacements of all items on the project. MCDOT reserves the right to reject an incomplete or unclear material submittal. All equipment and materials require the Engineer’s approval prior to ordering. One (1) copy of the submittal will be returned to the Contractor for further action.

There shall be no substitutions for approved materials or equipment without the written approval of the Engineer. Proposed changes to approved materials or equipment shall be submitted in writing to the Engineer for review and approval. If requested by the

Engineer, the contractor shall submit samples of the proposed materials for inspection, testing, and approval. All material and equipment shall be new.

The Contractor shall provide complete wiring diagrams for controller assemblies and auxiliary controller cabinets at the time of delivery. When requested by the Engineer, a Mylar original and four sets of prints shall be provided with each controller assembly. The wiring diagram shall illustrate all circuits and components in detail. All components shall be identified by name or number so as to be clearly defined in the drawings.

480.2.7 Certificates of Compliance: The Contractor shall submit to the Engineer originals or copies of Certificates of Compliance for all Contractor-supplied items. The submittal shall include identification of the project by Project Number and Title.

If requested by the Engineer, the Contractor shall furnish laboratory results or independent certifications that substantiate compliance with the stated requirements. Materials or equipment covered by the certificate may be sampled and tested at any time, and, if found not in conformity with the requirements of the project plans or specifications, will be subject to rejection.

Certificates of Compliance shall contain the following information:

1. A description of the material or equipment supplied;
2. Means of material identification, such as label, lot number, or marking;
3. Statement that the material complies in all respects with the contract specifications. When identified in the specifications, certificates shall state compliance to specific cited standards, such as RUS 1755.900, NEMA TS 2, etc. and specific required tests, such as burn-through testing for fiber optic conduit;
4. Clearly state any exceptions to the requirements of the specifications; and
5. The name, title, and signature of a person having legal authority to bind the manufacturer or the supplier of the material. The date of the signature shall also be given. The name and address of the manufacturer or supplier of the material shall be shown on the certificate. A copy or facsimile reproduction (fax) will be acceptable; however, the original certificate shall be made available upon request. The person signing the certificate shall be in one of the following categories:

    - An officer of a corporation.
    - A partner in a business partnership or an owner.
    - A general manager.
    - Any person having been given the authority in writing by one of the three listed above.

480.2.8 Maricopa County Furnished Material and Equipment: Material and equipment furnished by Maricopa County Department of Transportation will be made available to the Contractor as specified in the contract documents. All specified items will be available at the following address:

Maricopa County Department of Transportation Warehouse
2222 South 27th Avenue
Phoenix, Arizona 85009-6357

The Contractor shall call (602) 506-4885 forty-eight hours prior to pick-up.

The cost of handling and installing all material and equipment shall be included in the contract price for the respective item.

The Contractor shall be responsible for all material and equipment collected from the warehouse. The cost to make good any shortages or deficiencies from any cause or for any damages that occur after transfer will be deducted from any monies paid to the Contractor.

480.3 CONSTRUCTION:

480.3.1 Cable and Active Electronics Labeling and Management: The Contractor shall provide labeling for all Contractor-installed cables. Labeling shall be done in a neat, professional manner using permanent methods and products approved by the Engineer for each label scenario. At a minimum, the Contractor shall label the following:

1. Trunk line and branch cables at pull boxes, cabinets, racks, and other points of entry with the appropriate cable identification number. Permanently marked, removable cable sleeves shall be used;
2. Both ends of jumper cables and pigtails;
3. The jumper cable (front) side of patch panels, the labeling of which shall be in sequence and in a consistent manner throughout the project; and
4. All active electronics, the labeling of which shall include the device location, name, IP address, subnet mask, gateway, and VLAN.

The Contractor shall provide cable routing and management in a neat and professional manner. Cables shall be grouped and neatly tied to the sides of racks when applicable. Slack or excess cables shall be neatly coiled, tied, and stowed. Cables shall be looped independently of one another. Cable ties shall encompass the cable loops of one cable per cable tie, applying ties to each cable individually. Cable ties shall be tightened to prevent cable slippage, but not deform or damage the cable sheath. Strain relief shall be provided for fiber optic cable, jumpers, and pigtails.

480.3.2 Labor and Supervision: The Contractor shall furnish technically qualified labor and supervision with experience in the construction of the ITS field devices and communications equipment specified within the project's contract documents.

The Contractor shall have on the work site at all times a competent supervisor experienced in the construction of ITS field devices and communications equipment specified by the contract documents. When construction involves traffic signals, the Contractor's supervisor shall possess an International Municipal Signal Association (IMSA) Level II Traffic Signal Electrician Certification.

(A) Technical Qualifications: The Contractor shall submit the technical qualifications of installation and supervisory personnel to be used for construction of ITS facilities to the Engineer at the pre-construction conference. The Contractor or subcontractor personnel must be certified by the manufacturer or have an industry standard certification prior to the installation and/or integration of the designated ITS equipment. The installation and configuration personnel shall have the following years of experience in addition to the certification levels as outlined below:

1. Fiber Technician – Minimum is Electronics Technicians Association (ETA) Fiber Optical Installer (FOI) certification or manufacturer fiber certification with five years of hands-on experience.

A year of experience can be waived if a higher level of certification in the appropriate field is possessed.

A copy of a resume with five project references and three professional references may be submitted for consideration of approval for individuals not meeting the required certification and experience levels.

480.3.3 Plans and As-Built Drawings: Plans graphically describe the location of component parts. Where dimensions on the plans are given, they shall govern over scaled dimension.

After completion of the project the Contractor shall provide the Engineer with a set of as-built drawings on clean prints of the original drawings. The as-built drawings shall indicate in a neat and accurate manner all changes and revisions to the original design. As-built drawings shall be submitted before final payment for completed work will be made.

480.3.4 Testing: The Contractor shall demonstrate that the equipment and the systems furnished and installed are fully functional as specified in the contract documents. The Contractor shall furnish and maintain all required test equipment.

The Contractor shall conduct or support during project implementation the following tests:

1. Design Approval Test (DAT) (when required);
2. Factory Demonstration Test (FDT) (when required);
3. Factory Acceptance Test (FAT) (when required);
4. Stand-Alone Test;
5. Subsystem Test (SST) (when required));
6. Systems Integration Test (SIT) (when required); and
7. System Acceptance Test (SAT)].

(A) Test Procedures, Testing, Forms, and Software: The Contractor shall prepare test procedures, a testing quality control plan, and forms for recording data and reporting results. The Contractor shall obtain software (when specified) for all required testing procedures. It is recommended that the Contractor request from the Engineer copies of testing procedures approved and used on prior projects.

(1) Approval of Test Procedures, Testing Plan, Forms, and Software: The Contractor shall submit test procedures, the testing plan, data recording/results reporting forms, and software to be used to the Engineer for approval at least 45 calendar days before the scheduled testing. The Engineer will review the submitted procedures, data forms, and software and return them within 14 calendar days after receipt. If approved, tests may be conducted as scheduled. If rejected by the Engineer, the rejected item(s) shall be revised accordingly by the Contractor. The Contractor shall resubmit the revised item(s) to the Engineer for another review. The tests shall be rescheduled. The Contractor shall highlight the portions of the submittal that has changed to aid the Engineer's re-review of the material. Extension of the schedule will not be granted for rejected test procedures, testing plans, data recording or results reporting forms, and/or software.

As a minimum, the Contractor shall prepare test procedures, data recording and results reporting forms that include the following:

i. A step-by-step outline of the test sequence to be followed, showing a test of every function of the equipment or system to be tested;
ii. A description of the expected operation, pass/fail criteria, and test results;
iii. A data recording form to be used to record all data and quantitative results obtained during the test;
iv. A results reporting form that clearly and concisely conveys the test results; and
v. A description of any special equipment, setup, manpower, or conditions required for the test.

As a minimum, the Contractor's testing plan shall include the following:

- Acceptance testing of all supplied components;
- Physical and functional testing of all modules; and
- A minimum of 100-hour burn-in of all modules.

(2) Scheduling and Conducting Tests: The Contractor shall conduct tests in the presence of the Engineer's authorized representative using the approved test procedures. The Contractor shall notify the Engineer of the time, date and place of all tests at least 14 calendar days prior to the date on which a test is planned. The Engineer may waive the right to witness certain tests.

The Contractor shall ensure that all equipment to be tested is ready for testing prior to the performance of, and the Engineer's witnessing of, the tests. Costs for transportation, meals, and lodging for the Engineer and his representatives that are associated with delays in the testing will be deducted from monies due, or to become due, or owed to the Contractor.

The contract period will not be extended for time loss or delays related to testing.

All test data forms shall be signed by the Contractor or authorized representative. When tests are witnessed by the Engineer, the Contractor shall obtain the witnessing Engineer's signature on the test data form.

(3) Reporting of Test Results: The Contractor shall submit the test results to the Engineer using approved test data forms. The Engineer will review the test results for conformance with the requirements of the contract documents. If the equipment or systems fail any part of the test, the Contractor shall make necessary corrections and repeat the entire test.

(B) Design Approval Test (DAT): A DAT shall be conducted when required by the special provisions. A DAT verifies that certain design parameters are satisfied. The Contractor shall provide certification from the manufacturer for the following:

1. The equipment has been laboratory tested and meets or exceeds the environmental requirements of the specifications. The test results and passing criteria for each required test shall be specifically listed.
2. The equipment meets the functional requirements stated in the specifications, and is suitable for the intended application.

The certification shall state any requirements that are not met or have not been laboratory tested. Test procedures and results, or independent laboratory certification shall be made available upon request.

DAT certification shall meet the requirements for Certificates of Compliance. If a DAT and a Certificate of Compliance is required for the same equipment, both requirements may be satisfied by a single Certificate of Compliance.

Submit DAT certification with the equipment submittal data for Engineer's approval.

There is no DAT requirement for equipment that will be furnished by or has been previously tested by MCDOT or certified for use in prior projects where the application is consistent and results deemed favorable. The Contractor should contact MCDOT for information regarding the DAT or certification status of a particular device.

(C) Factory Demonstration Test (FDT): A FDT shall be conducted when required by the special provisions. A FDT is performed on a production unit and verifies that the equipment meets the functional requirements. The FDT requirement for models of equipment previously tested and/or certified by MCDOT for the types of applications required in the project may be waived by the Engineer.

To gain a waiver, the Contractor shall submit certification from the manufacturer stating that the equipment has been tested and meets all the project requirements. The Contractor shall provide or obtain from the manufacturer a statement of any exceptions or requirements not covered by the testing and supporting information such as test procedures, data, and results.

Costs for lodging and transportation for the Engineer and his representatives to witness the FDT, will be borne by MCDOT, for one visit lasting for up to five (5) consecutive days.

In the event, the FDT requires multiple visits by the Engineer or lasts longer than five consecutive days, the Contractor shall be responsible for the added cost of transportation and lodging beyond what is covered by the County.

(D) Factory Acceptance Test (FAT): A FAT shall be conducted on each unit of equipment when required by the project specifications. The FAT verifies that each unit of equipment as it comes off the production line operates as specified. The FAT shall verify proper operation of all required functions. The Contractor shall submit a full test report of the quality control and the final test conducted on each item for approval. The Contractor shall not deliver the equipment until the FAT results have been approved by MCDOT. The test report shall indicate the name of the tester and shall be signed by the responsible party representing the supplier.

Cabinet Assemblies: For cabinets and cabinet assemblies the quality control procedure shall include a minimum of 24 hour operation of all cabinet assemblies.

The FAT for each cabinet assembly shall include complete testing for all units and the testing of every item or device furnished in the controller cabinets.

Each complete assembly unit shall be subject to a full cycling and timing test (when applicable).

(E) Stand-Alone Test: A stand-alone tests verifies that after installation but prior to interconnection, the equipment operates as specified and is capable of performing the function(s) for which it was designed.

The Contractor shall conduct approved stand-alone tests on each equipment group that performs a specific function. In addition to the general requirements described below, there may be additional testing requirements for a particular device provided in the specifications for that device. Testing is to use the manufacturer's approved software after the on-site installation of the equipment group is completed. Using the manufacturer's approved software, the Contractor shall demonstrate that:

- Inputs and outputs of each unit are tested and operate properly;
- Character displays and indicators operate properly under the full range of ambient lighting conditions;
- Each item of equipment operates properly; and,
- Each control cabinet assembly operates properly, when assembled and connected to all equipment it houses.

The supplier shall furnish all necessary test equipment and test software.

(F) Subsystem Test (SST): A SST shall be conducted when required by the special provisions. A SST verifies that units forming a subsystem continue to operate as specified when they are interconnected. A subsystem is defined as a logical grouping of field devices and/or central equipment that when interconnected and communicating is

capable of performing the function for which it was designed (i.e., CCTV cameras, communications to/from the cameras, central control and display of the video images). Before conducting any SSTs, the Contractor shall submit the proposed test methods to the Engineer for approval. The Contractor shall conduct approved SSTs for the field equipment and related equipment at the hubs and the Traffic Management Center (TMC). After the equipment has been installed and interconnected, the Contractor shall conduct SSTs on groups of equipment identified in the specifications or the special provisions for a particular device, such as CCTV cameras or Dynamic Message Signs.

Subsystem tests shall not be considered successful until all equipment being tested is operational without failure for 72 consecutive hours.

(G) System Integration Test (SIT): A SIT shall be conducted when required by the special provisions. A SIT is performed when previously untested hardware or software is developed and/or added to an existing system to verify that all system interfaces perform properly prior to final acceptance. The Contractor shall begin the SIT upon completion of all required SSTs. The Contractor is responsible to keep the installed equipment operational during the system final integration testing. The Contractor shall identify the SIT in the project schedule. The duration of the SIT shall be based on the complexity of the design. The Contractor shall work with the Engineer to troubleshoot all problems related to non-specification compliant equipment and interfaces.

(H) System Acceptance Test (SAT): A SAT verifies that all interconnected subsystems operate together as one system. The SAT consists of a 30-day test period demonstrating that the total system (hardware, software, materials and construction) is properly installed, is free from identified problems, exhibits stable and reliable performance, and complies with the contract documents.

The Contractor shall demonstrate all system functions using live control equipment. The Contractor shall test all normal and backup functions of redundant system equipment and include in the SAT any emergency conditions for which the equipment is designed to respond.

The Contractor shall troubleshoot, diagnose, identify, and isolate hardware and software problems and inconsistencies; formulate possible solutions; and implement all corrections needed for Contractor installed equipment.

The Contractor shall make available on-site, key technical personnel familiar with the design and construction of each major system component within 48 hours of notification of a problem.

The Contractor shall correct all system documentation errors, omissions, and changes discovered and resulting from the SAT and any previous testing. The system will not be accepted by the Engineer until corrected documentation is submitted.

Failure of any item to meet the requirements for any test will be counted as a defect and the equipment under test will be subject to rejection by the Engineer. In the event of a failure of a single piece of equipment during the SAT, the Contractor shall replace or repair the equipment and restart the 30-day test only for that piece of equipment. If the failure of the single piece of equipment prevents the proper operation of other equipment (e.g., failure of the video encoder prevents proper camera control), all devices affected by the failure will have the test extended by however many days they were out of service.

Rejected equipment may be re-tested provided all areas of non-compliance have been corrected and evidence thereof is submitted to the Engineer by the Contractor. For equipment that has failed and subsequently been repaired or modified, the Contractor shall prepare and deliver a report to the Engineer that describes the nature of the failure and the corrective action taken. Re-design and modification of failed equipment shall be done at no additional cost to the County. Any Contractor supplied item that fails three (3) times will not be considered again for the project. The Contractor shall propose a replacement item with equal or greater functionality.

The following conditions constitute a minor system failure and will result in a suspension of time during the 30-day SAT. After satisfactory remedial action, the 30-day test will be resumed and extended one additional day:

1. Interference with project operations due to vandalism, traffic accident, power failure, or lightning for which lightning protection devices as specified are not sufficient protection;
2. Failure to complete the objective of any test scenario due to lack of adequate documentation for equipment supplied by the Contractor. The Contractor shall re-test using revised documentation; and
3. Intermittent hardware, software, communication, or operation control malfunctions.

The following constitutes a major system failure. Any one of the following conditions shall result in re-initialization of the SAT from day zero:

1. Failure of any hardware or performance item within a 14-day period; and
2. Failure to correct within four hours of notification by the Engineer or his representatives any problem that may adversely impact the safety of the traveling public.

Upon successful completion and acceptance of the SAT, the project will advance to the warranty and operational support period.

480.4 WARRANTIES AND GUARANTIES:

The Contractor shall deliver to the Engineer prior to acceptance of the project all manufacturer's warranties and guaranties for materials and equipment installed by the

Contractor. The Contractor shall comply with the requirements of Section 108.8 and the following:

For Contractor-furnished materials, if specific warranty requirements apply, they are listed under specific equipment requirements of the specifications. The cost of warranties and repairs shall be included in the contract unit price.

Within 60 days following approval of material and equipment, the Contractor shall submit a preliminary Warranty Administration Plan (WAP) for Contractor supplied equipment and materials to the Engineer for approval. The WAP is to address how the warranty period shall be administered and who will be responsible for each item. At a minimum, it shall:

1. Provide contact information (manufacturer name, business address, position or title of contact person, email address, and telephone number, etc.) for each manufacturer of Contractor-furnished equipment;
2. Provide a way to track each repair performed during the warranty period by serial number that accounts for removals, replacements, and repaired items put back in service or into the spare inventory; resets the warranty period for all repaired or replaced items, and establishes a new warranty period for all new items;
3. Provide a schedule and summary of all routine maintenance activities required per vendor recommendations, whether or not they fall within the one-year warranty period;
4. Provide a complete list of equipment and vendor warranty periods, including spare equipment using Figure 480.1 or a similar approved form; and
5. Provide copies of all warranty paperwork.

The Contractor shall submit a final WAP to the Engineer for approval at least 45 days prior to final acceptance. An approved final WAP is required prior to final acceptance.

As part of the final WAP, the Contractor shall submit the following to the Engineer for approval:

1. A complete list of all pieces of equipment (by serial number) that have warranties extending beyond the one year warranty period, including spare equipment, using Figure 480.1 or a similar approved form; and
2. All warranty paperwork extending beyond the one-year period, transferring ownership of the warranties to MCDOT.

Figure 480.1 – Equipment Warranties

Project Name
Equipment Warranties

Submitted by: _____

_____

Date:_____

Project No.:_____

Federal Project No.:_____

Serial #	Description	Location	Warranty Duration	Expiration Date	Date Received	Other Information

480.5 DOCUMENTATION:

The Contractor shall deliver maintenance manuals to the Engineer for all furnished equipment except conduits, pull boxes, and fiber optic cable. The manuals shall be supplied in durable, loose-leaf, three ring binders of appropriate size. All sections shall be permanently titled and have pages numbered and indexed. In addition, an electronic copy of all manuals shall be provided for all equipment and software.

Maintenance manuals shall be formatted in two sections that include the following material for all furnished equipment and components:

Section 1

- Description for each type of equipment and its components.
- Description of operation.
- Troubleshooting procedures at system and device levels.
- Preventative maintenance and adjustment procedures.
- “As-built” drawings including block diagrams, signal path, and detailed device and system connection diagrams (reference Section 480.3.3).

- Equipment source reference including manufacturer and nearest authorized service centers along with associated addresses and telephone numbers.
- Final Warranty Administration Plan.

Section 2

- Manufacturer's operation and installation.
- Manufacturer's service and repair guides.

Part 400 add the following new Section:

SECTION 481

FIBER OPTIC CONDUIT AND PULL BOXES:

481.1 DESCRIPTION:

The work under this section shall consist of furnishing, installing, and testing fiber optic conduit, warning tape, duct plugs, and pull boxes.

In lieu of trenching where indicated on the project plans, the Contractor may propose to install fiber optic conduit by means of directional drilling at no additional cost to the County.

481.2 MATERIALS:

481.2.1 Fiber Optic Conduit: All conduit and conduit fittings shall be listed by UL, and conform to NEC standards.

PVC conduit shall conform to the requirements of UL 651 standard for Rigid Nonmetallic Conduit and NEMA TC 2 Electrical Polyvinyl Chloride (PVC) Tubing and Conduit. PVC conduit and conduit fittings shall be Schedule 40, heavy wall, manufactured from high impact material and shall be rated for use at the electrical wire temperature of 90 degrees C. PVC conduit bends shall be factory made in increments of 11.25, 22.5, 45, and 90 degrees. Field bending of PVC conduit is not permitted.

PVC conduit shall be properly marked with the NEMA TC-2 and UL 651 designation on the outside.

All conduits to be installed by means of directional drilling shall be HDPE.

The HDPE formulations used by the manufacturer must be specifically intended for conduit applications in accordance with ASTM F2160: Solid Wall High Density Polyethylene (HDPE) Conduit Based on Controlled Outside Diameter (OD). The HDPE conduit shall be of dimension ratio DR 11 or better. It shall have a cell classification of

PE334470C (for black conduit) and PE334470E (for colored conduit) per ASTM D3350: Standard Specification for Polyethylene Pipe and Fittings Materials.

HDPE conduit shall be properly marked with the ASTM F2160 and UL 651A designation on the outside.

All rigid metallic type conduits shall be manufactured of galvanized steel conforming to requirements of UL 6 for Rigid Metallic Conduit and to NEC standards. All exposed conduit and conduit fittings to be installed above ground shall be rigid metallic type.

Bends used for fiber optic conduit runs shall comply with the following requirements:

Conduit Size	Min. Radius
2”	24”
2-1/2”	30”
3”	36”
4”	48”

481.2.2 Multiduct Conduit: Multiduct conduit is described as one of the following:

1. A manufactured and connectable system consisting of a pre-assembled outer duct with fours (4) inner ducts, or

2. A manufactured and connectable system consisting of four (4) conduits with spacers for direct bury without an outer duct.

Multiduct conduit shall be marked with a longitudinal print line with the wording “Install This Side Up” or approved equivalent to assure proper innerduct/conduit orientation and alignment. Male ends of multiduct conduit shall have circumferential insertion depth marks to provide a visual indication that proper insertion is achieved.

The outer duct of multiduct conduit to be installed underground by means of trenching or in concrete structures shall be HDPE conduit with a Standard Dimensional Ratio (SDR) of 11 or better, or rigid polyvinyl chloride (PVC).

(A) Outerduct with 4 Rigid Innerducts: This multiduct is pre-manufactured with an outerduct and 4 rigid innerducts and shall be used only with the approval of the Engineer or if indicated on the plans. This multiduct shall meet the following requirements:

Outerducts shall be a minimum nominal size of 4 inches, constructed of HDPE or PVC. Outerduct bends shall have a minimum radius of 4 feet and shall be available from the multiduct manufacturer in increments of 11.25, 22.5, 45, and 90 degrees.

Rigid Innerducts shall be fabricated using HDPE or PVC for straight sections, and HDPE for bends. Innerducts shall contain, or be factory treated with, a friction reducing material

that is dry-to-the-touch. Innerducts shall meet the requirements of Telcordia GR-356-CORE (also known as Bellcore GR-356) and the following:

1. Innerducts shall have a nominal diameter of 1.2 inches and shall have a minimum wall thickness of 0.1 inch.

2. All four rigid innerducts shall be a different color with color coded nylon pull tapes. Colors for the pull tape shall be one white, one black, one red, and one orange. Pull tapes shall be placed in the innerducts so that the white pull tape is placed in the innerduct located directly below the outerduct longitudinal print line followed by the black, red, and orange pull tapes in sequential order. Pull tape color shall be consistent throughout the project.

(B) Duct Bank - 4 Rigid Conduits: This multiduct shall be pre-assembled with 4 rigid PVC or HDPE conduits locked together in formation using spacers with tie downs located no more than 5 feet apart along the multiduct. PVC shall be schedule 40 and HDPE conduit shall be DR 11. This type of multiduct shall be used only with the approval of the Engineer or if indicated on the plans. Rigid conduits shall meet the friction reducing material and pull tape requirements for rigid innerducts of section 481.2.2(A).

481.2.3 Geotextile Fabric Innerducts: Geotextile Fabric Innerduct to be installed in fiber optic conduit shall have three cells and be fabricated using an engineered, geotextile mesh fabric material composed of nylon and polyester. Geotextile fabric innerduct shall not be installed in conduit of less than 2 inch nominal size.

Each cell shall have a separate color coded pull tape with the colors white, black, and red.

481.2.4 Conduit and Innerduct Plugs: Conduit plugs, caps, or fittings for sealing empty conduit and occupied conduit shall be durable, easily removable, reusable, and produce a watertight seal. Plugs, caps, and sealing fittings shall be designed for the diameter of the conduit and cable, shall cause no damage to the cable when installed, and shall have a rope tie on the inside end for connection of a pull tape. Plugs, caps, or sealing fittings used for fiber optic conduit shall provide a watertight and airtight seal of at least 20 psi. Plugs that seal conduits containing fiber optic cable shall be of the split design to allow installation and removal around in-place cables. Plugs, caps, or sealing fittings shall be approved by the Engineer.

481.2.5 Coupling bodies shall be incorporated in all lengths of multiduct, bends, and fittings to seal between the outerduct and innerducts. Coupling bodies shall facilitate field assembly of the multiduct sections without the use of lubricants. Sealing components within the coupling bodies shall be of an anti-reversing design to keep the multiduct conduits together without the use of cement. Coupling bodies shall allow for innerduct movement due to expansion/contraction without affecting the innerduct sealing. ‘Clam-Shell’ type couplings shall not be used to repair broken conduits.

481.2.6 Multiduct terminations used at end of multiduct runs at junction boxes, cabinets, etc. to seal the innerduct to the outerduct shall be durable and fabricated without metallic parts except nuts, bolts, washers and fasteners which shall be stainless steel. Terminations shall provide a watertight and airtight seal of at least 20 psi.

Conduit terminations at pull boxes, cabinets, etc. that contain geotextile fabric innerducts shall be sealed with a termination kit recommended by the fabric innerduct manufacturer. The termination shall provide an airtight seal and shall be reusable to allow future cable installation.

481.2.7 Conduit Spacers and Tie Downs: Conduit spacers and tie downs shall be dielectric and have sufficient strength to support the conduits in a straight line above the bottom of the trench.

481.2.8 Fiber Optic Conduit Warning Tape: Conduit warning tape shall be a four (4) mil inert plastic film specially formulated for prolonged use underground and shall be a minimum of 3 inches wide. All tape shall be highly resistant to alkalis, acids, and other destructive agents found in soil.

Tape shall have a continuous printed message warning of the location of underground conduits. The message shall be in permanent ink formulated for prolonged underground use and shall bear the words, ‘FIBER OPTIC CABLE BURIED BELOW' in black letters on an orange background.

481.2.9 Fiber Optic Pull Boxes: Pull box and pull box covers shall conform to requirements of ANSI/SCTE 77 Specification for Underground Enclosure Integrity and MCDOT standard details.

(A) Pull Boxes: Pull boxes shall be compliant with the test provisions of ANSI/SCTE 77: Specification for Underground Enclosure Integrity. Type A through D pull boxes shall meet the ANSI/SCTE Tier 22 load test requirements. Type E pull box shall be rated for AASHTO HL-93 Design Truck wheel loading.

Type B through E pull boxes shall have provisions for lashing coiled cable and installation of underground splice closures.

Type A through D pull boxes shall be manufactured of polymer concrete material. Type E pull boxes shall be manufactured from precast reinforced concrete material.

(B) Pull Box Covers: Pull box covers shall comply with the test provisions of ANSI/SCTE 77: Specification for Underground Enclosure Integrity.

Type A through C pull box covers shall be split type covers manufactured of polymer concrete material and shall meet the ANSI/SCTE Tier 22 load test requirements.

Type D pull box covers shall be of the ‘torsion-assist’ type and manufactured of diamond plate galvanized or mild steel. Type D covers shall be rated for a static design load of 10,400 lbs. over a 10 inch x10 inch steel plate.

Type E pull box covers shall be of the ‘torsion-assist’ type and manufactured of A-36 steel plate and structural shapes. Type E covers shall be rated for AASHTO HL-93 Design Truck wheel loading.

The torsion assist lids shall open to 180 degrees, have a failsafe lid lock in open position and have locking hardware made of stainless steel or galvanized steel. The lid shall provide torsion assistance in both directions and shall be of a galvanized steel spring mechanism. Hydraulic or fluid systems shall not be used for torsion assistance. The effort required to open or close the torsion assist lids shall not exceed 30 pounds of force.

Pull box covers shall provide a skid resistant surface. The dry static coefficient of friction shall be 0.6 or higher and the wet static coefficient of friction shall be 0.5 or higher as determined by ASTM C1028 or an equivalent test method.

Pull boxes covers shall be equipped with pull slots with a minimum width of 1/2 inch. The pull slots shall be rated for a minimum pulling force of 3,000 pounds.

Pull box covers shall have the message “MCDOT ATMS” cast in with nominal 1 inch high letters.

Type A through C covers shall be equipped with provisions for attaching #8 AWG tracer wire to the underside of one half of the split covers with access to trace wire connections from outside the unopened cover. The same side of the split covers shall have provisions for five directional labels to be installed on the outside of the cover. The directional labels shall be of UV resistant polycarbonate material and shall be installed with high strength adhesive.

(C) Conduit Terminator Ends in Pull Boxes: Conduit terminator ends installed in pull boxes shall be of injection molded Schedule 40 PVC material.

(D) Cable Racks and Hooks: Cable racks and hook installed in ITS pull boxes shall be manufactured from hot rolled steel material and hot dipped galvanized per ASTM 123/A153.

The Cable racks shall be manufactured from a 1-1/2 inch x 9/16 inch x 3/16 inch hot rolled steel section and shall have ‘T’ slots installed at 1-1/2 inch spacing.

The cable hooks shall be manufactured of 3/16 inch hot rolled steel and shall have a smooth top surface to prevent damage to fiber optic or communication cables.

481.2.10 Pull Tape: The pull tape used shall be the flat type, Kevlar weave, each meter or foot marked sequentially for easy identification of distance, designed and constructed not to stretch or spring, and shall have a minimum tensile strength of 2500 lbs.

481.2.11 Product Certification: The Contractor shall furnish a Certificate of Compliance from the manufacturer or DAT certification for the following tests:

(A) Fiber Optic Conduit: Bends for fiber optic conduit and innerduct shall conform to the requirements of the following tests for burn resistance and friction:

1. Burn resistance: Perform the burn resistance test on conduit bend or innerduct wrapped around and secured to a rigid form. Thread an appropriate length of 0.25 inch diameter braided polyethylene pull tape through the conduit/innerduct and sew the ends together to create a continuous loop. The loop of pull tape shall be wrapped around a powered capstan and drawn away from the test sample to provide a continuous tension of 450 lbs. Draw the tape continuously through the sample with the powered capstan at a rate of 480 feet per minute. The sample shall not burn through within 90 minutes.

2. Friction: Conduit and innerducts shall have a coefficient of friction of 0.09 or less when tested in accordance with Bellcore GR-356.

Coupling bodies, for multiduct, shall be tested for water tightness and air tightness and burst strength at 73 $\pm$ 4 degree F with a relative humidity of 50 percent, in accordance with the following procedures:

1. Water tightness (outerduct): Two lengths of multiduct (one factory bell and one factory spigot end) shall be joined without the use of force other than that required by hand. The center of the section of the multiduct conduit containing the joint shall be enclosed within a housing suitable for containing water at or above a positive pressure of 20 psi or a water column of 12 feet. The enclosure shall be sufficiently filled with water to completely cover the conduit joint within. A regulated air pressure of 20 psi or a water column of 12 feet above the joint shall be applied to the interior of the enclosure by way of a sealed connection. The ends of the multiduct shall protrude through the sealed exterior of the housing in order to facilitate inspection for leakage of water to the inside. The multiduct assembly shall not show signs of leakage for a period of 24 hours.

2. Air tightness (innerducts): Two lengths of multiduct (one factory bell and one factory spigot end) shall be fully joined without the use of force other than that required by hand. One end of an innerduct shall be sealed with a plug. The opposite end of the same innerduct shall be fitted with a plug and hose assembly for application of air pressure. Air pressure shall be applied until the pressure within the test sample is 125 psi. The coupling assembly shall hold the pressure of 125 psi for five minutes. The above procedure shall be repeated on each remaining innerduct.

3. Burst Strength (innerducts): The burst strength of the innerducts shall be tested at 125 psi per procedure outlined in Bellcore GR-356-CORE.

(B) Fiber Optic Pull Boxes: The Contractor shall provide DAT certifications that demonstrate that pull boxes and pull box covers comply with the loading requirements.

481.3 CONSTRUCTION

481.3.1 Fiber Optic Conduit: Conduit shall be furnished and installed at the locations and of the sizes shown on the plans. At no additional cost to the County the Contractor may use a larger size conduit than specified, provided it is continuous for the entire length of the run from outlet to outlet. Size reduction couplings will not be permitted. Changes to the location and size shown on the project plans shall be documented by the Contractor on as-built plans and submitted to the Engineer. Geotextile innerduct shall only be installed by the cable/conductor installer along with the fiber optic cable in one operation.

Underground conduit shall be installed in a straight line from pull box to pull box and/or from foundation to pull box, all exceptions must be approved by the Engineer prior to installation. All conduit installations shall be one continuous run of a single size and a single type of conduit. Any change in conduit routing must be approved by the Engineer and documented by the Contractor on as-built plans.

When obstructions are encountered during installation, the obstruction may when approved by the Engineer, be bypassed by deflecting the conduit at a rate of at least 10:1. Where a 10:1 deflection is not possible, a minimum 4 foot radius and maximum 90 degree bends or flexible bends may be used at locations approved by the Engineer. Conduit runs between any two pull boxes shall not employ more than 4 bends, or exceed an angular sum of 270 degrees in all directions (vertical and horizontal).

All conduit installed under existing pavement shall be installed using horizontal directional drilling per Section 608. Open trench excavation across an existing roadway shall not be allowed without the written permission of the Engineer.

Conduit spacers shall be used to arrange multiple conduits in the trench and shall provide a minimum of 1-1/2 inch between conduits. Spacers shall be used at intervals not exceeding 5 feet on-center, or the conduit manufacturer's recommendations, whichever is less. Spacers shall remain upright and not collapse during backfilling, compaction, and pavement installation operations.

Fiber optic conduit shall enter pull boxes at the bottom, extend a minimum of three inches inside, and be sloped to facilitate pulling cable. The use of 90 degree elbows at pull boxes is not allowed.

Existing underground conduit to be incorporated into new work shall be cleaned and blown out with compressed air.

(A) PVC Conduit: PVC conduit shall be cut square and trimmed to remove all rough edges. PVC conduit connections shall be of the solvent weld type. Purple primer conforming to the requirements of ASTM F656 shall be applied to the joined surfaces prior to use of cement. The joint cement shall be gray PVC cement conforming to the requirements of ASTM D2564. Where a connection is made to rigid metallic conduit, the coupling used shall be a threaded PVC female adapter. Expansion joints shall not be used to join two segments of PVC conduit in one run. They shall be used only to repair conduits or when embedded in and spanning across discontinuous sections of concrete, such as in bridge joints.

Conduit embedded in concrete structures shall be securely attached to the reinforcing steel at intervals of approximately 12 inches. Expansion fittings shall be installed where conduit crosses expansion joints in the structure. Approved expansion fittings shall allow for a linear thermal expansion of up to 6 inches. Where bonding is not continuous, expansion fittings shall be provided with a bonding jumper of number 6 AWG flexible wire. Where it is not possible to use expansion fittings, sleeves of sufficient size shall be installed to provide a minimum 1/2 inch clearance between the conduit and the inside wall of the sleeve. The sleeve shall be discontinuous at structure expansion joints. Sleeves and conduit embedded in concrete structures shall be cleaned out with a mandrel and blown out with compressed air.

PVC conduit shall be stored and handled in an approved manner to minimize ultraviolet deterioration due to exposure to sunlight.

(B) Fiber Optic Warning Tape: Fiber optic warning tape shall be placed above fiber optic conduit installed in open trenches. The message side shall face up. If electrical conduit shares the same trench, the conduit warning tape for the electrical conduit is not required. Warning tape shall be buried at a depth of 24 inches below finished grade and shall be centered over the conduit.

(C) Detectable Locator Wire: One #14 AWG solid wire with a green outer jacket is required to run continuously without splices in each conduit. Splicing of #14 AWG wire is permitted only to establish an unbroken path through conduit for locating purposes. There shall be at least eight feet of #14 AWG wire doubled back and capped inside all empty conduits.

(D) Pull Tape: Pull tape shall be in populated and unpopulated fiber optic conduit and innerducts to facilitate future cable installations.

(E) Conduit and Innerduct Plugs: All empty fiber optic conduits and innerducts shall be sealed with a cap or plug at each end and have a pull tape attached to it.

During shipping and while on the job site, the open ends of all runs of ducts, conduit, and multiduct conduit shall be sealed with removable caps, plugs, or sealing fittings to prevent the entry of rodents, dirt, sand and other foreign materials. These caps, plugs, or sealing fittings shall be removed only when the Contractor is in the act of joining sections together,

testing, or pulling cable. The open ends shall be immediately recapped or resealed after completion of these activities. This requirement shall be met for all empty or occupied ducts, conduit, and multiduct conduit located anywhere on the Project site, including but not limited to those at equipment enclosures and pull boxes.

If temporary caps or seals are used, the methods and materials shall be approved by the Engineer. Temporary caps and seals shall be replaced with caps, sealing fittings, or plugs conforming to specification requirements prior to acceptance.

(F) Multiduct Conduits: Multiduct conduit shall be installed in accordance with the project specifications and the manufacturer's recommended installation procedures.

The contractor shall visually inspect each section of multiduct prior to installation and verify that the innerducts are straight and do not sag.

Cutting of multiduct shall not be allowed, except to obtain proper lengths at bridge structures, junction boxes, and when needed for connection of bends at specific points along the multiduct runs.

Should connection of multiduct to existing multiduct be required, the joining multiduct shall be of the same manufacturer as that of the stub out. This requirement does not preclude use of a different manufacturer of multiduct in areas where there are no existing multiduct or areas where multiducts meet at a pull box. At the Contractor's option, a pull box may be installed in order to meet the above requirement; however, the cost of furnishing and installing the pull box shall be included in the cost of the multiduct.

Field bending of multiduct shall not be permitted.

Terminations that provide a watertight seal between the innerduct and outerduct shall be installed for all multiduct ends terminated at junction boxes.

(G) Directional Drilling: The pulling tension for installing the HDPE conduit shall not exceed 75% of the manufacturer's tensile strength rating for each size and configuration of conduit to prevent elongation or "necking down" during installation. For conduit installation not specified as directional drilling, the Contractor may choose to utilize directional drilling instead of trenching at no additional cost to the County.

When joining segments of HDPE conduit, the contractor shall use non-corrosive, sit-tight, water-tight couplings. Heat fusion, electrofusion fittings and mechanical connections are permitted provided the HDPE conduit and joining device manufacture's recommendations are observed and the internal diameter of the HDPE conduit is not reduced. Extrusion welding and hot gas welding to join HDPE conduits is not permitted.

Directional drilling shall be performed in compliance with Section 608 HORIZONTAL DIRECTIONAL DRILLING. A bore Plan/Profile shall be required for all bore size classifications.

Upon completion of joining HDPE conduit sections and setting the pull boxes, the contractor shall clean the HDPE conduit with compressed air.

(H) Trenching, Backfilling, and Compaction: Trenching, backfilling, and compaction shall be in accordance with Section 601. Trenches shall not be excavated wider than necessary for the proper placement of conduit and pull boxes. Minimum trench clear width at each side of conduit at spring line is two inches (2”).

If a trench has to be left open overnight, a minimum of six inches of backfill material shall be used as a protective cover to eliminate contraction of the conduit systems. The Contractor shall remove backfill material and have an inspection by the Engineer prior to installation of CLSM.

After conduits, spacers, and tie downs are in place, the Contractor shall notify the Engineer for inspection. The conduit and underground material or equipment shall be approved by the Engineer before placement of Controlled Low Strength Material (CLSM).

The Contractor shall install one-sack CLSM in the bottom 24 inches of fiber optic conduit trenches. CLSM shall be placed in compliance with the requirements of Section 604.

481.3.2 Fiber Optic Pull Boxes: The Contractor shall furnish and install pull boxes of the type specified at the locations shown on the plans. The maximum distance between pull boxes shall not exceed 1200 feet. Chipped or cracked pull boxes, covers, and extensions will not be accepted.

Pull boxes shall be set and adjusted to be flush with the top of the adjacent curb, adjacent sidewalk, or roadway shoulder grade. Where a pull box is not installed adjacent to curb or sidewalk or is installed outside of an unpaved roadway shoulder, it shall be installed one to two inches above the adjacent terrain.

The Contractor shall backfill below pull boxes with an eighteen inch (18”) deep uniformly graded gravel bed. Backfill around the sides of the pull box shall be with excavated material compacted to 95 percent maximum density when located in an area subject to vehicular traffic and compacted to 90 percent maximum density when located back of curb.

The Contractor shall secure all pull box covers with tamper proof bolts before final acceptance of the project. The Contractor shall connect the #8 AWG tracer wire to the inside connection points of the Type A through C pull box covers with a minimum of five feet of slack. If multiple tracer wires are connected to a single cover, the Contractor shall situate the wires so that they are not in contact with each other and do not cross paths.

All pull boxes shall be left in a clean condition, free of dirt and debris upon completion of the work.

481.4 TESTING REQUIREMENTS:

Contractor testing shall comply with requirements of Section 480.3.4 and the following:

481.4.1 Stand-Alone Tests:
The Contractor shall demonstrate by pulling a cleaning mandrel or ball mandrel with a diameter of 90% (80% for HDPE) of the inside diameter of the conduit, through all new conduit runs to ensure that the conduit was not deformed during installation. The conduit may be brushed or swabbed, if deemed necessary, prior to pulling the mandrel through the conduit. No separate measurement or payment shall be made for this activity. If the mandrel passes through the conduit the contractor shall install pull tape in the conduit. If the mandrel encounters a deformity in the conduit, the contractor shall replace the entire segment of conduit between pull boxes with new conduit at no additional cost to the County.

481.5 DOCUMENTATION:

The contractor shall provide as-built drawings for all installed conduit and pull boxes. All vertical and horizontal conduit adjustments made shall be recorded on the as-built drawings.

481.6 MEASUREMENT:

Fiber optic conduit will be measured by the linear foot for each type and size installed. Fiber optic conduit will be measured as the horizontal distance along the alignment of the installed conduit from center of pull box to center of pull box, center of pull box to center of pole foundation, center of pull box to conduit riser in the cabinet foundation, and center of pull box to edge of building as applicable. When the Contractor choses to use directional drilling instead of trenching, measurements will be included for only those items that would have been required for a trenching installation, conduit measurement will be for the type and length of conduit that would have been installed by trenching and measurements will be included for related trenching work such as the replacement of pavements, curb and gutter, sidewalk, driveway and alley entrances, as allowed for by open cut trench construction.

Pull boxes will be measured as a unit for each pull box type. Type A pull box includes the extension in addition to the box and cover.

481.7 PAYMENT:

The accepted quantities of conduit will be paid for at the contract unit price, which shall be full compensation for the item, COMPLETE IN PLACE, including but not limited to couplings, fittings, end closures, potholing and pothole restoration, excavating, placement of CLSM, backfilling, compacting, fiber optic warning tape, detectable locator wire, pull tape, testing, warranty, and documentation. For directional drilled installations the work associated with compliance to horizontal directional drilling requirements are also included in contract unit price.

The accepted quantities for pull boxes will be paid for at the contract unit price, which shall be full compensation for the COMPLETE IN PLACE installation, including excavating, backfilling, and restoration of disturbed landscaping.

Part 400 add the following new Section:

SECTION 482

FIBER OPTIC CABLE AND EQUIPMENT:

482.1 DESCRIPTION:

The work under this section shall consist of furnishing, installing, and testing fiber optic cable and related equipment, including jumper cable, pigtails, connectors, patch panels, splicing, splice units, termination units, and splice closures.

482.2 MATERIAL REQUIREMENTS:

482.2.1 Fiber Optic Cable: Unless otherwise stated, all fiber optic cable shall be 'Bend-Insensitive' single mode fiber optic (SMFO) cable that is of loose tube construction, filled with a dry water-blocking material (Super Absorbent Polymer) and constructed by a certified ISO 9001 or 9002 manufacturer.

Fiber optic cable shall be dielectric and comply with the requirements of US Department of Agriculture Rural Utility Services specification RUS 1755.900, IEC 60793, ITU-T-G-657 Class A, and ITU G652.D except as modified by the Specifications. The fiber optic cable shall comply with GR20-CORE, EIA/TIA, and REA/RUS PE-90. Indoor fiber optic cable shall also comply with the requirements of Article 770 of the NEC. The color code for up to 12 buffer tubes and 144 fiber optic strands shall comply with Table 1 below:

Table 1: Fiber Optic Strand and Buffer Tube Color Table

		Buffer Tube Color											
		Blue	Orange	Green	Brown	Slate	White	Red	Black	Yellow	Violet	Rose	Aqua
Strand Color	Blue	1	13	25	37	49	61	73	85	97	109	121	133
	Orange	2	14	26	38	50	62	74	86	98	110	122	134
	Green	3	15	27	39	51	63	75	87	99	111	123	135
	Brown	4	16	28	40	52	64	76	88	100	112	124	136
	Slate	5	17	29	41	53	65	77	89	101	113	125	137
	White	6	18	30	42	54	66	78	90	102	114	126	138
	Red	7	19	31	43	55	67	79	91	103	115	127	139
	Black	8	20	32	44	56	68	80	92	104	116	128	140
	Yellow	9	21	33	45	57	69	81	93	105	117	129	141
	Violet	10	22	34	46	58	70	82	94	106	118	130	142
	Rose	11	23	35	47	59	71	83	95	107	119	131	143
	Aqua	12	24	36	48	60	72	84	96	108	120	132	144

(A) Fiber Optic Cable Performance and Construction: Fiber optic cable shall comply with the following requirements:

Cladding diameter:	125 ± 0.7 μm
Core-to-cladding offset:	≤ 0.8 μm
Cladding non-circularity:	≤ 0.5%
Maximum attenuation:	≤0.35 dB/km at 1310 nm; ≤0.25 dB/km at 1550 nm
Microbend attenuation (1 turn, 32 mm diameter):	≤ 0.05 dB at 1550 nm
Microbend attenuation (480 turns, 75 mm diameter):	≤ 0.05 dB at 1310 nm
Allowable Bending Radius for Fiber	≥ 15 mm
Attenuation uniformity:	No point discontinuity greater than 0.05 dB at either 1310 nm or 1550 nm.
Mode-field diameter (matched cladding):	8.6 ± 0.4 μm at 1310 nm; 10.5 ± 1.0 μm at 1550 nm
Maximum chromatic dispersion:	≤ 3.2 ps/(nm x km) from 1285 nm to 1330 nm and < 18 ps/(nm x km) at 1550 nm
Fiber polarization mode dispersion:	≤ 0.2 ps/(km)1/2
Fiber coating:	Dual layered, UV cured acrylate applied by the fiber manufacturer
Coating diameter:	245 μm ± 5 μm
Minimum storage temperature range for Cable:	-40 to +75 degree C (-40 to 167 degree F)
Minimum operating temperature range for Cable:	-20 to +70 degree C (-4F to 158 degree F)
Rated life:	Certify a 25 year life expectancy when installed to manufacturer's specifications
Ensure the change in attenuation for single-mode from -20 to +70 degree C (-4 to 158 degree F) does not exceed 0.2 dB/km at 1550 nm, with 80% of the measured values no greater than 0.1 dB/km at 1550 nm.	

Buffer Tubes: Each buffer tube shall be filled with a non-hygroscopic, non-nutritive to fungus, electrically non-conductive, homogenous gel that is free from dirt and foreign matter. The gel shall allow free movement of the fibers, without loss of performance, during installation and normal operation including expansion and contraction of the buffer tubes. The gel shall be readily removable with conventional nontoxic solvents.

Buffer tubes shall be stranded around a central member using the reverse oscillation or "S-Z", stranding process. Filler rods shall be used in the trunkline cable to lend symmetry to the cable section when the number of buffer tubes required is not sufficient to circumscribe the central member.

The nominal outer diameter of the tubes shall be 2.7 mm for tubes with 12 fibers or less.

Central Strength Member: The fiber optic cable shall have a central strength member designed to prevent buckling of the cable. The central member shall be covered with a super absorbent polymer in order to prevent water migration through the center of the cable core should the core become exposed.

Cable Core: The fiber optic cable shall use a dry water-blocking material to block the migration of moisture in the cable interstices.

Two polyester yarn binders shall be applied counter-helically in order to secure the buffer tubes to the central member. The binders shall not crush or deform the buffer tubes. The binders shall be non-hygroscopic, non-wicking, and dielectric with low shrinkage.

For single layer cables, the yarn binders shall contain super absorbent polymers to prevent water migration.

Tensile Strength Members: The fiber optic cable shall have tensile strength members designed to minimize cable elongation due to installation forces and temperature variation.

Underground fiber optic cable shall withstand a 600 lb tensile load applied per EIA-455-33 where the change in attenuation does not exceed 0.2 dB during loading and 0.1 dB after loading. Cable shall be rated for an installed tensile service load of 200 lbs or more.

Cable Jacket: The fiber optic cable jacket shall be constructed of medium density polyethylene (MDPE) that has been applied directly over the tensile strength members and water-blocking material. The jacket shall have at least one ripcord designed for easy sheath removal. Printed on the jacket shall be the cable code to identify the number of fibers, manufacturer name, manufacturer part number, year of manufacturer, and the sequential length markings.

Cable Markings: Cable markings shall include cable length (in feet) and the year of manufacture. Cable markings shall identify the cable as trunkline (cable between communication hubs) or branch (spliced to trunkline cables). All cable markings shall be labeled with indelible markings.

Environmental: Cable shall withstand the following conditions without damage or decrease in function:

1. Cable operating temperature per EIA/TIA-455-03;
2. Total immersion in water with natural mineral and salt contents;
3. Salt spray or salt water immersion for extended periods; and
4. Wasp and hornet spray.

(B) Cable Length and Shipping: The length of each fiber optic cable shall be based on field measurements. Include in the measurement the required amount of slack cable at pull boxes, field cabinets, hubs, and equipment racks.

Stencil, letter, or provide the following information on a weatherproof tag firmly attached to the reel:

1. Factory order number;
2. Job number;
3. Ship date;
4. Manufacturer's cable code;
5. Type of cable (single mode, outdoor, indoor);
6. Beginning and ending length markings; and
7. Measured length and attenuation.

(C) Trunkline Fiber Optic Cable: Trunkline fiber optic cable shall have a minimum of 96 fibers, with 12 fibers per buffer tube. Refer to the plans for the total number of strands per cable used.

(D) Branch Fiber Optic Cable: Branch fiber optic cable shall have 12 fibers, with 12 fibers per buffer tube. Both ends of the branch fiber optic cable shall be bare for splicing.

(E) Fiber Optic Jumper Cable: Jumper cables shall meet the following requirements:

1. 250 μm buffering of each fiber;
2. 900 μm buffering of each fiber applied after the initial 250 μm buffering;
3. Maximum factory measured insertion loss of 0.5 dB per EIA/TIA 455-171;
4. Less than 0.2 dB loss when subjected to EIA/TIA-455-1B, 300 cycles, 0.5 kg;
5. Aramid yarn strength member;
6. Rugged 0.12 inch (approximate) PVC sheathing;
7. Minimum bend radius of 12 inch following installation, 25 inch during installation;
8. Minimum tensile strength of 480 lbs;
9. UPC LC Connectors that are factory terminated; and
10. Lanyard dust caps for fiber optic connectors.

(F) Fiber Optic Pigtail: Fiber optic pigtails shall meet the requirements for jumper cable, except as amended by this section. Pigtails that are totally contained within a fiber optic splice or termination unit need not have a 0.12 inch PVC jacket. All fiber optic pigtails shall be UPC type LC. The other end shall be left bare for splicing to fiber.

(G) Fiber Optic Connectors: Fiber optic connectors shall meet the following requirements:

1. Pre-installed by the cable manufacturer;
2. Type shall be machine polished UPC LC;
3. Designed for terminating single mode fiber with 125 μm cladding;

4. Return loss factory-measured – 55 dB (UPC) or less from -40 to +70 degree C (-40 to 158 degree F);
5. Factory-measured attenuation less than 0.5 dB;
6. Connector attenuation shall not change more than 0.2 dB following 4800 re-matings; and
7. Lanyard dust caps for fiber optic connectors.

Connectorized cable shall have strain relief boots that can withstand an axial pull of 25 pounds force with no physical damage to the connector or performance of the fiber.

All connector types shall use an UPC machine to polish connector ends. Hand polished connectors shall not be used.

482.2.2 Fiber Optic Splice and Distribution Equipment

(A) Fiber Optic Patch Panels: Fiber optic patch panels shall have protective covers for all unused couplers and shall have a minimum of 12 ports per patch panel.

(B) Splice Trays: Splice trays shall be designed specifically for housing single-mode fusion splices. Splice trays shall be easy to install and remove, and have provisions for a minimum entry of four buffer tubes.

(C) Fiber Optic Splice and Termination Units: Fiber optic splice and fiber optic termination units shall be properly sized for the required number of splices and terminations subject to the minimum requirements stated for each configuration. Fiber optic splice and termination units shall meet the following requirements:

1. Have provisions for minimum of 6 fiber optic cable entries;
2. Rack mounted;
3. Have front and rear doors or removable panels;
4. Have a top, bottom, and 4 sides that fully enclose the interior and protect its contents from physical damage;
5. Manufactured using 16 gauge aluminum or approved equivalent and corrosion resistant;
6. Provisions for neatly routing cables, buffer tubes, and fan-out tubing;
7. Have internal feed-through provisions that allow cables to be internally routed between two units installed adjacent to each other;
8. Have provisions for externally securing the fiber optic cable, sheath, and central strength member;
9. Suited for Patch and Splice Modules;
10. Include removable front and rear fiber routing guides;
11. Textured black powered coat finish;
12. 4RU Panels conforming to 15.5 x 17 x 7 (inch);
13. Aluminum construction per ASTM B209;
14. Unloaded weight of 9 pounds (4RU), 5lbs (2RU), and 4 pounds (1RU); and
15. Use LGX interconnect platform.

Fiber Optic Splice Units: Fiber optic splice units shall consist of a single housing with provisions for installation of multiple splice trays as required. The splice unit shall have provisions for future installation of 2 splice trays of minimum 12 splice capacity each, in addition to the required amount.

The splice unit shall have a pull-out shelf that allows easy access to the splice tray, buffer tube and fiber storage area that permits fusion splicing to be conducted at a minimum distance of 16 feet from the housing. Units with hinged shelves are not acceptable. The following permanent marking shall be provided on the door or front access panel: "Fiber Optic Cable Splice Area Inside".

Fiber optic splice units shall consist of a single modular housing that has LGX interconnect adaptability. Each Patch and Splice module shall use ITU-TG-652.D fiber that can be configured for up to 24 fiber splices to LC connectors and corresponding bulkheads. These patch and splice modules shall be self-contained with the bulkheads providing one connection interface and the internal splice chips providing the other connection interface.

Mounting provisions for the patch and splice modules shall include individual rack or wall-mountable brackets that allow for setup in limited-space applications.

Fiber Optic Termination Units: Fiber optic termination units shall consist of a single housing with provisions for installation of one or more patch panels as required. Patch panels shall face to the front of the rack.

Fiber optic termination units shall have cable management brackets or rings, integral to the unit, that secure and support cables between patch panels or splice trays to the vertical rack members while maintaining a minimum 1.5 inch cable radius. Jumper cable troughs may be provided in lieu of this requirement.

The following permanent marking shall be provided on the front of the unit: "Fiber Optic Cable Termination Area Inside".

Integrated Fiber Optic Splice and Termination Units: Integrated fiber optic splice and termination units shall consist of a single housing with provisions for patch panels and splice trays. Integrated fiber optic splice and termination units shall comply with requirements for Fiber Optic Splice Units and with requirements for Fiber Optic Termination Units.

The following permanent marking shall be provided on the door or front access panel: "Fiber Optic Cable Termination and Splice Area Inside".

The fiber optic termination units used in the traffic signal cabinets shall have a black housing fabricated of steel that can accommodate a separate fiber optic cable panel. The fiber optic cable panel shall accommodate 12 fiber strands, with factory install LC connectors on the front, and approximately 3 feet of fiber optic cable pigtail attached to

each connector on the back side. The connector inserts shall be ceramic. The unit shall accommodate a rack mount, with nominal dimensions of 7 inches x 5.5 inches x 2 inches. All 12 strands of the branch cable shall be fusion spliced to a pigtail.

(D) Jumper Cable Troughs: Jumper cable troughs shall be designed to secure, support, store, and horizontally route jumper cables and other fiber optic cables from vertical frame members on one side of the rack, to vertical frame members on the other side of the rack. Jumper cable troughs shall be designed to maintain the manufacturers minimum bend radius for jumper cable's bend radius when transitioning from the trough to vertical frame member. The capacity of each cable trough shall exceed the number of jumpers it houses.

(E) Underground Splice Closures: Underground splice closures shall be cylindrical, butt-end style, corrosion resistant, water-tight, and meet the requirements of GR-771-CORE. Underground splice closures shall seal, bind, anchor, and provide efficient routing, storage, organization, and protection for fiber optic cable and splices. Internal configuration shall have end cap with a minimum of two express ports for entry and exit of uncut trunkline cable and a minimum of three additional ports for branch cables.

The splice enclosure shall be designed to seal terminations using gel-sealing technology. The use of heat-shrink is not authorized. The gel seal cable terminations shall automatically adjust to the cable size and shape, and require no special tools, tapes, or mastics to install. The splice enclosure shall support a minimum of 96 splices. Refer to the plans for the splices required at each splice closure.

Splice closures shall seal both the cable jackets and core tube without the use of water-blocking materials. The gel seals shall be re-usable and cabling shall be easy to remove. The splice closure shall be opened and completely resealed without loss of performance. Splice closures shall be at least 12 inches shorter in length than the longest inside dimension of the pull box.

482.3 CONSTRUCTION:

482.3.1 Fiber Optic Cable: Prior to installing fiber optic cable the Contractor shall provide a fiber pulling plan showing reel setup, assist winch, "figure eight", and assist wheel locations. The fiber pull plan shall identify the estimated pulling tension, route length, number of turns, pull direction, and splice enclosure and access locations. The fiber pulling plan shall include cable pulling lubricants, pulling grips, breakaway swivel, dynamometer, and any other hardware that will be used to assist in maintaining cable's minimum bend radius. The Contractor shall submit the fiber pulling plan to the Engineer for review and approval at least two weeks prior to install. The Contractor shall not install fiber optic cable without prior approval of the fiber pulling plan.

The ITS inspector shall be present at all times during the installation of fiber optic cable.

The pull tape shall be threaded through the pulling eye and sewn back onto itself to reduce the possibility of breakage. A swivel shall be used between the tape and cable to prevent cable twisting. Tension-sensitive, breakable links shall be used to protect the fiber optic cable from over-tension for pulls over 700 feet.

The Contractor shall install fiber optic cable continuous and without splices between allowable splice points as identified by the Plans and Specifications. The Contractor shall only splice fibers in splice closures and at fiber optic splice units that are housed at hub locations and/or the Traffic Management Center (TMC). The Contractor shall perform all final length measurements and order cable accordingly.

The Contractor shall:

- Carefully handle fiber optic cable;
- Not pull cable along the ground;
- Not pull cable over edges or corners, over or around obstructions or through unnecessary curves or bends;
- Not exceed fiber optic cable bend radius at any time;
- Not exceed the maximum pulling tensions at any time; and
- Use manufacturer approved pulling grips, cable guides, feeders, shoes and bushings to prevent damage to the cable during installation.

The Contractor shall place cable in a “figure-eight” configuration, when removing cable from the reel prior to installation, to prevent kinking or twisting. The Contractor shall take care to relieve pressure on the cable at crossovers by placement of cardboard shims (or approved equivalent method) or by creating additional “figure-eights”. The Contractor shall store cables as per the approved fiber pulling plan. Fiber stored using cable reels, the figure eight pattern or other approved means shall use radii larger than the minimum bend radius of the fiber. If the bending radius is violated then the Contractor will replace the section of cable from the last splice point.

The Contractor shall furnish the Engineer with the cable manufacturer's recommended procedures, maximum pulling tension, a list of the cable manufacturer's approved pulling lubricants, and the lubricant manufacturer’s procedures for use. The Contractor shall adhere to the manufacturer's installation procedures when installing fiber optic cable. The pulling tension shall be monitored using a strip chart recorder when mechanical pulling techniques are used. If at any time during the pull the cable tension is at 85% of the maximum allowed, the Contractor shall stop the pull and troubleshoot the problem to determine if there is an obstruction, low lubricant, or other difficulties that may cause a high-tension problem. After the tension problem has been thought to have been resolved, continue the pull, and closely monitor the cable tension. If the problem continues, the Contractor shall notify the Engineer of the problem and cease installation until the problem can be identified.

The Contractor shall use high-performance fiber optic cable lubricant to lubricate the conduit for long cable duct pulls beyond 700 feet or pulls with numerous turns totaling over 180 degrees. The lubricant shall be suitable for outdoor temperatures, flame

retardant, unable to affect the properties of the cable jacket, and have a low coefficient of 0.25 when used on PE jacketed or other types of cables. The lubricant is to be present at all points of the fiber optic conduit, cable feed locations, intermediate pull locations, bend locations and approved by UL or CSA. The lubricant shall be applied with a lubricant collar and pump. The Contractor shall use lubricants in quantities and in accordance with the procedures recommended by the lubricant manufacturer.

The Contractor shall furnish attachment hardware, installation guides, and other necessary equipment, not specifically listed herein, as necessary to install the fiber optic cable.

(A) Underground Fiber Optic Cable: At each splice point, coil 150 feet of slack fiber optic cable per cable entry. Each Type C, D or E pull box without a splice closure shall have a minimum of 300 feet of fiber optic cable slack installed. The Contractor shall install 25 feet of slack per cable at each intermediate Type A pull box and 150 feet in each Type B pull box. At each field cabinet, provide a minimum of 16 feet of slack for each fiber optic cable. All cable shall be coiled and neatly stowed in the respective pull box or cabinet.

Underground fiber optic cable shall be installed in fiber optic conduit, unless shown otherwise in the plans.

(B) Indoor Fiber Optic Cable: Indoor fiber optic cable installations shall follow the requirements of local building codes and NEC Article 770.

Splices for indoor fiber cable shall be housed in a rack-mounted fiber optic splice unit or integrated fiber optic termination unit. Coil 16 feet of slack fiber optic cable and stow it in the rack.

(C) Fiber Optic Jumper Cable: Install jumper cables only in field cabinets and indoor locations. Provide permanent labeling on duplex jumper cables that provide a visual distinction between the two fibers. Provide strain relief for jumper cables at both ends and elsewhere as needed. Adhere to manufacturer recommended installation and minimum bend radius requirements.

(D) Fiber Optic Pigtails: Install fiber optic pigtails only in enclosed fiber optic splice and termination units located in field cabinets and indoor locations. When splicing pigtails to individual fibers, match the color of single fiber pigtails with the color of the fiber. Alternatively, single fiber pigtails may be routed through colored fan-out tubing that matches the color of the fiber.

482.3.2 Splicing and Terminations: The Contractor shall splice fibers only at locations that are identified in the Plans. Splice tables in the Plans shall not be revised without approval from the Engineer. For outdoor installations, all splices shall be protected and stored in underground splice closures.

For indoor installations, all splices shall be protected and stored in fiber optic splice units or integrated fiber optic splice and termination units. The fiber optic cable shall enter the rear of the unit. The fiber optic cable sheath and central member shall be secured inside the unit prior to buffer tube fan-out. All entry holes not used shall be plugged. Buffer tubes with fiber designated for splicing shall be routed into and secured in a splice tray. Remaining buffer tubes shall be secured within the splice unit and not accessed.

(A) Splicing Methods: All splices shall be accomplished by means of the fusion splice technique. Each splice shall not add more than 0.1 dB attenuation when splicing new fiber to new fiber, and 0.3 dB attenuation when splicing new fiber to existing fiber. Splices found to exceed the maximum allowed dB attenuation when tested with an optical time-domain reflectometer (OTDR) shall be re-spliced, at no additional cost, until this requirement is met.

Each splice shall be packaged in a protective sleeve and secured in the splice tray. The sleeve shall be approved for use by the fiber optic cable manufacturer and installed in such a manner as to protect the fiber from scoring, dirt accumulation, moisture intrusion, and microbending.

Splicing shall be performed in a clean indoor environment that is free of dust, dirt or any encumbrances that will hinder the splicing of fiber optic cable.

All fibers in a buffer tube shall be spliced within the same splice tray. When splicing to fiber optic pigtails, use spiral wrap (or similar approved method) to group and protect pigtails routed from each splice tray to the corresponding patch panel.

Fiber optic cable splices will fall into one of the following categories:

Mid-cable splices: Perform mid-cable splices when splices are not required for all fibers of a cable. Only fibers within a buffer tube that are designated for splicing shall be accessed, spliced, and secured neatly within the splice tray. The remaining fibers in the buffer tube that are not designated for splicing shall be secured neatly within the splice tray and not cut. Removal of the buffer tube to access the fibers shall be accomplished using equipment specifically designed for buffer tube removal without damaging the individual coated fibers.

Full-cable splice: Perform full-cable splices when the distance exceeds the maximum length of fiber optic cable available on a reel. All fibers, including spares, shall be spliced together to provide a continuous optical path. All fibers shall be secured neatly within the splice trays.

(B) Termination Methods: LC connectors shall be used for terminating fiber optic cables.

Measured attenuation at each termination (inclusive of 2 connectors and coupler) shall not exceed 0.5 dB.

Fiber terminations shall be neatly and permanently labeled on the connector module to designate 'transmit' or 'receive' (as appropriate) and the fiber optic strand number or other designation as determined by the Engineer. Spare fibers shall be terminated when called for by the Plans and labeled as determined by the Engineer.

Protective covers shall be used on all optical connectors and terminations at all times until terminated.

Termination at Hubs and TMC: Termination of fiber optic cable at hubs and the TMC shall be accomplished by fusion splicing fiber to factory prepared, fiber optic pigtails with LC connectors terminated at patch panels. Jumper cables shall have LC connectors. Field termination of fibers to connectors shall not be permitted.

482.3.3 Fiber Optic Distribution Equipment: The Contractor shall install a sufficient number of patch panels to terminate all fibers. Blank patch panel covers shall be of the same manufacturer as the patch panel and shall be installed for all unused patch panel spaces on fiber optic termination units.

Fiber optic patch panels shall have couplers to allow applications to be easily installed and removed from the termination housing.

482.3.4 Fiber Optic Equipment Labeling: Labeling of fiber optic equipment including trunkline cables, branch cables, branch cables, connectors and ports shall comply with the *Cable and Active Electronics Labeling and Management* requirements of Section 480.

482.4 TESTING REQUIREMENTS:

Fiber optic cable and distribution equipment shall meet the following certification, factory and stand-alone test requirements. General test requirements are covered in Section 480.3.4. See figure 482.4-1 for a Sample Fiber Test Report.

The ITS inspector shall be present at all times during the testing of fiber optic cable.

482.4.1 Design Approval Tests (DAT): The Contractor shall submit a certificate of compliance or DAT test results and certification for fiber optic cable. Submittal of RUS certification will satisfy this requirement for the tests that are required by RUS 1755.900.

482.4.2 Factory Acceptance Tests (FAT): All fiber optic cable, pigtails, jumper cables, and patch panels shall be tested in the factory to demonstrate compliance with specification requirements. The Contractor shall submit a copy of the results of factory tests to the Engineer.

482.4.3 Stand-Alone Tests:

(A) Pre-Installation Testing: The Contractor shall visually inspect all cable and equipment upon delivery and again prior to installation. The Contractor shall test any equipment that is

found to have visual damage. The Contractor shall perform pre-installation on-reel testing of all fiber optic cable strands prior to installation. Using an OTDR, the Contractor shall test to ensure fiber optic cable strands are free of breaks and micro bends.

(B) Post-Installation Testing: Prior to testing, the Contractor shall furnish the Engineer with a fiber optic testing plan and procedures. Testing of spare fiber is required.

The Contractor shall test for and identify unacceptable losses. Failed splices may be remade and re-tested for compliance. The Contractor shall replace any cable in its entirety that is found not compliant to the Specifications. Post-installation tests shall use the procedures of TIA/EIA-526-7A and all standards and procedures invoked therein, subject to the following clarifications:

Power Meter Tests: The contractor shall conduct unidirectional power meter tests for each fiber to measure installed fiber cable attenuation, demonstrate connectivity, and correct splicing. The contractor shall perform Power Meter Tests on each fiber strand in accordance with Method A.3 of TIA/EIA-526-7 – "Measurement of Optical Power Loss of Installed Single-mode Fiber Cable Plant" and submit test results for each fiber to the Engineer as required by TIA/EIA-526-7. Test results for each link shall be submitted to the Engineer. Power meter tests shall be conducted after all splices have been made and all connectors, jumper cables, and pigtails are in place. Each link shall be tested separately from each field cabinet to the respective trunk cable termination panel in the Hub(s) and from field cabinet to field cabinet for fiber links that do not go directly to a hub. The use of fiber optic jumpers to couple the connectors together in equipment cabinets to create a continuous end to end link is not permitted.

OTDR Tests: The contractor shall conduct bi-directional tests using an OTDR in accordance with TIA/EIA-455-8 (FOTP8) for each fiber strand (including non-spliced fiber strands) from field cabinet to hub location, between hub locations, between field cabinet locations, inclusive of all branch cables, pigtails, and patch panels to demonstrate that attenuation for each fiber strand, termination, and splice, individually and as a whole, comply with allowable losses in accordance with the fiber assignment tables. Test fibers at 1310 nm and 1550 nm.

The OTDR shall be set to operate in auto event mode with the event threshold set at 0.1dB or lower. The Contractor shall submit printed and electronic OTDR traces for approval. Any electronic traces submitted that were shot without the auto events feature shall be re-tested by the Contractor at no additional cost. The Contractor shall clearly annotate each event (connector, pigtail, splice, etc.), event location, and identify the measured loss.

Following completion of all testing, and approval by the Engineer, the Contractor shall compile and submit two organized test notebooks that include all required test results, summary tables, OTDR traces, and electronically saved test data. Test notebooks shall at a minimum, include the following:

1. Identification of each fiber by cable (as it is identified in the field), buffer tube, color, and string number as appropriate;

2. A summary sheet with each submittal that clearly illustrates length and measured loss versus budgeted loss for each fiber or connected fiber string as appropriate; and
3. Calculations and notations for each fiber and wavelength that include total loss, measured dB/km loss, the number of connectors/terminations, pigtails, and jumper cables and any anomalies over 0.1 dB.

Figure 482.4-1 Sample Fiber Test Report

SAMPLE FIBER TEST REPORT

PROJECT: _____

FIBER TEST SUMMARY REPORT

Fiber ID	From	To	Wavelength	Length	Number of Splices	Number of Connectors	Loss Budget (dB)	Loss A > B (dB)	Loss B > A (dB)	Loss Average (dB)	Pass/Fail
			1310 nm								
			1550 nm								
			1310 nm								
			1550 nm								
			1310 nm								
			1550 nm								
			1310 nm								
			1550 nm								
			1310 nm								
			1550 nm								
			1310 nm								
			1550 nm								
			1310 nm								
			1550 nm								
			1310 nm								
			1550 nm								
			1310 nm								
			1550 nm								
			1310 nm								
			1550 nm								
			1310 nm								
			1550 nm								
			1310 nm								
			1550 nm								
			1310 nm								
			1550 nm								
			1310 nm								
			1550 nm								
			1310 nm								
			1550 nm								
			1310 nm								
			1550 nm								
			1310 nm								
			1550 nm								
			1310 nm								
			1550 nm								
			1310 nm								
			1550 nm								
			1310 nm								
			1550 nm								
			1310 nm								
			1550 nm								
			1310 nm								
			1550 nm								
			1310 nm								
			1550 nm								

482.5 WARRANTY REQUIREMENTS:

The following requirements apply in addition to the warranty requirements identified in Section 480.4:

The Contractor shall repair or replace defective fiber optic cable and equipment for a period of one year following final acceptance of the system.

482.6 DOCUMENTATION:

The Contractor shall provide post installation as-built drawings that document fiber distances between manhole/handholes, splice locations, amount and location of coiled slack, and type, size, and number of installed fiber optic cables.

482.8 MEASUREMENT:

Fiber optic cable will be measured by the linear foot for each type installed. The length of cable required to be coiled for cable slack will be measured and included in the total measured amount.

Fiber optic splice units, termination units, integrated splice and termination units, underground splice closures, and patch panels will be measured as a unit for each type installed. The length of the branch connection cable attached to the patch panel will be measured as Fiber Optic Cable (Single Mode 12).

Fiber optic jumper cables, pigtails, connectors, terminations, splice trays, and splices shall not be individually measured, they are considered included as part of other pay items.

482.9 PAYMENT:

The accepted quantities of items, measured as above, will be paid for at the contract unit price, COMPLETE IN PLACE. The cost of testing, warranty, and documentation are included in the unit price of each item.

Part 400 add the following new Section:

SECTION 483

CLOSED CIRCUIT TELEVISION

483.1 DESCRIPTION:

The work under this section shall consist of furnishing, installing, and testing CCTV equipment including software, cables, lightning and surge protection equipment and various accessories as needed.

483.2 MATERIALS:

CCTV camera assemblies shall include the camera, lens, pan/tilt/zoom control receiver, sun shield, and the environmental enclosure together with mounting hardware, CCTV camera panels, cables, lightning and surge protection. The CCTV camera assemblies shall be compatible with existing MCDOT equipment and subject to MCDOT approval.

The CCTV control and power equipment shall be located in the traffic signal controller cabinet of the subject intersection. Where a separate cabinet is required, it shall meet the requirements of Section 475 *Electrical Power Service and Controller Cabinet Installation*.

483.2.1 Local Camera Control Point: The Contractor shall provide a local camera control point in the cabinet housing the camera control equipment.

483.2.1(A) Analog Cameras: For Analog cameras, the control point shall feature:

Video Interface:	NTSC Standard with BNC Connector for Test Monitor
Data Interface:	RS-422/RS-485 Data rate shall be user selectable with a default of 9,600 bps.
Data Cable:	Camera Cable Connector to Existing Video Optical Transceiver Connector (Connector Types on Video Optical Transceivers vary and may include terminal blocks, DB-9 and/or DB-25).

483.2.1(B) IP Addressable HD Digital Cameras: IP Addressable HD Digital cameras shall have H 264 compression and the control point shall feature:

Interface:	IP Addressable Ethernet
Data Cable:	Camera Cable Connector – RJ45.

483.2.2 Mounting Hardware: Provide all mounting equipment and adapter plates needed to securely mount the pan/tilt unit or dome assembly to the CCTV pole or other structure as required.

483.2.3 Cables: The Contractor shall select suitable cables and camera control systems by taking into consideration the height of installation and distance from the cabinet to

ensure that the CCTV system will function properly in an outdoor environment. Power and control cables shall comply with IMSA 20-1 specification requirements.

Coaxial cable shall be RG-59/U and shall meet or exceed the following characteristics:

- Solid copper conductor
- Braided copper shield with 95% coverage
- Attenuation not to exceed 0.65dB/100 feet from 1MHz through 5MHz
- Outdoor rated

The coaxial cable may be replaced by an optical fiber.

A composite cable shall be used for power, camera control, and video between the camera and the cabinet unless otherwise approved by the Engineer.

483.2.4 Surge Suppression: Surge suppression shall comply with requirements of Section 480.2.4. The Contractor shall provide surge suppressors for each power circuit associated with the CCTV system in a weatherproof cabinet at the base of the CCTV pole. The Contractor shall provide detailed diagrams and instructions for the installation of all surge suppressors that are external to the equipment.

483.2.5 CCTV Camera Panel: The Contractor shall provide a CCTV camera panel. All CCTV equipment will be located on the panel. The panel size shall be no less than 11 inches by 11 inches. The panel shall include the following:

1. Single gang outlet box with RJ45 test jack;
2. Video Encoder, refer to Section 486 for Video Encoder requirements;
3. Coaxial Cable Surge Protector;
4. Low Voltage Camera Control Cable Surge Protector;
5. Electrical Bus Bar (ground);
6. Power Cable Surge Protector;
7. 110 Volt Duplex Receptacle Outlet;
8. 6 Outlet Surge Protection;
9. Camera Power; and
10. Video Encoder Power Supply.

483.2.6 Lightning Protection: The Contractor shall provide an air terminal (lightning rod) fabricated of galvanized steel or copper-clad steel for installation on the pole to which the CCTV camera is mounted. The Contractor shall provide 1/2-inch woven copper ground wire for connecting the air terminal to the pole ground rod.

483.3 CONSTRUCTION:

The Contractor shall set electrical or mechanical pan and tilt limits at positions determined

by the Engineer. The Contractor shall program camera location identification text labels obtained from the Engineer.

The cables in the cabinet from device to device shall not be longer than required. The cables shall be routed for permanent installation and any excess will be cut to remove the slack. The only exception is the 6 feet of slack inside the cabinet where the cable enters the cabinet.

The Contractor shall provide post-installation photographs in electronic format of the mounted CCTV camera, the slack for each pull box, the CCTV Camera Panel, and the cabinet as part of the inspection. Each photo shall be clearly labeled with the photo location and equipment shown. Any discrepancies with the installation shall be resolved by the Contractor.

Where a Type G cabinet is required or specified in the construction documents, all equipment shall be mounted inside the cabinet either by the use of a panel or DIN rails.

483.3.1 CCTV Camera Installation Plan: The Contractor shall provide to the Engineer a CCTV Camera Installation Plan. The installation plan shall consist of the camera location, estimated cable lengths, cable route, cable slack, wiring diagram, and camera configuration. The Engineer will review the installation plan within 14 calendar days and either approve it or require revisions.

483.3.2 Mounting: All dome cameras shall be mounted to the pole using a pendant arm and strapped to the pole using 3/4-inch type 201 stainless steel bands or approved equal. Bands utilizing a worm gear to tighten and hold the band shall not be used. Mounting shall comply with MCDOT Standard details or approved alternative drawings.

483.3.3 Cables: The Contractor shall install cabling from the CCTV Camera System to the cabinet that will house the camera control equipment.

Each pull box, cabinet, or conduit entry point shall have a minimum of 6 feet of cable slack.

Strain relief shall be used to hold the weight of the electrical, video, and data cables when they hang in a vertical, sloping or horizontal position. The Contractor shall submit a proposed method of strain relief for approval to the Engineer.

An 8 foot service loop is required at the top of the CCTV camera pole or signal pole. A cable grip shall be placed at the beginning and at the end of the service loops to support the weight of the cable and the loop inside the pole.

Drilling of a 1-inch hole into the signal pole to accommodate the cable is authorized for dome cameras.

A grommet shall be used at each hole to prevent the cable from being frayed or damaged.

There shall be no visible cables hanging from the pole or the CCTV Camera enclosure and mounting arm.

483.3.4 CCTV Camera Panel: The CCTV camera panel shall be mounted in the lower right hand corner of the cabinet. The mounting of the items on the panel shall conform to MCDOT Standard Details.

The panel shall be mounted using the existing vertical “C” channels in the cabinet.

The cable shall be tested on the reel and wired directly to the CCTV camera panel.

483.3.5 Lightning Protection: The Contractor shall mount the air terminal to the top of the pole such that it does not hinder the ability of the camera to view areas deemed critical by the Engineer. The air terminal shall be directly grounded by connecting it to the pole ground rod using the 1/2-inch woven copper ground wire.

483.4 DOCUMENTATION:

The Contractor shall provide maintenance manuals for CCTV equipment per the requirements of Section 480.5. Include the following diagrams (as appropriate):

1. Video signal path diagram;
2. Control signal path diagram; and
3. System connection diagram.

483.5 MEASUREMENT:

Each type of CCTV camera assembly will be measured as a unit. Surge suppression, inductive suppressors, lightning protection and the CCTV camera panel are included as parts of the CCTV camera assembly.

CCTV cabinets will be measured as a unit for each type installed.

483.6 PAYMENT:

The accepted quantities of CCTV camera assemblies will be paid for at the contract unit price, COMPLETE IN PLACE including but not limited to testing, warranty, documentation, and training.

The accepted quantities of CCTV cabinet will be paid for at the contract unit price, COMPLETE IN PLACE.

Part 400 add the following new Section:

SECTION 484

DYNAMIC MESSAGE SIGNS

484.1 DESCRIPTION:

The Contractor shall furnish all the necessary labor, materials, and equipment required to install and test all components of structure-mounted dynamic message signs (DMS). This work includes connecting and integrating the DMS into a controller cabinet. It does not include the structure on which the DMS is to be mounted.

484.2 MATERIALS:

The DMS assembly includes the sign case, display matrices, sign controller unit (SCU), software, and accessories. The accessories include but are not limited to mounting hardware; conduit; cabling for power, communications, and grounding; strain relief for cabling; and lightning and surge protection.

The mounting hardware shall withstand the weight of the sign and a wind load of 80 miles per hour with a 30% gust factor.

The DMS controller unit, software, and accessories shall be compatible with existing MCDOT equipment.

484.2.1 Surge Protection: Surge protection shall be in accordance with requirements of Section 480 *Intelligent Transportation System General Requirements*.

484.2.2 DMS Controller Cabinet: The controller cabinet for the DMS assembly shall be as specified in the plans and special provisions and shall meet the requirements of Section 475.2.2 *Controller Cabinet Assembly*.

484.3 CONSTRUCTION:

484.3.1 Conduit: The Contractor shall install a silicon sealant bead around all conduit entries into the sign case to ensure a watertight environment for all cables and conductors.

484.3.2 Wiring: The contractor shall install all cables required to power and operate the DMS signs. The contractor shall install all wiring between the DMS controller cabinet and the DMS Assembly in compliance with the recommendations of the DMS sign manufacturer.

484.3.3 Strain Relief: Strain relief shall be provided for conductors within the DMS support structure. All strain relief (such as wire mesh grip), connectors, and splices within the support structure shall be located within 6 inches of a hand hole.

484.3.4 Grounding: The Contractor shall ground the DMS assembly and contents to the support structure in compliance with the DMS sign manufacturer's recommendations.

484.3.5 Mounting: The Contractor shall provide the DMS sign mounting hardware and attach the DMS sign case to the DMS sign structure as detailed on the construction plans. Shop drawings of alternative mounting schemes may be submitted for review and approval if sealed by an Arizona professional engineer and accompanied by sealed calculations. All alternative mounting proposals shall be designed to withstand the weight of the sign and a wind load of 80 miles per hour with a 30% gust factor.

The Contractor shall mount the controller cabinet to the support structure as detailed by the project plans and special provisions.

484.3.6 Surge Protection: Surge protectors shall be installed in the controller cabinet for all conductors (power and data) between structure-mounted and cabinet-mounted DMS equipment. Each surge protector shall be grounded by connecting it to a terminal block in the cabinet rack. The terminal block shall be attached directly to the cabinet ground using a #8 AWG copper ground wire. Surge protector leads shall be a maximum of 3 feet in length and be installed as straight as possible.

484.4 TESTING

The contractor shall conduct the following tests in accordance with the test requirements of Section 480 *Intelligent Transportation System General Requirements*. The contractor shall furnish all necessary test equipment and test software required to perform the tests.

484.4.1 Stand-Alone Test:

The contractor shall conduct a stand-alone test in the presence of the Engineer and DMS supplier that exercises all stand-alone (non-network) functional operations of the DMS assembly.

The stand-alone test for the DMS assembly shall be performed using both the sign controller unit front display panel and the MCDOT maintenance laptop computer. At a minimum, the test shall verify the following:

(a) Downloading of messages;
(b) Placing messages in memory and verifying content;
(c) Display of all characters in the sign;
(d) Display of static, alternating (that is, two-panel), and flashing messages of 54 characters;
(e) Selection of messages;
(f) Resumption of normal operations after power is restored;
(g) Diagnostic activation of all pixels at selectable intervals; and
(h) Diagnostic routines and failure reporting.

484.5 DOCUMENTATION:

The Contractor shall provide maintenance manuals for the DMS equipment as required by the Intelligent Transportation System General Requirements. The documentation shall include the following diagrams:

1. Control signal path diagram; and
2. System connection diagram.

484.6 MEASUREMENT:

DMS assemblies will be measured as a unit complete in place including required testing and documentation.

484.7 PAYMENT:

The accepted quantities of DMS assemblies will be paid for at the contract unit price. Payment for DMS assemblies shall be full compensation for all labor, materials, and equipment required for installation, testing, documentation, and training.

Part 400 is supplemented with the following new Section:

SECTION 486

COMMUNICATIONS EQUIPMENT

486.1 DESCRIPTION:

The work under this section shall consist of furnishing, installing, and testing communications equipment systems including cables, surge protection, lightning protection, software, and accessories. All communications equipment shall be system compatible with existing MCDOT ITS equipment.

486.2 MATERIALS AND EQUIPMENT:

486.2.1 Wireless Access Point: The wireless access point shall be capable of serving as an outdoor Access Point, Client, or Bridge capable of 100Mbps+ speeds and 600mW of power at 2.4 GHZ or 5.0 GHz frequencies as directed by the Engineer. The access point shall be capable of being connected to any type of RF antenna using N-type male RF connectors.

The wireless access points shall comply with the following minimum requirements:

1. The RF connector shall be an integrated N-type male jack capable of connecting directly to the antenna.
2. Shall have a one (1) RJ-45 10/100 Base TX Ethernet port.

3. The access point shall be equipped with a minimum of 32MB SDRAM and 8MB Flash memory.
4. The access point shall FCC part 15.246, IC RS210, CE and RoHS compliant.
5. Power Supply: The wireless access point shall be powered using passive power over Ethernet (POE) injectors as specified in Section 486.2.4.
6. Mechanical:
   a. Enclosure shall be an outdoor UV stabilized plastic.
   b. Shall meet all specified requirements during uncontrolled environmental operations characterized by an operating temperature range of -40 to +80 degree C (-40 to +176 degree F) and a relative humidity range of 5 to 95% (non-condensing).
   c. The weight shall not exceed 0.4 lbs.
   d. Shall have weatherproof seals/gaskets at the Ethernet port end.
7. Shall have signal strength LED indicators to assist in antenna alignment.
8. Cables used to connect the wireless access point shall meet the requirements of Section 486.2.12.

486.2.2 Rugged Linear 2x2 MIMO Radio: The 2x2 MIMO radio shall be capable of serving as an outdoor Access Point, Client, or Bridge capable of 150Mbps+ data transfer speeds with a minimum range of 50 km at 900 MHz, 2.4 GHZ or 5.0 GHz frequencies as directed by the Engineer. The radio shall be capable of being connected to any type of high gain RF antenna using N-type male RF connectors.

The radio shall comply with the following minimum requirements:

1. Two Reverse Polarity-Sub Miniature Version A (RP-SMA) RF connectors integrated to the body of the radio.
2. Shall have one (1) RJ-45 10/100 Base TX Ethernet port.
3. Shall have 64MB SDRAM and 8MB Flash memory.
4. Shall be FCC part 15.246, IC RS210, CE and RoHS compliant.
5. Shall be powered using passive power over Ethernet (POE) injectors as specified in Section 486.2.4.
6. Shall be enclosed in an outdoor UV stabilized plastic.
7. Shall meet all specified requirements during uncontrolled environmental operations characterized by an operating temperature range of -30 to +75 degree C (-22 to +167 degree F) with no fans and a relative humidity range of 10 to 95% (non-condensing).
8. The weight shall not exceed 1.25 lbs.
9. Shall have weatherproof seals/gaskets at the Ethernet port end.
10. Shall be capable of withstanding shock and vibration per ETSI300-019-1.4.
11. Shall have signal strength LED indicators to assist in antenna alignment.
12. The cables used to connect the MIMO radio shall meet the requirements set in Section 486.2.12.
13. The radio shall include a pole mounting kit.

486.2.3 Broadband Customer Premises Equipment (CPE): The broadband CPE shall be capable of serving as clients or bridges in Point-to-point (PTP) or Point-to-Multi Point

(PTMP) networks, with 150Mbps+ data transfer speeds with a minimum range of 15 km at 2.4 GHZ or 5.0 GHz frequencies as directed by the Engineer. The broadband CPE shall have an integrated hi-gain antenna.

The broadband CPE shall comply with the following minimum requirements:

1. Shall have one external Reverse Polarity-Sub Miniature Version A (RP-SMA) RF connector integrated to the body of the CPE.
2. Shall have one (1) RJ-45 10/100 Base TX Ethernet port.
3. Shall have 32MB SDRAM and 8MB Flash memory.
4. Shall be FCC part 15.246, IC RS210, CE and RoHS compliant.
5. The broadband CPE shall be powered using passive power over Ethernet (POE) injectors as specified in Section 486.2.4.
6. Shall be enclosed in an outdoor UV stabilized plastic.
7. Shall meet all specified requirements during uncontrolled environmental operations characterized by an operating temperature range of -30 to +75 degree C (-22 to +167 degree F) with no fans and a relative humidity range of 10 to 95% (non-condensing).
8. The weight shall not exceed 1.0 lbs.
9. Shall have weatherproof seals/gaskets at the Ethernet port end.
10. Shall be capable of withstanding shock and vibration per ETSI300-019-1.4.
11. Shall be equipped with an integrated antenna with a minimum gain of 8 dB1.
12. The cables used to connect broadband CPE equipment shall meet the requirements set in Section 486.2.12.
13. The broadband CPE shall include a pole mounting kit.

486.2.4 Power over Ethernet (POE) Injectors: The Power over Ethernet (POE) injectors shall be equipped to provide passive power over Ethernet.

The POE injectors shall meet the following functional requirements:

1. Shall be rated for 15 VDC, 24 VDC or 48 VDC as required by the equipment being served. The POE adapter shall be capable of receiving input voltage ranging from 90-260 VAC @ 47-63 Hz.
2. Shall have a minimum of two RJ-45 type ports for communications and power.
3. Shall meet all specified requirements during uncontrolled environmental operations characterized by an operating temperature range of -30 to +75 degree C (-22 to +167 degree F) a storage temperature range of -20 to +85 degrees C (-4 to +185 degree F) and a relative humidity range of 5 to 95% (non-condensing).
4. The power consumption of the POE injectors shall not exceed 10 Watts.

486.2.5 External Antenna: When available the Contractor shall provide and install antennas from the same manufacturer as that of the wireless equipment.

486.2.5.1 Omni Directional Antenna: The omnidirectional antennas used for 2.4 GHZ or 5.0 GHz frequencies shall meet the following requirements:

1. Shall provide a nominal gain of at least 10 dBi.

2. The antenna dimensions shall not exceed 60 inches (height) by 6 inches (width) for 2.4 GHz antennas and 40 inches (height) by 4 inches (width) for 5.0 GHz antennas.
3. Shall be supplied with pole mounting brackets and weather proof RF jumper cables.
4. Shall have a Voltage Standing Wave Ratio (VSWR) of less than 1.7:1.
5. Shall have a minimum cross polarization isolation of 25 dB.
6. Shall operate within a temperature range of -30 to +80 degree C (-22 to +176 degree F) and a relative humidity range of 5 to 95% (non-condensing).
7. The antenna and mounting brackets shall be capable of operating in wind conditions of up to 125 mph.

486.2.5.2 Dish Antenna: The dish antennas used for 2.4 GHZ or 5.0 GHz frequencies shall meet the following requirements:

1. Shall provide a nominal gain of at least 10 dBi.
2. The antenna dimensions shall not exceed 30 inches diameter for 2.4 GHz antennas and 42 inches diameter for 5.0 GHz antennas.
3. Shall be supplied with a pole mounting brackets and weather proof RF jumper cables.
4. The weight of the antenna shall not exceed 25 pounds for 2.4 GHz antennas and 30 pounds for 5.0 GHz antennas.
5. Shall have a Voltage Standing Wave Ratio (VSWR) of less than 1.6:1.
6. Shall have a minimum cross polarization isolation of 35 db.
7. Shall operate within a temperature range of -30 to +75 degree C (-22 to +167 degree F) and a relative humidity range of 5 to 95% (non-condensing).
8. The antenna and mounting brackets shall be capable of operating in wind conditions of up to 100 mph.

486.2.5.3 Yagi Antenna: The Yagi antennas used for 900 MHz frequencies shall meet the following requirements:

1. Shall provide a nominal gain of at least 16 dBi.
2. The antenna dimensions shall not exceed 60 inches (length) by 10 inches (width).
3. Shall be enclosed in outdoor UV stabilized plastic.
4. The antenna shall be supplied with pole mounting brackets and weather proof RF jumper cables.
5. The weight of the antenna shall not exceed 1 lb.
6. Shall have a Voltage Standing Wave Ratio (VSWR) of less than 1.5:1.
7. Shall be capable of dual linear polarization.
8. Shall have a minimum cross polarization isolation of 20 db.
9. Shall operate within a temperature range of -30 to +75 degree C (-22 to +167 degree F) and a relative humidity range of 5 to 95% (non-condensing).
10. The antenna and mounting brackets shall be capable of operating in wind conditions of up to 120 mph.

486.2.5.4 Sector Antenna: The Sector antennas used for 900 MHz, 2.4 GHZ or 5.0 GHz frequencies shall meet the following requirements:

1. Shall provide a nominal gain of at least 16 dBi.
2. The antenna dimensions shall not exceed 52 inches (length) by 12 inches (width) by 6 inches (depth) for 900 MHz antennas, 30 inches (length) by 6 inches (width) by 4 inches (depth) for 2.4 GHz antennas and 5.0 GHz antennas.
3. Shall be enclosed in outdoor UV stabilized plastic.
4. The antenna shall be supplied with pole mounting brackets and weather proof RF jumper cables.
5. The weight of the antenna shall not exceed 30 pounds for 900 MHz antennas, 14 pounds for 2.4 GHZ and 5.0 GHz antennas.
6. Shall have a Voltage Standing Wave Ratio (VSWR) of less than 1.5:1.
7. Shall be capable of dual linear polarization.
8. Shall have a minimum cross polarization isolation of 30 db for 900 MHz antennas, 28 dB for 2.4 GHz antennas and 22 dB for 5.0 GHz antennas.
9. Shall operate within a temperature range of -30 to +80 degree C (-22 to +176 degree F) and a relative humidity range of 5 to 95% (non-condensing).
10. The antenna and mounting brackets shall be capable of operating in wind conditions of up to 125 mph.

486.2.6 Industrial Frame Router: The industrial frame router shall be capable of performing the following networking functions:

1. Terminal Server
2. Ethernet Switch
3. IP Router
4. Frame Relay Access Device
5. Serve as a Channel Service Unit/Data Service Unit (CSU/DSU)

Industrial frame routers shall be supplied with all necessary cabling to provide a functional system.

Industrial frame routers shall be located in the traffic signal controller cabinets and shall comply with the following:

486.2.6.1 WAN Interface

Physical

1. RJ-48 Connector
2. 56/64k Wan option
3. 1.544 Mbps nx 56/64k Line Rate T1/E1 WAN option
4. Integral CSU/DSU

Protocol: Frame Relay, IP

486.2.6.2 Serial Interface

Physical

1. Eight (8) RS232 DTE serial interfaces with DB9 female connectors RJ-48 Connector
2. DB9 female connector
3. Serial Data rates from 300 bps to 230.4 kpbs
4. Data Length:1-32 bits supporting legacy SCADA protocols.

Protocol:
1. Async to TCP/IP
2. TCP/IP to serial terminal server, reverse terminal server
3. Select SCADA bit oriented protocols CONITEL, PMS91, MCS-11, GETAC
4. SCADA frame forwarding relay

486.2.6.3 Ethernet Interface

Physical
1. Five (5) RJ-45 10/100 Base TX Ethernet ports with auto-sensing of fixed speed options
2. Full Duplex, Half Duplex with Auto Duplex

Protocol:
1. Ethernet, TCP/IP
2. Full wire speed switching between ports
3. IEEE 802.3x: Flow Control
4. IEEE 802.1Q: Port based VLANs per
5. IEEE 802.1d: Spanning Tree
6. IEEE 802.1w Rapid Spanning Tree
7. Support for 4096 MAC addresses

486.2.6.4 Power Supply:
1. High Voltage: 1A, 90 to 250 VAC/VDC, 50 to 60 Hz, Power Consumption not to exceed: 85 W
2. Low Voltage: 4.5 A, 18 to 60 VDC, 50 to 60 Hz, Power Consumption not to exceed: 81 W

486.2.6.5 Mechanical:
1. Enclosure: Rugged 18-gauge high-strength galvanized steel case with metal mounting plate included. Suitable for 19” front rack, mid-mount or panel mounting. Enclosure shall be permanently and clearly identified with name, model number, serial number, and any other pertinent information required to facilitate equipment maintenance.
2. Meet all specified requirements during uncontrolled environmental operations characterized by an operating temperature range of -40 to +75 degree C (-40 to +167 degree F) with no fans and a storage temperature range of -40 to +85 degrees C (-40 to +185 degree F)and a relative humidity range of 10% to 95% (non-condensing).
3. The weight of the industrial frame router shall not exceed 12 lbs.

486.2.7 Field Hardened Network Gateway Router (FHNGR): The FHGNR shall operate as a Layer 3 device to serve as a network gateway between the MCDOT TMC, Field Hardened Ethernet Backbone Switch, and the Field Hardened Ethernet Access Switches in the field. The FHNGR shall be used in conjunction with a terminal server to interface with Video Detection, Wireless Radio system, and the Signal Controller.

486.2.7.1 Functional Requirements: The FHGNR shall meet the following requirements:

1. The FHGNR shall support standard OSI Layer 3 functionality.
2. It shall support direct connectivity to existing networks configured in ring and mesh fault tolerant topologies enabling applications to operate reliably, and with low latency.
3. It shall be System Compatible with existing MCDOT ITS equipment especially the Field Hardened Ethernet Access and Backbone Switches.
4. It shall have licenses for all software or hardware in the system.
5. It shall be configurable in point-to-point, daisy-chain, ring, and mesh topologies for connectivity into new and existing fiber optic and copper based Ethernet networks.
6. It shall be designed with an operating system that allows individual ports to be configured for port mirroring, speed, duplex, auto-negotiation, and flow control. The operating system shall also provide for broadcast storm frame filtering with user defined thresholds.
7. It shall be designed with an operating system that allows for the collection of statistics on a per port basis and provides for full support of Remote Monitoring (RMON) statistics, history, alarms, and event groups.
8. It shall be designed with an operating system that provides port security to prevent unknown devices from gaining access to the network. Unauthorized attempts to access the network shall result in the port being shut down for a period of time along with Simple Network Management Protocol (SNMP) trap and alarm generation.
9. It shall be enclosed in a high-strength 18-gauge galvanized steel enclosure to seal out insects, dirt, smoke, and other contaminants.
10. All modules and assemblies shall be clearly identified with name, model number, serial number, or any other pertinent information required to facilitate equipment maintenance.

The equipment shall comply with the following Institute of Electrical and Electronics Engineers (IEEE) Network Standards:

1. IEEE 802.1q-VLANs
2. IEEE 802.1w - Rapid Reconfiguration of Spanning Tree
3. IEEE 802.3ab-1000BASE-T Gbit/s Ethernet over twisted pair at 1 Gbit/s
4. IEEE P802.1p-Diffserv, traffic Prioritization for routed IP flows/ports
5. IEEE 802.3-10BaseT
6. IEEE 802.3d-MAC Bridges
7. IEEE 802.3u-100BaseTX, 100BaseFX
8. IEEE 802.3x-Flow Control
9. RFC768-UDP

10. RFC783-TFTP
11. RFC791-IP
12. RFC792-ICMP
13. RFC793-TCP
14. RFC826-ARP
15. RFC854-Telnet Protocol Specification
16. RFC1305-NTP
17. RFC1321-PPP (MD5)
18. RFC1332-PPP (IPCP)
19. RFC1334-PPP Authentication
20. RFC1490-Frame Relay
21. RFC1493-BRIDGE-MIB
22. RFC1519-CIDR
23. RFC1541-DHCP (client)
24. RFC1661-PPP
25. RFC1907-SNMPv2-MIB
26. RFC2012-TCP-MIB
27. RFC2013-UDP-MIB
28. RFC2068-HTTP
29. RFC2338-VRRP
30. RCF2578-SNMPv2-SMI
31. RCF2579-SNMPv2-TC
32. RFC2819-RMON MIB
33. RFC2865-RADIUS
34. RFC3414-SNMPv3-USM
35. RFC-SNMPv3-VACM

486.2.7.2 FHNGR Physical Requirements: The network gateway router shall meet the following physical requirements:

486.2.7.2(A) Ports: The network gateway router shall contain a minimum of:

1. Four 10/100 Ethernet ports configured as auto negotiating RJ45 copper ports
2. Four 100M SFP Ethernet ports for single mode fiber up to 40km.
3. Two 10/100/1000 Gigabit Ethernet copper ports
4. Four Serial DB9 ports with software selectable DB9 interface for data rates ranging from 300 bps to 230.4 kbps.
5. One cellular WAN port supporting 3G EVDO, EVDO & CDMA
6. Four T1/E1 WAN port

486.2.7.2(B) Environmental Monitoring: The FHNGR shall be equipped with two software controllable Form C type NC/NO configurable alarm ports.

486.2.7.2(C) Operating Environment: The FHNGR shall be operable in the following environment:

1. Operating/Storage Temperature Range: - 40 to +185 degree C
2. Ambient Relative Humidity: 5 to 95% Noncondensing

3. Altitude:-200 to +13,000 feet

486.2.7.2(D) Power: The FHNGR shall operate at 24-28 Volts DC, 1.3 Amperes

486.2.7.2(E) Mounting: The FHNGR shall be 19” Rack mountable.

486.2.7.3 FHNGR Network Software Requirements: The Contractor shall provide a Managed Network Software (MNS) for use with the FHGNR. The MNS shall:

1. Be capable of configuring Ethernet ports as switched, routed or a combination of both.
2. Be capable of configuring serial ports as RS232 or RS485 ports
3. Have necessary menus in the WAN configuration to configure T1/E1 ports
4. Support PPP, RSTP-2004, STP, SNMP, SNTP and VRRP protocols.
5. Be capable of providing DHCP services.
6. Provide remote access for secure administration.
7. Support tagged based VLAN’s as access VLANs or trunk ports.
8. Be capable of storing a log of most recent events.
9. Provide Modbus interoperability over Ethernet or serial ports.
10. Provide QoS prioritization.
11. Store different configuration files locally or on a remote server and be capable of switching to different configurations easily.
12. Include protocol analyzer for trouble shooting.

486.2.8 Serial Expansion Device: Serial expansion devices shall enable the connection of peripheral serial devices over RS232 port via a 10/100 Ethernet LAN port with RJ45 connectors.

486.2.8.1 Serial Expansion Device Functional Requirements: The serial expansion device shall meet the following functional requirements:

1. A minimum 230 Kbps throughput capacity on all ports
2. Port buffering up to 64 Kbps per port;
3. Frequency range of 47 to 63 Hz.

486.2.8.2 Serial Expansion Device Physical Requirements:

486.2.8.2(A) Ports: Shall contain a minimum of:

1. One (1) 10/100 Ethernet LAN port with RJ45 connector.
2. Four (4) RS-232 serial ports.

486.2.8.2(B) Surge Protection: Shall have surge protection on all ports.

486.2.8.2(C) Operating Environment Shall be operable in the following environment:

1. Operating/Storage Temperature Range: - 29 to +165 degree F
2. Ambient Relative Humidity: 5 to 95% (non-condensing)

486.2.8.2(D) Power: Shall operable at 110 to 250 Volts VAC with a power consumption not to exceed 12 W.

486.2.8.2(E) Mounting:

1. Shall be 19" Rack mountable.
2. Shall be supplied with all necessary cabling to provide full operation. The terminal server shall be compatible with the ASC2/2100 Signal Controller.

486.2.9 Video Encoder: The Video Encoder shall allow for the transmission of live video, data, and audio over an existing Ethernet network, requiring an Internet Protocol (IP) address or Internet Explorer 5.5 or higher, or shall work as an analog-to-Ethernet "bridge" controlling matrices, multiplexers, and pan/tilt/zoom cameras. The video encoder shall operate in a box-to-box configuration allowing for the encoded video to be displayed on an analog monitor.

486.2.9.1 Functional Requirements:

486.2.9.1(A) Video:

1. Compression algorithm: Dual Stream, MPEG-4, H.264
2. Video format: 1x NTSC / PAL (Auto detect)
3. Connector type: BNC
4. Data rate (bandwidth): 9.6 kbps to 4 Mbps
5. Encoding-decoding latency: 200 ms
6. Frame rate: 1 to 30 fps
7. Video Decoder: Used to display the video on a standard analog NTSC or PAL monitor
8. In-/output level: 1 Vpp (±3 dB)
9. Input impedance: 75Ω/Hi-Z selectable
10. Number of output streams: 5 (multi- and/or unicast)
11. Image Resolution NTSC: D1(720x480), ½HD1(352x480), 2CIF(720x240), CIF (352x240), QCIF(176x144) & VGA

486.2.9.1(B) Audio: Connector Type: RJ45

1. In-/output level: 0 dBV (+6 dBV max.)
2. Input impedance: >50 kΩ or 600 Ω bal.
3. Max. bandwidth: 20 Hz to 20 kHz
4. Number of channels: 2 (full duplex)
5. Number of streams: 3 (multi- and/or unicast)
6. Output impedance: <50 Ω bal.
7. Sampling rate: 44, 16 or 8 kHz (selectable)
8. Sampling resolution: 8/16-bits (linear PCM or G.711)
9. Signal to Noise Ratio: >75 dBA
10. Total harmonic distortion: <0.25% at nom. level

486.2.9.1(C) Transmission Interface:

1. Connector: RJ45

2. Interface: 10/100Base-TX Fast Ethernet
3. Number of interfaces: 1
4. Protocols: MPEG-ES or TS, RTP, UDP, IP, DHCP, IGMP, MX/IP, HTTP, and SNMPv2
5. Selectable: Auto Negotiation, Half Duplex/Full Duplex, 10/100 Mb
6. SFP Slot: One 100 Mbps SFP

486.2.9.1(D) Management:

1. Network Management & Control: SNMPv2, SNM™, MX™, HTTP (password protected)
2. PC Software: Manages the installation and maintenance of all hardware transmitters and receivers on the network
3. LED Status indicators for Power On, No Video, All Lines Operational, Rx/Tx failures and Ethernet ports

486.2.9.1(E) Environmental:

1. Operating temperature: -40 to +74 degree C (–40° to +165 degree F)
2. Relative humidity: 10 to 95% (non-condensing)

486.2.9.1(F) Mechanical:

1. Dimensions (h x w x d): Not to exceed 5.0 x 2.0 x 8.0 in.
2. Housing: Rack-mount or standalone
3. Weight (approx.): Not to exceed 2.0 lbs

486.2.9.1(G) Contact Closure:

1. Connector type: RJ45
2. Input: +3 V pull-up, 2 kΩ
3. Latency: <5 ms
4. Number of channels: 2 (full duplex)
5. Number of streams: 2x 3 (multi- and/or unicast)
6. Output Fail-safe, potential-free
7. Switch rating: 2 A at 30 Vdc
8. Threshold 1.5 V

486.2.9.1(H) Data:

1. Connector: RJ45
2. Data rate: UART mode 300 to 230.4k baud, Latency <5 ms
3. Data rate sampling mode: DC to 19.2 kbps
4. Format: Asynchronous, serial
5. Interfaces: 1x RS232, 1x RS422/485 (2- or 4-wire)
6. Latency: 10 ms
7. Number of channels: 2 (full duplex)
8. Number of streams: 2x 3 (multi- and/or unicast)
9. Sampling rate: 153 k samples/sec

486.2.9.2 Physical Requirements: The Video Encoder shall be constructed using the latest available techniques with a minimum number of parts, sub-assemblies, circuits, cards, and modules to maximize standardization and commonality in the equipment design.

Equipment shall be designed for ease of maintenance, with all component parts being readily accessible for inspection and maintenance. Test points shall be provided for checking essential voltages and waveforms.

All external screws, nuts, and locking washers shall be stainless steel. Self-tapping screws shall not be used unless specifically approved by the Engineer.

All parts shall be made out of corrosion resistant material, such as plastic, stainless steel, anodized aluminum or brass.

All materials shall be protected from fungus growth and moisture deterioration.

All dissimilar metals shall be separated by an inert dielectric material.

486.2.9.3 Operational Requirements: The Video Encoder shall interoperate with an existing central software driver, available from 360 Surveillance. A list of available software drivers may be found at: http://360surveillance.com. All components of the Video Encoder shall be off-the-shelf items.

486.2.10 Field Hardened Ethernet Access Switch (FHEAS):

486.2.10.1 Functional Requirements: All Field Hardened Ethernet Access Switches installed on a project shall be of the same manufacturer. All equipment shall be new and in strict accordance with the details shown on the plans and the specifications.

A high-performance managed FHEAS shall support standard Open System Interconnection (OSI) Layer 2. FHEAS shall support direct connectivity to existing networks configured in ring and mesh fault tolerant topologies enabling applications to operate reliably, and with low latency.

All equipment shall include licenses, where required, for any software or hardware in the system.

FHEAS shall comply with the following Institute of Electrical and Electronics Engineers (IEEE) Standard Specifications:

1. IEEE 802.1d: MAC Bridges
2. IEEE 802.1d: Spanning Tree Protocol
3. IEEE 802.1p: Class of Services
4. IEEE 802.1q: VLAN Tagging
5. IEEE 802.1Q-2005: MSTP
6. IEEE 802.1w: Rapid Spanning Tree Protocol

7. IEEE 802.3: 10BASE-T
8. IEEE 802.3ab: 1000BASE-TX
9. IEEE 802.3ad: Link Aggregation
10. IEEE 802.3d: MAC Bridges
11. IEEE 802.3u: 100BASE-TX, 100BASE-FX
12. IEEE 802.3x: Flow Control
13. IEEE 802.3z: 1000BASE-LX
14. RFC768: UDP
15. RFC783: TFTP
16. RFC791: IP
17. RFC792: ICMP
18. RFC793: TCP
19. RFC826: ARP
20. RFC854: Telnet
21. RFC894: IP over Ethernet
22. RFC1112: IGMP v1
23. RFC1493: Bridge MIB
24. RFC1519: CIDR
25. RFC1541: DHCP (client)
26. RFC1907: SNMP v2 MIB
27. RFC2012: TCP MIB
28. RFC2013: UDP MIB
29. RFC2030: SNTP
30. RFC2068: HTTP
31. RFC2236: IGMP v2
32. RCF2284: EAP
33. RCF2475: Differentiated Services
34. RCF2865: RADIUS
35. RCF3414: SNMPv3-VSM
36. RCF3415: SNMPv3-VACM
37. RFC2578: SNMP v2 SMI
38. RFC2579: SNMP v2 TC
39. RFC2819: RMON MIB
40. RFC2863: IF MIB

486.2.10.2 FHEAS Physical Requirements: The FHEAS shall have a physical design that meets the following minimum requirements:

1. Minimum two Gigabit Ethernet full-duplex switched Ethernet single-mode fiber ports.
2. Minimum six switched 10/100 MB or better Ethernet or higher copper (RJ 45) ports.
3. Be configurable in point-to-point, daisy-chain, ring, and mesh topologies for connectivity into new and existing fiber optic and copper based Ethernet networks.

4. Be *System Compatible* with existing MCDOT ITS equipment especially the Field Hardened Network Gateway Routers and Backbone Switches.
5. Have capability to support bi-directional single strand fiber
6. Have long haul optics capability that will support Gigabit distances up to 70 km.
7. Be designed with an operating system that allows individual ports to be configured for port mirroring, speed, duplex, auto-negotiation, and flow control. The operating system shall also provide for broadcast storm frame filtering with user defined thresholds.
8. Be designed with an operating system that allows for the collection of statistics on a per port basis and provides for full support of Remote Monitoring (RMON) statistics, history, alarms, and event groups.
9. Be designed with an operating system that provides port security to prevent unknown devices from gaining access to the network. Unauthorized attempts to access the network shall result in the port being shut down for a period of time along with Simple Network Management Protocol (SNMP) trap and alarm generation.
10. Have high-strength 18-gauge galvanized steel enclosure to seal out insects, dirt, smoke, and other contaminants.
11. Have clear identification for all modules and assemblies with name, model number, serial number, or any other pertinent information required to facilitate equipment maintenance.

The equipment shall have the following functionality and features:

486.2.10.2(A) Ports Performance

1. Provide Ethernet Single-mode Fiber ports that operate at 1000 Mbps with a link loss budget sufficient for the fiber link it will use.
2. Provide Ethernet RJ-45 ports that auto-negotiate operation at 10/100Mbps or higher if available.
3. Provide external optical attenuators as necessary to support interconnectivity with close range devices upstream or downstream.

486.2.10.2(B) Packet-Processing

1. Processing type: store and forward
2. Auto-learning: 8192 Media Access Control (MAC) address
3. Frame buffer memory: 2 Mbit
4. Switching Latency: 7 microsecond
5. Priority queues: 4
6. Virtual Local Area Networks (VLANs): 255
7. Internet Group Management Protocol (IGMP) multicast groups: 256
8. Switching bandwidth: 5.6 Gbps
9. Port Rate Limiting: 128kbps, 256 kbps, 512 kbps, 4 Mbps, 8Mbps
10. No Head of Line Blocking

486.2.10.2(C) Ethernet Network Connectors

1. Eight RJ-45 connector ports for 10/100 Mbps or higher

2. Two dual LC connector 1000 Mbps ports for single-mode fiber

486.2.10.2(D) LED Indicators: One LED for power; three LEDs per Ethernet port for link, Tx, and Rx activity.

486.2.10.2(E) Power Supply

1. AC power connector: Terminal block at rear of power supply chassis
2. Input Voltage: 85 to 264 VAC (auto-ranging)
3. Power Consumption: 8 watts (max)
4. Fast Transient Protection: Compliant with IEEE C37.90.1

486.2.10.2(F) Mechanical

1. Enclosure: Rugged 18-gauge high-strength galvanized steel case with metal mounting plate included. Suitable for stand-alone, shelf, pedestal or wall mounting. Enclosure shall be permanently and clearly identified with name, model number, serial number, and any other pertinent information required to facilitate equipment maintenance.
2. Meet all of its specified requirements when the input power is 115 VAC ± 10%, 60 ± 3 Hz, for any Field Hardened Ethernet Access Switch furnished or installed under this item.
3. Design the equipment such that the failures of the equipment shall not cause the failure of any other unit of equipment connected upstream or downstream of the device.
4. Make all parts out of corrosion resistant material, such as plastic, stainless steel, anodized aluminum or brass.
5. Protect all materials used in construction from fungus growth and moisture deterioration.

486.2.10.2(G) Environmental: The FHEAS shall meet all specified requirements during uncontrolled environmental operations characterized by an operating temperature range of -40 degrees to +85 degrees C (-40 degrees to +185 degrees F) and a relative humidity range of 10% to 95% (non-condensing).

486.2.10.2(H) Alarm: Form-C failsafe contact relay: 1A@30VDC

486.2.11 Field Hardened Ethernet Backbone Switch (FHEBS)

486.2.11.1 Functional Requirements: All Field Hardened Ethernet Backbone Switches shall be from the same manufacturer as the Field Hardened Ethernet Access Switches installed on the project. All equipment shall be new.

A high-performance and field hardened backbone switch shall support standard OSI Layer 2 functionality. The FHEBS shall support direct connectivity to existing networks configured in ring and mesh fault tolerant topologies enabling applications to operate reliably, and with low latency.

FHEBS shall include all equipment licenses, where required, for any software or hardware in the system.

FHEBS shall comply with the following Institute of Electrical and Electronics Engineers (IEEE) Standard Specifications:

1. IEEE 802.1D: Spanning Tree Protocol
2. IEEE 802.1D: MAC Bridges
3. IEEE 802.1p: Class of Services
4. IEEE 802.1q: VLAN Tagging
5. IEEE 802.1Q-2005: MSTP
6. IEEE 802.1w: Rapid Spanning Tree Protocol
7. IEEE 802.1x: Port Based Network Access Control
8. IEEE 802.3: 10BASE-T
9. IEEE 802.3ab: 1000BASE-TX
10. IEEE 802.3ad: Link Aggregation
11. IEEE 802.3d: MAC Bridges
12. IEEE 802.3u: 100BASE-TX, 100BASE-FX
13. IEEE 802.3x: Flow Control
14. IEEE 802.3z: 1000BASE-LX
15. RFC768: UDP
16. RFC783: TFTP
17. RFC791: IP
18. RFC792: ICMP
19. RFC793: TCP
20. RFC826: ARP
21. RFC854: Telnet
22. RFC894: IP over Ethernet
23. RFC1112: IGMP v1
24. RFC1493: Bridge MIB
25. RFC1519: CIDR
26. RFC1541: DHCP (client)
27. RFC1907: SNMP v2 MIB
28. RFC2012: TCP MIB
29. RFC2013: UDP MIB
30. RFC2030: SNTP
31. RFC2068: HTTP
32. RFC2236: IGMP v2
33. RCF2284: EAP
34. RCF2475: Differentiated Services
35. RFC2578: SNMP v2 SMI
36. RFC2579: SNMP v2 TC
37. RFC2819: RMON MIB
38. RFC2863: IF MIB
39. RCF2865: RADIUS
40. RCF3414: SNMPv3-USM

41. RCF3415: SNMPv3-VACM

486.2.11.2 FHEBS Physical Requirements: The FHEBS shall have a physical design that conforms to the following requirements:

1. Operates as a Layer 2 interface to the Network Gateway Router for all Field Hardened Ethernet Switches.
2. Provide nine built-in SFP 1000 MB full-duplex switched Ethernet single-mode fiber ports with the ability to reach the necessary distance.
3. Be *System Compatible* with existing MCDOT ITS equipment especially the Field Hardened Network Gateway Routers and Ethernet Access Switches.
4. Be configurable in point-to-point, daisy-chain, ring, and mesh topologies for connectivity into new and existing fiber optic and copper based Ethernet networks.
5. Have long haul optics capability that will support Gigabit distances up to 70 km.
6. Have capability to support bi-directional single strand fiber.
7. Be designed with an operating system that allows individual ports to be configured for port mirroring, speed, duplex, auto-negotiation, and flow control. The operating system shall also provide for broadcast storm frame filtering with user defined thresholds.
8. Be designed with an operating system allows for the collection of statistics on a per port basis and provides for full support of RMON statistics, history, alarms, and event groups.
9. Have high-strength 18-gauge galvanized steel enclosure to seal out insects, dirt, smoke, and other contaminants.
10. Have clearly identification for all modules and assemblies with name, model number, serial number, or any other pertinent information required to facilitate equipment maintenance.

The equipment shall have the following functionality and features:

486.2.11.2(A) Ports Performance:

1. Provide Ethernet Single-mode Fiber ports that operate at 1000 Mbps with a link loss budget sufficient for the link it will use.
2. Provide Ethernet RJ-45 ports that auto-negotiate operation at 10/100/1000 Mbps.
3. Provide external optical attenuators as necessary to support interconnectivity with close range devices upstream or downstream.

486.2.11.2(B) Packet-Processing:

1. Switching Method: Store and Forward
2. Frame buffer memory: 2 Mbit
3. IGMP multicast groups: 256
4. MAC address table size: 64kbytes
5. MAC addresses: 8192
6. Priority Queues: 4

7. Switching bandwidth: 18 Gbps
8. Switching latency: 7 us
9. Switching method: Store & Forward
10. VLANs: 255
11. Port Rate Limiting
12. No Head of Line Blocking

486.2.11.2(C) Ethernet Network Connectors:

1. Nine RJ-45 connector ports for 10/100/1000 Mbps
2. Nine dual SC connector 1000 Mbps ports for single-mode fiber

486.2.11.2(D) LED Indicators: One LED for power; three LEDs per Ethernet port for link, Tx, and Rx activity

486.2.11.2(E) Power Supply:

1. AC power connector: Terminal block at rear of power supply chassis
2. Input Voltage: 85 to 300 VAC (auto-ranging)
3. Power Consumption: 30 watts (max)
4. Fast Transient Protection: Compliant with IEEE C37.90.1

486.2.11.2(F) Mechanical:

1. Enclosure: Rugged 18-gauge high-strength galvanized steel case with metal mounting plate included. Suitable for stand-alone, rack, shelf, pedestal or wall mounting. Enclosure shall be permanently and clearly identified with name, model number, serial number, and any other pertinent information required to facilitate equipment maintenance.
2. FHEBS shall comply with all specified requirements when the input power is 115 VAC ± 10%, 60 ± 3 Hz, for any FHEBS furnished or installed under this item.
3. The equipment shall be designed such that the failures of the equipment shall not cause the failure of any other unit of equipment connected upstream or downstream of the device.
4. All parts shall be made out of corrosion resistant material, such as plastic, stainless steel, anodized aluminum or brass.
5. All materials used in construction shall be protected from fungus growth and moisture deterioration.

486.2.11.2(G) Environmental: All specified requirements shall be met during uncontrolled environmental operations characterized by an operating temperature range of -40 degrees to +85 degrees C (-40 degrees to +185 degrees F) and a relative humidity range of 10% to 95% (non-condensing).

486.2.11.2(H) Alarm: Form-C failsafe contact relay: High Voltage - 2A @ 250 VAC/125 VDC, Low Voltage - 1A@30VDC

486.2.12 Cables for Communication Devices:
RF cables shall be used to connect the Antennas to the wireless equipment where required. Ethernet cables shall be used to provide power over Ethernet and for connecting the communications equipment to the internet backbone or client devices as applicable.

486.2.12.1 RF Jumper Cables: The cables used for communications equipment shall meet the following physical requirements:

1. RF jumper cables shall be low loss type with a maximum attenuation of 3.9 dB per 100 feet @ 900 MHz.
2. RF jumper cables shall have preinstalled Type N-connections for connecting the antenna with the wireless equipment.

486.2.12.2 Ethernet cables: The cables used for communications equipment shall meet the following physical requirements:

1. Ethernet cables shall be shielded Category 5e (Cat5e) or Category 6 (Cat6) twisted pair copper cables.
2. Ethernet cables shall comprise of 24AWG twisted pairs copper cables.
3. Ethernet cables shall be equipped with an Electrostatic Discharge (ESD) drain wires to prevent damage to the equipment from electrostatic discharge.
4. Ethernet cables shall have a minimum of one 0.35 μm foil shield.
5. Ethernet cables shall be enclosed in an outdoor UV rated PVC jacket.
6. Ethernet cables shall have preinstalled connections for 10/100 Mbps Ethernet connectivity.

486.3 INSTALLATION REQUIREMENTS:

486.3.1 Personnel Qualifications: The minimum qualifications required for the Contractor or designated subcontractors involved in the installation and testing of the Ethernet equipment are:

1. Five years' experience in the installation and configuration of Ethernet equipment.
2. Two years direct experience in the configuration and deployment of the Rapid Spanning Tree protocol.
3. Two installed systems where Ethernet switches are installed and the system has been in continuously satisfactory operation for at least two years. The Contractor shall submit as proof, photographs or other supporting documents, and the names, addresses and telephone numbers of the operating personnel who can be contacted regarding the communication system.
4. Documentation of contractor qualifications shall be approved by the Engineer prior to purchasing the FHEAS.

486.3.2 General Requirements: The Contractor shall meet the following minimum requirements for the installation and testing of the communications equipment:

1. The equipment shall be installed to provide for ease of maintenance, all component parts shall be readily accessible for inspection and maintenance.

2. All external screws, nuts and locking washers shall be stainless steel. Self-tapping screws shall not be used unless specifically approved by the Engineer.
3. The Contractor shall comply with all requirements of the National Electrical Code for all wiring external to the FHEAS switch. The Contractor shall cut all wires to proper length before assembly. The Contractor shall neatly lace wires into cable with nylon lacing or plastic straps. Secure cables with approved clamps for both fiber and copper cable types. Provide service loops at all connections.
4. Connecting harnesses (i.e. jumper cables) shall be of appropriate length with a minimum length of one foot and terminated with matching connectors for interconnection with the FHEAS switches.
5. The Contractor shall separate dissimilar metals by inert dielectric materials.

Testing, warranties, documentation, and training shall conform to the Intelligent Transportation System General Requirements.

486.3.3 Video Encoder: The Contractor shall install the video encoder in the CCTV panel that is mounted on the lower right hand corner on the left side of the traffic signal cabinet per the CCTV Construction Requirements.

486.4 MEASUREMENT:

Communications equipment systems including Wireless Access Points, Rugged 2x2 MIMO Radios, Broadband Customer Premises Equipment, Omnidirectional Antennas, Dish Antennas, Yagi Antennas, Sector Antennas, Industrial Frame Routers, Field Hardened Network Gateway Routers, Serial Expansion Devices, Field Hardened Ethernet Access Switches and Field Hardened Backbone Switches, will be measured as a unit for each type furnished, installed, made fully functional, tested, and accepted COMPLETE IN PLACE.

486.5 PAYMENT:

The accepted quantities of the items measured as above will be paid for at the contract unit price which shall be full compensation for the work described including testing, warranty, documentation, and training.

The price will include all equipment described under these items, all cables and connectors, all documentation and testing, and the cost of furnishing all labor, materials, software, warranty, training, and equipment necessary to complete the work. Items such as cables, mounting, excavation, surge suppression, lightning protection, local software, and various accessories as needed will be included in the price.

The Power over Ethernet (POE) Injectors will not be measured for payment. The cost of furnishing and installing the POE Injector will be included in the price of the equipment it provides power to.

The Video Encoder will not be measured for payment. The cost of furnishing and installing the Video Encoder will be included in the price of the CCTV camera assembly.

Part 500 add the following new Section:

SECTION 502

DRILLED SHAFT FOUNDATIONS

502.1 DESCRIPTION:

502.1.1 General: The work under this Section shall include furnishing all materials and constructing reinforced concrete shafts formed within a drilled excavation. Each Drilled Shaft Foundation shall consist of a shaft section with or without casing left in place, as specified or requested, with or without a rock socket or bell footing. Each Drilled Shaft Foundation shall be constructed to conform to the details and dimensions shown on the Project Plans, and the requirements of these Specifications and the Special Provisions.

502.1.2 Installation Plan: The Contractor shall submit to the Engineer, for review and approval, a detailed Installation Plan. The Installation Plan shall be based on available geotechnical information. To assist in plan evaluation and upon request by the Engineer, the Contractor shall provide copies to the Engineer of the geotechnical information used to develop the Installation Plan. The Installation Plan shall contain the following information:

(1) Equipment: List of proposed equipment to be used including cranes, drills, augers, bailing buckets, final cleaning equipment, desanding equipment, slurry pumps, sampling equipment, tremies or concrete pumps, casing, and any other equipment essential to the successful installation of the proposed Drilled Shaft Foundations. Information provided on each proposed equipment unit shall be sufficient to identify the unit in the current edition of the Rental Rate Blue Book.

(2) Personnel: List of all personnel to be committed to the installation of the Drilled Shaft Foundations on the project, and a summary of the relevant experience of each individual, including their involvement in the projects listed under (11).

The On-Site Supervisor in charge of the installation of the Drilled Shaft Foundations shall have not less than five (5) years of comparable in-charge experience with drilled shaft installations similar in nature and magnitude to the foundation requirements for the specified project. The On-Site Supervisor shall be on or immediately available to the project during all foundation construction activities.

At least one (1) Drill Operator, having not less than five (5) years of experience on the equipment that the Contractor proposes to use, working on drilled shaft foundation

installations similar to those for the specified project, shall be on or available to the project during all foundation construction activities.

(3) Construction Sequence: Details of the overall construction operation sequence, and the sequence of shaft installation in bents or groups. Supporting justification shall be provided for all variations between the Contractor's proposed sequence of shaft installation, and shaft sequence requirements called out on the Project Plans.

(4) Shaft Excavation: Details of shaft excavation methods, including equipment and procedures for checking the location, alignment, and dimensions of each shaft excavation.

(5) Slurry: When slurry is required, details of the method proposed to mix, circulate and desand the slurry, and methods proposed to comply with the requirements of Sections 502-3.4(A) and 502-3.7(C), including disposal of the slurry.

(6) Excavation Cleaning: Details of methods to clean the shaft excavation.

(7) Steel Reinforcement: Details of reinforcement placement, including support and centering methods.

(8) Concrete Mixes: Details of concrete mix designs, and the mitigation of possible loss of slump during placement.

(9) Concrete Placement: Details of concrete placement.

(10) Casing: Details of casing dimensions, material, and splice details.

(11) Construction Experience: List of all drilled shaft construction experience by the Contractor on previous projects of a similar nature, from the present and covering the past 3 to 5 years, highlighting major features of the drilled shaft operations and installations, describing any complexities and/or problems, and their subsequent resolution.

(12) Additional Information: Other information shown on the plans or requested by the Engineer.

(13) Emergency Shaft Joints: Emergency horizontal construction joint method if unforeseen stoppage of work occurs.

(14) Safety Plan: List of safety equipment, and the Contractor's Safety Plan for the drilled shaft construction.

The detailed Installation Plan for the Drilled Shaft Foundations, complete with all required information relevant to the project, and any supplemental information the Contractor believes relevant, shall be submitted to the Engineer not less than four (4) weeks before

the work on the drilled shafts is to begin. The Engineer will review the submittal package and return comments to the Contractor within ten (10) working days. No drilled shaft work shall be performed until the Contractor's final submittal has been approved by the Engineer. Such approval will not relieve the Contractor of responsibility for results obtained by use of the Installation Plan, or any other responsibilities under the Project Contract.

Based on the Contractor's experience, the project Contract Documents, and the Geotechnical and Foundation Report, including the Foundation Boring logs, if the Contractor reasonably concludes that slurry will not be required for shaft installation, information required under (5) Slurry may be omitted from the Installation Plan, subject to the approval of the Engineer. If it is subsequently determined that slurry will be required for shaft installation, the approval of the omission by the Engineer in no way relieves the Contractor of responsibility for constructing acceptable Drilled Shaft Foundations, in accordance with the requirements of Section 502.3.1(A).

The Contractor shall submit shop drawings in accordance with Section 105.2 for drilled shaft reinforcing steel, casings, and all other drilled shaft elements to remain in place and requiring prefabrication.

502.2 MATERIALS

502.2.1 Concrete: Concrete shall conform to the requirements of Section 725 for the class and strength shown on the plans, with the following additions or modifications:

(A) Cement: Concrete placed in drilled shaft excavations containing slurry or water shall have a cement content between 660 and 750 lbs/C.Y.

(B) Aggregate: Maximum aggregate size shall be limited to 1/5 of minimum clear bar spacing (vertical and horizontal), not to exceed one inch.

502.2.2 Reinforcing Steel: Reinforcing steel shall conform to the requirements of Section 727. Welded splices will not be allowed, except as shown on the Project Plans.

502.2.3 Casing: The casing shall be steel, and may be of unit or sectional construction. The casing shall be of sufficient strength to withstand handling and driving stresses, to withstand the pressure of concrete and the surrounding earth, and to prevent seepage of water. Steel shall conform to the requirements of AASHTO M 270M/M 270 (ASTM A709/A709M), Grade 36 (Metric Grade 250), unless otherwise specified in the Special Provisions.

When telescoped casing is used, the Contractor shall not allow concrete to overfill any interior casing. Spillage shall be removed from the annulus, or the shaft shall be declared deficient.

Temporary casing shall be clean, inside and out, prior to placement in the excavation. All casing shall be handled so as to limit distortion to plus or minus two percent (2%) of the diameter. No side shear capacity will be allowed where an installed temporary casing becomes permanent. If conditions permit, and if approved by the Engineer, temporary casings may be corrugated and non-watertight.

The Contractor shall be responsible to compensate for loss of frictional capacity in the cased zone if temporary casing is abandoned in the shaft. Such modifications shall be at no additional cost to the County.

502.3 CONSTRUCTION:

502.3.1 General: The construction methods and equipment used shall be suitable for the intended purpose and materials encountered. Construction shall be by either the dry method, wet method, temporary casing method or permanent casing method, as defined by the current AASHTO LRFD Bridge Construction Specifications with Interim revisions as applicable. Drilled shafts shall be sound, durable concrete foundation shafts free of defects, subject to approval of the Engineer. The permanent casing method shall be used only when required by the Project Plans and Special Provisions, or authorized by the Engineer.

(A) Installation Changes: If at any time during the construction of the drilled shafts, the Engineer determines that the equipment, materials, personnel, or procedures are such that defects in the work may occur, the Engineer may stop the work until appropriate changes are made by the Contractor. The Contractor shall also revise the Installation Plan, as approved by the Engineer. In no case shall the Contractor be relieved of responsibility for constructing acceptable Drilled Shaft Foundations.

(B) Adjacent Drilled Shafts: The successive installation of Adjacent Drilled Shafts shall not be allowed, to minimize any potential disturbance to newly cast drilled shafts. An Adjacent Drilled Shaft is defined as being any drilled shaft to be located within four (4) diameters of an installed shaft, measured center to center of shafts. Drilling for an Adjacent Drilled Shaft shall not be started within 48 hours of the completion of casting concrete for the installed drilled shaft, unless otherwise approved by the Engineer. The Contractor's sequence of shaft installation, detailed as required in Section 502.1.2(3), shall also conform to shaft sequence requirements called out on the Project Plans, unless otherwise approved by the Engineer in the Contractor's Installation Plan.

502.3.2 Confirmation Shafts: When called out on the Project Plans, or when required in the Contract Special Provisions, the Contractor shall construct a Confirmation Shaft. The Confirmation Shaft is constructed to determine the adequacy of the Contractor's equipment, materials, personnel, and procedures for completion of the Drilled Shaft Foundations, in accordance with the requirements of the Project Plans, these Specifications and the project Special Provisions, and the Installation Plan. The Confirmation Shaft normally will be the first production Drilled Shaft Foundation developed, subject to the approval of the Engineer.

The location of all Confirmation Shafts shall be as shown on the Project Plans, or as approved by the Engineer. All Confirmation Shaft holes and shaft installations shall be completed in the same manner as proposed for other similar production shafts. The Contractor shall revise drilled shaft installation methods and equipment, at any time during the installation of each Confirmation Shaft, as required. Such revisions may be made during the drilling of the Confirmation Shaft hole, and/or the placement of shaft reinforcement and concrete. Such revisions shall result in satisfactory installation of the Confirmation Shaft, COMPLETE IN PLACE, as approved by the Engineer.

When the Contractor fails to satisfactorily demonstrate the adequacy of his installation methods, procedures, or equipment; or when unforeseen conditions require revision, such as the need for slurry, the Installation Plan shall be revised. The next shaft to be constructed in accordance with the Contractor's approved installation sequence shall be designated as the Confirmation Shaft for the approved, revised Installation Plan, or the Confirmation Shaft shall be installed at a location approved by the Engineer.

When shown on the Project Plans, or when ordered by the Engineer in writing, the reaming of shaft bell footings or the development of shaft rock sockets at the specified Confirmation Shaft holes shall be required to establish installation feasibility in specific soil strata.

502.3.3 Excavation: The Contractor shall perform all excavation required for the shafts, rock sockets, and/or bell footings, through whatever materials encountered, to the dimensions and elevations shown on the Project Plans, or as approved by the Engineer. Unless otherwise shown on the Project Plans, the maximum deviation from plumb shall be not more than one and one-half percent (1 1/2%). The maximum permissible variation of the longitudinal center axis of both the shaft hole and reinforcing steel cage, from the Project Plan location at the top of the Drilled Shaft Foundation, shall be five percent (5%) of the Project Plan shaft diameter, not to exceed 3 inches. The Contractor shall determine shaft hole verticality by plumb lines in dry excavations, and by Kelly bar position readings at 10' intervals in wet excavations, or as approved by the Engineer. The Contractor shall provide the Engineer with these readings for each drilled shaft constructed, to verify verticality. When bell footings or rock sockets are required, they shall be excavated so as to form a bearing area of the size and shape shown on the Project Plans.

Temporary surface casings may be used to aid shaft location and alignment, and to prevent sloughing of the top of the shaft excavation, if approved by the Engineer.

If satisfactory foundation materials are not encountered when a shaft excavation has been advanced to the Bottom of Shaft Elevation shown on the Project Plans, the bottom of the drilled hole may be lowered, at the direction of the Engineer. Any lowering of the Bottom of Shaft Elevation will be based on the completed Drilled Shaft Foundation complying with foundation design requirements. Reinforcing steel and shaft concrete shall not be placed in the shaft excavation until the revised, final Bottom of Shaft Elevation has been established, and the shaft excavation completed. Similarly, the raising of any Bottom of

Shaft Elevation, from the elevation shown on the Project Plans, shall require approval by the Engineer.

When a Drilled Shaft Foundation includes a Rock Socket, the actual Bottom of Shaft Elevation in the field will be established by the shaft excavation encountering competent bedrock stratum, as determined by the Engineer or a geotechnical specialist. The required Rock Socket length will be verified by the Engineer, based on foundation design requirements. Reinforcing steel and shaft concrete shall not be placed until the Rock Socket length has been verified, and the drilled/cored socket completed.

If caving conditions are encountered, no further drilling will be allowed until a method of construction is employed that prevents excessive caving, and which is acceptable to the Engineer. If casing is proposed, the shell shall be clean and shall extend to the top of the drilled shaft excavation. The inside diameter of the casing shall be not less than the dimensioned size of the shaft on the Project Plans, unless approved by the Engineer. The outside diameter of the shaft shall not exceed the Project Plan dimension by more than 6 inches, unless the use of telescoping casing or surface casing is allowed by the installation plan.

If the Engineer determines that the amount of excavation caving is within acceptable limits and the Contractor elects to drill under the same methods and procedures, the shaft excavation shall be filled with concrete at no additional cost to the County, regardless of the extent. Any excavation beyond the dimensions shown on the plans where casings are not used shall be filled with concrete at no additional cost to the County.

If the use of drilling slurry is to be employed, either with or without the use of casing, the Contractor shall use a method of construction that allows completion of the drilled shaft in a continuous manner without any mixing between the shaft concrete and the drilling slurry.

Material excavated from drilled shafts, bell footings, and rock sockets, that is not placed elsewhere on the project, shall be disposed of as approved by the Engineer.

When the Project Plans indicate that Drilled Shaft Foundations are to be constructed within embankments, the embankments shall be constructed prior to drilling, except when approved otherwise by the Engineer.

After the completion of the drilled shaft excavation, and prior to the placement of the reinforcing steel cage and shaft concrete, all loose material shall be machine cleaned from the shaft. A flight auger or other equipment, approved by the Engineer, shall be used for cleaning dry excavations where slurry or ground water is not present. Where slurry or ground water is present, the excavation shall be cleaned with a clean-out bucket or similar type of equipment, as approved by the Engineer.

Each open shaft excavation shall be covered in a manner approved by the Engineer, at all times when there is no hole excavation activity and/or shaft construction activity at that hole.

Drilled shaft excavation inspections shall be performed by the Contractor and will be reviewed by the Engineer. The Contractor shall provide suitable facilities, equipment, and associated safety measures for required excavation inspections that enable the Engineer to safely and completely evaluate drilled shaft excavations for correct location, alignment, and dimensions.

Reinforcing steel cages and shaft concrete shall not be placed in the drilled shaft excavation until the Engineer has made an evaluation and given approval.

502.3.4 Drilling Slurry:

(A) General Requirements: The Contractor shall provide a specialist experienced in the slurry drilling process to design and monitor the slurry. The specialist shall be present at all times when the slurry method is used, and shall supervise the slurry inspection and testing required in Section 502-3.4(B). Commercially prepared mineral slurries shall be employed when slurry is used in the drilling process. Commercially prepared synthetic slurry may be used only when specifically approved by the Engineer. The mineral slurry shall have both a mineral grain size that will remain in suspension and sufficient viscosity and gel characteristics to transport excavated material to a suitable screening system. The percentage and specific gravity of the material used to make the suspension shall be sufficient to maintain the stability of the excavation and to allow proper concrete placement. During construction, the level of the mineral slurry in the shaft excavation shall be maintained at a level not less than 4 feet above the highest expected piezometric pressure head along the depth of the shaft. In the event of a sudden significant loss of slurry to the hole, the construction of that foundation shall be stopped, until either a method to stop slurry loss or an alternative construction procedure has been approved by the Engineer.

The mineral slurry shall be premixed thoroughly with clean, fresh water. Adequate time, as prescribed by the mineral manufacturer, shall be allotted for hydration prior to the introduction of the mineral slurry into the shaft excavation. Slurry tanks of adequate capacity shall be required for slurry circulation, storage, and treatment. No excavated slurry pits shall be allowed in lieu of slurry tanks. No mixing of slurry shall be allowed in the drilled shaft excavation. Slurry shall not stand for more than four hours in the shaft excavation without agitation. If this is not possible, excavation sidewalls shall be cleaned to remove filter cake, and the slurry tested for compliance with Table 502-3.4(A). Slurry density shall be increased by adding barite only when sodium bentonite is the slurry mineral.

Desanding equipment shall be provided by the Contractor as necessary to control slurry sand content within the acceptable values shown in Table 502-3.4(A) at any point in the bore hole. Desanding will not be required for setting casing. The Contractor shall take

all steps necessary to prevent the slurry from "setting up" in the shaft. Such methods may include agitation, circulation and/or adjusting the properties of the slurry. The Contractor shall dispose of all slurry off site at an approved disposal site.

TABLE 502-3.4(A):

TABLE (Sodium Bentonite or Attapulgite in Fresh Water)			**502-3.4(A)**
Property, units	Range of Values*		Test Method
	At Time of Introduction of Slurry	In Hole at Time of Concreting	
Density, (pcf)	64.3 - 69.1	64.3 – 75.0**	Density Balance
Yield Point, psf	Bentonite 0.026 – 0.21	10 Maximum	Rheometer
	Attapulgite 0.042 – 0.31	15 Maximum	Rheometer
Or			
Viscosity, seconds/quart	28 – 45	28 - 45	Marsh Cone
pH	8 – 11	8 – 11	pH Paper or pH Meter
Sand Content, % by volume	0 – 4	0 – 10	API Sand Content Kit
* Above 68 degrees F ** 85 pcf maximum when using Barite.			

(B) Slurry Inspection and Testing: The Contractor shall have suitable inspection and testing apparatus available at the site, including a sampling tool capable of extracting slurry samples at any depth within the drilled shaft excavations. All equipment required for tests specified in this Section shall be provided by the Contractor, and the tests shall be performed by the Contractor, under the observation of the Engineer.

Control tests using suitable apparatus shall be carried out by the Contractor on the mineral slurry to determine density, viscosity or yield point, pH, and sand content. A range of values for those physical properties is shown in Table 502-3.4(A); but in all cases, no less than the minimum values necessary to achieve and maintain stability of the drilled shaft excavation shall be used.

The Contractor shall do tests during the shaft excavation, in the presence of the Engineer, to determine slurry density, viscosity or yield point, and pH value, to establish a consistent working pattern. A minimum of four sets of tests shall be made during the first eight hours of slurry use. When the results show consistent behavior, the testing frequency may be decreased to one set every four hours of slurry use.

The Contractor shall ensure that heavily contaminated slurry suspension, which could impair the free flow of shaft concrete, has not accumulated in the bottom of the completed shaft excavation. Prior to placing concrete in the completed shaft excavation, the Contractor shall take slurry samples in the shaft excavation, from the base of the shaft excavation, and 10' (3.0m) above the base of the excavation. When any slurry samples are found to be unacceptable, the Contractor shall take whatever action is necessary to bring the mineral slurry within specification requirements. Shaft concrete shall not be placed until re-sampling and testing results produce acceptable values for density, viscosity or yield point, pH, and sand content.

Reports of all tests required above, signed by an authorized representative of the Contractor, shall be furnished to the Engineer on completion of each drilled shaft.

502.3.5 Integrity Testing: All drilled shaft foundations shall be constructed to allow integrity testing by gamma ray density logging and by cross-hole sonic logging survey. Unless otherwise noted, the Contractor shall provide integrity testing using gamma ray density logging for all drilled shaft foundations. The gamma ray density logging shall be conducted and results submitted for each drilled shaft no later than three days after placement of the drilled shaft concrete. In addition all drilled shafts 4' diameter and larger constructed in wet conditions shall be tested using cross-hole sonic logging. All tests using cross-hole sonic logging shall be conducted no later than six days after placement of the drilled shaft concrete. When inconclusive or bad results are obtained from the gamma ray density test, the Contractor shall conduct, at no additional cost to the County, cross-hole sonic logging within six days after placement of the drilled shaft concrete.

The Contractor shall furnish and install 2½", Schedule 80 PVC pipe for integrity testing. Each logging pipe shall be joined to provide a clean and unobstructed pipe opening from the top of the drilled shaft foundation to within one foot of each shaft tip or as shown on the Project Plans. All logging pipes shall be capped top and bottom. Logging pipes shall be tied to the inside of the reinforcing cages in a longitudinal straight line, located as detailed on the Project Plans. The logging pipes shall be securely fastened to the reinforcing steel cage, to ensure that the pipes remain straight after handling and shaft concrete placement, to permit the logging device to pass from top to bottom of pipe. PVC pipes shall be filled with water prior to concrete placement. The Contractor shall provide the testing equipment, perform the inspection, and furnish test results to the Engineer.

If the testing indicates the presence of voids, intrusions, or zones of unconsolidated concrete in the Drilled Shaft Foundation, or if the Engineer determines that construction defects may have occurred, or if testing cannot be performed because of blockage of the tubes, the Contractor shall core-drill or otherwise determine the extent of any defects in the concrete, as approved by the Engineer. The Contractor shall repair, replace, or supplement the defective work in a manner approved by the Engineer, at no additional cost to the County.

In case the above described testing methods provide inconclusive or deficient results and the situation is difficult or impossible to repair, the geotechnical engineer shall assess the

amount of loss to the drilled shaft safety factor*. Any drilled shaft with a safety factor less than 80% of the required value shall be replaced or repaired in a satisfactory manner at no additional cost to the County. Payment for drilled shafts with safety factor between 80% and 100% of the required value shall be reduced as indicated in Table 502-1.

Table 502-1 Payment Factors for Defective Drilled Shafts	
Percentage of required value of Safety Factor*	Percent of Payment
100% and above	100%
<100% to 96%	95%
<96% to 92%	90%
<92% to 88%	85%
<88% to 84%	80%
<84% to 80%	75%
<80%	Replacement Required

* Safety factor, as used in section 502, is the reciprocal of the combined resistivity factor weighted for side friction and tip bearing capacities. For resistivity factors see AASHTO LRFD Bridge Design Specifications, Section 10.

After all inspection and testing has been completed, all holes and test pipes in all Drilled Shaft Foundations shall be filled with a grout approved by the Engineer.

502.3.6 Reinforcing Steel, Cage Construction and Placement: The reinforcing steel cage for the drilled shaft, consisting of longitudinal bars and spiral reinforcement or lateral ties, shall be completely assembled and placed in the shaft excavation as a unit. The reinforcing steel cage shall not be installed in the shaft excavation until immediately before the placement of shaft concrete is to be started. The reinforcing steel cage shall be positioned in accordance with the details shown on the Project Plans.

All reinforcing cages shall be fabricated and supported to avoid damage during lifting and installing the cages. All temporary bracing and supports shall be removed from reinforcing cages prior to the final placement in the shaft excavation.

The reinforcing steel cage shall be adequately supported and anchored from the top, to prevent movement from the required location during the placement of shaft concrete, and for four hours after completion of concrete placement. The reinforcing cage shall not rest directly on the bottom of the excavation. Spacers shall be at sufficient intervals along the shaft to ensure concentric location of the reinforcing cage for the entire length of shaft. Only noncorrosive, rolling spacers approved by the Engineer shall be allowed. In no case shall "dobies" or other rectangular "blocks" tied to the reinforcing cage or sliding reinforcing bar spacers be allowed.

If the Bottom of Shaft Elevation of a Drilled Shaft Foundation, with or without a Rock Socket, is lowered in accordance with Section 502.3.3, and the Project Plans indicate full depth reinforcement, the Engineer shall be notified to determine if extension and/or modification of the reinforcing cage is required. The Engineer will provide details for

changes in the shaft reinforcing cage, if required. Such changes in the shaft reinforcing steel cage will be paid for in accordance with Sections 109.4 and 109.5 of the Specifications.

If the Bottom of Shaft Elevation of the Drilled Shaft Foundation, with or without a Rock Socket, is raised in accordance with Section 502.3.3, the Engineer will determine if modification of the reinforcing steel cage is required.

The Contractor shall submit a written request to the Engineer for approval of any variation from the reinforcing steel splices specified in the contract documents.

502.3.7 Concrete Placement:

(A) General: The Contractor shall begin placement of shaft concrete within 24 hours after the completion of the drilled shaft excavation. All concrete shall be placed in accordance with Section 505 and as specified herein. If slurry-assisted excavation is used, concrete shall be placed the same day the excavation is completed.

Unless otherwise specified in the project Special Provisions, or as requested by the Engineer, the slump shall be between 5 and 6 inches for dry, uncased excavations. For all other shaft excavations, with water and/or using slurry and/or casing during excavation, the shaft concrete slump shall be 8 ± 1 inches at the time shaft concrete placement begins.

Prior to shaft concrete placement, the Contractor shall make all necessary arrangements to ensure the uninterrupted delivery of concrete, so that all Drilled Shaft Foundations will be constructed without cold joints. During shaft concrete placement, from start to finish, the rate of rise of the top of concrete in the drilled shaft shall be at least 40’ / hour.

Tremie downpipes and pump pipes shall be made of steel; no aluminum shall be allowed. The inside diameter of the tremie pipe shall be at least 10 inches. The inside diameter of the pump pipe shall be at least 5 inches.

(B) Placement in Dry Excavations: For placement in dry excavations, shaft concrete may be placed by free fall, except in cohesionless soils or where other caving conditions exist. The Contractor shall place the shaft concrete so that during free fall, the concrete does not strike the reinforcing cage or the excavation sidewalls. Where free fall cannot be used, concrete shall be placed through a suitable, clean downpipe.

Vibration of the shaft concrete for the full height of the shaft is not required to achieve proper consolidation of the concrete. However, the shaft concrete shall be vibrated in the top 10’ of the shaft.

(C) Wet Conditions, Placement under Slurry or Water: Shaft concrete placed under slurry or water shall be placed by tremie methods or by pumping. Care shall be taken to

ensure that all the fluid and suspended solids are expelled from the shaft excavation during concrete placement.

Where shaft concrete is conveyed and placed by mechanically applied pressure, the equipment shall be of suitable type and shall have adequate capacity for the work. The concrete shall not flow over or through any piping, fittings or equipment which is fabricated of aluminum or aluminum alloys. The operation of the pump shall be such that a continuous stream of concrete without air pockets is produced. Excessive segregation due to high velocity discharge of the concrete will not be permitted. When pumping is completed, the concrete remaining in the pipeline, if it is to be used, shall be ejected in such a manner that there will be no contamination of the concrete or segregation of the ingredients. Standby equipment shall be readily available to replace initial pumping equipment should a breakdown occur.

The Contractor's Installation Plan shall demonstrate the procedures used to determine when the tremie pipe is to be raised during shaft concrete placement. The procedure shall ensure that the opening of the tremie pipe will be deeper than 5 feet below the surface of the concrete at all times, and that a void will not be created by lifting the tremie when there is an insufficient head of concrete. A rapid raising or lowering of the tremie will not be permitted.

To prevent contamination of the shaft concrete placed initially, the lower end of the pump or tremie pipe shall be provided with a valve, sealable cap, or plug ("pig"). The discharge end shall be placed at the bottom of the excavation prior to starting shaft concrete placement. If a plug is used, it shall be inserted at the top of the tremie pipe after the pipe has been set in place. Shaft concrete shall then be placed by pushing the plug ahead, with the plug separating the concrete from the drilling slurry/water. The bottom end of the tremie pipe shall not be lifted off the bottom of the shaft excavation until the pipe is completely filled with concrete. The first portion of the concrete flow that comes to the top of the shaft shall be displaced out of the shaft excavation until clean, fresh concrete is expelled.

Slurry ejected during shaft concrete placement may be reused provided that it is screened to remove gravel chips or other granular materials, and providing the slurry meets acceptance criteria. After use, slurry to be discarded shall be disposed of in a manner that complies with all applicable laws and requirements, including the National Pollutant Discharge Elimination System (NPDES) requirements.

Concrete placed under slurry or water shall not be vibrated, except that the top 5 feet of the shaft shall be vibrated after the slurry or water and contaminated concrete have been totally expelled from the shaft. If temporary casing is used, the vibration shall occur after the casing has been removed.

502.3.8 Casing Removal: During removal of any casing, a sufficient head of not less than 5 feet of fluid concrete in the tremie pipe shall be maintained above the level of concrete in the shaft (outside the tremie pipe), except at the top of the shaft. All

contaminated concrete shall be removed from the shaft. Temporary casings shall be removed while the concrete slump is not less than 4 inches. The Contractor shall maintain a minimum 5 foot head of concrete in the casing as it is being removed. Movement of the casing by exerting downward pressure and tapping to facilitate extraction, or extraction with a vibratory pile hammer will be permitted. Casing extraction shall be at a slow, uniform rate with the force in-line with the shaft axis.

Due care shall be exercised to prevent upward movement of the shaft concrete and reinforcing steel during casing extraction. Upward movement beyond one inch, excluding movement due solely to tension on the top anchoring system, may indicate serious concrete separation or necking problems at the bottom of the casing. The Contractor shall be responsible for corrective action which may include leaving the casing in place and compensating for the loss of frictional capacity in the resulting cased zone.

502.4 MEASUREMENT:

Drilled Shafts and accepted Confirmation Shafts will be measured to the nearest linear foot, from the top elevation of each completed Drilled Shaft Foundation to:

(A) The elevation of the surface of the rock stratum, when Rock Sockets are used, or
(B) The Bottom of Shaft Elevation shown on the Project Plans, or
(C) The elevation of the shaft-bell juncture, when Bell Footings are used,

or as determined in the field by the Engineer or a geotechnical specialist.

The length of Rock Sockets will be measured to the nearest linear 0.1 foot from the actual surface elevation of the rock socket bedrock stratum to the actual Bottom of Shaft Elevation, as shown on the Project Plans, or as determined in the field by the Engineer or a geotechnical specialist.

Bell Footings will be measured by the unit each, for each configuration of Bell Footing constructed.

502.5 PAYMENT:

The accepted quantities of Confirmation/Drilled Shafts and Rock Sockets, measured as provided above, will be paid for at the contract unit price COMPLETE IN PLACE for placement in Dry Excavations. The contract unit price shall include all excavation; drilling; metal casing; steel reinforcing; portland cement concrete; any needed forming, curing and finishing; exposing in-place shaft concrete and the subsequent repair of shaft foundations; furnishing all materials, equipment, and labor for splicing of reinforcing steel; conduit for integrity testing and integrity testing.

No additional payment will be made for metal casing that is to remain in place, or for temporary casing left in place.

No supplemental payment will be made for Confirmation Shafts; the cost of the confirmation process is considered as included in the overall cost of constructing production Drilled Shaft Foundations, including all Confirmation Shafts.

Bell Footings will be paid for at the contract unit price per each, for each configuration of Bell Footing constructed and accepted.

Payment for Obstructions will be made in accordance with the provisions of Section 109.4. Obstructions are defined as either material or objects of excessive dimensions that could not be reasonably inferred from the Geotechnical and Foundation Report, including the Foundation Boring Logs. Drilling tools lost in shaft excavations will not be considered Obstructions.

Drilled Shaft Wet Conditions Extra Cost (Contingency Item) is an additional payment made for each drilled shaft installed under wet conditions. This contingency payment will only be made with the approval of the Engineer when warranted by ground water intrusion into the drilled hole, which requires application of special wet drilling methods such as those that use slurry. This payment will be in addition to the contract unit price for Drilled Shafts and shall be full compensation for all additional work and materials required for installation of drilled shafts under wet conditions.

SECTION 505 CONCRETE STRUCTURES

505.1 DESCRIPTION, add the following:

505.1.2 Precast Concrete Structures – All precast concrete structures shall be manufactured in a plant with current certification by the Precast Concrete Institute (PCI), National Precast Concrete Association (NPCA) or American Concrete Pipe Association (ACPA)

505.1 DESCRIPTION, add the following:

505.1.3 Retaining Walls: Retaining walls shall be constructed in accordance with the details shown on the project plans. Concrete shall be Class A and of the compressive strength shown on the project plans. Rustication, color coating or other wall treatments shall be in accordance with the details shown on the project plans or as specified in the Special Provisions. Excavation and backfill shall be in accordance with the requirements of Section 206.

505.11 MEASUREMENT, add the following:

505.11.5 Retaining Walls: Retaining walls shall be measured by the square foot of wall constructed and will be measured along the front face of the wall from the top of footing

to the top of wall.

505.12 PAYMENT, add the following:

505.12.4 Retaining Walls: Payment for Retaining Walls will be made at the contract unit price per square foot. Payment shall be full compensation for all labor, materials, tools and equipment necessary to construct the retaining wall complete in place, including all excavation, concrete, reinforcing steel, rustication, color coating, geocomposite drain, footings, drains, items embedded in the concrete and backfill. No separate payment for excavation or backfill will be provided, the cost thereof shall be included in the bid price for the construction of the retaining wall.

SECTION 506

PRECAST PRESTRESSED CONCRETE MEMBERS

Section 506 is supplemented with the following:

506.1 DESCRIPTION:

Elastomeric Bearing Pads shall conform to the requirements of the current edition of the AASHTO LRFD Bridge Construction Specifications, Section 18.2, and shall be Grade 3, 60 durometer elastomer, unless otherwise specified in the Special Provisions.

Prestressing of all precast concrete I-girder, box beam, voided and solid slab bridge members shall be by the pretensioning method only.

Prior to initiating girder fabrication, shop drawings for the proposed precast concrete members shall be submitted in accordance with Section 105.2, and approved by the Engineer.

506.2 CONCRETE:

506.2.1 Reinforcing Steel: Non-prestressed reinforcement shall conform to the provisions of Section 727; placement shall conform to the provisions of Section 505.5.

506.2.2 Dimensional Tolerances: Precast Prestressed Concrete Bridge Members that do not comply with the dimensional tolerances specified herein will be rejected. Precast members that show evidence of cracks, pop-outs, voids or other evidence of structural inadequacy, or imperfections that will reduce the aesthetics of the member after final placement, will be rejected.

(1) Precast Prestressed Concrete I-girders: The maximum allowable tolerances or deviations from dimensions and details shown on the project plans and shop drawings shall be as follows:

Girder Length	± 3/4”
Width (flanges and fillets)	+ 3/8”, -1/4”
Girder Depth (overall)	+1/2”, -1/4”
Width (web)	+ 3/8”, -1/4”
Depth (flanges and fillets)	± 1/4”
Bearing plates (center to center)	±1/8” per 10 feet but not greater than ±3/4”
Horizontal alignment (deviation from straight line parallel to centerline of girder)	1/8” per every 10 feet in length
Stirrup bars (deviation from top of girder)	+ 1/4”, - 3/4”
Position of strands	± 1/4” for strands and center of gravity of strand group
Longitudinal position of deflection points for deflected strands	± 10”
Position of handling devices	± 6”
Bearing plates (center to end of girder)	± 1/4”
Side inserts (center to center and center to end of girder)	± 1/2”
Girder ends (deviation from square or designated skew)	Horz. ± 1/4” Vert. ± 1/8” per 12 foot of beam depth
Bearing area deviation from plane	± 1/8”
Stirrup bars (longitudinal spacing)	± 1”
Position of weld plates	± 1”

(2) Precast Prestressed Concrete Box Beams, Voided Slabs, and Flat Slabs: The maximum allowable tolerances or deviations from dimensions and details shown on the project plans and shop drawings shall be:

Member Length	± 3/4”
Member Width (overall)	± 1/4”
Member Depth (overall)	± 1/4”
Width (web)	± 3/8”
Depth (top slab)	± 1/4”
Depth (bottom slab)	+ 1/4”, -1/8”
Horizontal alignment (deviation from straight line parallel to centerline of member)	1/8” per every 10 feet in length
Camber differential between adjacent members	Not greater than 3/4”
Position of strands	± 1/4” for center of gravity for strand group
Stirrup bars (longitudinal spacing)	± 1”
Position of handling devices	± 6”
Member void position	± 1/2” from end of void to center of tie hole, + 1” adjacent to end block.
Member ends (deviation from square and/or designated skew)	± 1/2”
Bearing area deviation from plane (straight edge through middle half)	± 1/8”
Dowel tubes (spacing between centers of tubes, and centers of tubes to the ends and sides of members)	± 1/2”
Tie rod tubes (spacing between centers of tubes, and centers of tubes to ends of members)	± 1/2”
Tie rod tubes (spacing from centers of tubes to bottom of member)	± 3/8”
Position of side inserts	± 1/2”

506.3 PRESTRESSING STEEL:

Prestressing Steel Strand for precast concrete bridge members shall conform to the requirements of AASHTO Specification M 203 (ASTM A416) for Steel Strand, Uncoated Seven-Wire for Concrete Reinforcement, and shall be Low-Relaxation Strand, Grade 270.

506.6 PRESTRESSING:

Unless otherwise shown on the project plans, the stresses in the prestressing strands shall not exceed those specified in the current edition of the AASHTO LRFD Bridge Construction Specifications, Section 10.10.

When concrete has not been placed within 72 hours of the tensioning of the prestressing strands, all strands shall be re-tensioned prior to placing concrete.

Prestressing steel at the end of the members shall be cut and bent in accordance with details on the project plans. Exposed strand ends shall not be coated, but shall be clean and free of all rust, corrosion, dirt, scale, oil, grease, and other deleterious substances, in accordance with Sections 506.3 and 506.7 of these Specifications, before encasement in the cast-in-place concrete pier and abutment diaphragms of the superstructure.

506.8 SAMPLES FOR TESTING:

Sampling and testing of prestressing strand for bridge members shall conform to the specifications of AASHTO M 203.

506.9 HANDLING:

Precast prestressed concrete bridge members shall not be transported from the fabricating yard to the bridge site until attaining full design compressive strength, and not less than seven (7) days after the total transfer of prestressing force.

506.10 PAYMENT:

A partial payment administered in accordance with the provisions of Section 109.7(A), will be allowed for stockpiled precast prestressed concrete bridge members that have been approved by the Engineer for conformance with the project plans and these specifications. The partial payment shall not exceed eighty percent of the contract complete in place unit price,

An adjustment in the contract unit price, to the nearest cent, will be made for precast prestressed concrete bridge members having cylinder strength test results less than the specified 28-day compressive strength. Strength tests will be conducted in accordance with Section 725.8. The adjustment in contract unit price, if the precast prestressed concrete bridge member is accepted, will be based on the schedule in Section 725.8.3 Table 725-2 using values for Class AA and Class A.

Part 500 add the following new Section:

SECTION 508

CATTLE GUARD

508.1 DESCRIPTION:

This work shall consist of furnishing all materials and labor to construct new cattle guards at the locations shown on the plans.

508.2 MATERIALS & CONSTRUCTION: Materials and construction requirements shall be in accordance with Section 906 Cattle Guards of the current Arizona Department of Transportation (ADOT) Standard Specifications for Road and Bridge Construction and the referenced ADOT Standard Drawing.

508.2.1 Beam Design: Cattle guards shall be constructed using beams designed for HS-20 or heavier loading.

508.2.2 Precast Units: Precast units may be used when fabricated in accordance with shop drawings approved by MCDOT. The precast option shall incorporate a proactive design acceptable to the County to ensure the gap space between adjacent grill units will be limited to 1/4 - inch plus or minus 1/16 - inch.

508.3 MEASUREMENT:

Cattle guards shall be measured as complete units in place for each size structure constructed. The size of cattle guards shall be noted by the number of grill units used in the installation.

508.4 PAYMENT:

Payment for cattle guards constructed and accepted will be made at the contract unit price for each structure, complete in place.

SECTION 601

TRENCH EXCAVATION, BACKFILLING AND COMPACTION

601.1 DESCRIPTION, add the following:

Backfill around manholes and junction structures shall comply with requirements of Section 206.4 Structural Backfill.

The work covered by this specification includes the backfilling of utility potholes.

601.4.5 Final Backfill, add the following:

Trenches within existing paved areas, roadway shoulders, and the travelled way of unpaved roadways shall use ½-sack CLSM or 1-sack CLSM for backfill unless use of an alternative material has received prior approval. Utility potholes in existing paved areas or within two feet of pavement shall use ½-sack CLSM or 1-sack CLSM for backfill unless use of an alternative material has received prior approval.

Requests for the use of alternative materials shall include project information such as trench width, trench depth, backfill material source, properties of the proposed backfill material, proposed backfill procedures, and proposed testing.

For trenches and utility potholes within paved areas the CLSM backfill shall extend from twelve inches (12”) above the top most conduit to the bottom of the aggregate base as defined for Trench Repair of MAG Detail 200. For trenches and utility potholes within unpaved areas the CLSM backfill shall extend from twelve inches (12”) above the top most conduit to six (6) inches below the finished grade, material for the top six (6) inches shall match the existing surfacing.

Add the following new section:
601.4.12 Embedment Zone Material Requirements for HDPE Pipe: Controlled low strength material (CLSM) shall be used within the pipe embedment zone for HDPE pipe. The CLSM shall be ½-sack or 1-sack per Section 728. Placement of the CLSM shall be per Section 604 and extend from the trench foundation to 12 inches above the pipe crown.

Add the following new section:
601.4.13 Allowable Resistivity and pH Values for Material Placed within the Pipe Embedment Zone and Backfill: Material placed within the pipe embedment zone and final backfill area for pipes, pipe-arches, or arches made of metal shall have a value of resistivity not less than 2000 ohm-cm or of the value shown on the project Plans. When resistivity is not shown on the Plans, the material shall have a value of resistivity not less than that of the existing in-place material or 2000 ohm-cm, whichever is greater. Material for all metal pipe installations shall have a pH value between 6.0 and 9.0 inclusive. Material for all concrete or plastic pipe installations shall have a pH value between 6.0

and 12.0. Tests for pH and resistivity shall be in accordance with the requirements of Arizona Test Method 236.

Part 600 add the following new Section:

SECTION 635

CONCRETE LINED IRRIGATION DITCH

635.1 DESCRIPTION:

Work under this Section consists of constructing cast-in-place Concrete Lined Ditch (CLD) having a bottom width of three feet or less.

635.2 MATERIALS:

Concrete shall be air-entrained Class B portland cement concrete conforming to the requirements of Section 725. All other materials incorporated in the CLD installation shall conform to the project plans and Special Provisions.

635.3 CONSTRUCTION:

Subgrade for the concrete ditch shall be shaped to conform to the elevations and dimensions shown on the project plans. The subgrade shall be compacted to a minimum of 85% of maximum dry density in accordance with the requirements of Section 301.3.

The CLD shall be slip-formed, or cast as approved by the Engineer. Concrete construction shall conform to the details shown on the project plans and the applicable provisions of Section 505.

The finished surface of the concrete shall be free from rock pockets and surface voids, and shall be comparable to the finish obtained by the use of a long-handled steel trowel, as approved by the Engineer. Transverse grooves 1/8 inch in width and 5/8 inch in depth shall be made in the placed concrete lining at intervals of 10 feet, and maintained to the required dimensions until the concrete has set.

The placed concrete shall be cured by the use of a white pigmented membrane-forming compound (AASHTO M-148 Type 2) conforming to the requirements of Section 726.

635.4 MEASUREMENT:

Measurement for this work will be by the linear foot of Concrete Lined Ditch.

635.5 PAYMENT:

Payment for this work shall be made at the contract unit price for Concrete Lined Ditch. Such payment will be full compensation for the item, complete in place, including all necessary materials, excavation, subgrade preparation, concrete, labor, and equipment.

SECTION 702

BASE MATERIALS

702.1 GENERAL, add the following:

Except for roads that are classified as minor collector or local roads, the base material shall not contain reclaimed materials such as RCM or RAP unless specified by the project plans or special provisions.

SECTION 710

ASPHALT CONCRETE

710.2 MATERIAL:

710.2.3 Reclaimed Asphalt Pavement (RAP), Replace the third paragraph with the following**:**

RAP shall not exceed 20% contribution of the aggregate or binder in the base or intermediate courses of arterial streets. RAP shall not exceed 30% contribution of the aggregate or binder in the base or intermediate courses of collector streets. RAP shall not be used in the surface course for all roadway classifications.

710.3 MIX DESIGN REQUIREMENTS:

710.3.1 General, add the following sentence to Item (6):

For Gyratory Mix design, the report shall state the traffic condition.

710.3.1 General, add the following:

710.3.1.1 Verification Testing: The Engineer may conduct tests to verify the laboratory air voids using the submitted target binder content and design gradation. If the resulting air voids is outside the required range, the Contractor shall make adjustments on the binder content to gain compliance with the air voids requirement. The Contractor shall

make available samples of the proposed aggregate and binder to conduct verification testing by the Engineer.

710.3.2 Mix Design Criteria

710.3.2.2 Gyratory Mix Design, add the following:

Gyratory Mixes are to be designed for low or high traffic conditions. Low traffic volumes and/or light weight vehicles represent low traffic conditions as found on residential streets, most parking lots, and residential minor collector streets. High traffic volumes and/or heavy weight vehicles represent high traffic conditions as found on major collector, arterial, and commercial/industrial streets.

710.3.2.2 Gyratory Mix Design, Replace Table 710-4 and Table 710-5 with the following:

TABLE 710-4		
Notation	**Number of Gyrations**	
	Low Traffic	**High Traffic**
N_{ini}	7	8
N_{des}	75	100
N_{max}*	115	160
* Volumetric data for 115 gyrations (i.e. N_{max} for Low Traffic designs) is back calculated from the specimens compacted to 160 gyrations.		

TABLE 710-5				
GYRATORY MIX DESIGN CRITERIA				
Criteria	Designated Test Method	Requirements		
		3/8″ Mix	1/2″ Mix	3/4″ Mix
Voids in Mineral Aggregate: %, Min.	AI SP-2	15.0	14.0	13.0
Effective Voids: %, Range	AI SP-2	4.0±0.2	4.0±0.2	4.0±0.2
Absorbed Asphalt: %, Range *	AI SP-2	0–1.0	0–1.0	0–1.0
Dust to Eff. Asphalt Ratio: Range **	AI SP-2	0.6–1.4	0.6–1.4	0.6–1.4
Tensile Strength Ratio: %, Min.	ASTM D 4867	75	75	75
Dry Tensile Strength: psi, Min.	ASTM D 4867	75	75	75
Mineral Aggregate Grading Limits	AASHTO T-27			
	Percent Passing with Admix			
	Sieve Size	3/8” Mix	1/2” Mix	3/4” Mix
	1 inch			100
	3/4 inch		100	90 - 100
	1/2 inch	100	90 - 100	43 - 89
	3/8 inch	90 - 100	53 - 89	--
	No. 4	--	--	30 - 47
	No. 8	32 - 47	29 - 37	24 - 36
	No. 40	2 - 24	3 - 20	3 - 18
	No. 200	2.0 - 8.0	2.0 - 7.5	2.0 - 6.5

* Unless otherwise approved by the Engineer.
** The ratio of the mix design composite gradation target for the No. 200 sieve, including admixture, to the effective asphalt content shall be within the indicated range.

SECTION 717

ASPHALT-RUBBER ASPHALT CONCRETE

717.2 MATERIALS

717.2.1 Asphalt-Rubber Binder (ARB)

717.2.1.3 ARB Proportions and Properties, add the following:

The maximum crumb rubber content in ARB shall be 24 percent by weight of total binder.

717.3 MIX DESIGN REQUIREMENT:

717.3.2 Mix Design Criteria, add the following:
The Engineer may conduct tests to verify the laboratory air voids using the target binder content and design gradation. If the resulting air voids is outside the required range, the binder content shall be adjusted to gain compliance with the air voids requirement. Samples of the proposed aggregate and binder shall be made available for verification testing by the Engineer.

SECTION 718

PRESERVATIVE SEAL FOR ASPHALT CONCRETE

718.1 GENERAL, add the following**:**

TYPE 5 - Tire rubber modified surface sealer (TRMSS) or equal not diluted, and applied at a rate of 0.10 to 0.20 gallons per square yard.

718.2 TEST METHODS AND REQUIREMENTS PRESERVATIVE SEAL, add the following:

Preservative seal for asphalt concrete material, shall meet Type 5 on Table 718-1 by certification from the manufacturer.

TABLE 718-1, add the following		
PRESERVATIVE SEAL SPECIFICATIONS		
Properties	**Method**	**Type-5**
Saybolt Viscosity @77°F (sfs)	ASTM D244	200-2000 Cp (Note 1)
Sieve test %	ASTM D244	0.1 max
Test on residue by:		**ASTM D244 Evaporation To 138°C**
Residue Content, %	ASTM D244	30 min
Flash point (Note 2) °F	ASTM D92	450°F
Softening point, °F	ASTM D5	140 min.

Notes:

1. Brookfield viscosity using spindle #27 (ASTM D4402) test temperature at 140°F.Ttemperatures equilibrate the sample for a minimum of 20 minutes. Sample test run time a minimum of 5 minutes. Sample will be in the Brookfield viscosity tube a minimum five minutes.
2. Flash point on residue may be waived by the engineer during production sampling and testing provided manufacturer submits results performed in the previous 12 months in compliance.

SECTION 725

PORTLAND CEMENT CONCRETE

725.8 TESTS AND TEST METHODS:

725.8.2 Concrete Cylinder Test, add following:

A cylinder strength test for concrete with a design strength of 4,000 psi or higher shall be the average of the strengths of at least two 6 inch by 12 inch cylinders or at least three 4 inch by 8 inch cylinders made from the same sample of concrete and tested at 28 days.

SECTION 728

CONTROLLED LOW STRENGTH MATERIAL

728.4 MIXING, add the following:

The project identification used to obtain the Engineer's pre-approval for dry batched unmixed CLSM shall be on the batch weight records.

SECTION 738

HIGH DENSITY POLYETHYLENE PIPE & FITTINGS FOR STORM DRAIN & SANITARY SEWER

Section 738.1 is modified as follows:

HDPE pipe size shall be limited to sizes 8-inch through 60-inch diameter. Sizes greater than 60-inch diameter shall not be used within Maricopa County rights-of-way without specific written approval from MCDOT.

SECTION 740

POLYPROPYLENE PIPE & FITTINGS FOR STORM DRAIN, IRRIGATION & SANITARY SEWER

Polypropylene pipe (PP) shall not be used within Maricopa County rights-of-way without specific written approval from MCDOT.

SECTION 771

GALVANIZING

771.4 REPAIR OF GALVANIZED SURFACES, replace with the following:

Unless otherwise specified, where galvanized surfaces are field or shop cut, broken, burned, or abraded, thus breaking the galvanizing, the locations thus damaged shall be repaired to the satisfaction of the Engineer with zinc dust-zinc oxide coating conforming to the Repair of Damaged Coatings section of AASHTO M-36.

MARICOPA COUNTY

SUPPLEMENT

TO THE

MAG STANDARD DETAILS

Maricopa County
Department of Transportation
2901 W. Durango Street
Phoenix, AZ 85009

Maricopa County Standard Details

Restricted MAG Details – Not for general use in MCDOT Right-of-Way.

225 INTERLOCKING CONCRETE PAVERS – Concrete pavers are not allowed within roadway pavement areas subject to vehicle traffic. They may be used for driveways or within raised medians.

236-5 25'-35' R - RADIAL PARALLEL CURB RAMP – Not allowed except for retrofit purposes; use requires special approval from MCDOT.

237-1, 237-2, and 237-3 DIRECTIONAL CURB RAMP (various radii) – Use MCDOT Radial curb ramp details.

238-3 PARALLEL CURB RAMP – Parallel Curb Ramps are not allowed except for retrofit purposes, use requires special approval from MCDOT.

250-1 &250-1 – DRIVEWAY ENTRANCES Use MCDOT Details 2050-1 & 2050-2

251 RETURN TYPE DRIVEWAYS – Use MCDOT Details 2036-1 and 2036-2. Use is limited to industrial and commercial driveways, not to be used for residential driveways.

501-1 & 501-2 HEADWALL - Not allowed; use requires special approval from MCDOT

533 CATCH BASIN TYPE D

Number	Description
2010-1	Residential Speed Hump Without Curb and Gutter
2010-2	Residential Speed Hump With Curb and Gutter
2010-3	Speed Hump Extension
2011	Residential Speed Cushion without Curb and Gutter
2013	Milling for Overlay
2014-1	Milling for Overlay Without Curb Type I Termination
2014-2	Milling for Overlay Without Curb Type II Termination
2014-3	Milling for Overlay Without Curb Type III Termination
2022	Retrofit 20' Return w/Dual Combination Curb Ramps
2023	Retrofit 20'-25' Return w/ Single Combination Curb Ramp
2024	DELETED – Replace with MAG Detail 238-4
2030-A	Sidewalk Ramp Retrofit – Method A
2031	Radial Curb Ramps for 30' & 35' Curb Returns (2 pages)
2032	Radial Curb Ramps for Residential Intersections
2033	Single Radial Curb Ramp at Sidewalk Transition
2035	DELETED: – Replaced by MAG Detail 251, see above restrictions.
2036-1	Return Type Driveways with Detached Sidewalk
2036-2	Return Type Driveways with Attached Sidewalk
2050-1	Driveway Entrances with Detached Sidewalk
2050-2	Driveway Entrances with Attached Sidewalk
2054	Street Name Sign Layout and Installation Details (4 pages)
2055	Barricade (Portable)
2057	Permanent Road Closure Using Type III Barricades (4 pages)
2058	Square Perforated Tube Sign Post Foundation & Splice Details

Number	Description
2059	U-Channel Post Selection and Installation Details
2060	Offsets, Clearances and Mounting Details for Signs on County Roadways (2 pages)
2061	Sign Blanks – Layouts (23 pages)
2062	Street Sign – Post Caps and Brackets (6 pages)
2066	Mailbox Installation
2067	Mailbox Installation Hardware
2069	Recommended Mailbox Clearances at Intersections
2070	Typical Mailbox Turnout
2801	W-Beam Guard Rail G4(1W) and G4 (2W) Blocked Out Timber Post
2802	28” High Strong Post W-Beam Guardrail Installation
2803	W-Beam Guardrail G4 (1S) Blocked Out Steel Post
2805	Guardrail: Tangent W-Beam Terminal Layout with Curb and Gutter
2806	Guardrail: Tangent W-Beam Terminal Layout without Curb and Gutter
2807	Departure End Terminal
2808-1	Nested Guardrail Type 1
2808-2	Nested Guardrail Type 2
2808-3	Nested Guardrail Type 3
2812-1	Thrie Beam Guardrail Transition
2812-2	Bridge Barrier Transition
2812-3	Barrier Details
2816	28” High Strong Post W-Beam Guardrail Measurement
3004	Guardrail Post Installation for Concrete Paved Areas
3009	Guardrail Transition 31” to 28”
3010	Bolted Guardrail Anchors (2 pages)
3016	DELETED Guardrail Measurement - REVISED To Detail 2816 & 3116
3100	Wood BCT & CRT Posts, Foundation Tube
3101	Midwest Guardrail System Blocked out Timber Post
3102	MGS Guardrail Installation
3103	MGS Blocked Out Steel Post
3105	MGS Tangential Terminal Layout with Curb & Gutter
3106	MGS Tangent W-Beam Terminal Layout without Curb & Gutter
3107	MGS Guardrail – End Terminal Layout
3108	MGS Long-Span
3116	31” Midwest Guardrail System Guardrail Measurement
4701	Traffic Signal Symbols (2 pages)
4711	Traffic Signal Pull Box Detail
4712	Traffic Signal Pull Box Extension
4713	Typical Traffic Signal Pull Box Installation
4716	Typical Traffic Signal Pull Box and Conduit Run Layout
4717	ITS Interconnect Conduit and Pull Box Layout
4720	Signal Pole Foundation (Pole Types A, E, F & PB)
4721	Signal Pole Foundations (Pole Types J, Q, K & R)
4723	'P' Cabinet Foundation
4724	Combination Service Pedestal and Battery Backup Foundation Detail

Number	Description
4725	Anchor Bolt with Hook
4726	Anchor Bolt with Plate
4730-1	P - 44 Cabinet
4730-2	R – 77 Cabinet
4731-1	'SP' Electrical Service Pedestal & ‘BBS’ Battery Backup System Cabinet
4731-2	Service Pedestal and Battery Backup Wiring Schematic
4735	Controller Cabinet Wiring Schematic
4737	Luminaire Circuit
4738	Type 'A' Pole
4739-1	Pole Lower Hand Hole Details
4739-2	Pole Upper Hand Hole Detail
4740	Type 'E' Pole
4741-1	Type 'F' Pole
4741-2	‘E’ & ‘F’ Pole Details
4742	Type 'J' Pole
4743	Type 'Q' Pole
4744	‘J’ & ‘Q’ Pole Details
4748	Type 'K' Pole
4749-1	Type 'R' Pole
4749-2	‘K’ & ‘R’ Pole Details
4750	Type ‘PB’ Pole
4755	Video Detection Camera Installation
4757	Loop Installation Details
4758	Conduit Stub-Out Detail Without Curb & Gutter
4759	Conduit Stub-Out Detail With Curb & Gutter
4773	Standard Signal Faces
4774	Signal Head Visor
4775	Side Mount (Type XI) Assembly (Vehicle & Pedestrian)
4778-1	Mast Arm Signal Head Mount (Type II)
4778-2	Elevator Plumbizer Detail
4780-1	Metro Street Sign Layout Sheet Installation on Signal Poles
4780-2	Metro Street Sign Layout and Installation on Traffic Signal Poles
4780-3	DELETED Metro Street Sign Clamp – See MCDOT Approved Materials List
4780-4	Metro Street Name Sign Mounted on Type “J” or “K” Signal Poles
4780-5	DELETED Oversized Metro Street Name Sign Mounting to Signal Pole Details
4785	Pole Plate
4788	Elbow
4789	Tee
4791	Ornamental Cap
4792	DELETED - Side Mounted Terminal Compartment
4793	DELETED - Terminal Compartment Cover
4794	DELETED - Type V Mounting Assembly
4795	DELETED - Type VII Mounting Assembly

Number	Description
4797-1	Type PB Pedestrian Push-Button Mount
4797-2	Pedestrian Push-Button Housing
4797-3	Pedestrian Push-Button Adapter Plate
4797-4	Audible Pedestrian Push Button Station
4798	Underground Combination Power Service / Battery Backup System Layout
4799-1	Color Code - 2, 4 and 7 Conductor Cable
4799-2	Color Code - 20 Conductor Cable
4801	Typical ITS PVC Conduit Installation
4805-1	ITS Fiber Optic Pull Box Type A
4805-2	ITS Fiber Optic Pull Box Type B
4805-3	ITS Fiber Optic Pull Box Type C
4805-4	ITS Fiber Optic Pull Box Type D
4806-1	ITS Fiber Optic Pull Box Type E
4806-2	ITS Fiber Optic Type E Pull Box Cover Assembly
4810	ITS Conduit and ITS Type A Pull Box Installation
4811	ITS Conduit and Type B, C, D & E Pull Box Installation
4821	Fiber Optic Cable Installed in Type B, C, D & E Pull Box
4825-1	ITS Pedestal Post Top Mounting (G-1)
4825-2	ITS Square Base (‘SB’) Pole Foundation Detail
4825-3	ITS Square Base ‘SB’ Pedestal
4825-4	ITS Type ‘SB’ Pole
4825-5	ITS Pedestal Pole Top Mounting Adapter
4825-6	ITS Type ‘G’ Cabinet
4827	ITS Post Side Mount (G-2)
4829-1	Service Pedestal
4829-2	Service Pedestal Foundation
4829-3	Service Pedestal Wiring Schematic
4830	CCTV Camera Installation on Signal Pole
4831-1	ITS CCTV Camera Panel Location
4831-2	ITS CCTV Camera Panel Details
4831-3	CCTV Camera Wiring Schematic
4833	Multiservice Radio Installation on Signal Pole
4835	4”X4” Post with Conduit for T1 Demarcation Point
5524-1	Headwall
5524-2	Headwall (Multi Pipe)
5560-1	Channel Lining
5560-2	Channel Lining (Details)

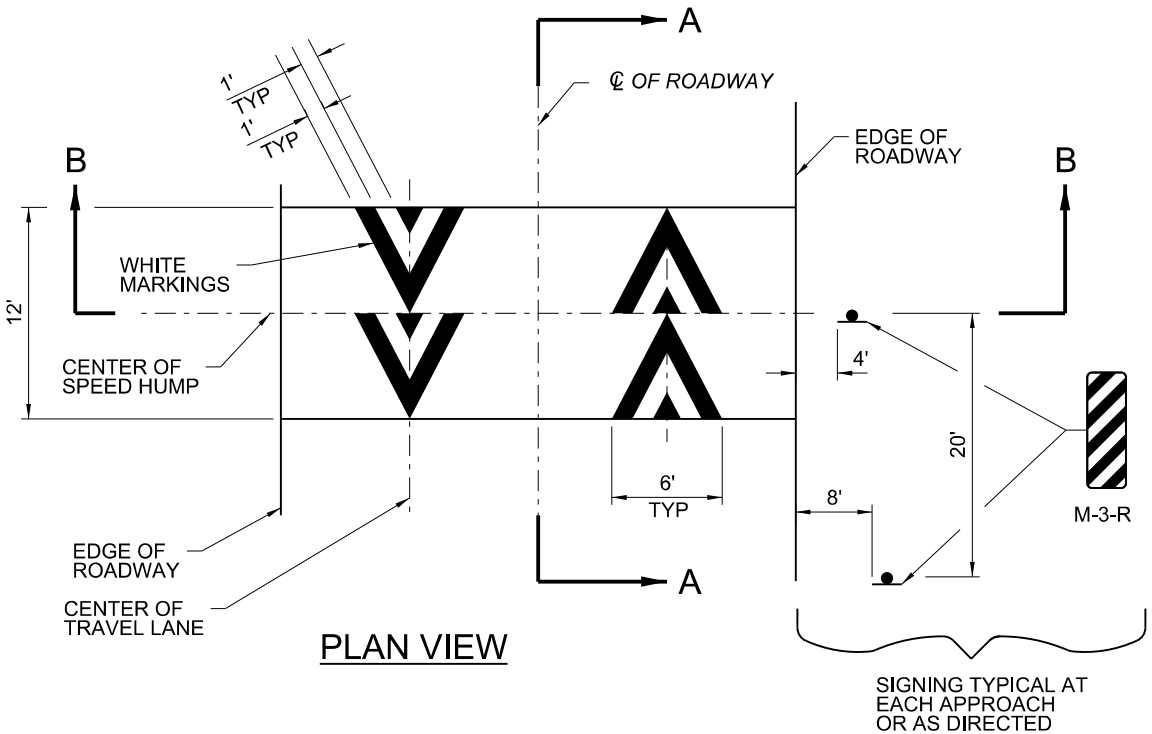

PLAN VIEW

NOTES:

1. SECTION A-A FINISHED SURFACE DIMENSIONS ARE DISTANCES FROM THE SURFACE OF THE EXISTING ROADWAY. THE CONSTRUCTION TOLERANCE FOR THESE CROSS SECTION DIMENSIONS IS ± 0.25 INCHES.
2. SPEED HUMPS THAT DO NOT COMPLY WITH CONSTRUCTION TOLERANCES SHALL BE REMOVED AND REPLACED AT CONTRACTOR'S EXPENSE.
3. THE CONTRACTOR SHALL WARRANT THAT THE MID-POINT HEIGHT TO BE AT LEAST 3 INCHES FOR 24 MONTHS. IF THE SPEED HUMP HEIGHT IS LESS THAN 3 INCHES AT THE 24 MONTH WARRANTY REVIEW, THE SPEED HUMP SHALL BE REPLACED AT THE CONTRACTOR'S EXPENSE.
4. SPEED HUMPS SHALL NOT BE PLACED OVER MANHOLES, VALVE BOXES, SURVEY MONUMENTS, ETC. OR AT DRIVEWAYS.
5. SPEED HUMPS SHALL ONLY BE PLACED AT LOCATIONS APPROVED BY MCDOT.
6. SPEED HUMPS SHALL BE CONSTRUCTED WITH 1/2" MARSHALL MIX FOR HIGH TRAFFIC. COMPACTION SHALL BE PER SECTION 321. TACK COAT PER SECTION 713 SHALL BE APPLIED PRIOR TO PAVING.
7. STRIPING WILL BE (2) COATS OF WHITE PAINT WITH GLASS BEADS.
8. TRANSVERSE EDGE JOINTS (ACROSS ROADWAY)
   A. FOR EXISTING ASPHALT PAVEMENTS EQUAL TO OR GREATER THAN 2 INCHES IN THICKNESS: SAWCUT AND REMOVE A 24 INCH WIDTH AT THE MATCHING SPEED HUMP EDGE. REPLACE THE FULL DEPTH OF REMOVED ASPHALT WITH SPEED HUMP ASPHALT AS A SINGLE OPERATION DURING CONSTRUCTION OF THE SPEED HUMP.
   B. FOR EXISTING ASPHALT PAVEMENTS LESS THAN 2 INCHES IN THICKNESS: REMOVE PAVEMENT AND SUBGRADE TO A MINIMUM DEPTH OF 2 INCHES. INSTALL NEW ASPHALT BASE PAD FOR THE SPEED HUMP.

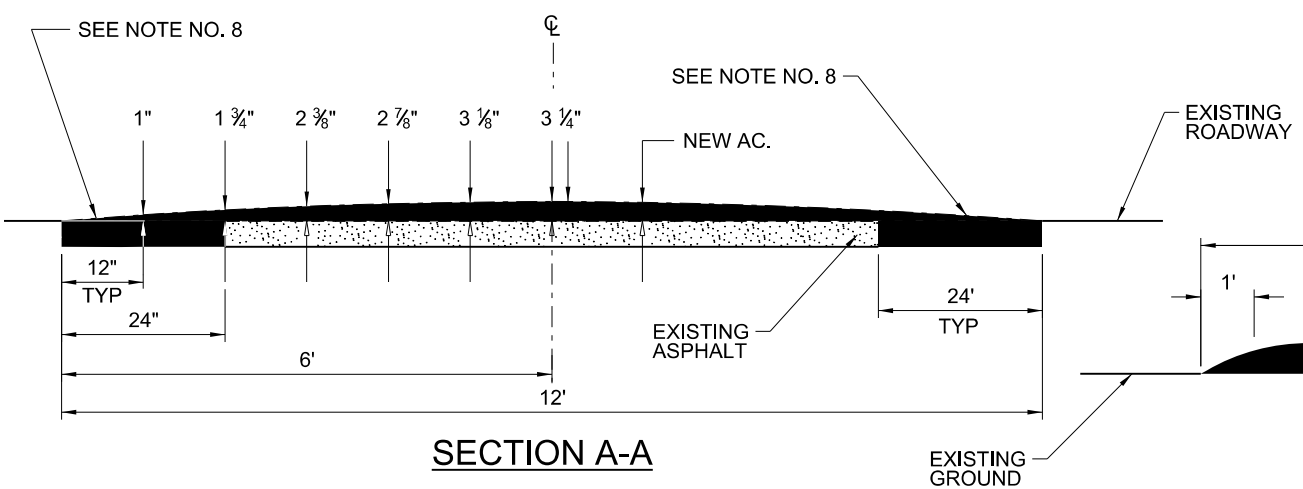

SECTION A-A

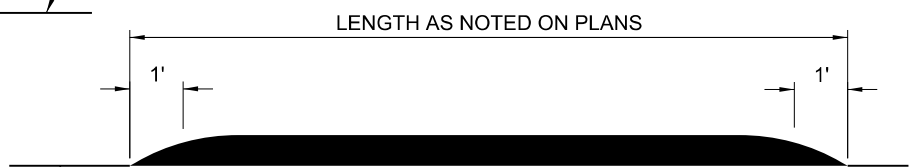

SECTION B-B

MARICOPA COUNTY DEPARTMENT OF TRANSPORTATION	RESIDENTIAL SPEED HUMP WITHOUT CURB AND GUTTER	DATE:	DETAIL NO.
STANDARD DETAIL		10/2014	2010-1

NOTES:

1. SECTION A-A FINISHED SURFACE DIMENSIONS ARE DISTANCES FROM THE SURFACE OF THE EXISTING ROADWAY. THE CONSTRUCTION TOLERANCE FOR THESE CROSS SECTION DIMENSIONS IS ± 0.25 INCHES.
2. SPEED HUMPS THAT DO NOT COMPLY WITH CONSTRUCTION TOLERANCES SHALL BE REMOVED AND REPLACED AT CONTRACTOR'S EXPENSE.
3. THE CONTRACTOR SHALL WARRANT THAT THE MID-POINT HEIGHT TO BE AT LEAST 3 INCHES FOR 24 MONTHS. IF THE SPEED HUMP HEIGHT IS LESS THAN 3 INCHES AT THE 24 MONTH WARRANTY REVIEW, THE SPEED HUMP SHALL BE REPLACED AT THE CONTRACTOR'S EXPENSE.
4. SPEED HUMPS SHALL NOT BE PLACED OVER MANHOLES, VALVE BOXES, SURVEY MONUMENTS, ETC. OR AT DRIVEWAYS.
5. SPEED HUMPS SHALL ONLY BE PLACED AT LOCATIONS APPROVED BY MCDOT.
6. SPEED HUMPS SHALL BE CONSTRUCTED WITH 1/2" MARSHALL MIX FOR HIGH TRAFFIC. COMPACTION SHALL BE PER SECTION 321. TACK COAT PER SECTION 713 SHALL BE APPLIED PRIOR TO PAVING.
7. STRIPING WILL BE (2) COATS OF WHITE PAINT WITH GLASS BEADS.
8. TRANSVERSE EDGE JOINTS (ACROSS ROADWAY)
   A. FOR EXISTING ASPHALT PAVEMENTS EQUAL TO OR GREATER THAN 2 INCHES IN THICKNESS: SAWCUT AND REMOVE A 24 INCH WIDTH AT THE MATCHING SPEED HUMP EDGE. REPLACE THE FULL DEPTH OF REMOVED ASPHALT WITH SPEED HUMP ASPHALT AS A SINGLE OPERATION DURING CONSTRUCTION OF THE SPEED HUMP.

   B. FOR EXISTING ASPHALT PAVEMENTS LESS THAN 2 INCHES IN THICKNESS: REMOVE A 24 INCH WIDTH OF PAVEMENT AT THE MATCHING SPEED HUMP EDGE.
9. LONGITUDINAL EDGE JOINTS (ALONG THE LIP OF GUTTER): REMOVE THE EXISTING PAVEMENT FOR A MINIMUM WIDTH OF TWELVE INCHES (12"). THE NEW ASPHALT SPEED HUMP PAVEMENT GRADE SHALL TAPER IN A DISTANCE OF 12 INCHES FROM THE SPEED HUMP PROFILE GRADE TO MATCH 1/4" ABOVE THE LIP OF GUTTER.

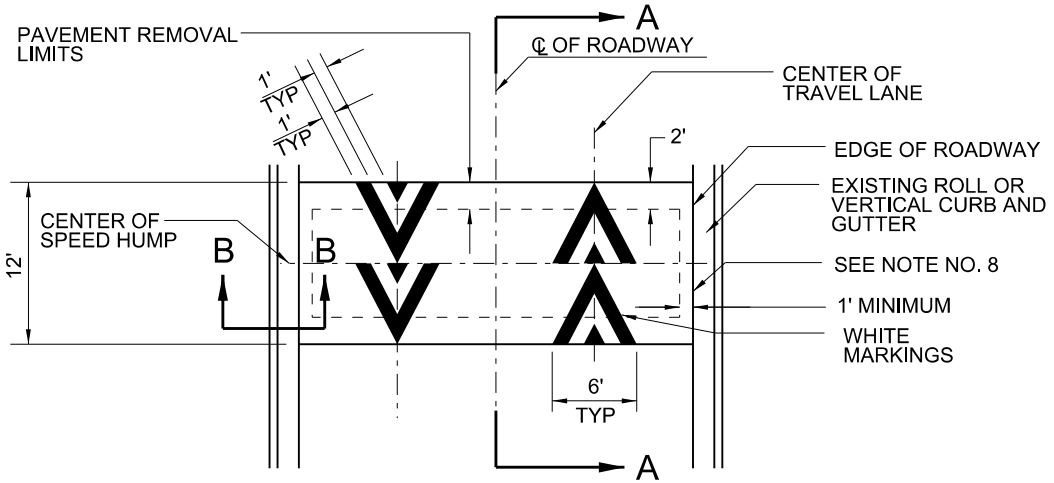

PLAN VIEW

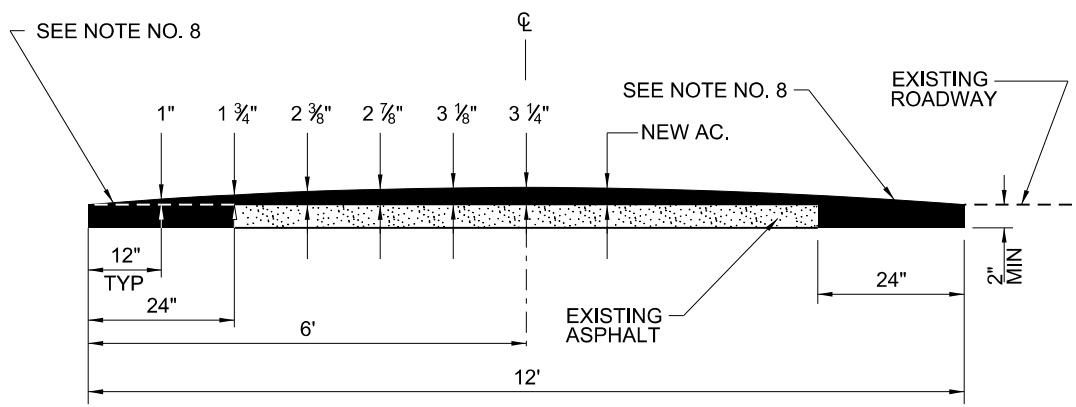

SECTION A-A

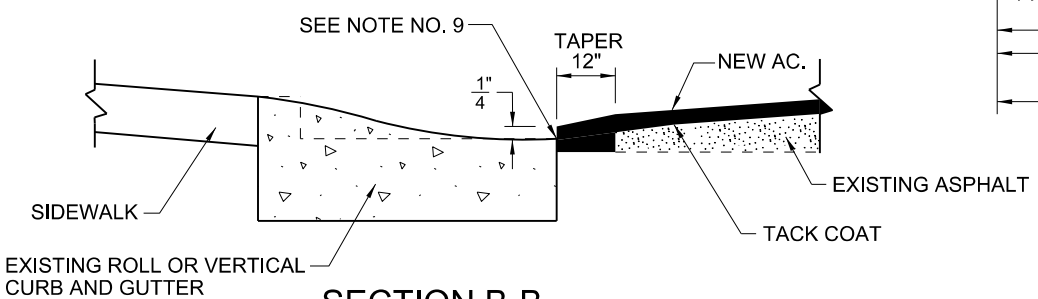

SECTION B-B

MARICOPA COUNTY DEPARTMENT OF TRANSPORTATION	RESIDENTIAL SPEED HUMP WITH CURB AND GUTTER	DATE:	DETAIL NO.
STANDARD DETAIL		12/2012	2010-2

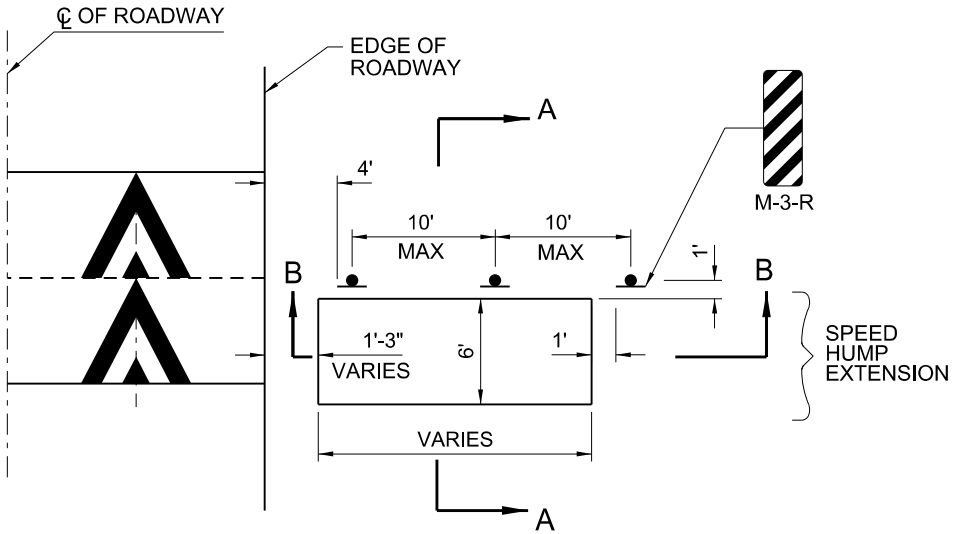

SPEED HUMP EXTENSION
PLAN VIEW

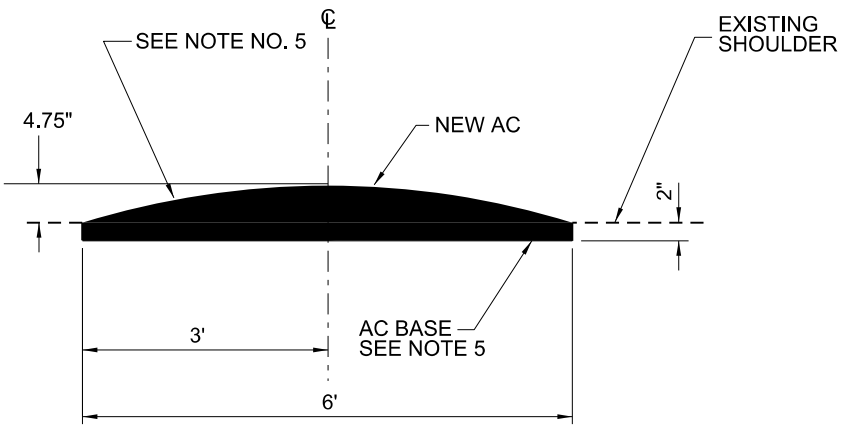

SECTION A-A

NOTES:

1. SECTION A-A FINISHED SURFACE DIMENSIONS ARE DISTANCES FROM THE SURFACE OF THE EXISTING SHOULDER. THE CONSTRUCTION TOLERANCE FOR THESE CROSS SECTION DIMENSIONS IS + 0.25 INCHES.
2. SPEED HUMP EXTENSIONS THAT DO NOT COMPLY WITH CONSTRUCTION TOLERANCES SHALL BE REMOVED AND REPLACED AT CONTRACTOR'S EXPENSE.
3. SPEED HUMP EXTENSION SHALL BE 6 FEET WIDE, 4.5 INCHES HIGH AND THE LENGTH AS SHOWN ON PLANS.
4. SPEED HUMP EXTENSIONS SHALL BE CONSTRUCTED WITH 1/2" MARSHALL MIX FOR HIGH TRAFFIC. COMPACTION SHALL BE PER SECTION 321. TACK COAT PER SECTION 321.4, IF SPEED HUMP EXTENSION TO BE BUILT IN MORE THAN 1 LIFT.
5. IN SECTION A-A, FOR SPEED HUMP EXTENSION THE ASPHALT CONCRETE BASE IS AS SHOWN ON PLAN OR AS DIRECTED BY MCDOT. IF BASE IS CONSTRUCTED, ASPHALT CONCRETE BASE SHALL BE AT LEAST 2 INCHES IN THICKNESS WITH FRAMEWORK, AND BACKFILL AFTER REMOVAL OF FRAMEWORK INCLUDED.
6. ONE FOOT END SECTIONS SHOWN BELOW IN SECTION B-B, SHALL BE COMPACTED BY MEANS OF HAND TAMPER.
7. THE CONTRACTOR SHALL WARRANT THE SPEED HUMP EXTENSION HEIGHT TO BE AT LEAST 4 .50 INCHES FOR 24 MONTHS. IF THE SPEED HUMP EXTENSION IS LESS THAN 4.50 INCHES AT THE 24 MONTH WARRANTY REVIEW, THE SPEED HUMP EXTENSION SHALL BE REPLACED AT THE CONTRACTOR'S EXPENSE.
8. NUMBER OF OBJECT MARKERS WILL VARY DEPENDING ON THE LENGTH OF THE EXTENSION. IF EXTENSION IS 10 FEET OR LESS ONLY TWO OBJECT MARKERS WILL BE REQUIRED; IF GREATER THAN 10 FEET THREE OBJECT MARKERS WILL BE REQUIRED AND EQUALLY SPACED. THE NUMBER AND LOCATION OF MARKERS WILL BE SHOWN ON PLANS.

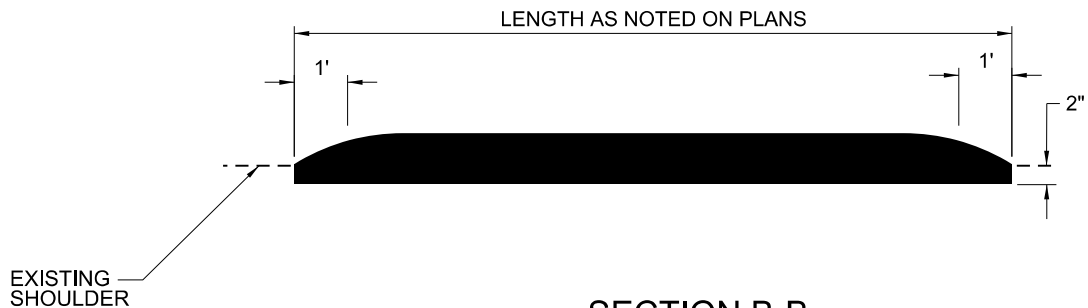

SECTION B-B

MARICOPA COUNTY DEPARTMENT OF TRANSPORTATION	SPEED HUMP EXTENSION	DATE:	DETAIL NO.
STANDARD DETAIL		12/12	2010-3

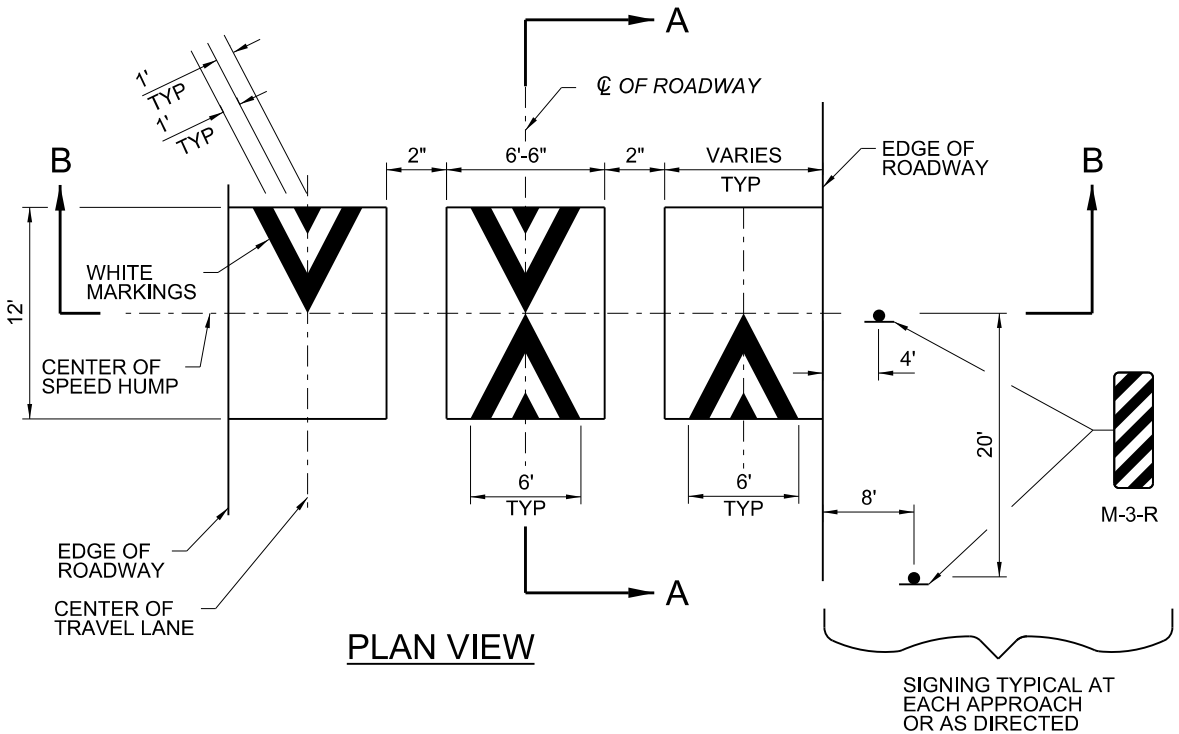

PLAN VIEW

NOTES:

1. SECTION A-A FINISHED SURFACE DIMENSIONS ARE DISTANCES FROM THE SURFACE OF THE EXISTING ROADWAY. THE CONSTRUCTION TOLERANCE FOR THESE CROSS SECTION DIMENSIONS IS ± 0.25 INCHES.
2. SPEED CUSHION THAT DO NOT COMPLY WITH CONSTRUCTION TOLERANCES SHALL BE REMOVED AND REPLACED AT CONTRACTOR'S EXPENSE.
3. THE CONTRACTOR SHALL WARRANT THAT THE MID-POINT HEIGHT TO BE AT LEAST 3 INCHES FOR 24 MONTHS. IF THE SPEED CUSHION HEIGHT IS LESS THAN 3 INCHES AT THE 24 MONTH WARRANTY REVIEW, THE SPEED CUSHION SHALL BE REPLACED AT THE CONTRACTOR'S EXPENSE.
4. SPEED CUSHION SHALL NOT BE PLACED OVER MANHOLES, VALVE BOXES, SURVEY MONUMENTS, ETC. OR AT DRIVEWAYS.
5. SPEED CUSHION SHALL ONLY BE PLACED AT LOCATIONS APPROVED BY MCDOT.
6. SPEED CUSHION SHALL BE CONSTRUCTED WITH 1/2" MARSHALL MIX FOR HIGH TRAFFIC. COMPACTION SHALL BE PER SECTION 321. TACK COAT PER SECTION 713 SHALL BE APPLIED PRIOR TO PAVING.
7. STRIPING WILL BE (2) COATS OF WHITE PAINT WITH GLASS BEADS.
8. TRANSVERSE EDGE JOINTS (ACROSS ROADWAY)
   A. FOR EXISTING ASPHALT PAVEMENTS EQUAL TO OR GREATER THAN 2 INCHES IN THICKNESS: SAWCUT AND REMOVE A 24 INCH WIDTH AT THE MATCHING SPEED CUSHION EDGE. REPLACE THE FULL DEPTH OF REMOVED ASPHALT WITH SPEED CUSHION ASPHALT AS A SINGLE OPERATION DURING CONSTRUCTION OF THE SPEED CUSHION.
   B. FOR EXISTING ASPHALT PAVEMENTS LESS THAN 2 INCHES IN THICKNESS: REMOVE PAVEMENT AND SUBGRADE TO A MINIMUM DEPTH OF 2 INCHES. INSTALL NEW ASPHALT BASE PAD FOR THE SPEED CUSHION.

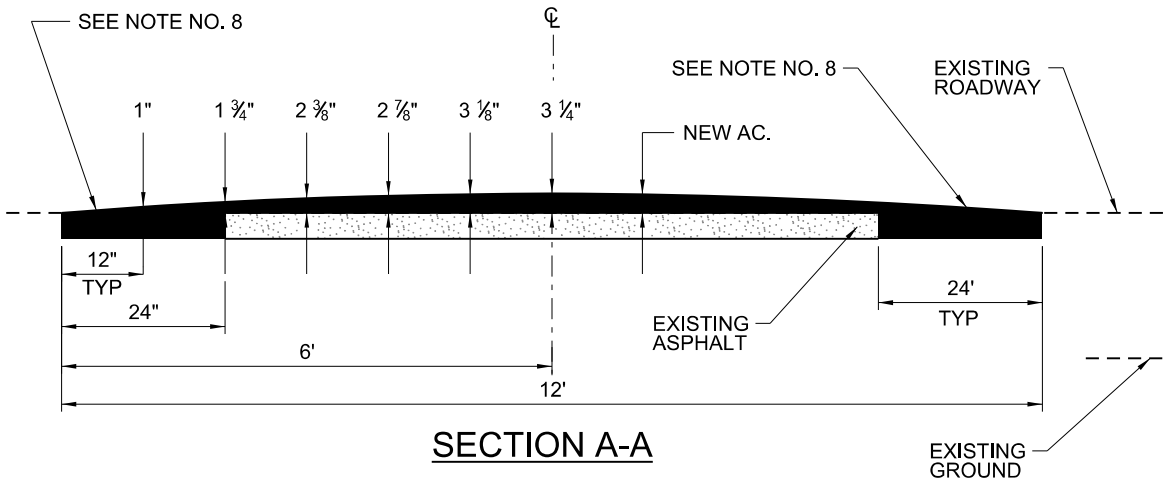

SECTION A-A

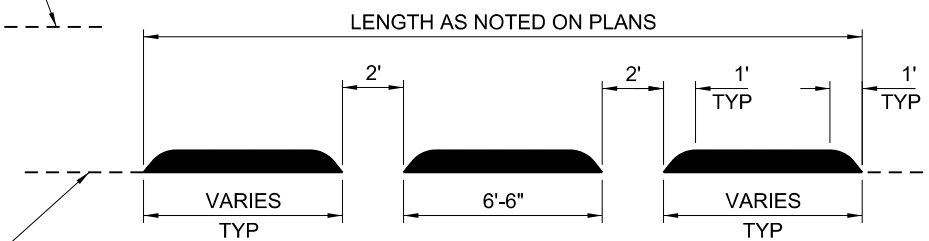

SECTION B-B

MARICOPA COUNTY DEPARTMENT OF TRANSPORTATION	RESIDENTIAL SPEED CUSHION WITHOUT CURB AND GUTTER	DATE:	DETAIL NO.
STANDARD DETAIL		11/14	2011

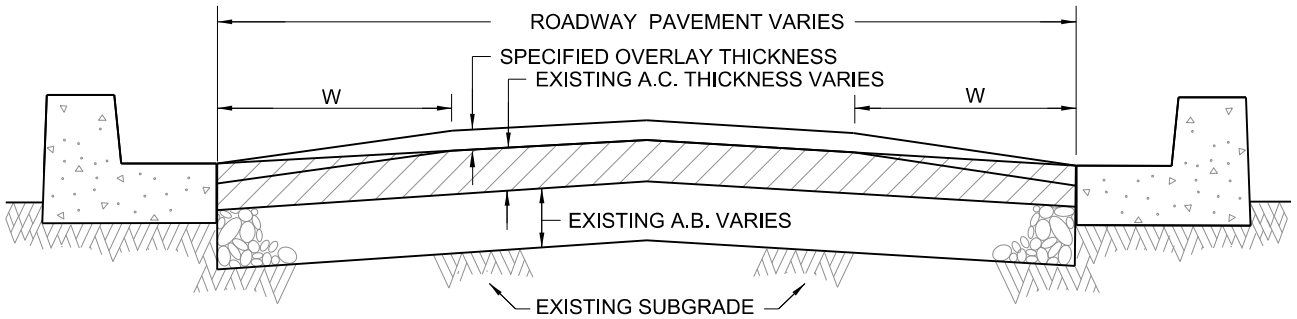

TYPICAL CROSS SECTION

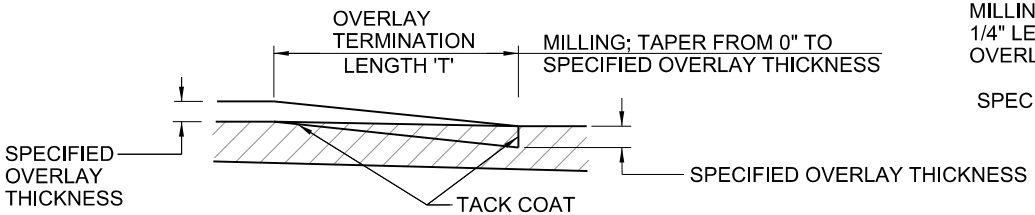

LONGITUDINAL TERMINATION OF OVERLAY

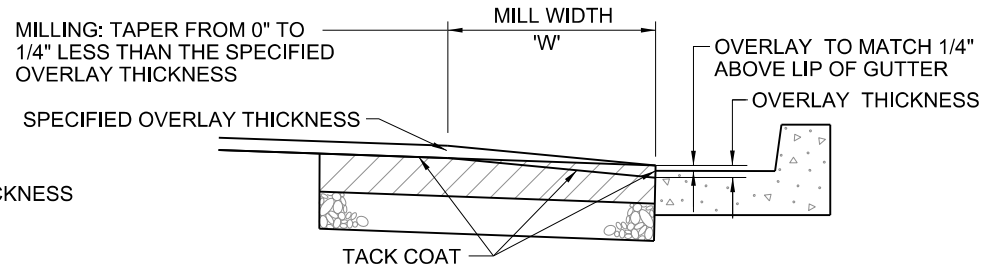

EDGE MILLING & OVERLAY DETAIL

DESIGN NOTES:

1. LENGTH OF TERMINATION TAPER SHALL BE DETERMINED BASED ON ROADWAY DESIGN SPEED AND THE ALLOWABLE VERTICAL GRADE BREAK AS DEFINED IN SECTION 5.11 OF THE ROADWAY DESIGN MANUAL.
2. WIDTH OF LONGITUDINAL EDGE MILLING SHALL BE DETERMINED SUCH THAT THE FINAL CROSS SLOPE DOES NOT EXCEED 3.0%. THE RESULTANT ANGLE POINT IN THE OVERLAY SURFACE IS TO ALIGN (APPROXIMATELY) WITH A TRAFFIC LANE LINE.
3. THE ROADWAY LONGITUDINAL SLOPE AT PEDESTRIAN CROSSINGS SHALL NOT EXCEED 2%.

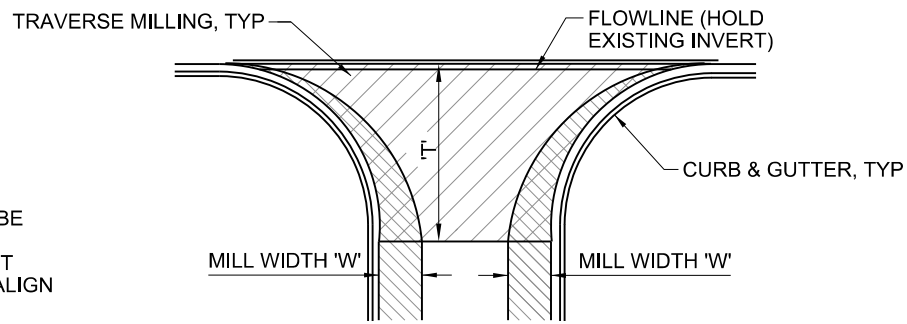

TERMINATION PLAN VIEW

NOTES:

1. SEE PROJECT MILLING SCHEDULE FOR DIMENSIONS OF LONGITUDINAL EDGE MILLING WIDTH 'W' AND TERMINATION TAPER LENGTH 'T'.
2. OVERLAY IS NOT TO CHANGE FLOWLINE ELEVATIONS AT ASPHALT VALLEY GUTTERS. PROVIDE LONGITUDINAL TERMINATION TO MATCH FLOWLINE GRADE.

MARICOPA COUNTY DEPARTMENT OF TRANSPORTATION	MILLING FOR OVERLAY	DATE:	DETAIL NO.
STANDARD DETAIL		09/27/2017	2013

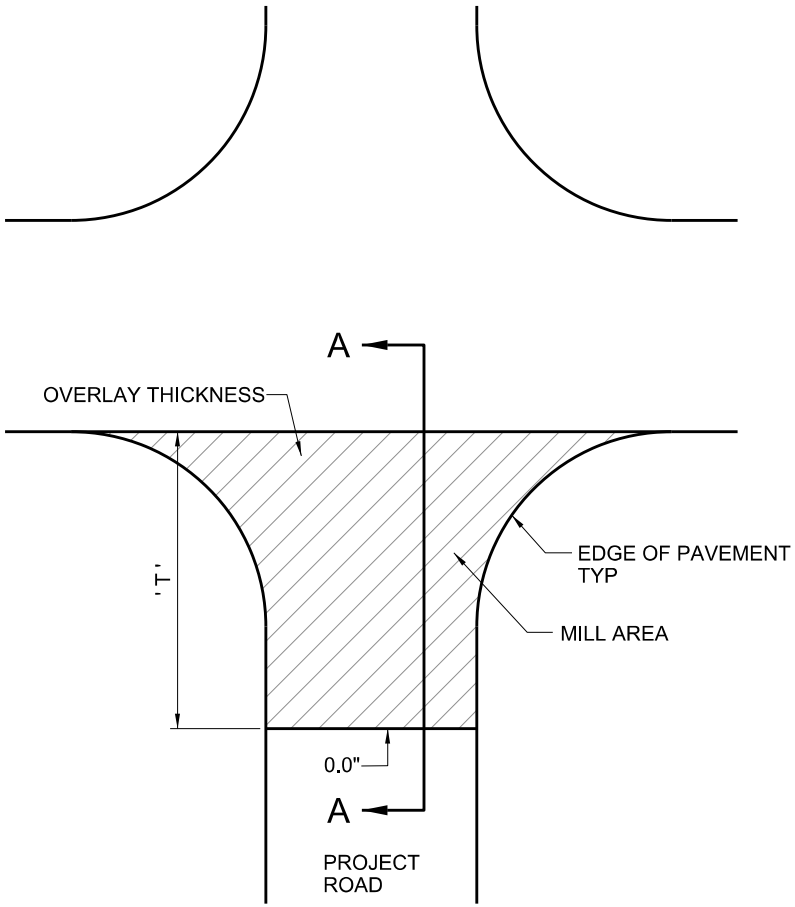

TYPE I TERMINATION OF OVERLAY

PLAN VIEW

NOTES:

1. TYPE I APPLIES TO PROJECTS THAT HAVE START OR END POINTS AWAY FROM INTERSECTIONS.
2. TYPE I ALSO APPLIES TO THE ENDS OF A BRIDGE DECK / APPROACH SLAB.
3. THE ROADWAY LONGITUDINAL SLOPE AT PEDESTRIAN CROSSINGS SHALL NOT EXCEED 2%.

CLASSIFICATION	' T '
ARTERIAL	45 FT
COLLECTOR / LOCAL	25 FT

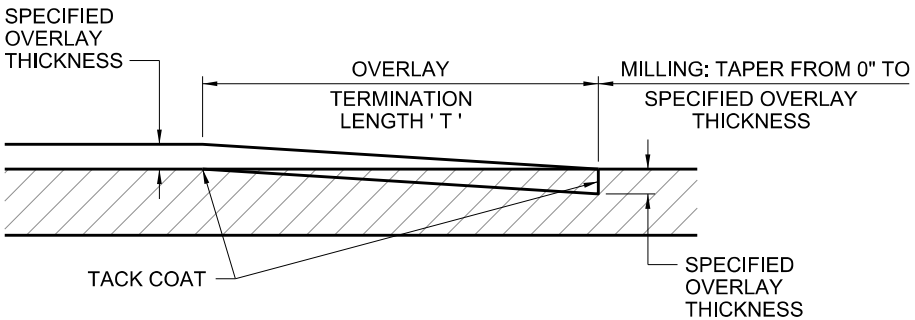

CROSS SECTION A-A

LONGITUDINAL TERMINATION OF OVERLAY

MARICOPA COUNTY DEPARTMENT OF TRANSPORTATION	MILLING FOR OVERLAY WITHOUT CURB TYPE I TERMINATION	DATE:	DETAIL NO.
STANDARD DETAIL		01/01/2019	2014-1

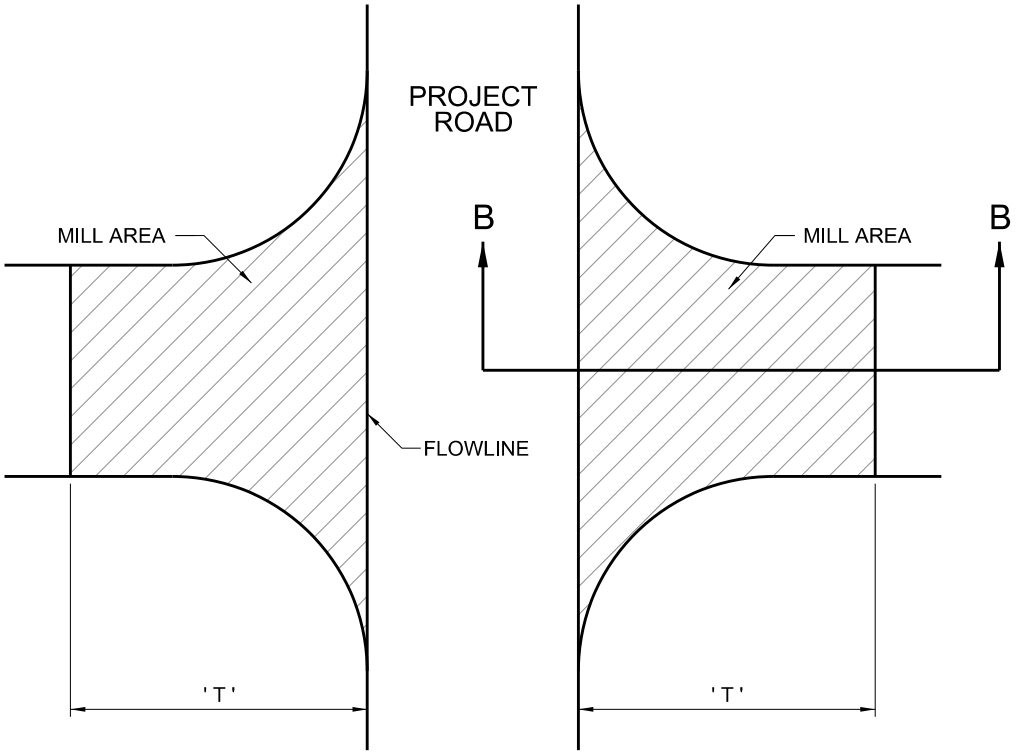

TYPE II TERMINATION OF OVERLAY

PLAN VIEW

NOTE:

1. IF SIDE STREET SURFACE IS CHIP SEAL, FEATHERING IS ALLOWED AND TERMINAL MILL MAY BE OMITTED.
2. THE ROADWAY LONGITUDINAL SLOPE AT PEDESTRIAN CROSSINGS SHALL NOT EXCEED 2%.

CLASSIFICATION	'T'
ARTERIAL	45 FT
COLLECTOR / LOCAL	25 FT

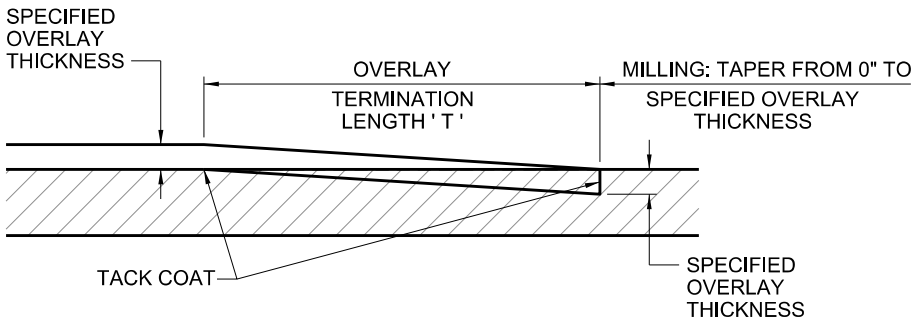

CROSS SECTION B-B

LONGITUDINAL TERMINATION OF OVERLAY

MARICOPA COUNTY DEPARTMENT OF TRANSPORTATION	MILLING FOR OVERLAY WITHOUT CURB TYPE II TERMINATION	DATE:	DETAIL NO.
STANDARD DETAIL		01/01/2019	2014-2

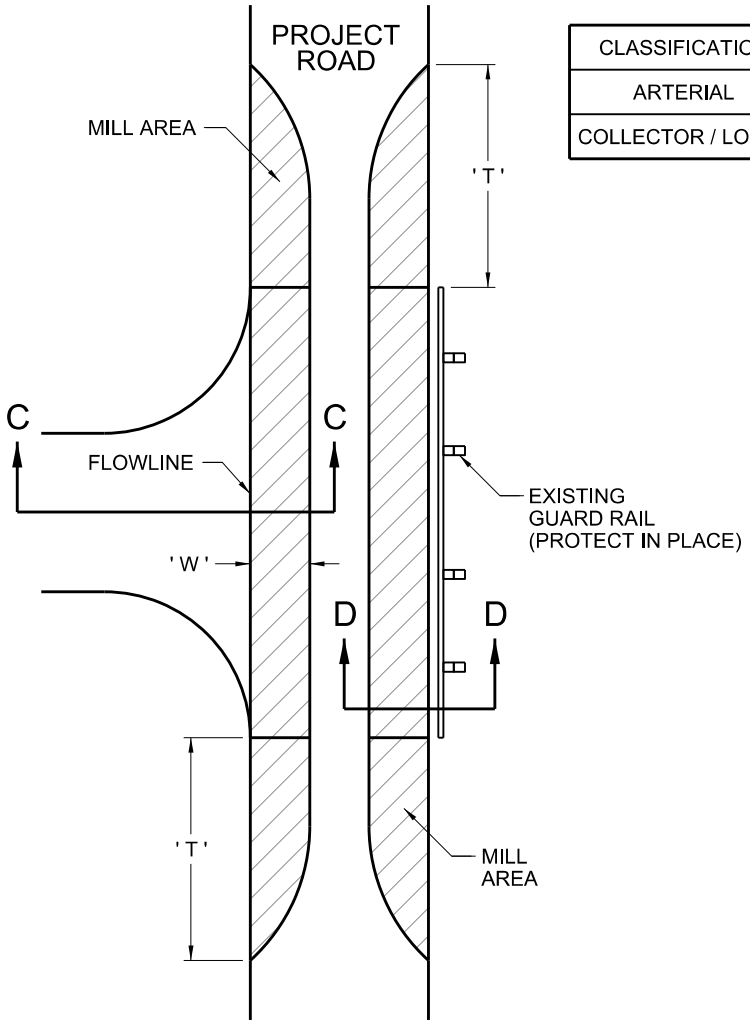

CLASSIFICATION	'T'
ARTERIAL	45 FT
COLLECTOR / LOCAL	25 FT

TYPE III TERMINATION OF OVERLAY

PLAN VIEW

NOTES:

1. W = 13 FT. OR AS SHOWN ON THE PLANS, OR AS STATED IN THE SPECIAL PROVISIONS.
2. TYPE III ALSO APPLIES TO OVERLAYS ABUTTING EXTENDED SHOULDER PAVEMENTS AND PARKING LOTS.
3. WIDTH OF LONGITUDINAL EDGE MILLING SHALL BE DETERMINED SUCH THAT THE FINAL CROSS SLOPE DOES NOT EXCEED 3.0%. THE RESULTANT ANGLE POINT IN THE OVERLAY SURFACE IS TO ALIGN (APPROXIMATELY) WITH A TRAFFIC LANE LINE.
4. THE ROADWAY LONGITUDINAL SLOPE AT PEDESTRIAN CROSSINGS SHALL NOT EXCEED 2%.

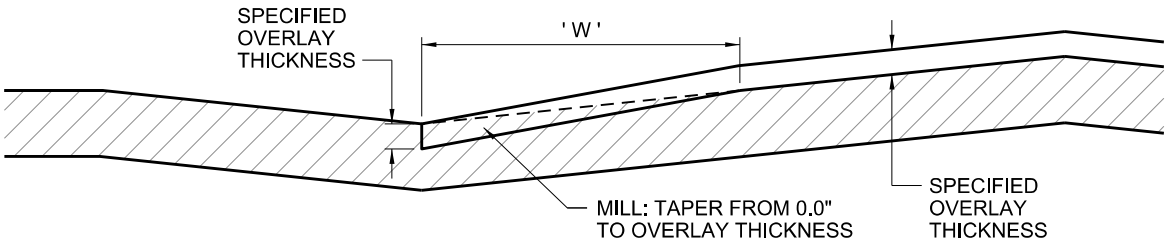

CROSS SECTION C-C

LONGITUDINAL TERMINATION OF OVERLAY

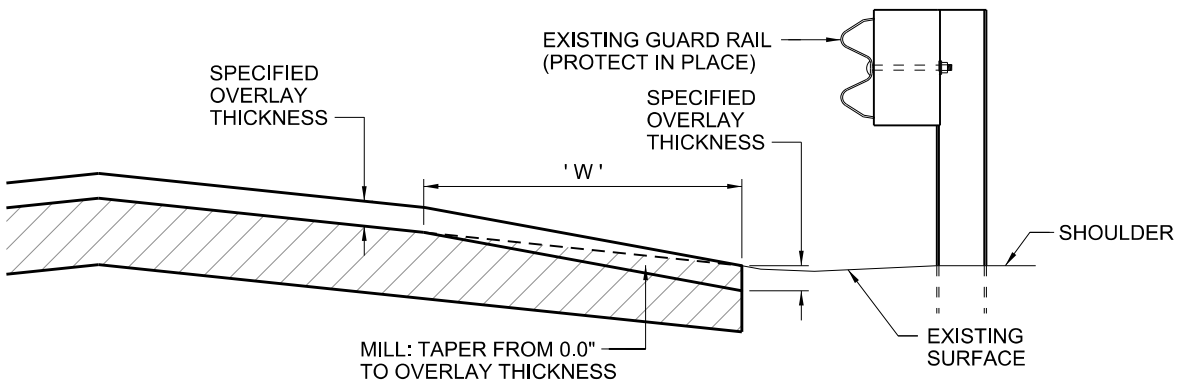

CROSS SECTION D-D

LONGITUDINAL TERMINATION OF OVERLAY

MARICOPA COUNTY DEPARTMENT OF TRANSPORTATION	MILLING FOR OVERLAY WITHOUT CURB TYPE III TERMINATION	DATE:	DETAIL NO.
STANDARD DETAIL		01/01/2019	2014-3

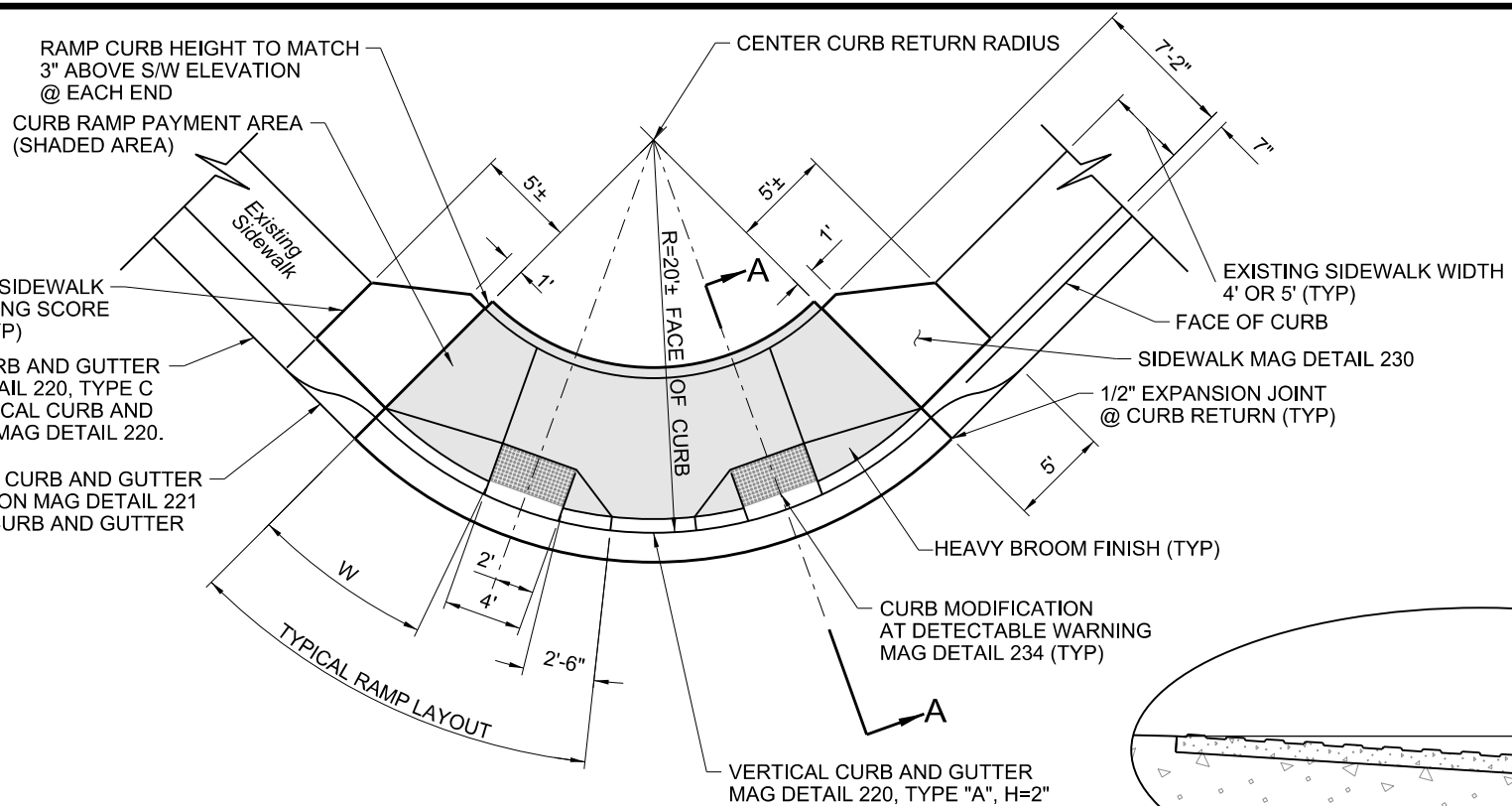

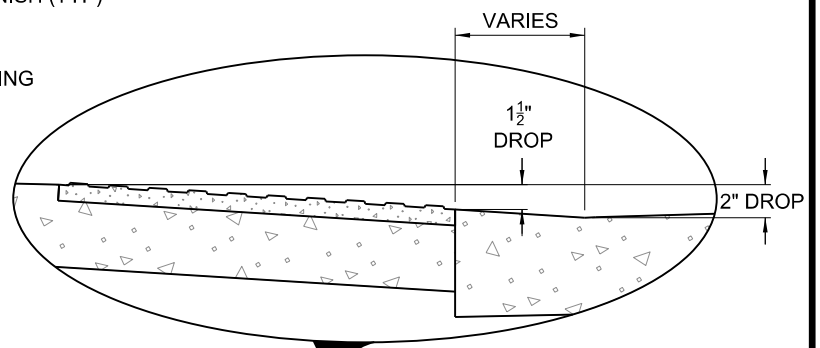

CURB HEIGHT	WING LENGTH (**W**) ALONG FACE OF CURB
4"	4'-6"
6"	6'-6"

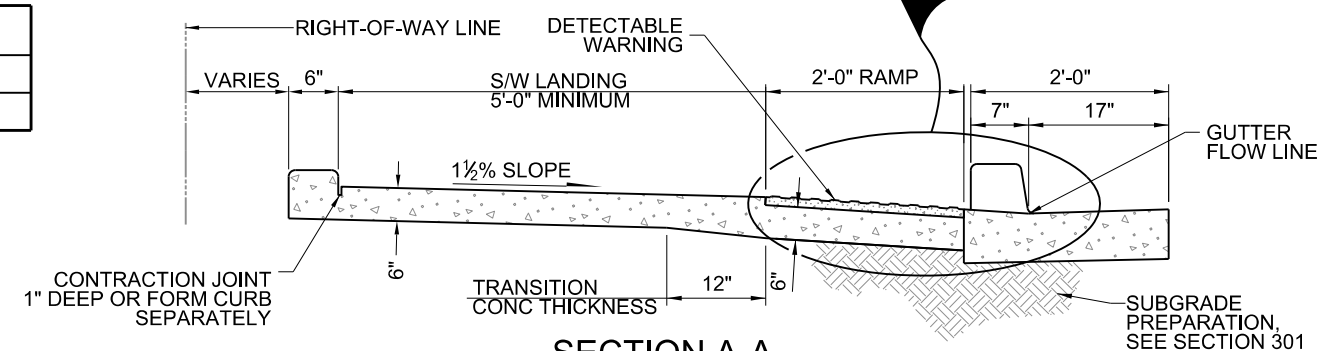

SECTION A-A

NOTES:

1. CONCRETE SHALL BE CLASS 'B' PER SECTION 725.
2. CONSTRUCTION SHALL CONFORM TO SECTION 340.
3. SIDEWALK SURFACE TO MATCH 1½% SLOPE FROM TOP OF CURB.
4. USE OF THIS DETAIL REQUIRES SPECIAL APPROVAL.

MARICOPA COUNTY DEPARTMENT OF TRANSPORTATION	RETROFIT 20' RETURN W/DUAL COMBINATION CURB RAMPS	DATE:	DETAIL NO.
STANDARD DETAIL		01/01/2019	2022

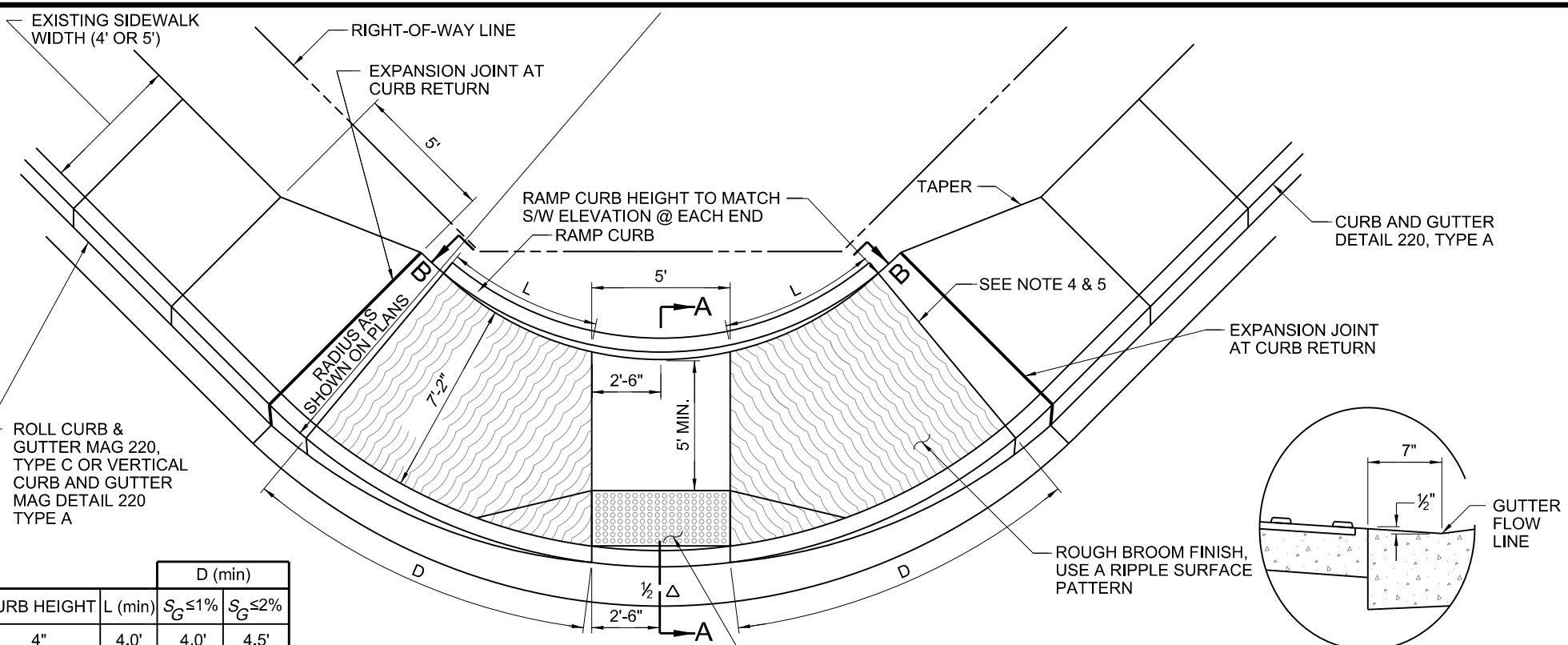

		D (min)	
CURB HEIGHT	L (min)	$S_G \leq 1\%$	$S_G \leq 2\%$
4"	4.0'	4.0'	4.5'
6"	6.0'	6.0'	6.5'
7"	7.0'	6.5'	7.5'

S_G=MAXIMUM GUTTER SLOPE WITHIN RAMP LIMITS

NOTES:

1. CLASS 'B' CONCRETE PER SECTION 725.
2. EXPANSION JOINTS SHALL CONFORM TO SECTION 340.
3. THIS DETAIL SHALL BE USED FOR EXISTING LOCAL ROADS ONLY.
4. INCREASE 'L' OR 'D' AS NEEDED TO HAVE THE TOP OF RAMP FORM A RADIAL LINE.
5. WHEN TOP OF RAMP IS LESS THAN 4' FROM CURB RETURN, EXTEND RAMP TO THE CURB RETURN.
6. DETAIL IS ADA COMPLIANT FOR $S_G \leq 2\%$.

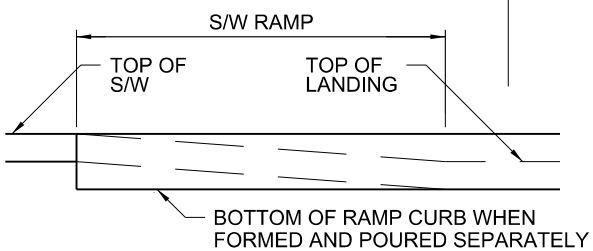

SECTION B-B

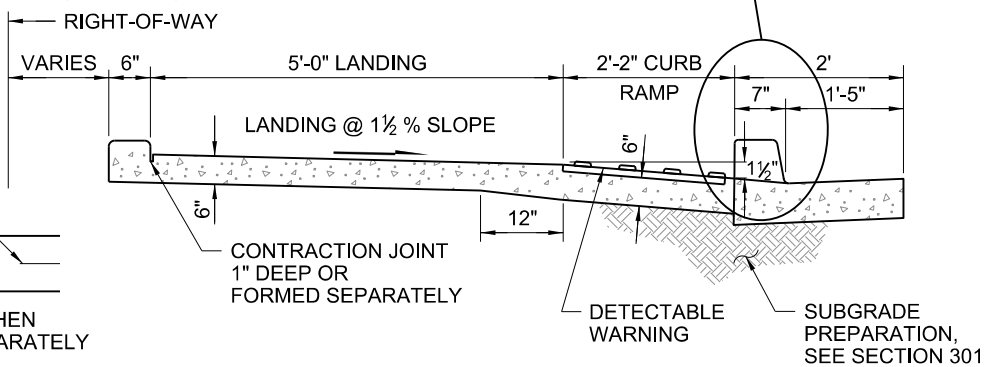

TYPE 'B'

SECTION A-A

MARICOPA COUNTY DEPARTMENT OF TRANSPORTATION	RETROFIT 20' - 25' RETURN W/ SINGLE COMBINATION CURB RAMP	DATE:	DETAIL NO.
STANDARD DETAIL		10/11/2018	2023

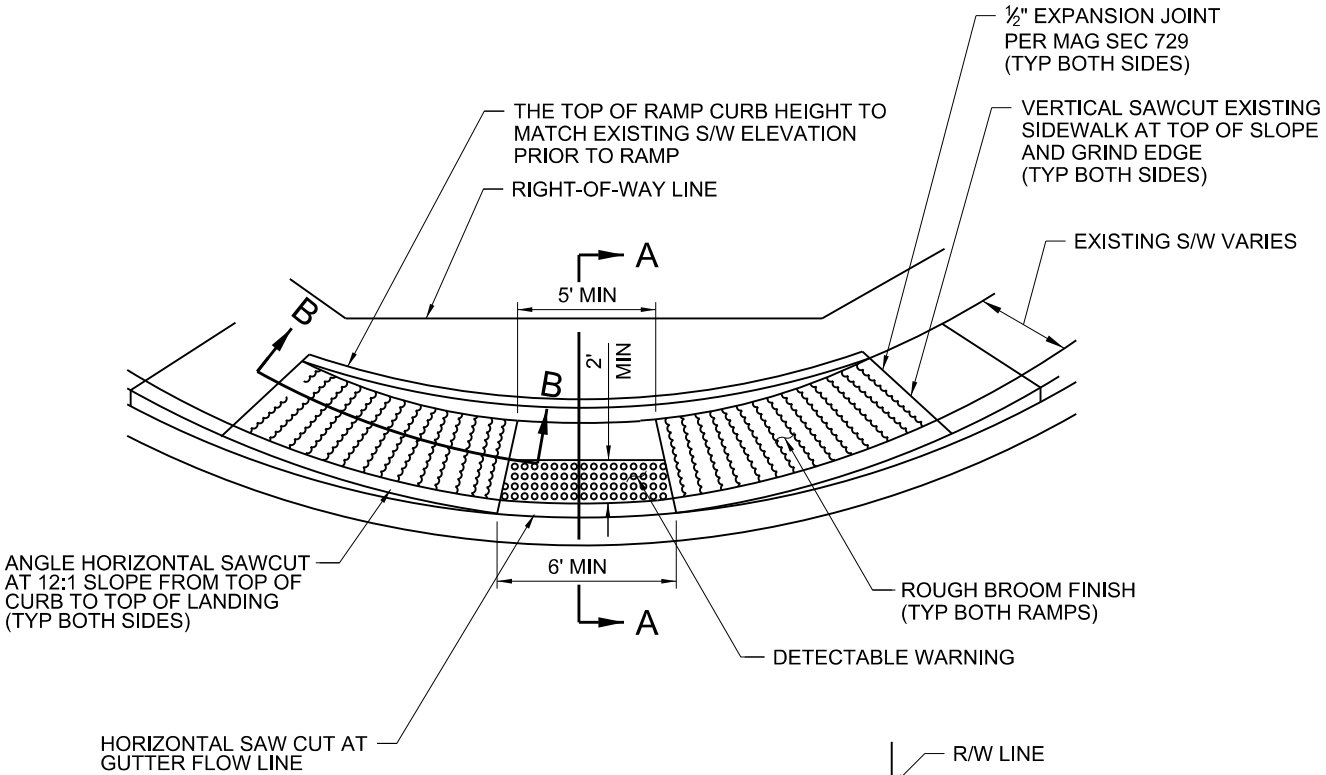

GENERAL NOTES:

SIDEWALK RAMP CONSTRUCTION METHOD 'A' INCLUDES BUT NOT LIMITED TO;

1. AFTER SAWCUTS HAVE BEEN MADE ALL EXCESS MATERIAL SHALL BE REMOVED AND DISPOSED OF BY THE CONTRACTOR DAILY.
2. ALL SAW CUT EDGES WHICH WILL BE EXPOSED SHALL BE ROUNDED BY GRINDING.
3. CONTRACTOR SHALL REMOVE AND REPLACE SIDEWALK TO THE NEAREST EXPANSION JOINT BEYOND THE OUTLINED PAY LIMITS SHOWN. IF THE 12:1 SLOPE DISTANCE IS 24 INCHES OR LESS FROM AN EXPANSION JOINT. THE COST OF THE ADJUSTMENT SHALL BE INCLUDED IN THE COST OF THE RAMP.
4. SIDEWALK AND RAMP CURB MAY BE CONSTRUCTED TOGETHER.
5. CONCRETE SHALL BE MAG 725 CLASS B.
6. PAY LIMITS ARE DENOTED BY HEAVY OUTLINED AREA.
7. DETECTABLE WARNING PER SECTION 340.
8. THIS DETAIL SHALL BE USED FOR EXISITNG LOCAL ROADS WITH LIMITED RIGHT OF WAY ONLY.

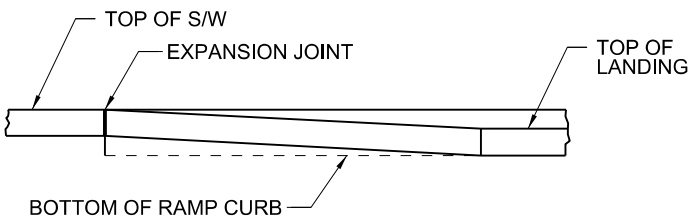

SECTION B-B

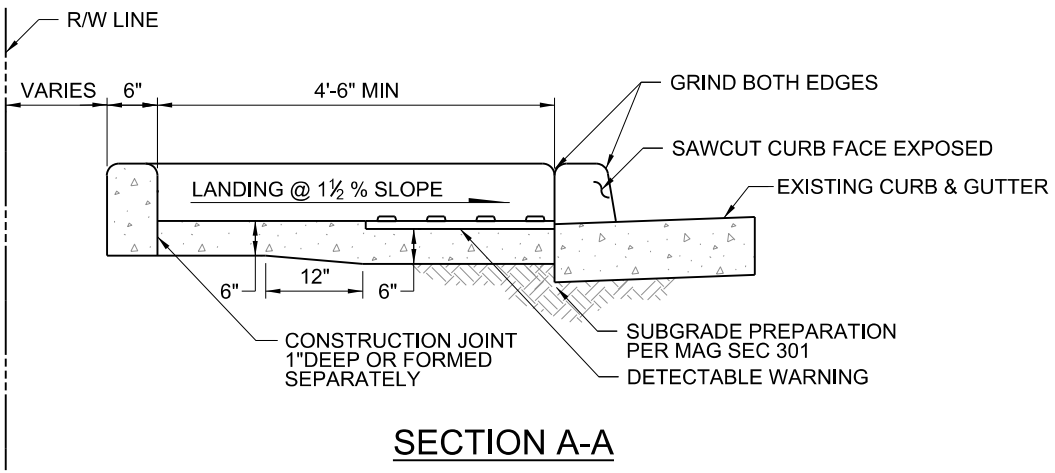

SECTION A-A

MARICOPA COUNTY DEPARTMENT OF TRANSPORTATION	SIDEWALK RAMP RETROFIT - METHOD A	DATE:	DETAIL NO.
STANDARD DETAIL		10/11/2018	2030-A

NOTES:

1. FOR OTHER SIDEWALK CONFIGURATIONS APPROACHING THE CURB RETURN SEE TRANSITION DETAILS ON SHEET 2031-2
2. CLASS "B" CONCRETE PER SECTION 725.
3. CONSTRUCTION SHALL CONFORM TO SECTION 340.
4. SIDEWALK SURFACE TO MATCH 1½% SLOPE FROM TOP OF CURB.
5. A SPECIAL DESIGN IS REQUIRED WHEN THE GUTTER GRADE AROUND THE RETURN EXCEEDS 2%
6. CURB RAMP LOCATIONS ARE DEFINED BY D_A AND D_B. D_A AND D_B ARE THE RESPECTIVE OFFSET DISTANCES TO RAMP 'A' AND RAMP 'B' MEASURED ALONG THE FACE OF CURB FROM THE CENTERLINE OF THE CURB RETURN TO THE TOP OF WING. THE DEFAULT VALUE FOR D_A AND D_B IS 12 INCHES.

   THE DEFAULT VALUES FOR D_A AND D_B ARE TO BE MODIFIED BY THE ENGINEER WHEN OBJECTS CONFLICT WITH CONSTRUCTION OF A CURB RAMP AT THE STANDARD LOCATION OR WHEN A MODIFIED DISTANCE WILL BETTER MATCH THE CROSSWALK ALIGNMENT.
7. WHEN ONLY RAMP 'A' OR RAMP 'B' IS TO BE CONSTRUCTED, THE CURB HEIGHT SHALL BE 6-INCHES THROUGHOUT THE RETURN AND THE CURB RAMP WINGS SHALL BOTH BE 6.5' AS MESURED ALONG THE FACE OF CURB.

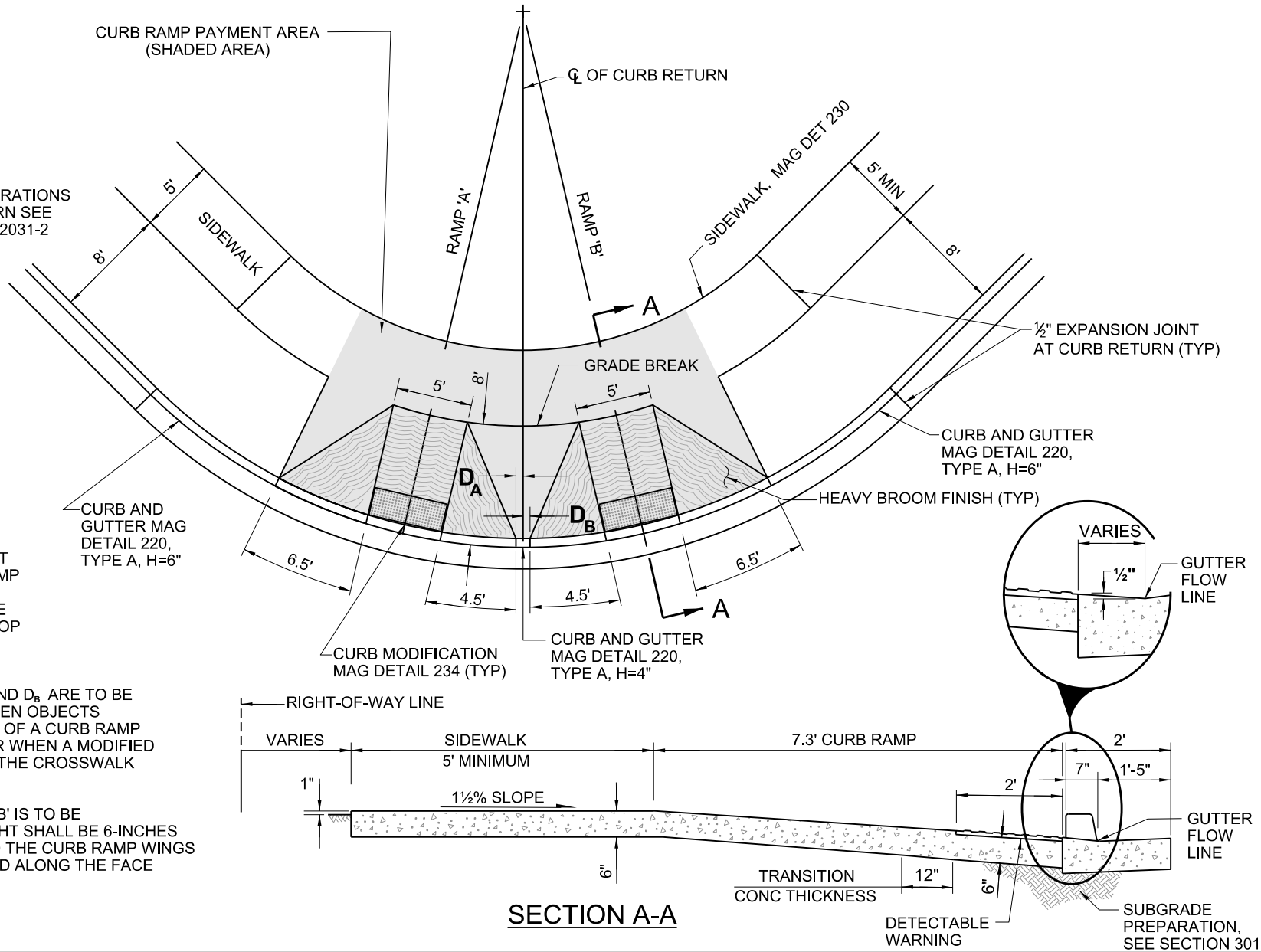

SECTION A-A

MARICOPA COUNTY DEPARTMENT OF TRANSPORTATION	RADIAL CURB RAMPS 30' & 35 ' CURB RETURNS	DATE:	DETAIL NO.
STANDARD DETAIL		01/01/2019	2031-1

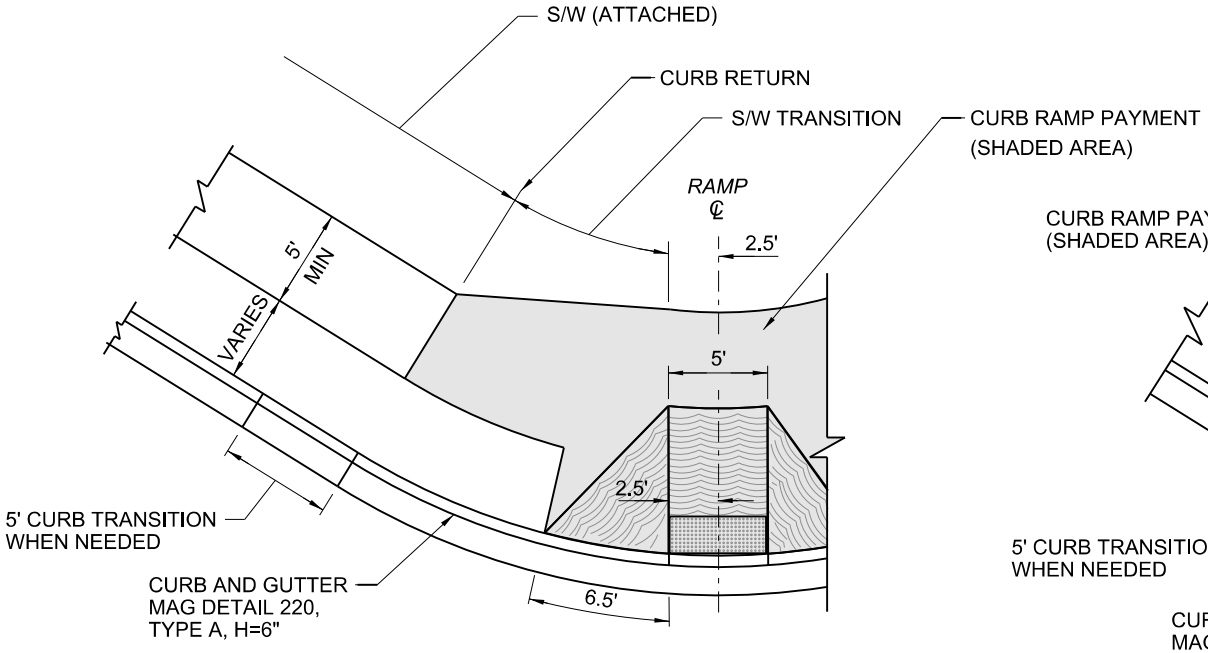

TYPE A TRANSITION
FOR DETACHED SIDEWALK
WITH OFFSET LESS THAN 8'

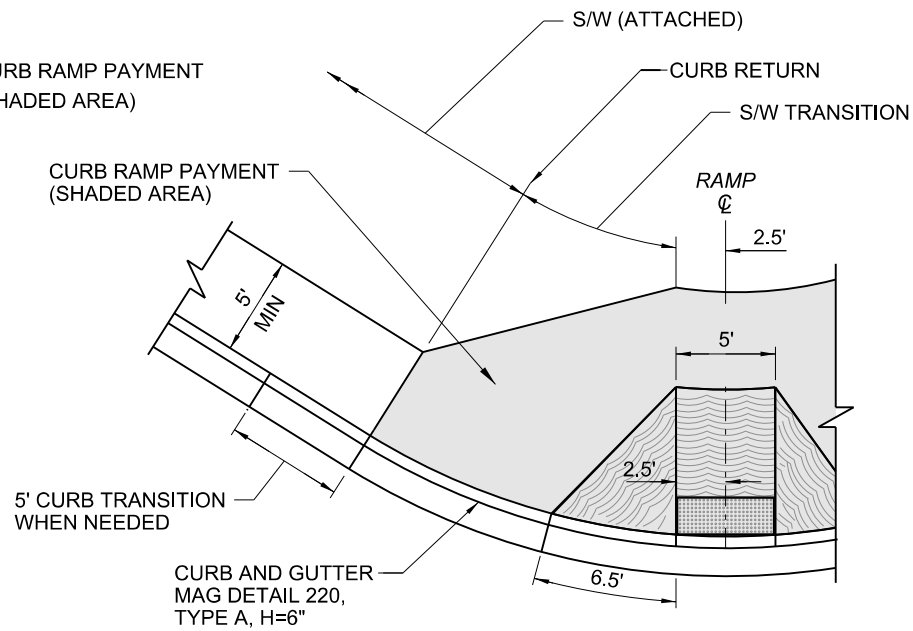

TYPE B TRANSITION
FOR ATTACHED SIDEWALK

NOTES:

1. DETAILS SHOW CONFIGURATIONS FOR ALTERNATIVE SIDEWALK APPOACHES TO RAMP 'A', USE SIMILAR CONFIGURATION FOR SIDEWALK APPROACHES TO RAMP 'B'.
2. SIDEWALK SURFACE SHALL MATCH 1.5% SLOPE FROM TOP OF CURB.

MARICOPA COUNTY DEPARTMENT OF TRANSPORTATION	RADIAL CURB RAMPS 30' & 35' CURB RETURNS	DATE:	DETAIL NO.
STANDARD DETAIL		01/01/2019	2031-2

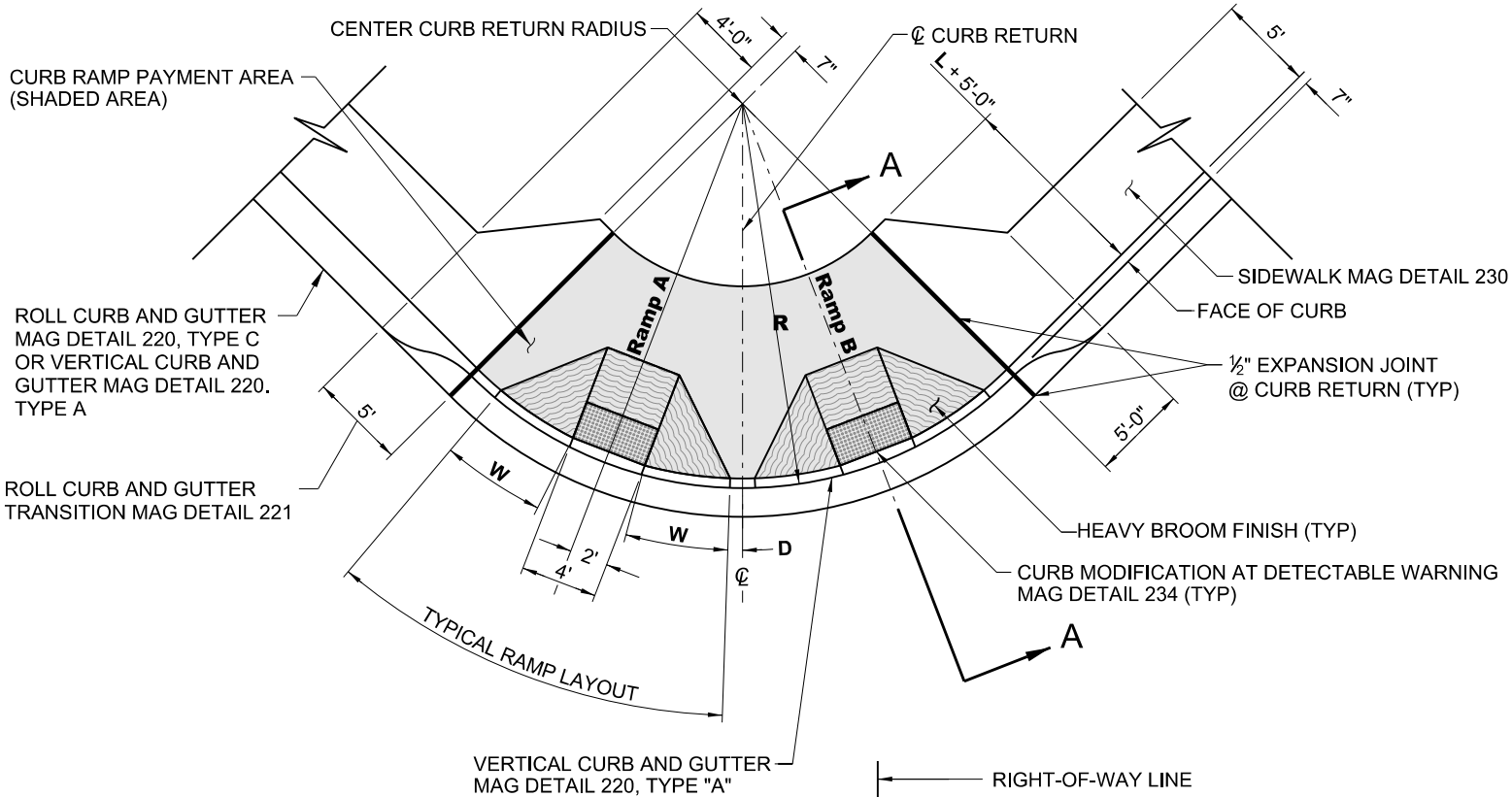

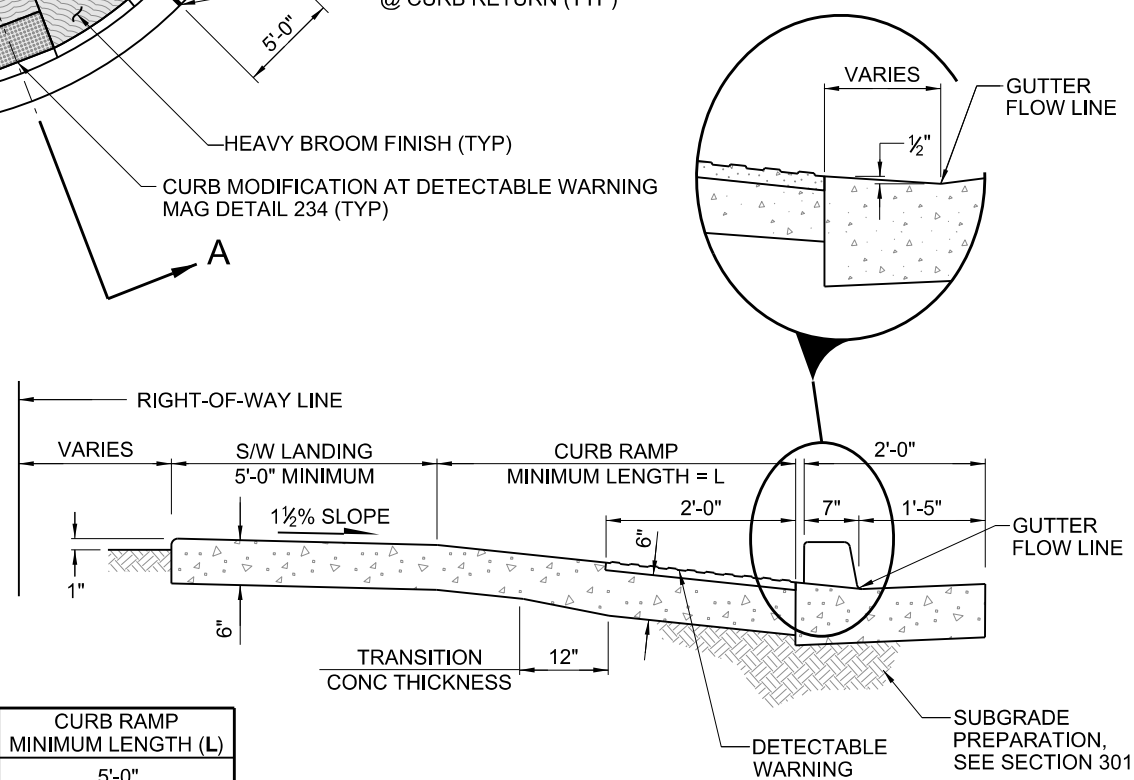

SECTION A-A

NOTES:

1. CONCRETE SHALL BE CLASS 'B' PER SECTION 725.
2. CONSTRUCTION SHALL CONFORM TO SECTION 340.
3. SIDEWALK SURFACE TO MATCH 1½% SLOPE FROM TOP OF CURB.
4. A SPECIAL DESIGN IS REQUIRED WHEN THE GUTTER GRADE AROUND THE RETURN EXCEEDS 2%.
5. THIS DETAIL TO BE USED FOR INTERSECTIONS OF RESIDENTIAL-RESIDENTIAL AND RESIDENTIAL-MINOR COLLECTOR ROADWAYS.

CURB HEIGHT	RETURN RADIUS (**R**) @ FACE CURB	MINIMUM WING LENGTH (**W**) ALONG FACE OF CURB	℄ OFFSET (**D**) @ FACE OF CURB	CURB RAMP MINIMUM LENGTH (**L**)
4"	20' or 25'	4'-6"	10"	5'-0"
6"	25'	6'-6"	6"	7'-6"

MARICOPA COUNTY DEPARTMENT OF TRANSPORTATION	RADIAL CURB RAMPS FOR RESIDENTIAL INTERSECTIONS	DATE:	DETAIL NO.
STANDARD DETAIL		01/01/2019	2032

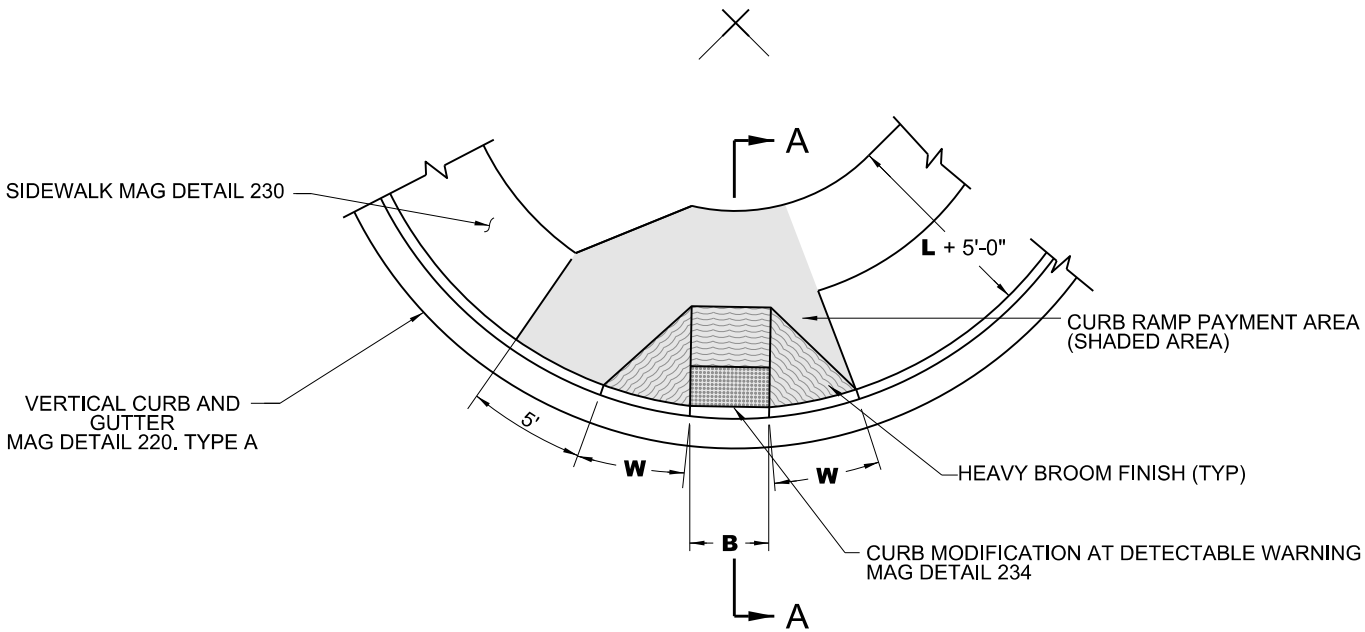

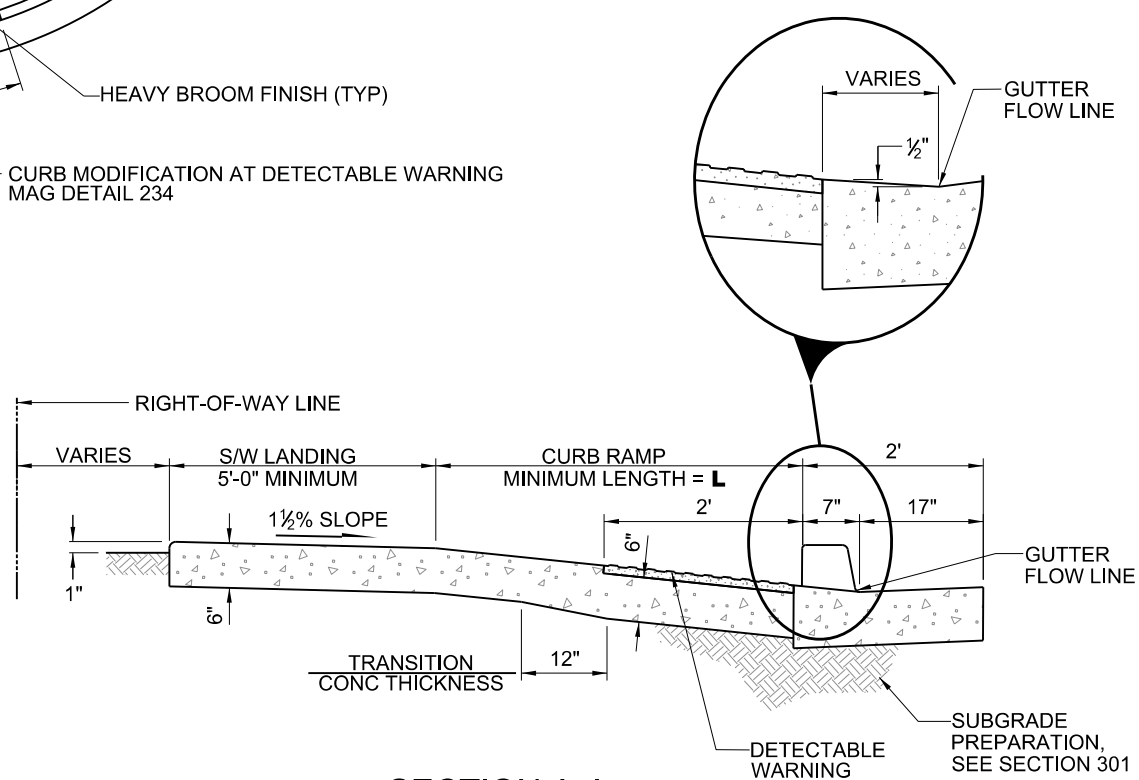

SECTION A-A

NOTES:

1. CONCRETE SHALL BE CLASS 'B' PER SECTION 725.
2. CONSTRUCTION SHALL CONFORM TO SECTION 340.
3. SIDEWALK SURFACE TO MATCH 1½% SLOPE FROM TOP OF CURB.
4. A SPECIAL DESIGN IS REQUIRED WHEN THE GUTTER GRADE EXCEEDS 2%.
5. RAMP WIDTH (**B**) SHALL BE 5' UNLESS OTHERWISE NOTED.

CURB HEIGHT	MINIMUM WING LENGTH (**W**) ALONG FACE OF CURB	CURB RAMP MINIMUM LENGTH (**L**)
4"	4'-6"	5'-0"
6"	6'-6"	7'-6"

MARICOPA COUNTY DEPARTMENT OF TRANSPORTATION	SINGLE RADIAL CURB RAMP AT SIDEWALK TRANSITION	DATE:	DETAIL NO.
STANDARD DETAIL		01/01/2019	2033

TABLE A		
	DRIVEWAY WIDTH	
	MIN	MAX *
COMMERCIAL/INDUSTRIAL/ MULTI-FAMILY (50+)	24'	40'

*IF LEFT TURN LANE PROVIDED

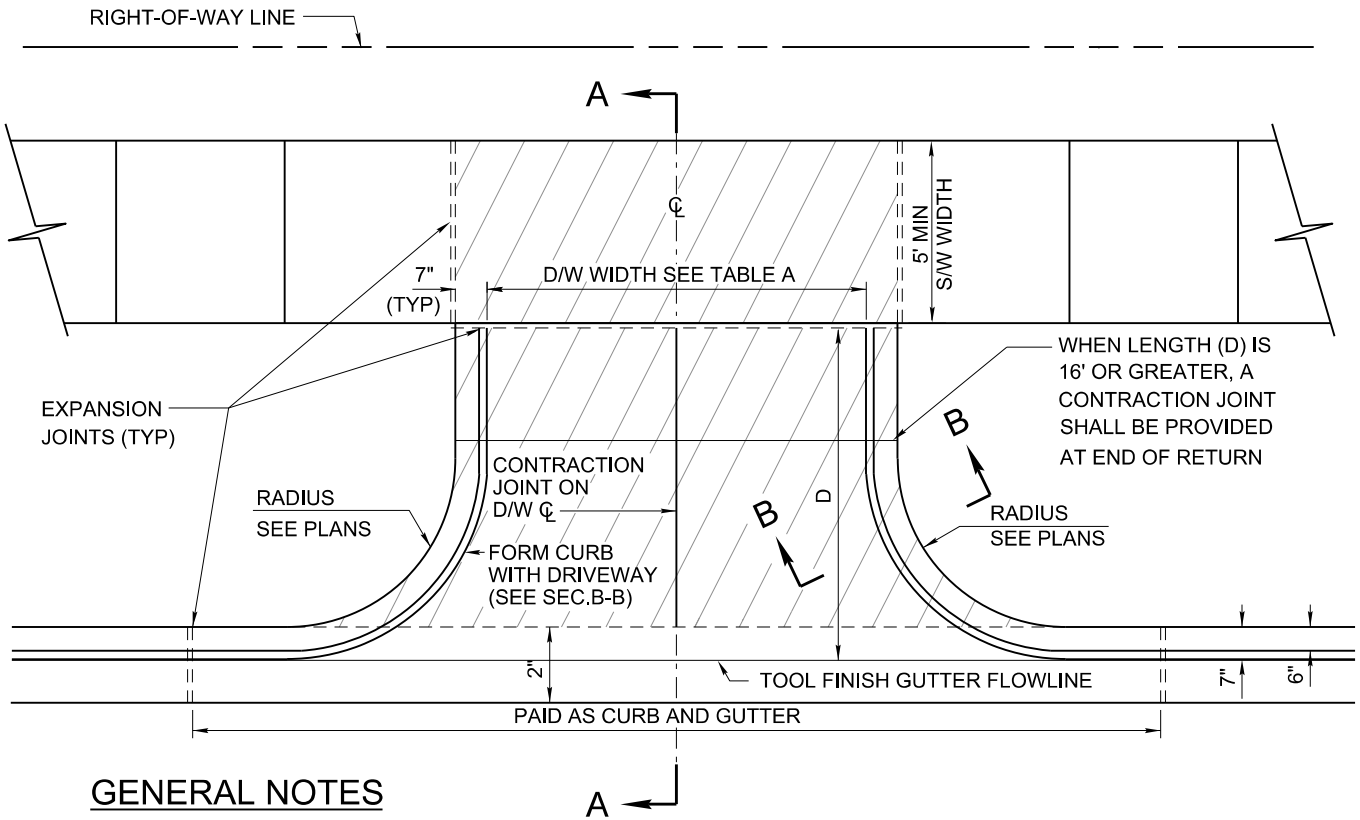

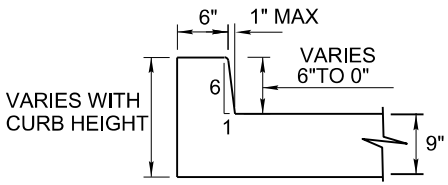

D/W CURB
SECTION B-B

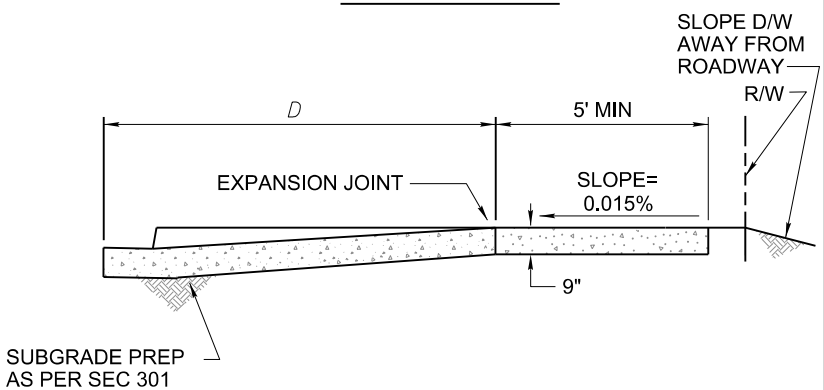

SECTION A-A

GENERAL NOTES

1. THIS TYPE D/W TO BE USED ONLY UPON APPROVAL OF TRANSPORTATION AGENCY.
2. EXPANSION JOINT FILLER SHALL BE ½" BITUMINOUS TYPE PERFORMED EXPANSION JOINT FILLER, ASTM D175I.
3. CONCRETE: CLASS A.
4. HATCHED AREA REPRESENTS DRIVEWAY PAYMENT AREA.

MARICOPA COUNTY DEPARTMENT OF TRANSPORTATION	RETURN TYPE DRIVEWAYS WITH DETACHED SIDEWALK	DATE:	DETAIL NO.
STANDARD DETAIL		12/17/2019	2036-1

TABLE A		
	DRIVEWAY WIDTH	
	MIN	MAX *
COMMERCIAL/INDUSTRIAL/ MULTI-FAMILY (50+)	24'	40'

*IF LEFT TURN LANE PROVIDED

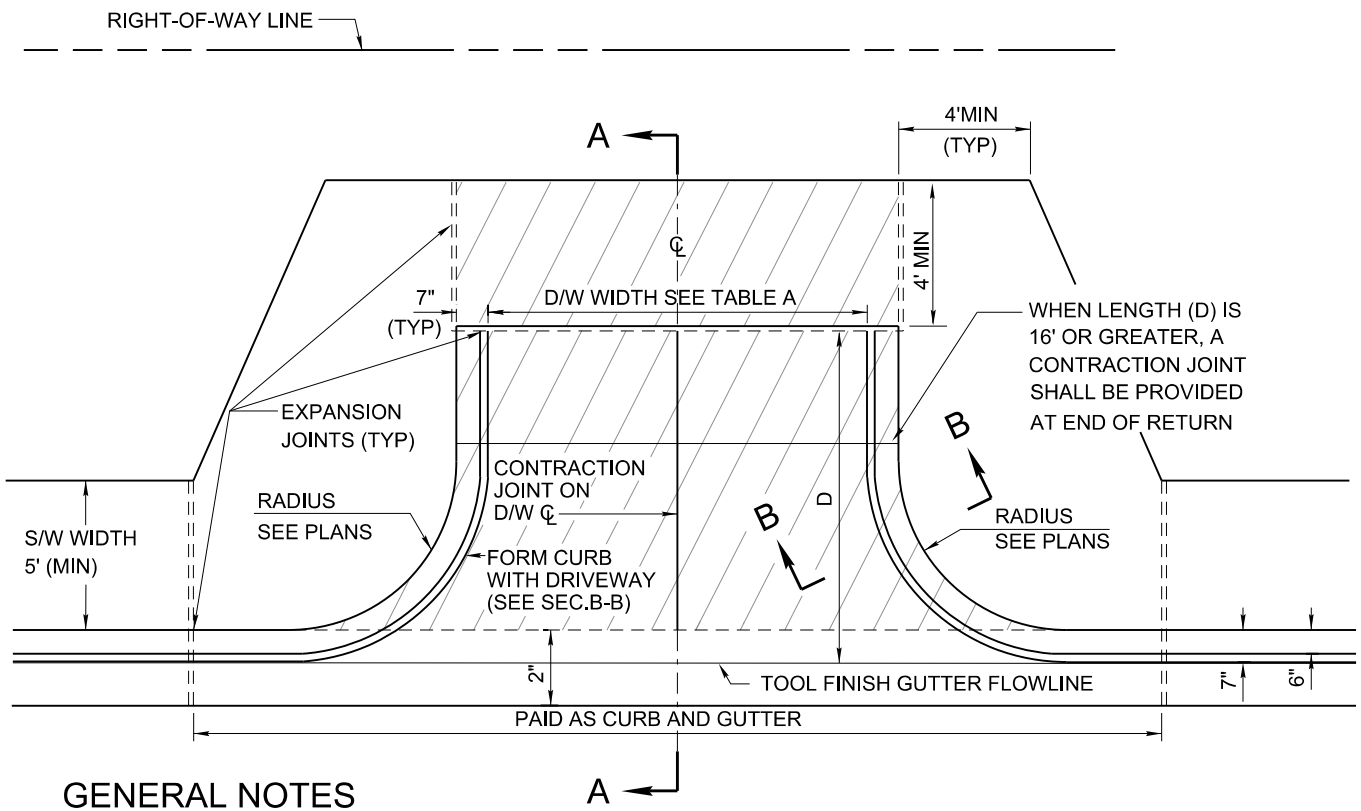

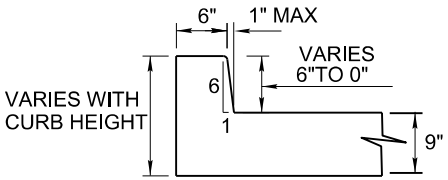

D/W CURB
SECTION B-B

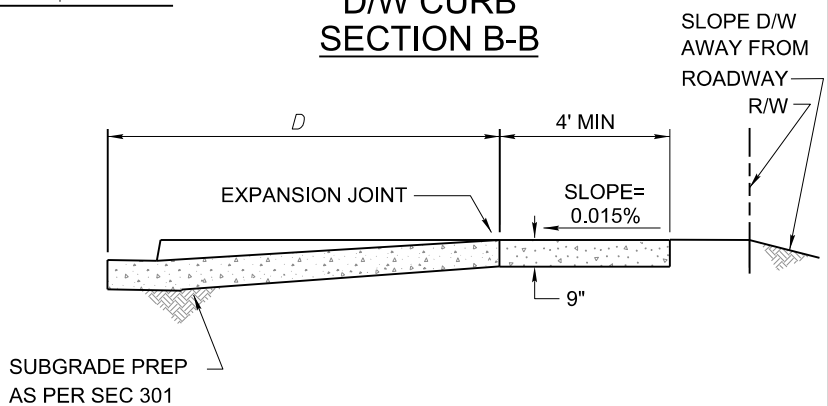

SECTION A-A

GENERAL NOTES

1. THIS TYPE D/W TO BE USED ONLY UPON APPROVAL OF TRANSPORTATION AGENCY.
2. EXPANSION JOINT FILLER SHALL BE ½" BITUMINOUS TYPE PERFORMED EXPANSION JOINT FILLER, ASTM D175I.
3. CONCRETE: CLASS A.
4. HATCHED AREA REPRESENTS DRIVEWAY PAYMENT AREA.

MARICOPA COUNTY DEPARTMENT OF TRANSPORTATION	RETURN TYPE DRIVEWAYS WITH ATTACHED SIDEWALK	DATE:	DETAIL NO.
STANDARD DETAIL		12/17/2019	2036-2

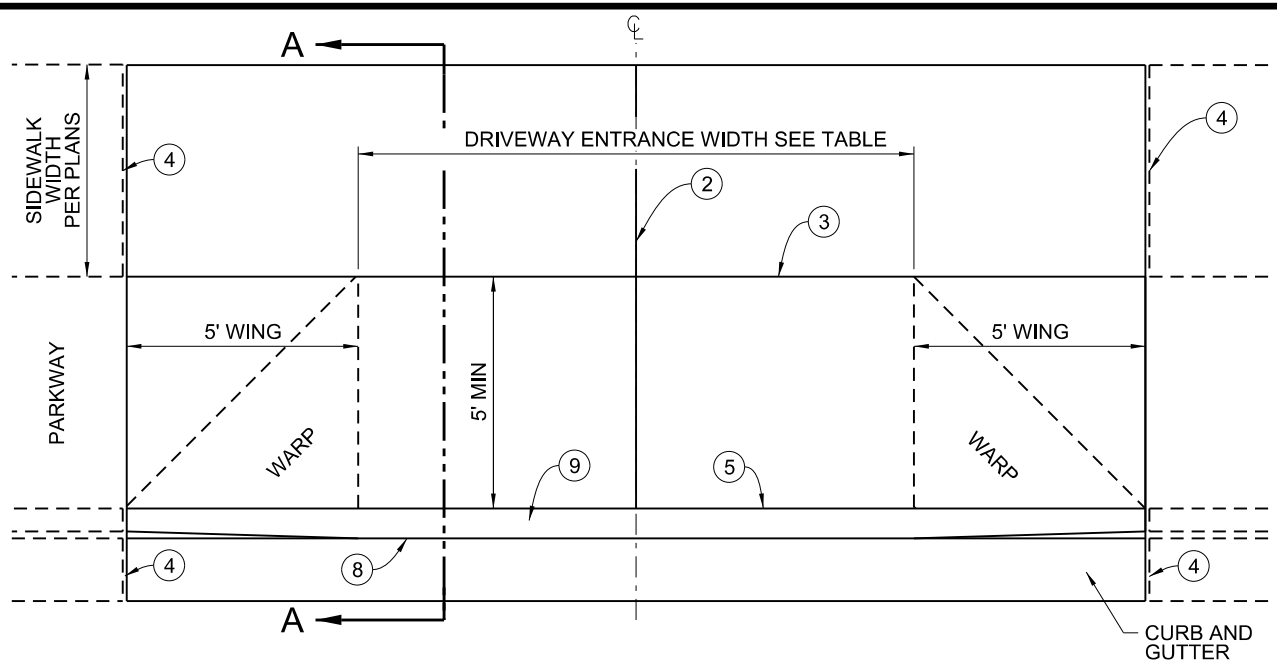

DRIVEWAY WITH DETACHED SIDEWALK

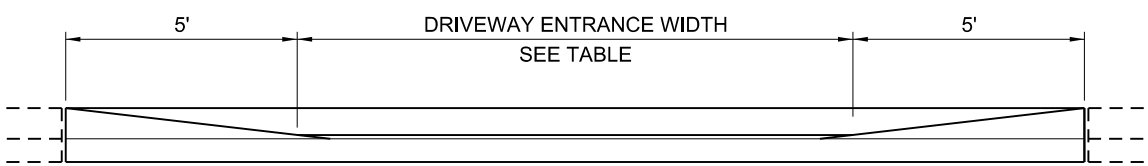

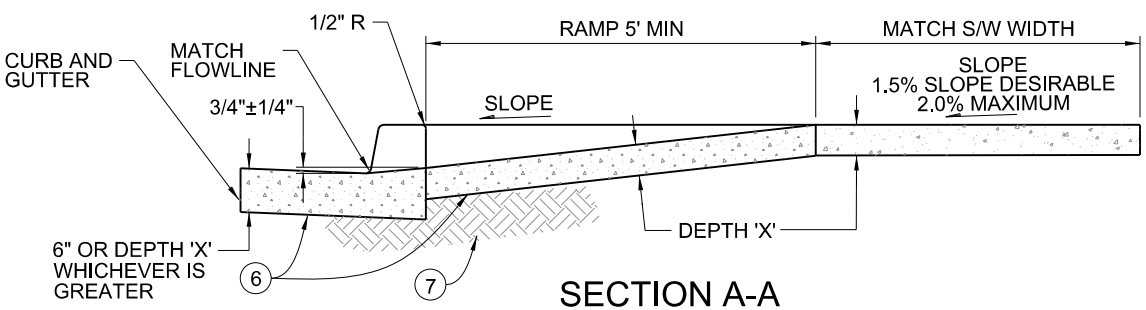

SECTION A-A

NOTES:

1. DEPRESSED CURB SHALL BE PAID FOR AT THE UNIT PRICE BID FOR THE TYPE OF CURB USED AT THAT LOCATION.
2. CONTRACTION JOINT ON D/W CENTERLINE.
3. CONTRACTION JOINT.
4. 1/2-INCH EXPANSION JOINTS SHALL COMPLY WITH SECTION 340.
5. BACK OF CURB - CONSTRUCTION JOINT.
6. CONCRETE CLASS AS NOTED IN TABLE. CONCRETE PER SECTION 725.
7. SUBGRADE PREPARATION, SECT. 301.
8. FLOW LINE OF GUTTER.
9. DEPRESSED CURB.
10. SECT. A-A AND ELEVATION: D/W SHOWN WITH VERTICAL CURB AND GUTTER, ROLL TYPE CURB AND GUTTER TREATED SIMILARLY.
11. ROUGH BROOM FINISH FULL WIDTH OF RAMP AND WINGS.
12. TROWEL AND USE LIGHT HAIR BROOM FINISH FOR WALKWAY AREA.
13. 'DRIVEWAY ENTRANCE WIDTH' IS THE DRIVEWAY WIDTH PLUS ADDITIONAL WIDENING REQUIRED.
14. ELEVATION AT TOP OF DRIVEWAY RAMP SHALL BE EQUAL TO OR HIGHER THAN NORMAL CURB ELEVATION.

SINGLE FAMILY RESIDENTIAL				
DRIVEWAY ENTRANCE WIDTH	MIN.	MAX.	CLASS	DEPTH 'X'
ALL CLASSIFICATIONS	16'	30'	B	5"
MULTI-FAMILY (2 TO 50 UNITS)				
LOCAL/MINOR COLLECTOR	30'	30'	A	9"
MAJOR COLLECTOR/ARTERIAL	36'	*40'	A	9"
COMMERCIAL/INDUSTRIAL/MULTI-FAMILY (50+ UNITS)				
ALL CLASSIFICATIONS	24'	40'	A	9"

*IF LEFT TURN LANE PROVIDED

MARICOPA COUNTY DEPARTMENT OF TRANSPORTATION	DRIVEWAY ENTRANCES WITH DETACHED SIDEWALK	DATE:	DETAIL NO.
STANDARD DETAIL		12/17/2019	2050-1

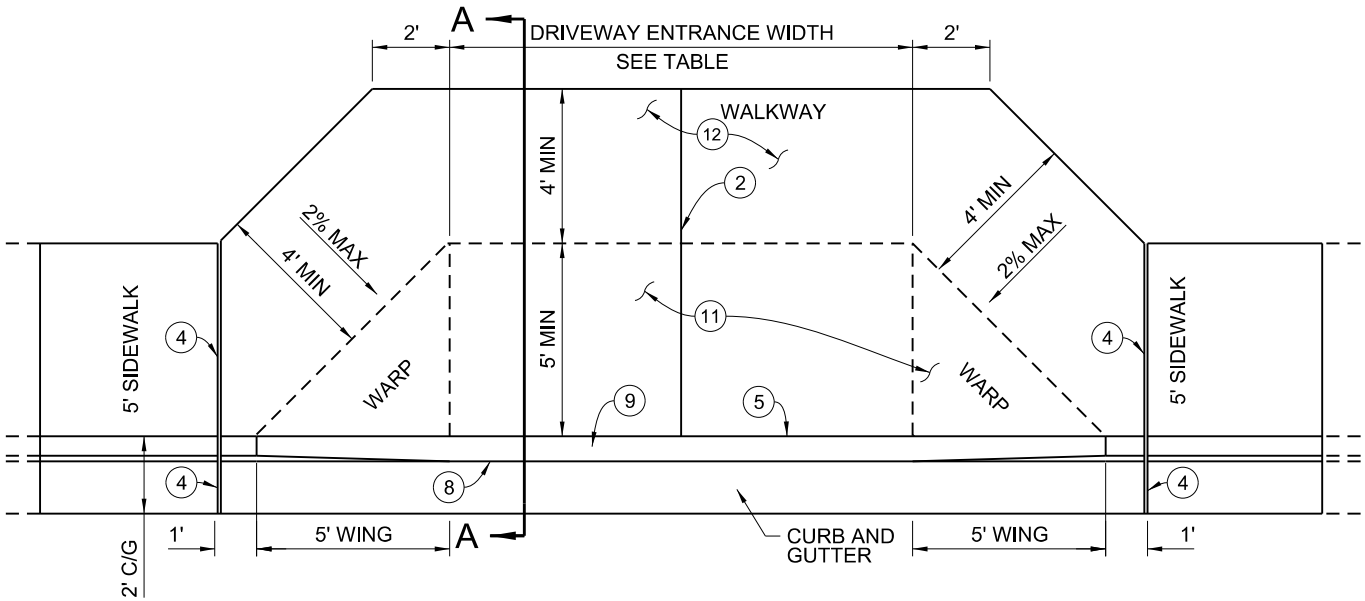

DRIVEWAY WITH SIDEWALK ATTACHED TO CURB

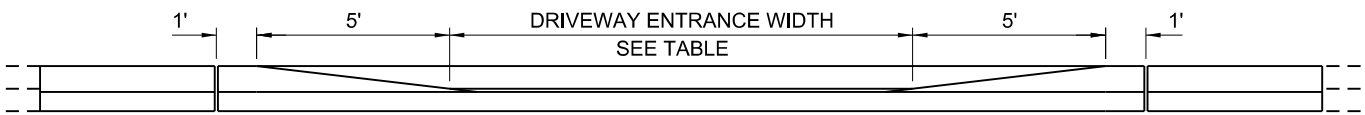

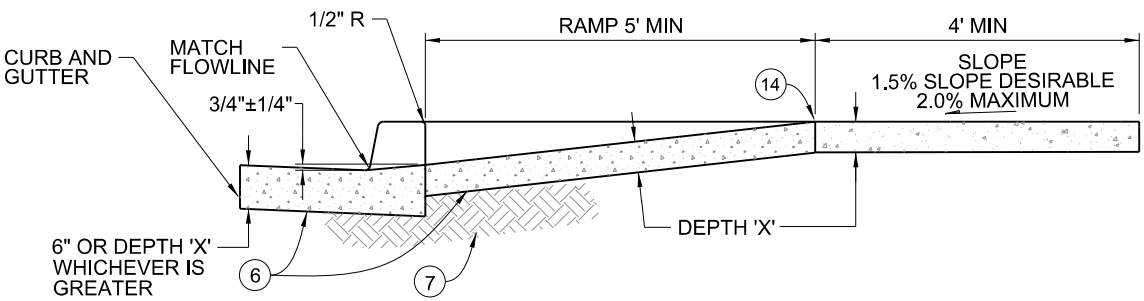

SECTION A-A

NOTES:

1. DEPRESSED CURB SHALL BE PAID FOR AT THE CONTRACT UNIT PRICE FOR THE TYPE OF CURB USED AT THAT LOCATION.
2. CONTRACTION JOINT(S) FOR DRIVEWAY ENTRANCE: WIDTH LESS THAN 22' NONE REQUIRED; WIDTH GREATER THAN 22' AND LESS THAN 30' LOCATE SINGLE JOINT ON D/W CENTERLINE; WIDTH OF 30' OR GREATER LOCATE TWO JOINTS TO EQUALLY DIVIDE THE DRIVEWAY ENTRANCE WIDTH.
3. DETAIL GEOMETRICS ARE BASED ON A CURB HEIGHT OF SIX INCHES (6"), AN ATTACHED SIDEWALK WIDTH OF FIVE FEET (5'), AND A DRIVEWAY RAMP LENGTH NOT EXCEEDING SIX FEET (6'). GEOMETRIC MODIFICATIONS MAY BE REQUIRED WHEN CONDITIONS ARE MODIFIED.
4. 1/2-INCH EXPANSION JOINTS SHALL COMPLY WITH SECTION 340.
5. BACK OF CURB - CONSTRUCTION JOINT.
6. CONCRETE CLASS AS NOTED IN TABLE. CONCRETE PER SECTION 725.
7. SUBGRADE PREPARATION, SECT. 301.
8. FLOW LINE OF GUTTER.
9. DEPRESSED CURB.
10. SECT. A-A AND ELEVATION: D/W SHOWN WITH VERTICAL CURB AND GUTTER, ROLL TYPE CURB AND GUTTER TREATED SIMILARLY.
11. ROUGH BROOM FINISH FULL WIDTH OF RAMP AND WINGS.
12. TROWEL AND USE LIGHT HAIR BROOM FINISH FOR WALKWAY AREA.
13. 'DRIVEWAY ENTRANCE WIDTH' IS THE DRIVEWAY WIDTH PLUS ADDITIONAL WIDENING REQUIRED.
14. ELEVATION AT TOP OF DRIVEWAY RAMP SHALL BE EQUAL TO OR HIGHER THAN NORMAL CURB ELEVATION.

SINGLE FAMILY RESIDENTIAL				
DRIVEWAY ENTRANCE WIDTH	MIN.	MAX.	CLASS	DEPTH 'X'
ALL CLASSIFICATIONS	16'	30'	B	5"
MULTI-FAMILY (2 TO 50 UNITS)				
LOCAL/MINOR COLLECTOR	30'	30'	A	9"
MAJOR COLLECTOR/ARTERIAL	36'	*40'	A	9"
COMMERCIAL/INDUSTRIAL/MULTI-FAMILY (50+ UNITS)				
ALL CLASSIFICATIONS	24'	40'	A	9"

*IF LEFT TURN LANE PROVIDED

MARICOPA COUNTY DEPARTMENT OF TRANSPORTATION	DRIVEWAY ENTRANCES WITH SIDEWALK ATTACHED TO CURB	DATE:	DETAIL NO.
STANDARD DETAIL		12/16/2019	2050-2

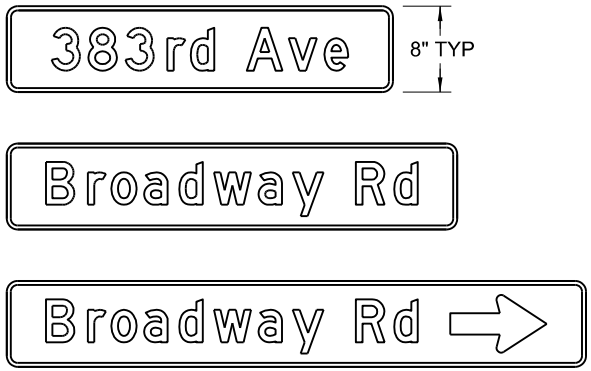

STREET NAME SIGN BLANK FOR SPEED LIMIT OF 25 MPH OR LESS

SERIES "D" LETTERING

SEE DETAIL 2054-1A

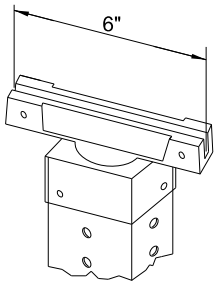

DETAIL "A"
STREET NAME SIGN BRACKET
TO SQUARE TUBE POST
(MCDOT DETAIL 2062-1)

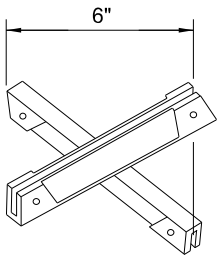

DETAIL "B"
SIGN TO SIGN BRACKET
(MCDOT DETAIL 2062-2)

NOTES:

1. SIGN LENGTHS SHALL BE DETERMINED BY THE NUMBER OF LETTERS AND SPACING REQUIREMENTS.
2. ALL SIGNS SHALL BE FABRICATED WITH 4 INCH WHITE UPPER-CASE AND LOWER-CASE LETTERS.
3. DIAMOND GRADE (TYPE IX OR TYPE XI) SHEETING SHALL BE USED FOR ALL LETTERS AND BACKGROUND.
4. BACKGROUND COLOR SHALL BE:
   BLUE - PRIVATE ROADWAYS
   GREEN - OPEN AND DECLARED PUBLIC ROADS
5. ALL SIGNS SHALL BE MOUNTED ON 2.6 LB/FT SQUARE PERFORATED SIGN POST.
6. THICKNESS OF ALL SIGN BLANKS SHALL BE 0.125 INCHES.
7. SQUARE TUBING SHALL BE ASSEMBLED AS SHOWN IN MCDOT STANDARD DETAIL 2058.
8. SIGNS SHALL BE INSTALLED PER STANDARD LOCATION SHOWN BELOW LEFT.
9. ALL DIMENSIONS ARE IN INCHES, EXCEPT AS NOTED.
10. REFER TO MCDOT STANDARD DETAIL 2061-10A FOR SIGN BLANKS.
11. USE GRADE # 2, ZINC COATED, 18 NC THREAD, 3" X 5/16" BOLT WITH FLAT WASHER UNDER NUT AND FLAT WASHER UNDER HEAD TO ATTACH SIGN TO BRACKET.

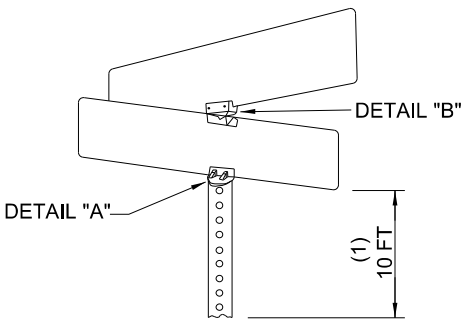

HEIGHT TO BOTTOM OF SIGN

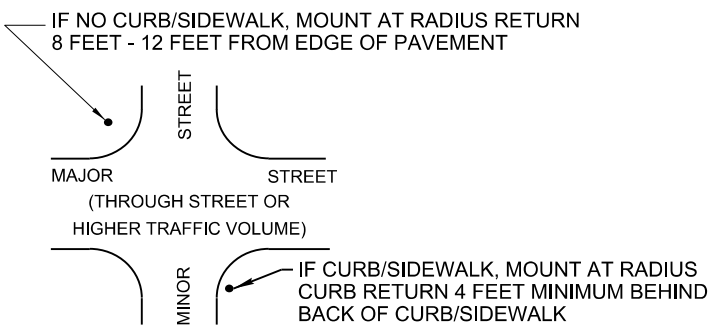

STANDARD LOCATION OF
STREET NAME SIGNS

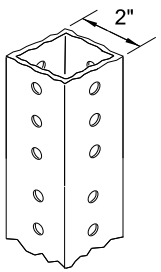

SQUARE TUBE POST
(2.6 LB./FT)

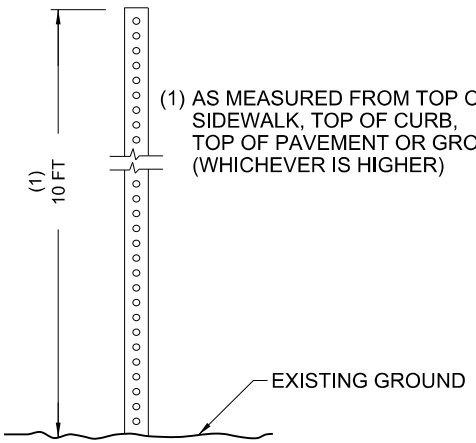

SIGN POST INSTALLATION

MARICOPA COUNTY DEPARTMENT OF TRANSPORTATION	STREET NAME SIGN INSTALLATION DETAILS POSTED SPEED LIMIT OF 25 MPH OR LESS	DATE:	DETAIL NO.
STANDARD DETAIL		12/2016	2054-1

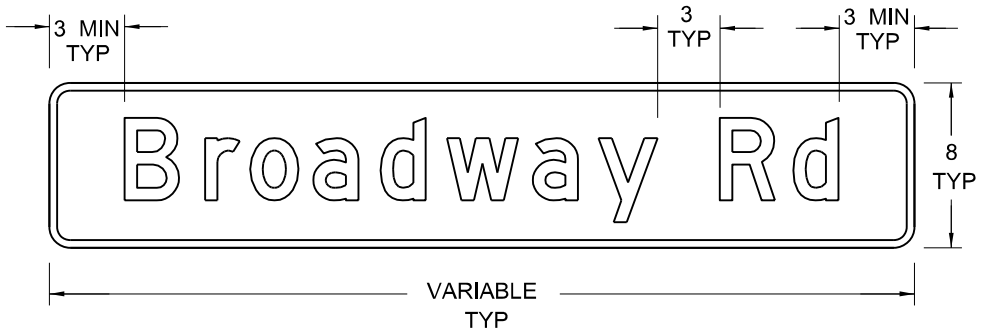

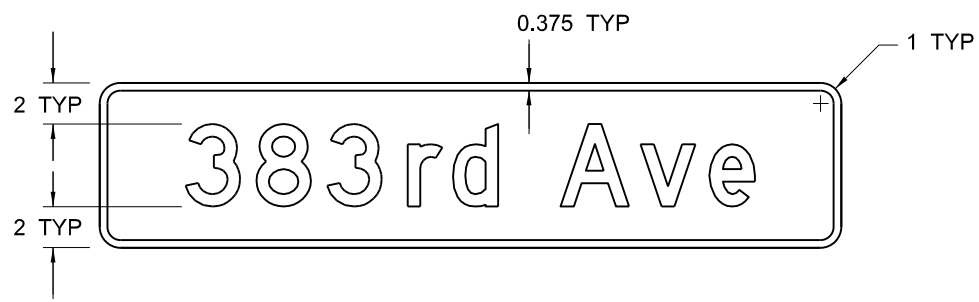

NOTES:

1. SERIES "D" LETTERING (STANDARD HIGHWAY SIGNS AS PUBLISHED BY FHWA)

2. ALL SIGNS SHALL BE FABRICATED WITH 4 INCH WHITE UPPER-CASE AND LOWER-CASE LETTERS.

3. DIAMOND GRADE (TYPE IX OR TYPE XI) SHEETING SHALL BE USED FOR ALL LETTERS AND BACKGROUND.

4. BACKGROUND COLOR SHALL BE:
   BLUE - PRIVATE ROADWAYS
   GREEN - OPEN AND DECLARED PUBLIC ROADS

5. WHEN THERE IS A DECENDING LETTER TAIL IN A ROAD NAME THE ENTIRE NAME IS SHIFTED UP WITHIN THE BLANK TO ALLOW SPACE FOR THE DECENDING LETTER. THE OFFSET TO THE INITIAL UPPER-CASE LETTER IS A SET DISTANCE WITHIN A 8" HIGH BLANK OF 2.25 INCHES FROM THE BOTTOM OF THE BLANK AND 1.75 INCHES FROM THE TOP OF THE BLANK. ALL OTHER ROAD NAMES SHALL BE CENTERED VERTICALLY WITHIN THE BLANK.

6. SEE LATEST VERSION OF STANDARD HIGHWAY SIGNS MANUAL FOR STANDARD ARROW DETAILS.

(ALL DIMENSIONS ARE IN INCHES)

MARICOPA COUNTY DEPARTMENT OF TRANSPORTATION	STREET NAME SIGN LAYOUT FOR POSTED SPEED LIMIT OF 25 MPH OR LESS	DATE:	DETAIL NO.
STANDARD DETAIL		12/2016	2054-1A

STREET NAME SIGN BLANK FOR SPEED LIMIT OF 30 MPH AND GREATER

SERIES "D" LETTERING

SEE DETAIL 2054-2A

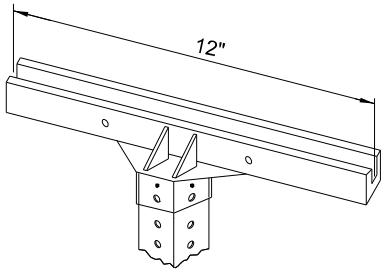

DETAIL "A"
STREET NAME SIGN BRACKET
TO SQUARE TUBE POST
(MCDOT DETAIL 2062-5)

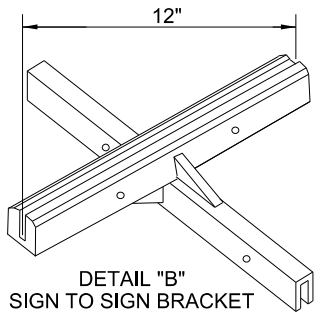

DETAIL "B"
SIGN TO SIGN BRACKET
(MCDOT DETAIL 2062-6)

NOTES:

1. SIGN LENGTHS SHALL BE DETERMINED BY THE NUMBER OF LETTERS AND SPACING REQUIREMENTS.
2. ALL SIGNS SHALL BE FABRICATED WITH 6 INCH WHITE UPPER-CASE AND LOWER-CASE LETTERS.
3. DIAMOND GRADE (TYPE IX OR TYPE XI) SHEETING SHALL BE USED FOR ALL LETTERS AND BACKGROUND.
4. BACKGROUND COLOR SHALL BE:
   BLUE - PRIVATE ROADWAYS
   GREEN - OPEN AND DECLARED PUBLIC ROADS
5. ALL SIGNS SHALL BE MOUNTED ON A 2.6 LB/FT SQUARE PERFORATED SIGN POST.
6. THICKNESS OF ALL SIGN BLANKS SHALL BE 0.125 INCHES.
7. SQUARE TUBING SHALL BE ASSEMBLED AS SHOWN IN MCDOT STANDARD DETAIL 2058.
8. SIGNS SHALL BE INSTALLED PER STANDARD LOCATION SHOWN BELOW LEFT.
9. ALL DIMENSIONS ARE IN INCHES, EXCEPT AS NOTED.
10. REFER TO MCDOT STANDARD DETAIL 2061-10B FOR SIGN BLANKS.
11. USE GRADE #2, ZINC COATED, 18 NC THREAD, 3" X 5/16" BOLT WITH FLAT WASHER UNDER NUT AND FLAT WASHER UNDER HEAD TO ATTACH SIGN TO BRACKET.

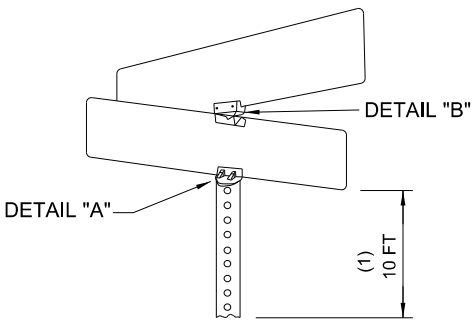

HEIGHT TO BOTTOM OF SIGN

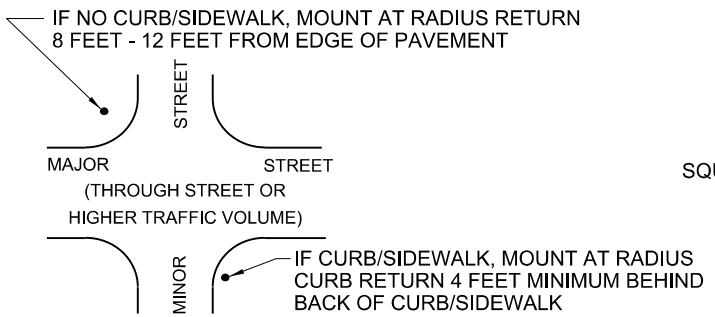

STANDARD LOCATION OF
STREET NAME SIGNS

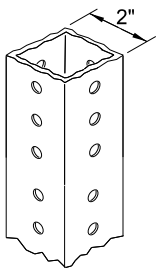

SQUARE TUBE POST
(2.6 LB./FT)

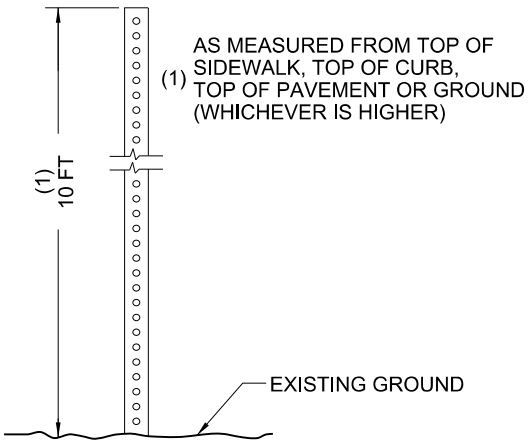

SIGN POST INSTALLATION

MARICOPA COUNTY DEPARTMENT OF TRANSPORTATION	STREET NAME SIGN INSTALLATION DETAILS POSTED SPEED LIMIT OF 30 MPH OR GREATER	DATE:	DETAIL NO.
STANDARD DETAIL		12/2016	2054-2

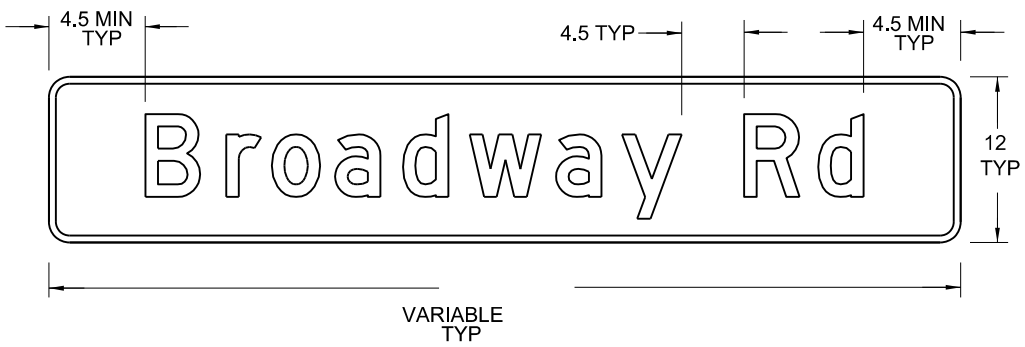

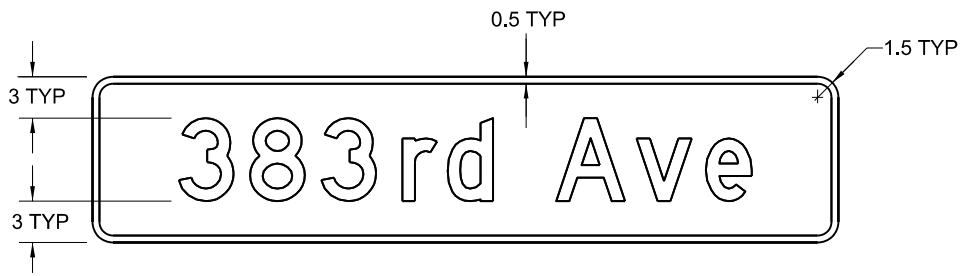

NOTES:

1. SERIES "D" LETTERING (STANDARD HIGHWAY SIGNS AS PUBLISHED BY FHWA)

2. ALL SIGNS SHALL BE FABRICATED WITH 6 INCH WHITE UPPER-CASE AND LOWER-CASE LETTERS.

3. DIAMOND GRADE (TYPE IX OR TYPE XI) SHEETING SHALL BE USED FOR ALL LETTERS AND BACKGROUND.

4. BACKGROUND COLOR SHALL BE:
   BLUE - PRIVATE ROADWAYS
   GREEN - OPEN AND DECLARED PUBLIC ROADS

5. WHEN THERE IS A DECENDING LETTER TAIL IN A ROAD NAME THE ENTIRE NAME IS SHIFTED UP WITHIN THE BLANK TO ALLOW SPACE FOR THE DECENDING LETTER. THE OFFSET TO THE INITIAL UPPER-CASE LETTER IS A SET DISTANCE WITHIN A 12" HIGH BLANK OF 3.25 INCHES FROM THE BOTTOM OF THE BLANK AND 2.75 INCHES FROM THE TOP OF THE BLANK. ALL OTHER ROAD NAMES SHALL BE CENTERED VERTICALLY WITHIN THE BLANK.

6. SEE LATEST VERSION OF STANDARD HIGHWAY SIGNS MANUAL FOR STANDARD ARROW DETAILS.

(ALL DIMENSIONS ARE IN INCHES)

MARICOPA COUNTY DEPARTMENT OF TRANSPORTATION	STREET NAME SIGN LAYOUT FOR POSTED SPEED LIMIT OF 30 MPH OR GREATER	DATE:	DETAIL NO.
STANDARD DETAIL		12/2016	2054-2A

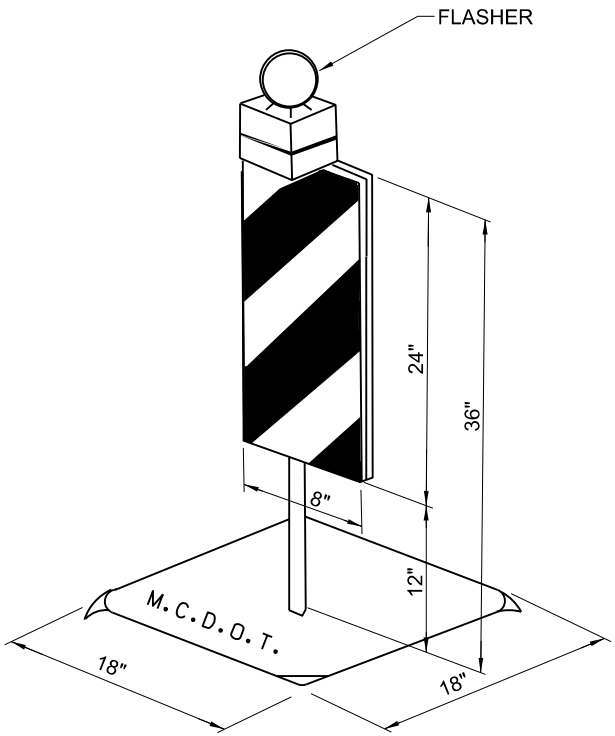

VERTICAL BARRICADE

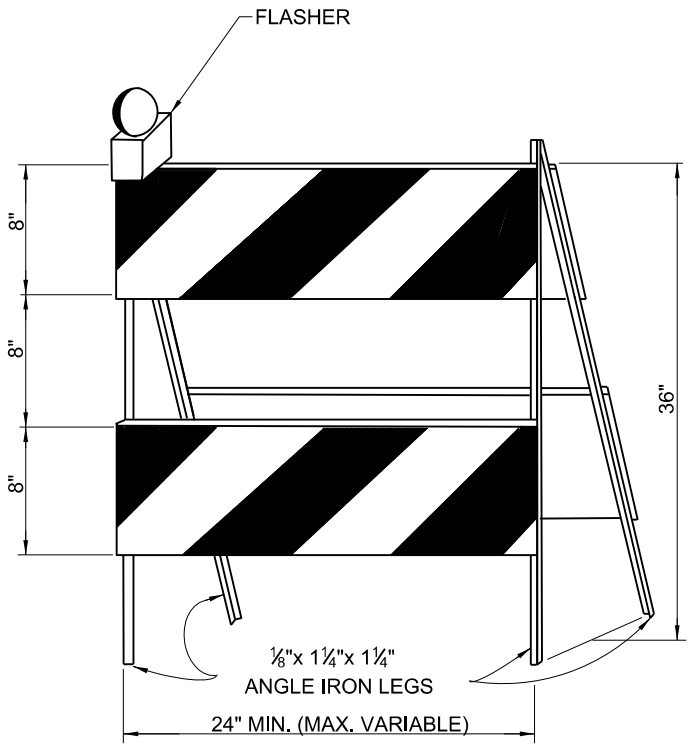

HINGED BARRICADE

NOTES:

1. PANELS TO BE CONSTRUCTED OF WOOD, METAL OR OTHER COMPONENTS OR A COMBINATION THEREOF: FRAME "A" TYPE.
2. STRIPES TO BE ALTERNATING ORANGE AND WHITE, 6" WIDTH AT 45° ANGLE IN THE DIRECTION TRAFFIC IS TO PASS.
3. THE ENTIRE AREA OF WHITE AND ORANGE SHALL BE REFLECTORIZED.
4. RAIL WIDTH: 8" MIN, 12" MAX
   RAIL LENGTH: 2' MIN, VARIABLE MAX
5. FLASHER TO BE 12 VOLT, HAVE A SOLAR SWITCH AND HAVE A CONCEALED MANUAL ON-OFF SWITCH. FLASHER LENS TO BE MIN 7" DIA, AMBER 2 WAY AND BE ABLE TO ROTATE 360°
6. ALL OTHER PARTS TO BE PAINTED WHITE.

MARICOPA COUNTY DEPARTMENT OF TRANSPORTATION	BARRICADE (PORTABLE)	DATE:	DETAIL NO.
STANDARD DETAIL		11/03/1993	2055

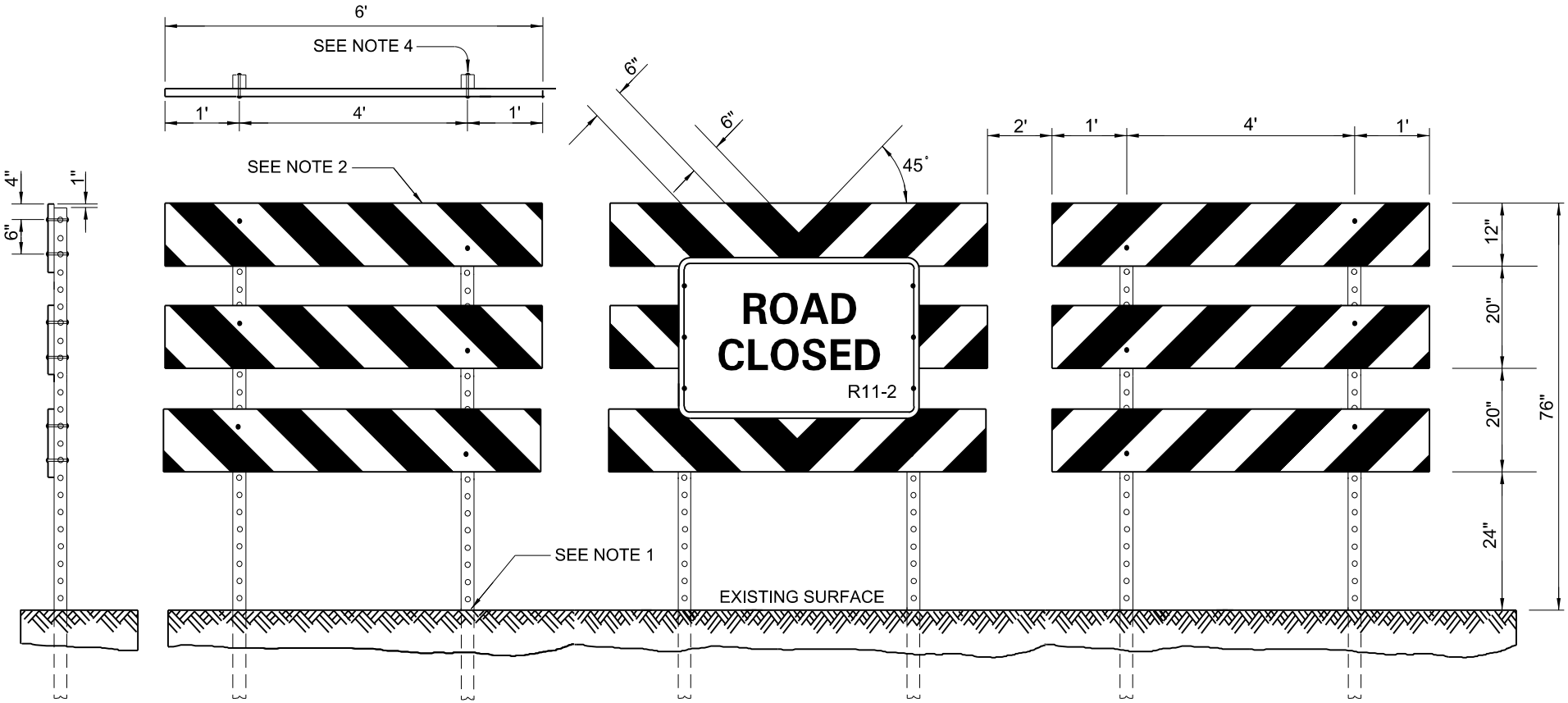

NOTES:

1. SEE STANDARD DETAIL # 2058 FOR SQUARE PERFORATED POST AND FOUNDATION DETAILS.

2. BARRICADE RAIL MARKINGS SHALL BE ALTERNATE RED AND WHITE DIAMOND GRADE RETROREFLECTIVE STRIPES (SLOPING DOWNWARD IN THE DIRECTION TRAFFIC IS TO PASS OR STOP).

3. USE 12" X 6' X .125 GAUGE ALUMINUM FOR THE BARRICADE RAILS.

4. USE GRADE # 2, ZINC COATED, 18 NC THREAD, 3" X 3/8 " BOLT WITH LOCK WASHER UNDER NUT AND FLAT WASHER UNDER HEAD; TO ATTACH BARRICADE RAILS AND SIGN TO SQUARE PERFORATED POST.

5. THE NUMBER OF TYPE III BARRICADES SHALL VARY TO OBTAIN THE DESIGNATED TOTAL BARRICADE WIDTH SHOWN ON THE PLANS.

MARICOPA COUNTY DEPARTMENT OF TRANSPORTATION	PERMANENT ROAD CLOSURE USING TYPE III BARRICADES	DATE:	DETAIL NO.
STANDARD DETAIL		12/2013	2057A

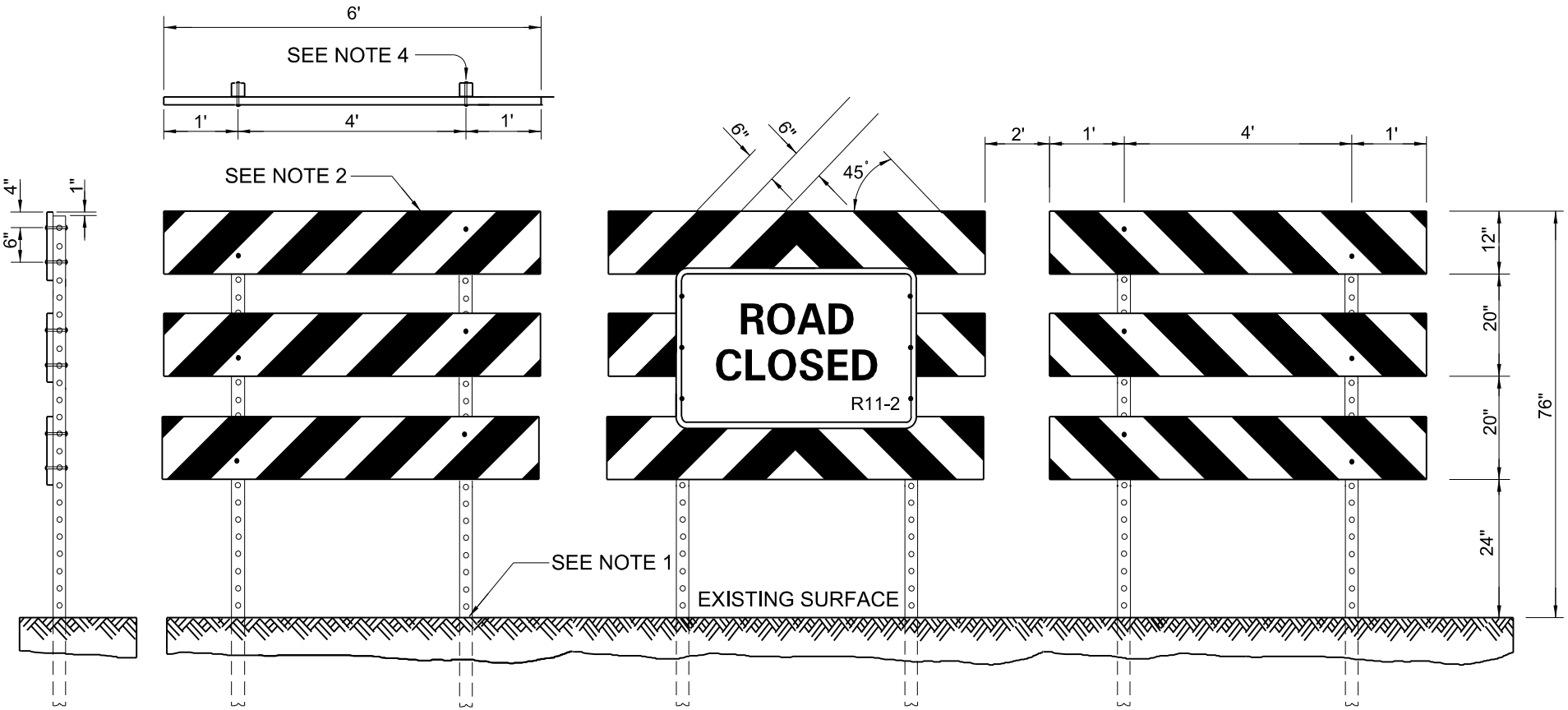

NOTES:

1. SEE STANDARD DETAIL # 2058 FOR SQUARE PERFORATED POST AND FOUNDATION DETAILS.
2. BARRICADE RAIL MARKINGS SHALL BE ALTERNATE RED AND WHITE DIAMOND GRADE RETROREFLECTIVE STRIPES (SLOPING DOWNWARD IN THE DIRECTION TRAFFIC IS TO PASS OR STOP).
3. USE 12" X 6' X .125 GAUGE ALUMINUM FOR THE BARRICADE RAILS.
4. USE GRADE # 2, ZINC COATED, 18 NC THREAD, 3" X 3/8" BOLT WITH LOCK WASHER UNDER NUT AND FLAT WASHER UNDER HEAD; TO ATTACH BARRICADE RAILS AND SIGN TO SQUARE PERFORATED POST.
5. THE NUMBER OF TYPE III BARRICADES SHALL VARY TO OBTAIN THE DESIGNATED TOTAL BARRICADE WIDTH SHOWN ON THE PLANS.

MARICOPA COUNTY DEPARTMENT OF TRANSPORTATION	PERMANENT ROAD CLOSURE USING TYPE III BARRICADES	DATE:	DETAIL NO.
STANDARD DETAIL		12/2013	2057B

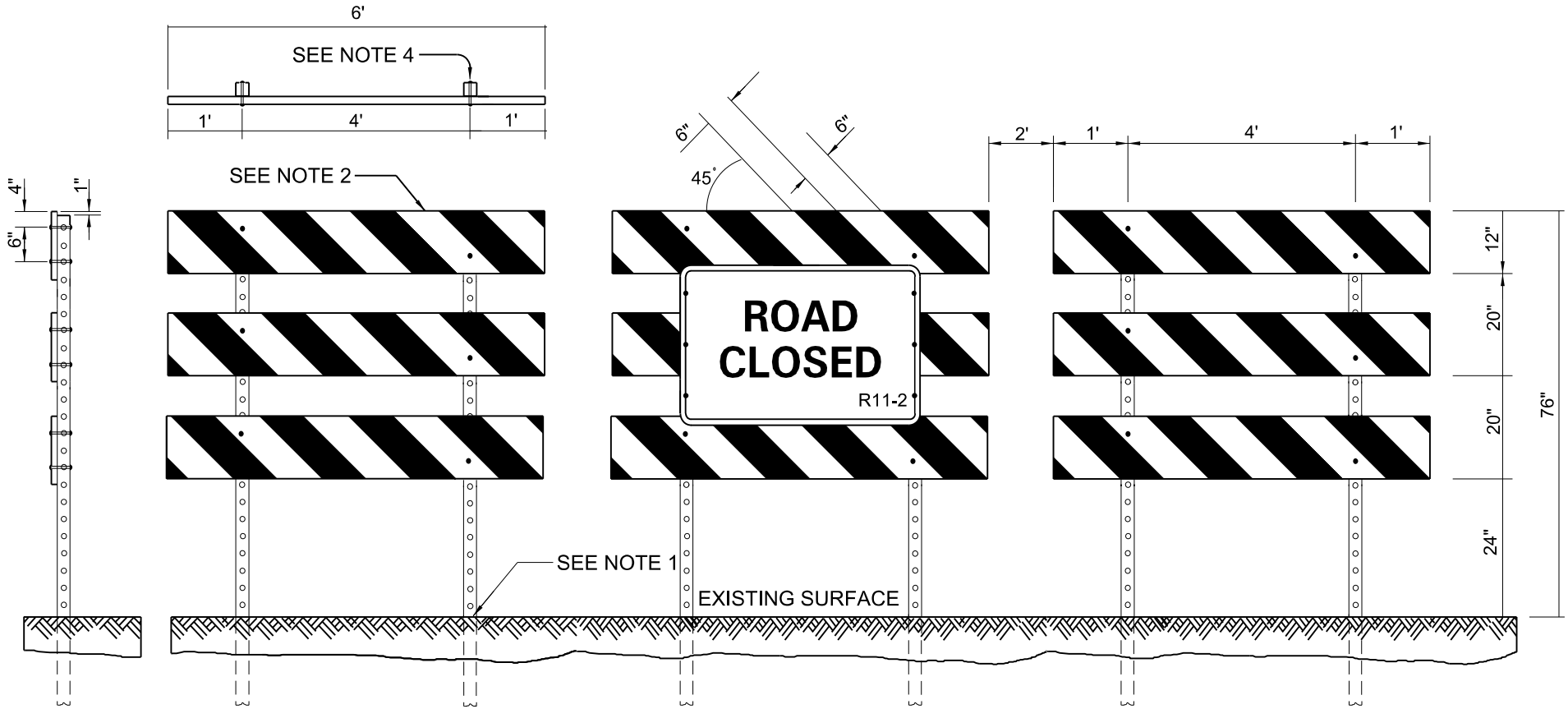

NOTES:

1. SEE STANDARD DETAIL # 2058 FOR SQUARE PERFORATED POST AND FOUNDATION DETAILS.
2. BARRICADE RAIL MARKINGS SHALL BE ALTERNATE RED AND WHITE DIAMOND GRADE RETROREFLECTIVE STRIPES (SLOPING DOWNWARD IN THE DIRECTION TRAFFIC IS TO PASS OR STOP).
3. USE 12" X 6' X .125 GAUGE ALUMINUM FOR THE BARRICADE RAILS.
4. USE GRADE # 2, ZINC COATED, 18 NC THREAD, 3" X 3/8" BOLT WITH LOCK WASHER UNDER NUT AND FLAT WASHER UNDER HEAD; TO ATTACH BARRICADE RAILS AND SIGN TO SQUARE PERFORATED POST.
5. THE NUMBER OF TYPE III BARRICADES SHALL VARY TO OBTAIN THE DESIGNATED TOTAL BARRICADE WIDTH SHOWN ON THE PLANS.

MARICOPA COUNTY DEPARTMENT OF TRANSPORTATION	PERMANENT ROAD CLOSURE USING TYPE III BARRICADES	DATE:	DETAIL NO.
STANDARD DETAIL		12/2013	2057C

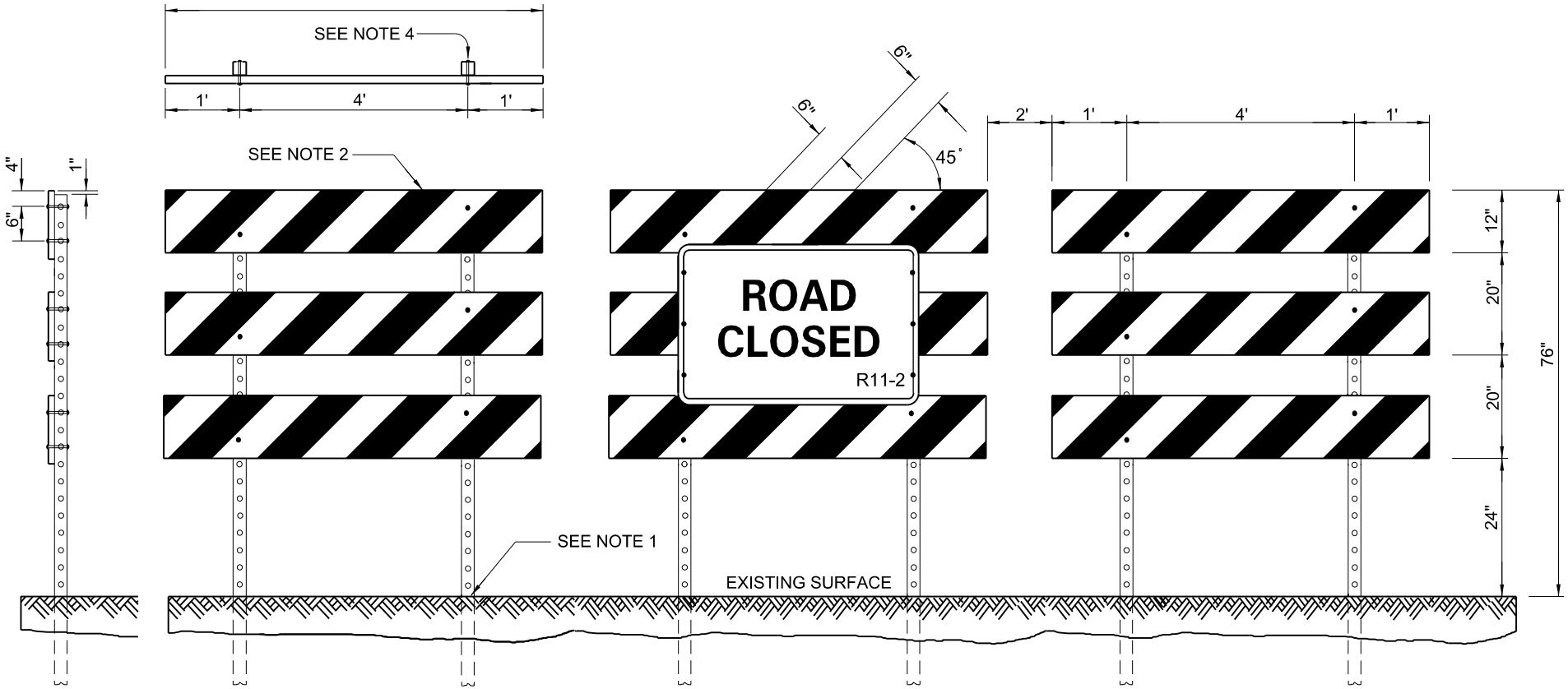

NOTES:

1. SEE STANDARD DETAIL # 2058 FOR SQUARE PERFORATED POST AND FOUNDATION DETAILS.
2. BARRICADE RAIL MARKINGS SHALL BE ALTERNATE RED AND WHITE DIAMOND GRADE RETROREFLECTIVE STRIPES (SLOPING DOWNWARD IN THE DIRECTION TRAFFIC IS TO PASS OR STOP).
3. USE 12" X 6' X .125 GAUGE ALUMINUM FOR THE BARRICADE RAILS.
4. USE GRADE # 2, ZINC COATED, 18 NC THREAD, 3" X 3/8" BOLT WITH LOCK WASHER UNDER NUT AND FLAT WASHER UNDER HEAD; TO ATTACH BARRICADE RAILS AND SIGN TO SQUARE PERFORATED POST.
5. THE NUMBER OF TYPE III BARRICADES SHALL VARY TO OBTAIN THE DESIGNATED TOTAL BARRICADE WIDTH SHOWN ON THE PLANS.

MARICOPA COUNTY DEPARTMENT OF TRANSPORTATION	PERMANENT ROAD CLOSURE USING TYPE III BARRICADES	DATE:	DETAIL NO.
STANDARD DETAIL		12/2013	2057D

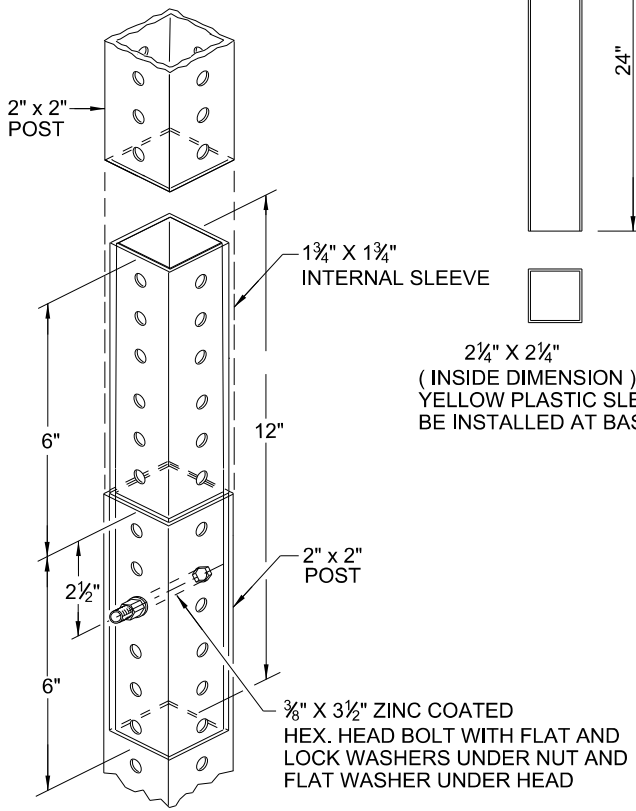

SINGLE POST PERMISSIBLE FIELD SPLICE
(NOT ALLOWED ON TELESCOPING POSTS)

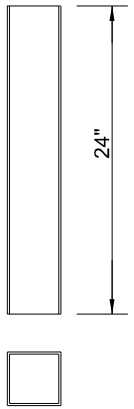

FOUNDATION
ANCHOR SLEEVE

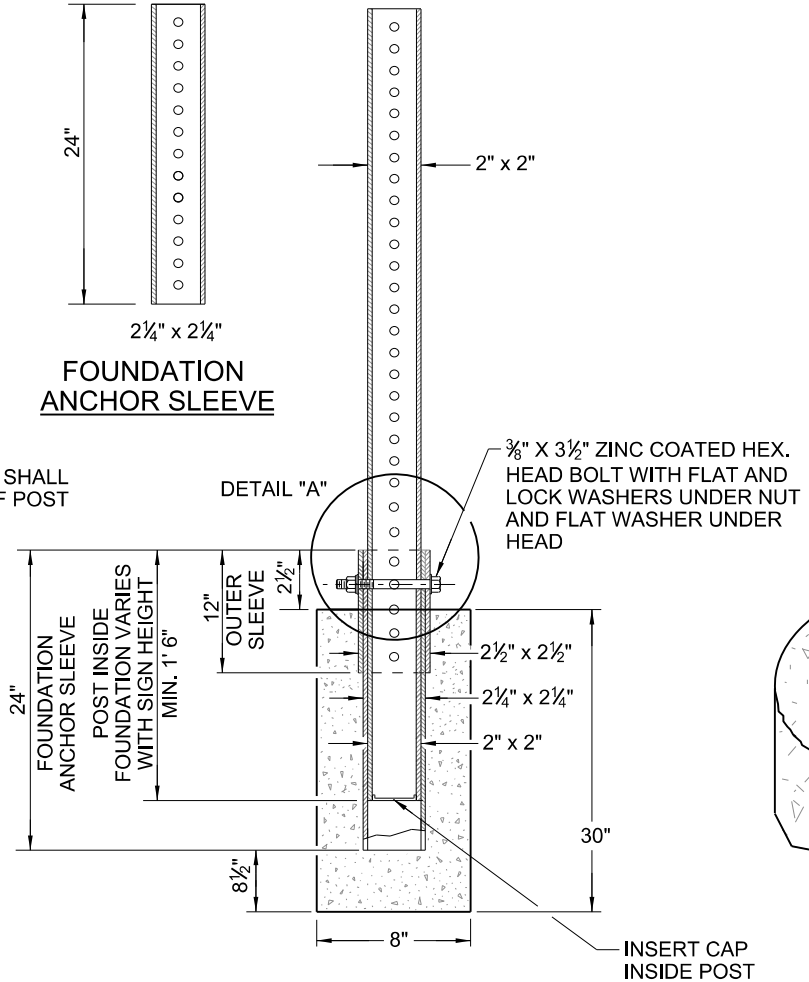

SINGLE POST FOUNDATION DETAIL

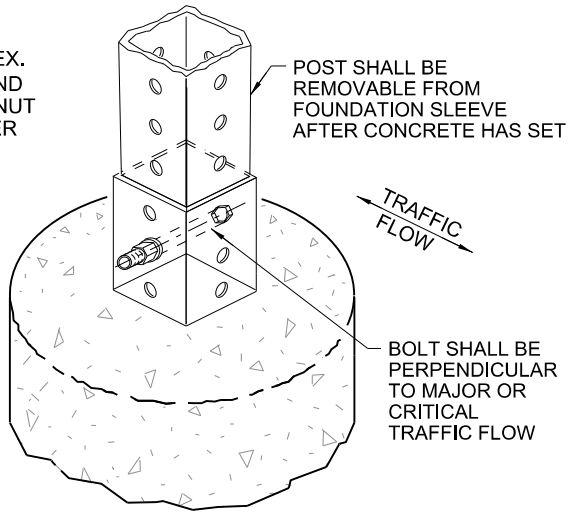

DETAIL "A"

NOTES:

1. IF ANY POST SECTION IS SHORTER THAN THE PANEL HEIGHT, THE FIELD SPLICE SHALL BE BEHIND THE PANEL.
2. FIELD SPLICES ARE NOT PERMITTED ON TELESCOPING POSTS.

NOTES:

1. ALL DIMENSIONS ARE IN INCHES, EXCEPT AS NOTED.
2. ALL SQUARE PERFORATED POSTS SHALL BE 2" X 2".
3. FOR ESTIMATING PURPOSES, CONCRETE QUANTITY PER POST IS 1.0 CU/FT.
4. A YELLOW PLASTIC SLEEVE SHALL BE INSTALLED AT THE BASE OF ALL SIGN POSTS.

MARICOPA COUNTY DEPARTMENT OF TRANSPORTATION	SQUARE PERFORATED SIGN POST, FOUNDATION & SPLICE DETAILS	DATE:	DETAIL NO.
STANDARD DETAIL		12/2013	2058

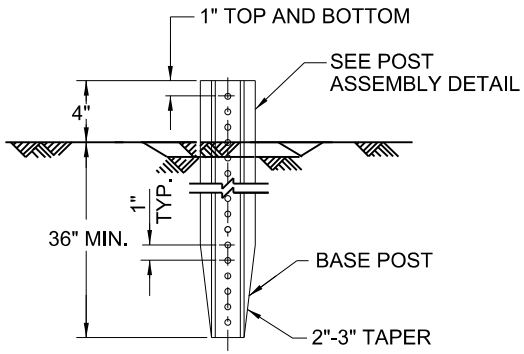

BASE POST AND INSTALLATION

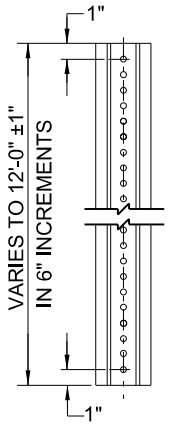

SIGN POST

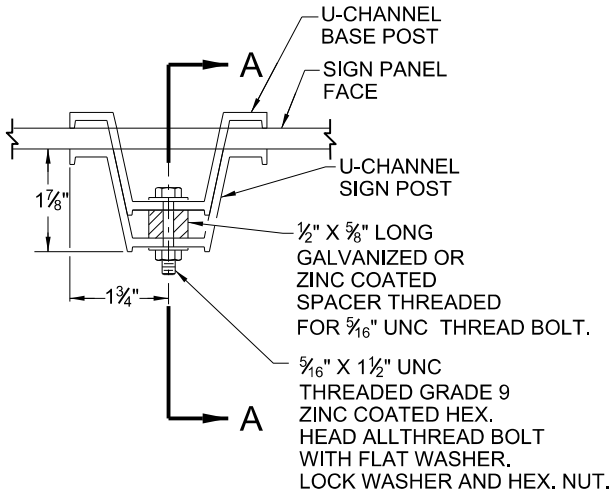

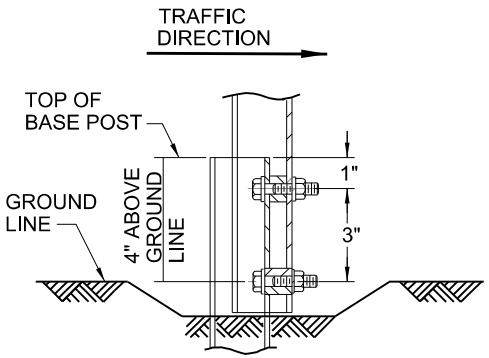

POST ASSEMBLY
SECT. A-A

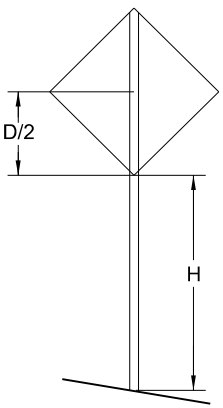

U-CHANNEL SELECTION

WIND SPEED= 70 MPH (3LBS. PER FT. POST)

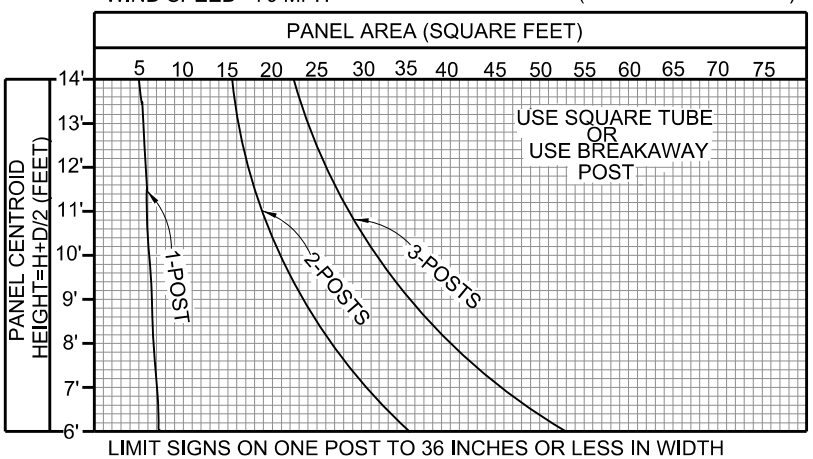

LIMIT SIGNS ON ONE POST TO 36 INCHES OR LESS IN WIDTH

NOTE: ALL DIMENSIONS IN INCHES EXCEPT AS NOTED.

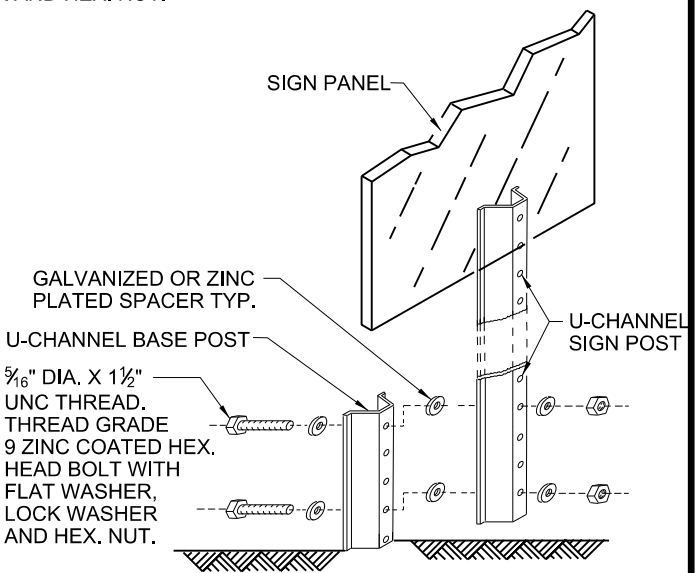

INSTALLATION PICTORIAL

MARICOPA COUNTY DEPARTMENT OF TRANSPORTATION	U-CHANNEL POST SELECTION AND INSTALLATION DETAILS	DATE:	DETAIL NO.
STANDARD DETAIL		07/2006	2059

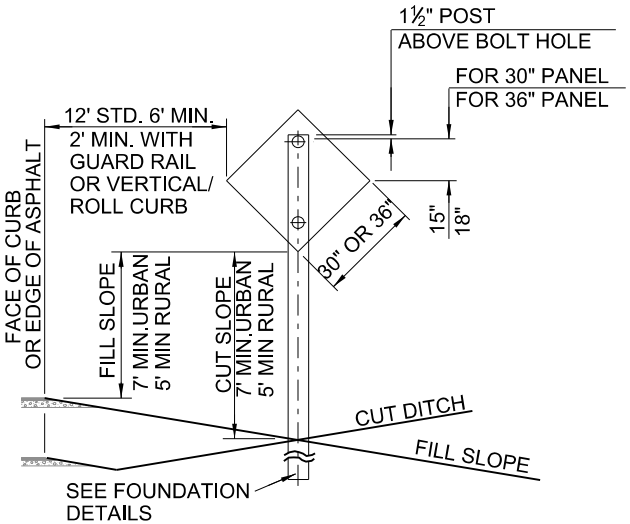

WARNING SIGN

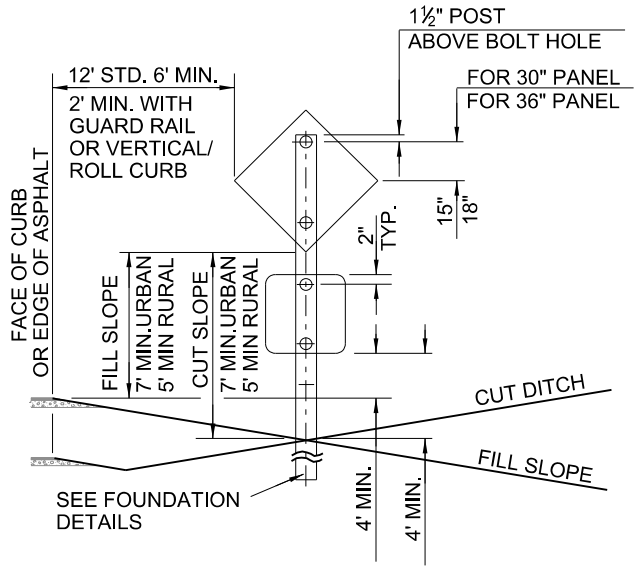

WARNING SIGN
WITH ADVISORY PLATE

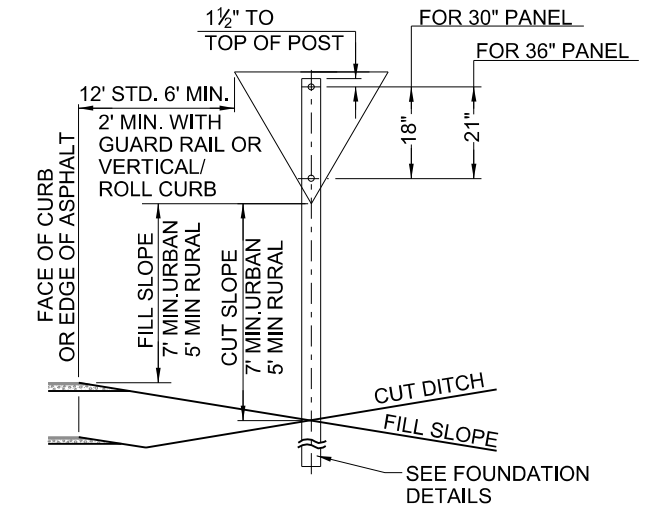

YIELD SIGN

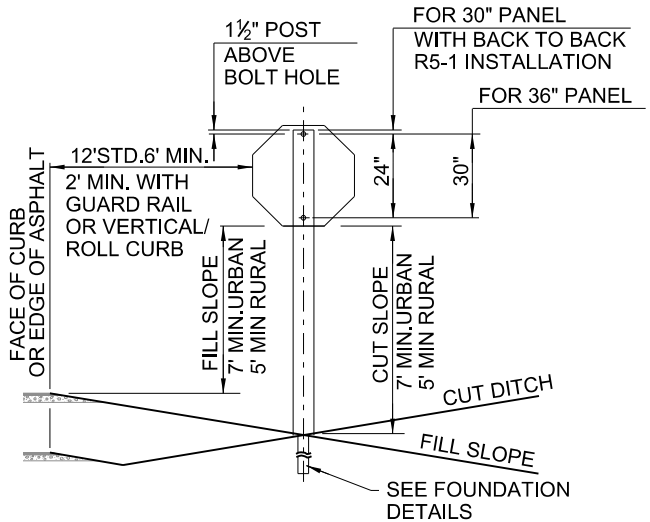

REGULATORY (STOP) SIGN

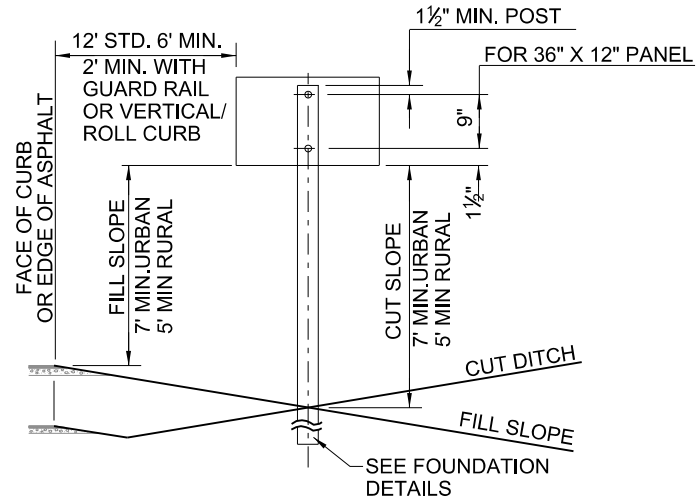

REGULATORY SIGN
SINGLE POST

NOTES:

1. SEE FHWA STANDARD HIGHWAY SIGNS BOOKLET FOR PANEL BOLT HOLE. SPACING NOT SHOWN.
2. ALL DIMENSIONS IN INCHES EXCEPT AS NOTED.
3. USE GRADE # 2, ZINC COATED, 18 NC THREAD, 3" X 5/16" BOLT WITH FLAT WASHER UNDER NUT AND FLAT WASHER UNDER HEAD. TO ATTACH SIGN TO BRACKET.

MARICOPA COUNTY DEPARTMENT OF TRANSPORTATION	OFFSETS, CLEARANCES AND MOUNTING DETAILS FOR SIGNS ON COUNTY ROADWAYS	DATE:	DETAIL NO.
STANDARD DETAIL		05/01/2004	2060-1

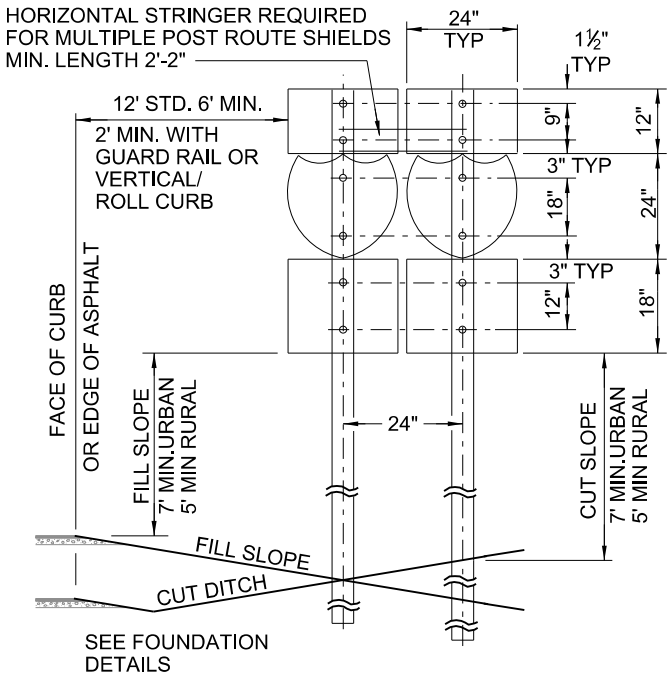

MULTIPLE ROUTE MARKER

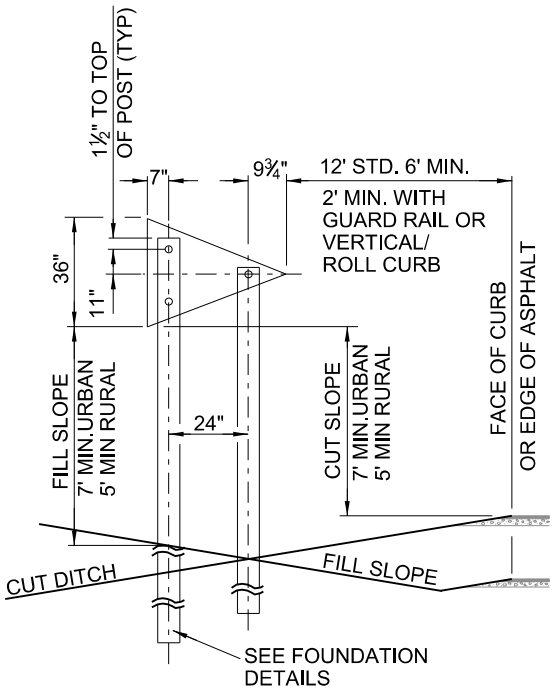

NO PASSING PENNANT

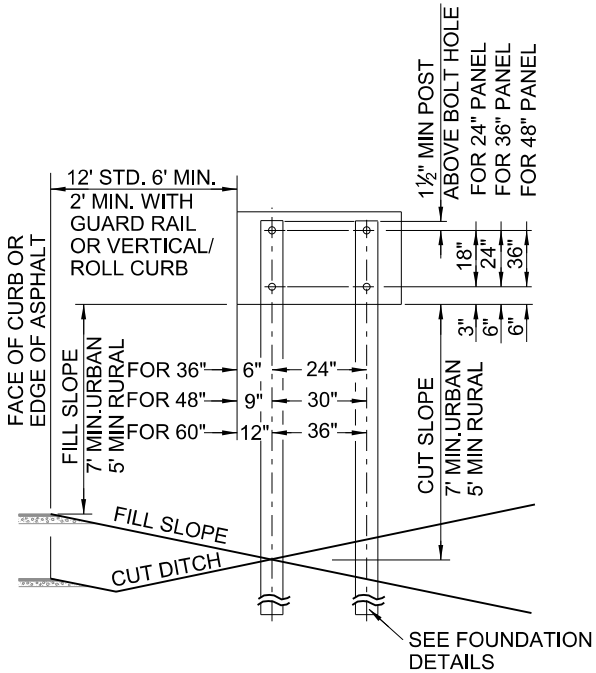

REGULATORY SIGN
TWO POST

NOTES:

1. SEE FHWA STANDARD HIGHWAY SIGNS BOOKLET FOR PANEL BOLT HOLE. SPACING NOT SHOWN.
2. ALL DIMENSIONS IN INCHES EXCEPT AS NOTED.
3. USE GRADE # 2, ZINC COATED, 18 NC THREAD, 3" X 5/16" BOLT WITH FLAT WASHER UNDER NUT AND FLAT WASHER UNDER HEAD. TO ATTACH SIGN TO BRACKET.

MARICOPA COUNTY DEPARTMENT OF TRANSPORTATION	OFFSETS, CLEARANCES AND MOUNTING DETAILS FOR SIGNS ON COUNTY ROADWAYS	DATE:	DETAIL NO.
STANDARD DETAIL		12/2009	2060-2

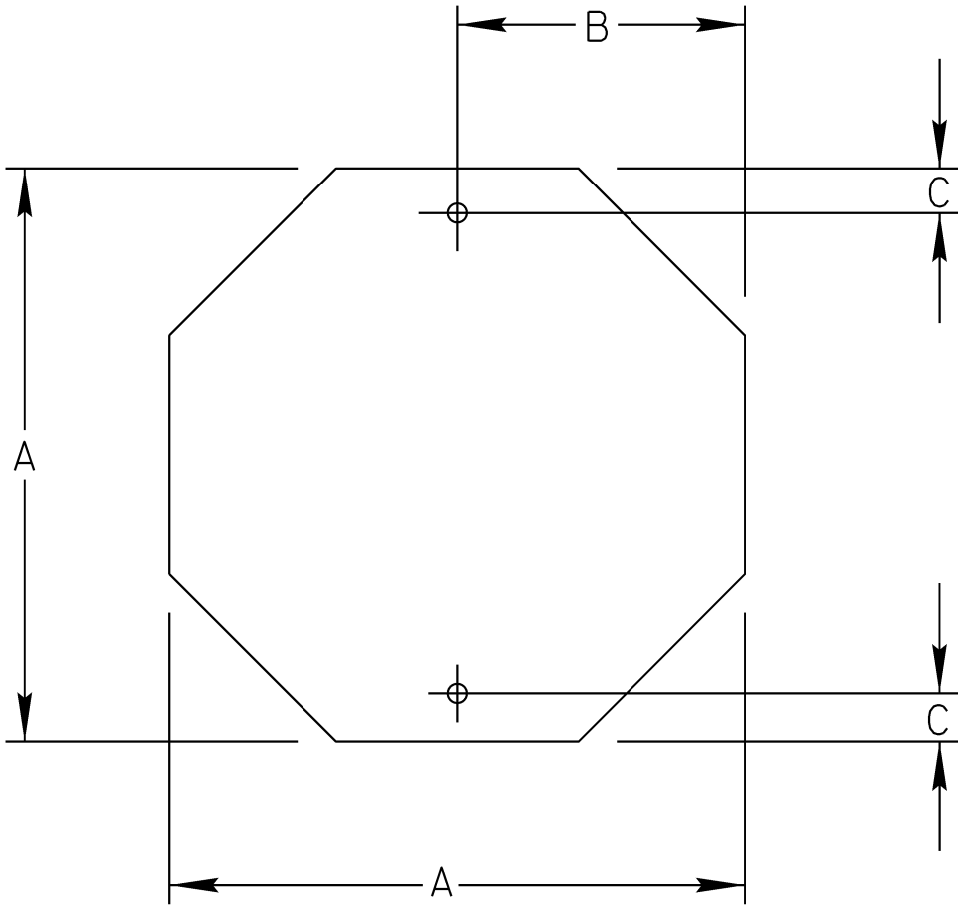

A	B	C	THICKNESS
30	15	3	.080
36	18	3	.100

(All dimensions are in inches)

Hole diameter is 3/8 inches unless otherwise noted

(Not to Scale)

MARICOPA COUNTY DEPARTMENT OF TRANSPORTATION STANDARD DETAIL	OCTAGON	DATE: 05/2004	DETAIL NO. 2061-1

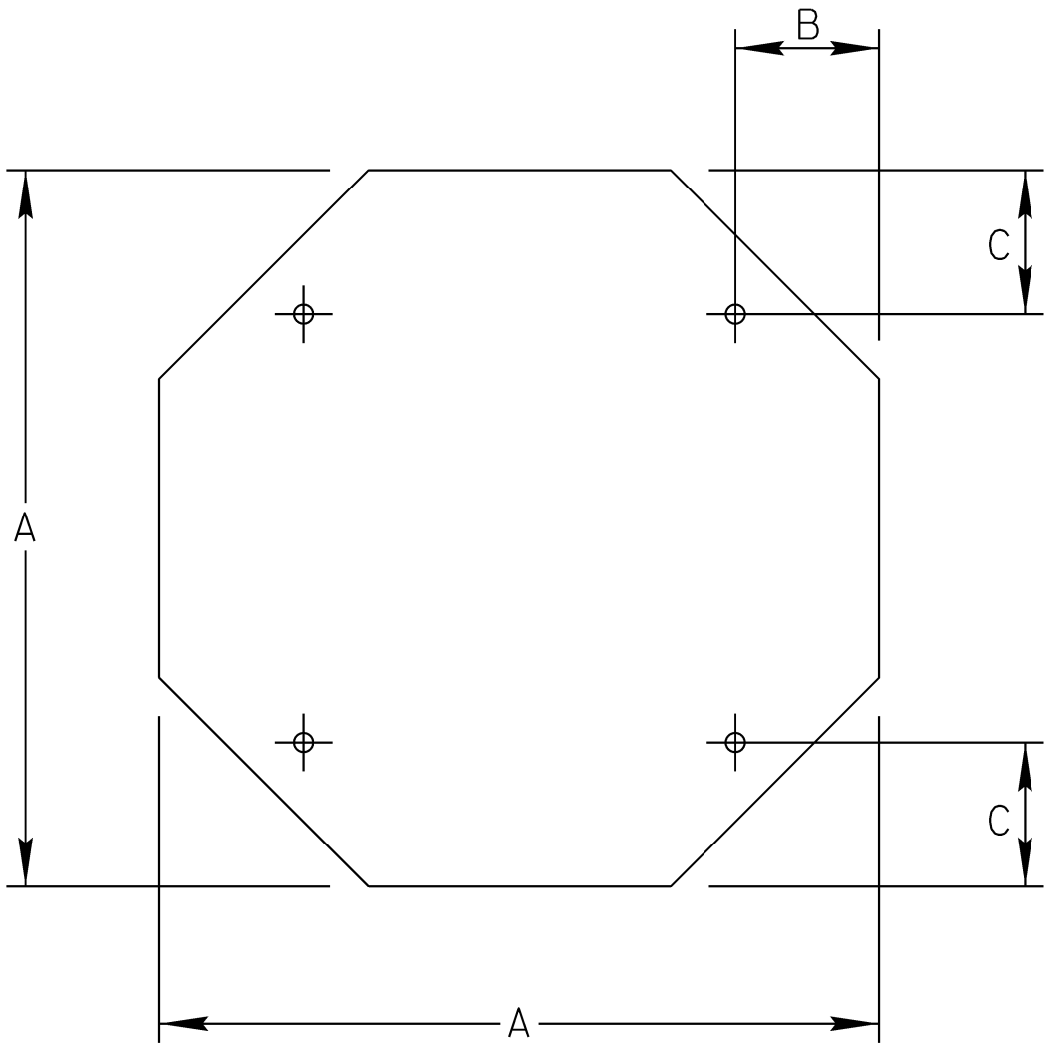

A	B	C	THICKNESS
48	9	9	.125

(All dimensions are in inches)

Hole diameter is 3/8 inches unless otherwise noted

(Not to Scale)

MARICOPA COUNTY DEPARTMENT OF TRANSPORTATION STANDARD DETAIL	OCTAGON	DATE: 05/2004	DETAIL NO. 2061-1A

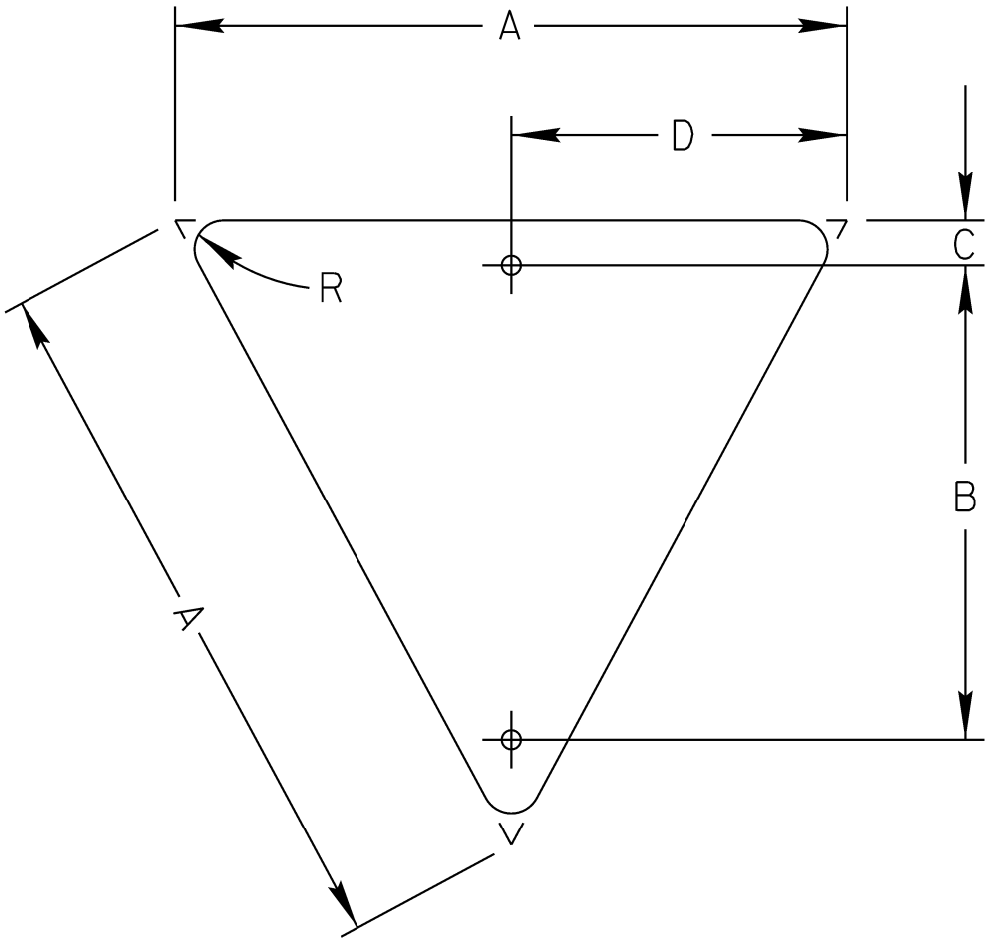

A	B	C	D	R	THICKNESS
36	21	3	18	1	.100

(All dimensions are in inches)

Hole diameter is 3/8 inches unless otherwise noted

(Not to Scale)

MARICOPA COUNTY DEPARTMENT OF TRANSPORTATION STANDARD DETAIL	EQUILATERAL TRIANGLE	DATE: 05/2004	DETAIL NO. 2061-2

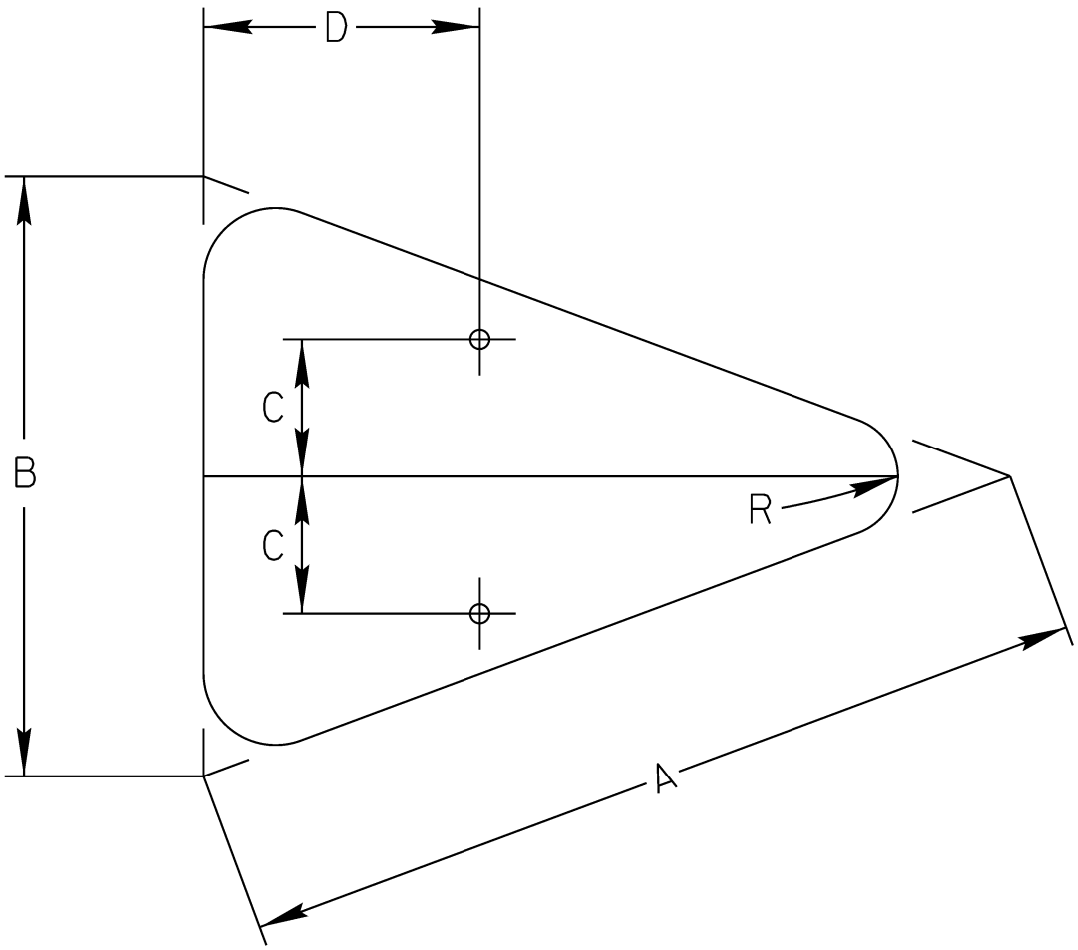

A	B	C	D	R	THICKNESS
48	36	9	15	$2\frac{1}{4}$	.100

(All dimensions are in inches)

Hole diameter is $\frac{3}{8}$ inches unless otherwise noted

(Not to Scale)

MARICOPA COUNTY DEPARTMENT OF TRANSPORTATION STANDARD DETAIL	ISOSCELES TRIANGLE	DATE: 05/2004	DETAIL NO. 2061-3

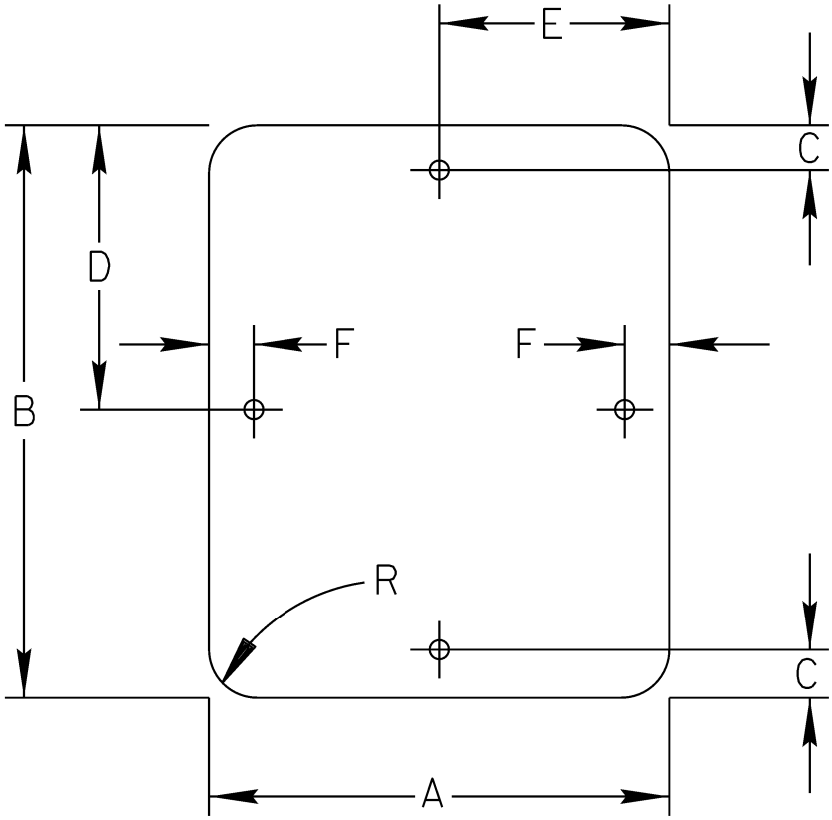

A	B	C	D	E	F	R	THICKNESS
6	12	1	6	3	1	1	.080
6	18	1	9	3	1	1	.080
7	48	1	24	1	1	1 1/2	.100
11	48	1	24	1	1	1 1/2	.100
12	48	3	24	6	3	1 1/2	.100
24	30	2	15	12	2	1 1/2	.100
24	36	3	18	12	2	1 1/2	.100
30	36	2	18	15	2	1 1/2	.100

(All dimensions are in inches)

Hole diameter is 3/8 inches unless otherwise noted

(Not to Scale)

MARICOPA COUNTY DEPARTMENT OF TRANSPORTATION STANDARD DETAIL	VERTICAL RECTANGLE	DATE: 05/2004	DETAIL NO. 2061-4

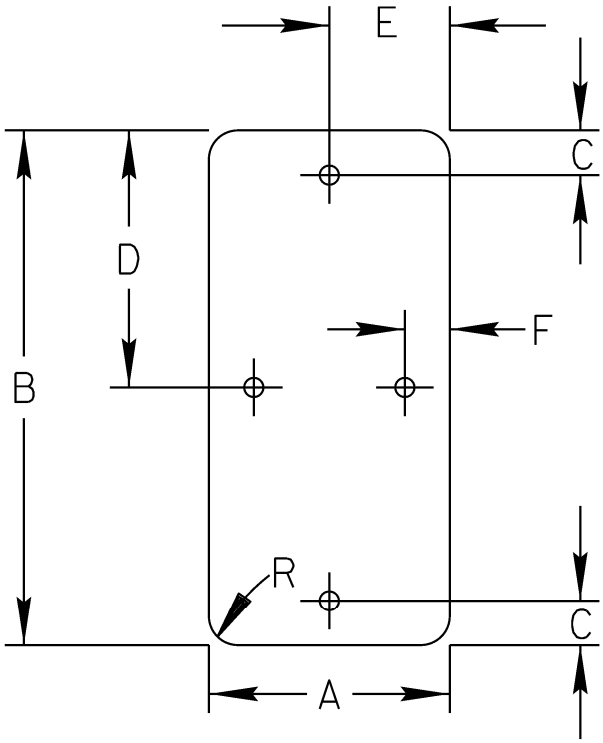

A	B	C	D	E	F	R	THICKNESS
6	24	2	12	3	2	1	.080
6	30	3	15	3	2	1	.100
8	24	2	12	4	2	1 1/2	.100
12	60	3	30	6	3	1 1/2	.100
12	72	6	36	6	3	1 1/2	.100
18	36	3	18	9	3	1 1/2	.100
18	30	3	15	9	3	1 1/2	.100
20	36	3	18	10	3	1 1/2	.100

(All dimensions are in inches)

Hole diameter is 3/8 inches unless otherwise noted

(Not to Scale)

MARICOPA COUNTY DEPARTMENT OF TRANSPORTATION STANDARD DETAIL	VERTICAL RECTANGLE	DATE: 05/2004	DETAIL NO. 2061-5

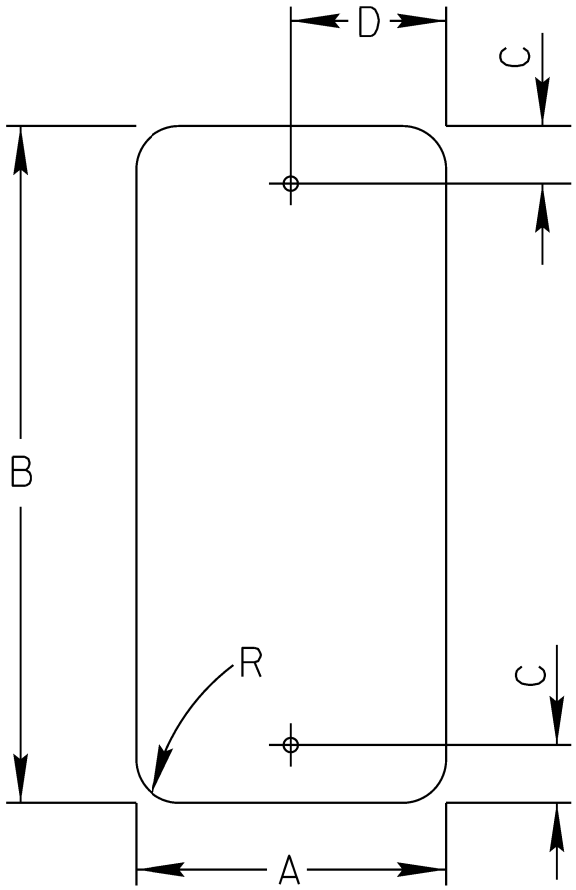

A	B	C	D	R	THICKNESS
18	48	2	9	1 1/2	.125
24	60	6	12	1 1/2	.125
10	18	1	5	1 1/2	.080
10	27	1	5	1 1/2	.080
10	36	1	5	1 1/2	.080

(All dimensions are in inches)

Hole diameter is 3/8 inches unless otherwise noted

(Not to Scale)

MARICOPA COUNTY DEPARTMENT OF TRANSPORTATION STANDARD DETAIL	RECTANGLE & MILE POST BLANK	DATE: 10/2004	DETAIL NO. 2061-6

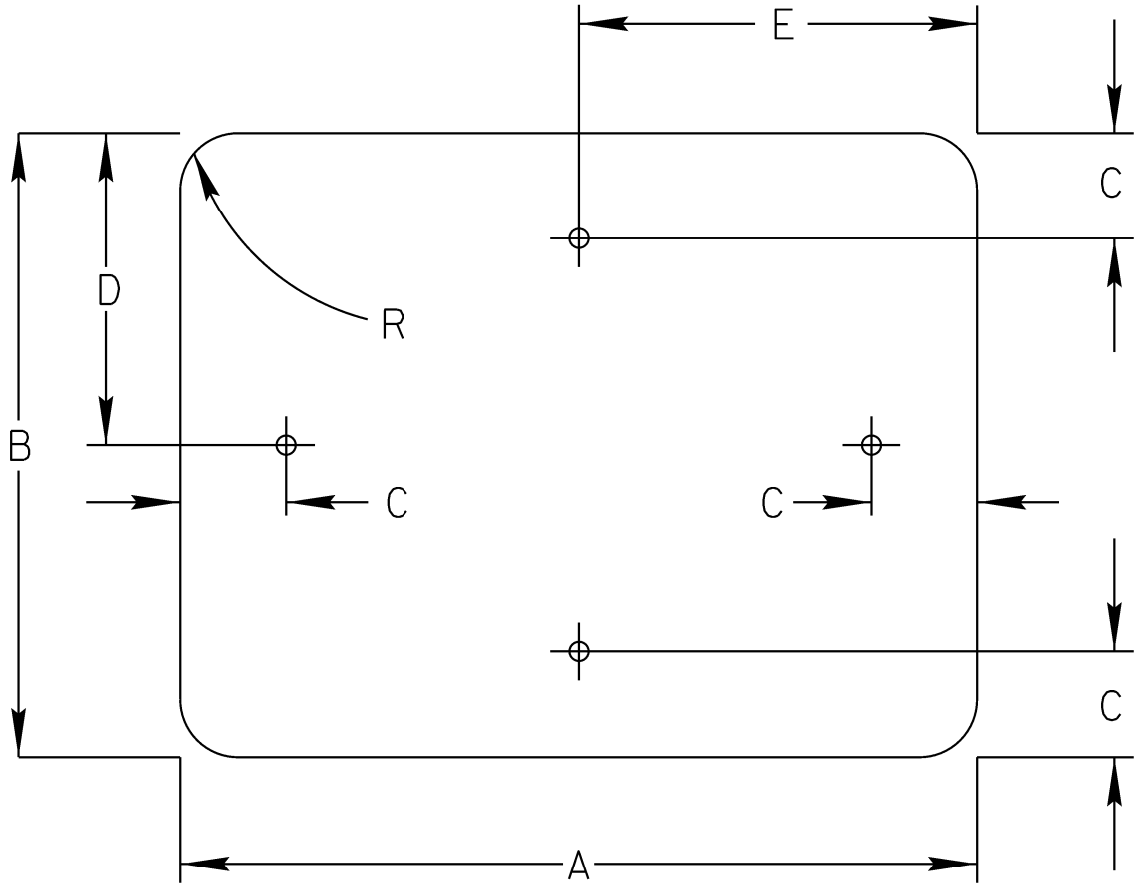

A	B	C	D	E	R	THICKNESS
18	12	1 1/2	6	9	1 1/2	.063
24	18	3	9	12	1 1/2	.100
30	18	2	9	15	1 1/2	.100
36	12	1 1/2	6	18	1 1/2	.100
36	20	2	10	18	1 1/2	.125

(All dimensions are in inches)

Hole diameter is 3/8 inches unless otherwise noted

(Not to Scale)

MARICOPA COUNTY DEPARTMENT OF TRANSPORTATION STANDARD DETAIL	RECTANGLE	DATE: 05/2004	DETAIL NO. 2061-7

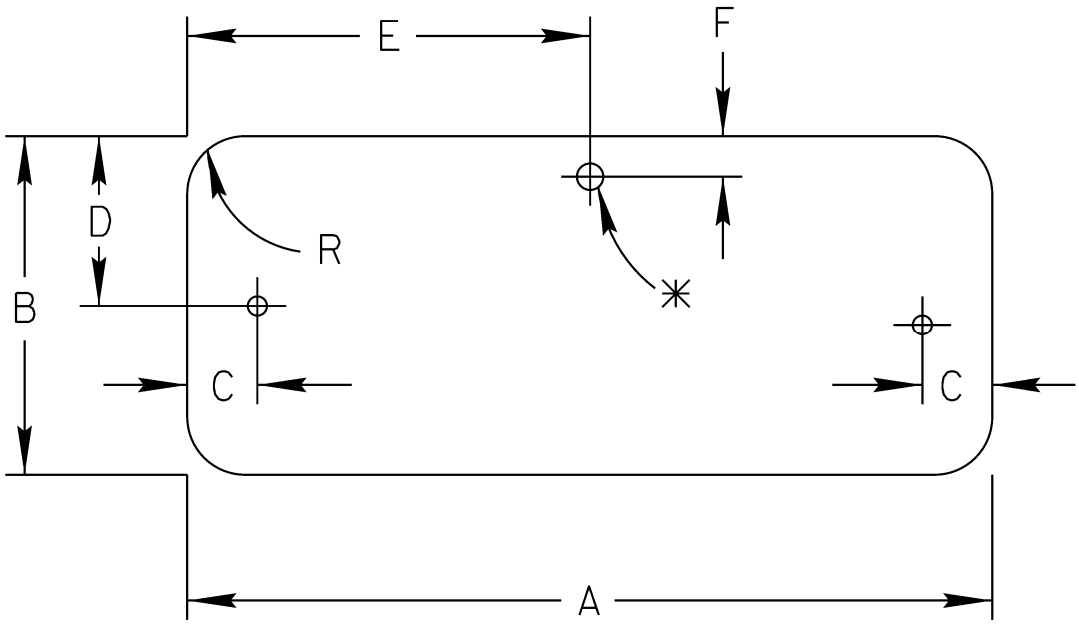

A	B	C	D	E	F	R	THICKNESS
48	30	9	15	24	3	$1\frac{7}{8}$	.125

(All dimensions are in inches)

Hole diameter is $\frac{3}{8}$ inches unless otherwise noted

✳ = Hole diameter is $\frac{9}{16}$ inches

(Not to Scale)

MARICOPA COUNTY DEPARTMENT OF TRANSPORTATION STANDARD DETAIL	RECTANGLE	DATE: 05/2004	DETAIL NO. 2061-8

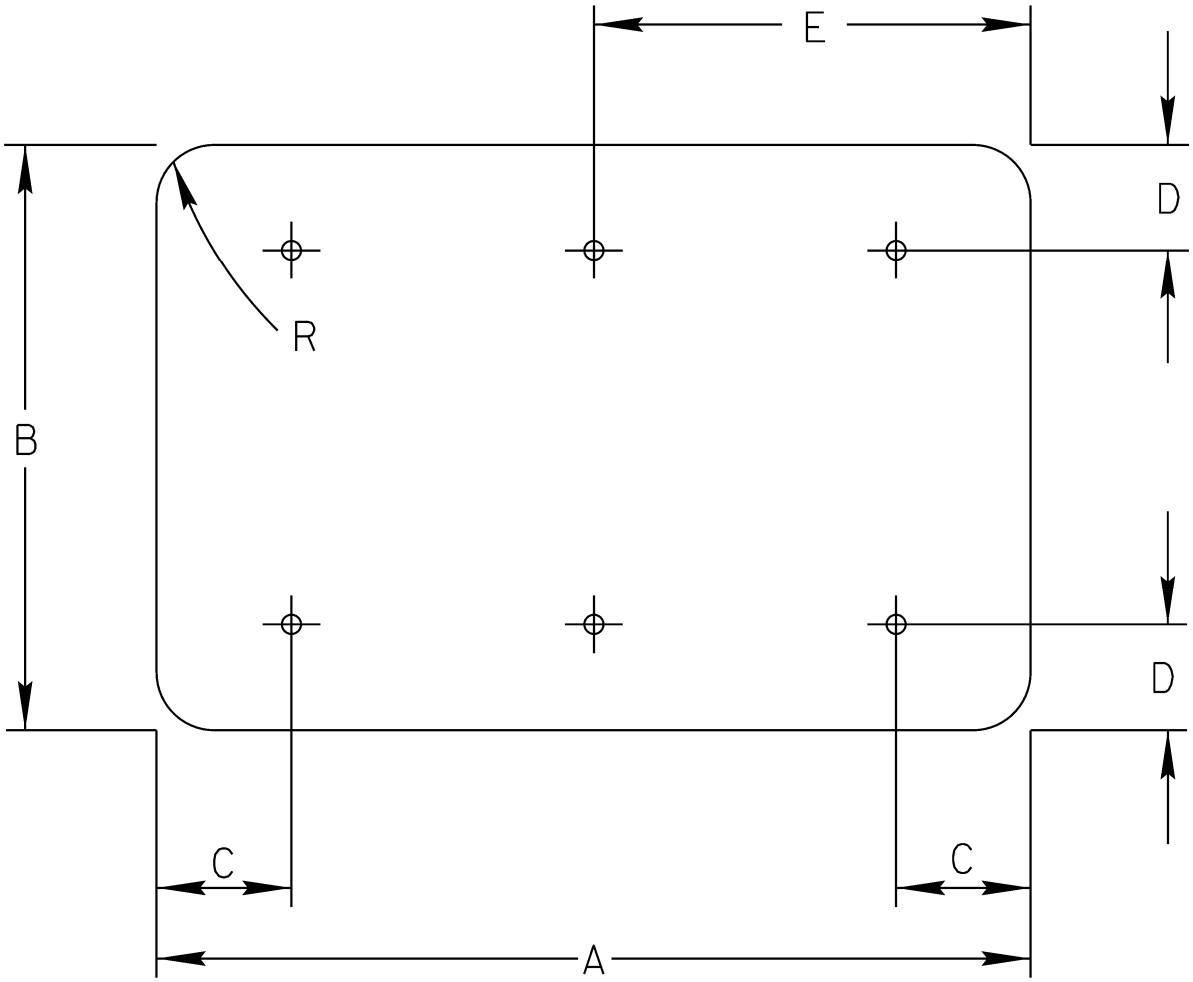

A	B	C	D	E	R	THICKNESS
48	24	9	3	24	$1\frac{7}{8}$	.125
48	36	6	6	24	3	.125
60	30	12	3	30	3	.125
60	36	12	3	30	3	.125
72	48	6	3	36	3	.125
96	48	6	6	48	3	.125

(All dimensions are in inches)

Hole diameter is $\frac{3}{8}$ inches unless otherwise noted

(Not to Scale)

MARICOPA COUNTY DEPARTMENT OF TRANSPORTATION STANDARD DETAIL	RECTANGLE	DATE: 05/2004	DETAIL NO. 2061-9

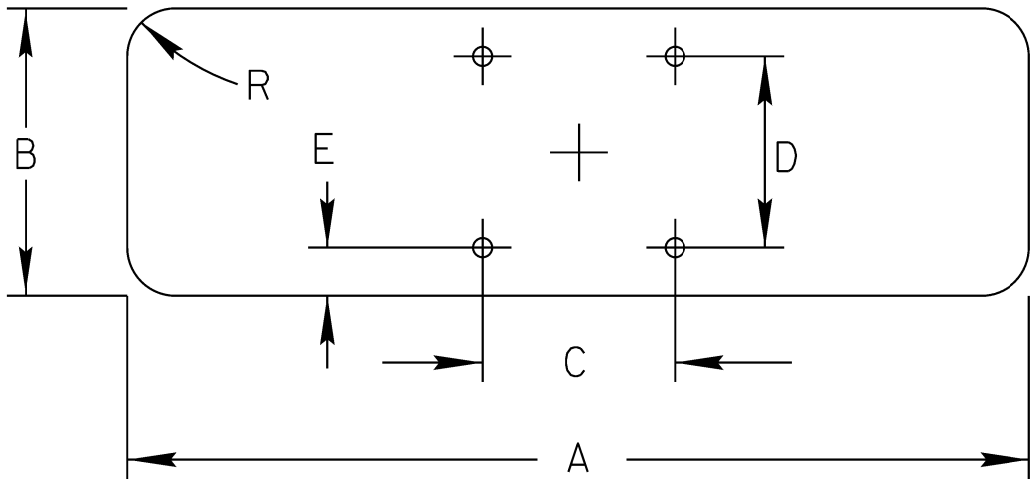

A	B	C	D	E	R	THICKNESS
24	8	$4\frac{11}{16}$	$5\frac{7}{8}$	$\frac{9}{16}$	$1\frac{1}{2}$	.125
30	8	$4\frac{11}{16}$	$5\frac{7}{8}$	$\frac{9}{16}$	$1\frac{1}{2}$	.125
36	8	$4\frac{11}{16}$	$5\frac{7}{8}$	$\frac{9}{16}$	$1\frac{1}{2}$	.125
42	8	$4\frac{11}{16}$	$5\frac{7}{8}$	$\frac{9}{16}$	$1\frac{1}{2}$	.125
48	8	$4\frac{11}{16}$	$5\frac{7}{8}$	$\frac{9}{16}$	$1\frac{1}{2}$	.125

(ALL DIMENTIONS ARE IN INCHES)

HOLE DIAMETER IS $\frac{3}{8}$ INCHES UNLESS OTHERWISE NOTED

(NOT TO SCALE)

		REVISED DATE 07/2006	
MARICOPA COUNTY DEPARTMENT OF TRANSPORTATION STANDARD DETAIL	STREET NAME SIGN	DATE: 05/2004	DETAIL NO. 2061-10A

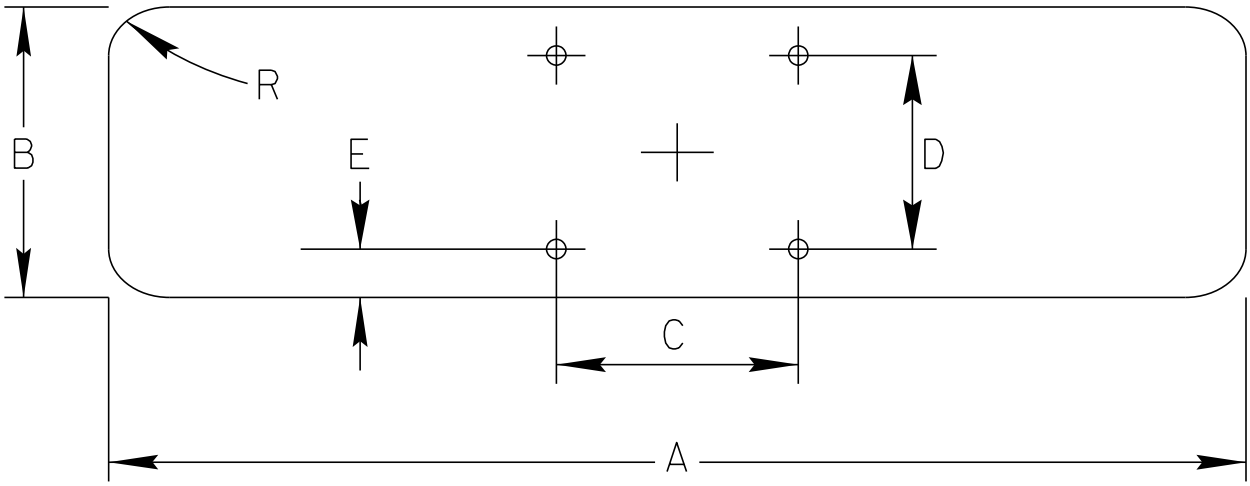

A	B	C	D	E	R	THICKNESS
24	12	6	$9\frac{7}{8}$	$\frac{9}{16}$	$1\frac{1}{2}$	.125
30	12	6	$9\frac{7}{8}$	$\frac{9}{16}$	$1\frac{1}{2}$	.125
36	12	6	$9\frac{7}{8}$	$\frac{9}{16}$	$1\frac{1}{2}$	.125
42	12	6	$9\frac{7}{8}$	$\frac{9}{16}$	$1\frac{1}{2}$	.125
48	12	6	$9\frac{7}{8}$	$\frac{9}{16}$	$1\frac{1}{2}$	.125
54	12	6	$9\frac{7}{8}$	$\frac{9}{16}$	$1\frac{1}{2}$	.125
60	12	6	$9\frac{7}{8}$	$\frac{9}{16}$	$1\frac{1}{2}$	.125

(ALL DIMENTIONS ARE IN INCHES)

HOLE DIAMETER IS $\frac{3}{8}$ INCHES UNLESS OTHERWISE NOTED

(NOT TO SCALE)

		REVISED DATE	07/2006
MARICOPA COUNTY DEPARTMENT OF TRANSPORTATION **STANDARD DETAIL**	**STREET NAME SIGN**	DATE: 05/2004	DETAIL NO. **2061-10B**

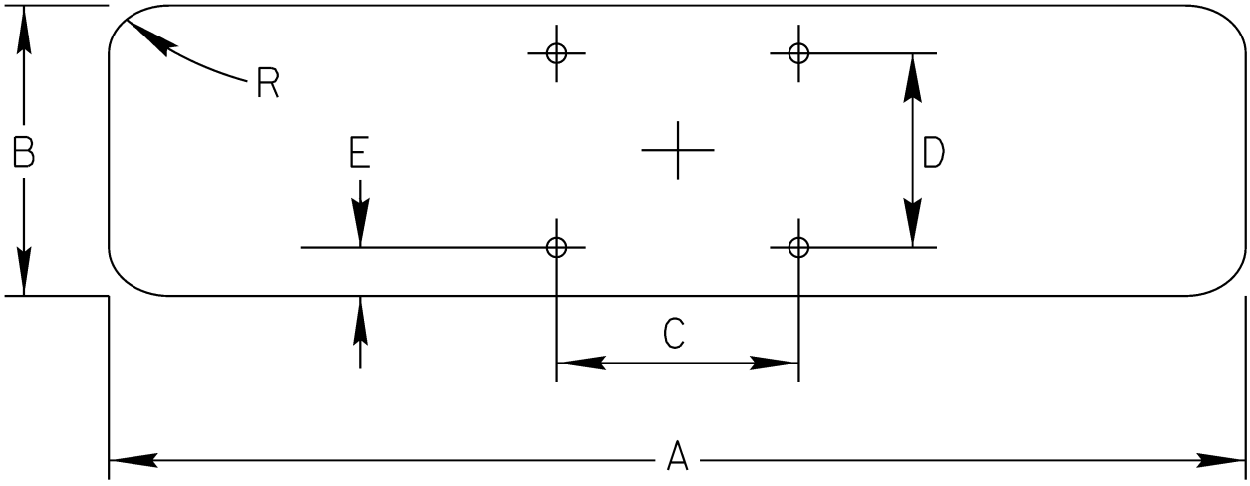

A	B	C	D	E	R	THICKNESS
36	8	$4\frac{11}{16}$	$9\frac{7}{8}$	$\frac{9}{16}$	$1\frac{7}{8}$	.125
42	12	6	$9\frac{7}{8}$	$\frac{9}{16}$	$1\frac{7}{8}$	.125

(All dimensions are in inches)

Hole diameter is $\frac{3}{8}$ inches unless otherwise noted

(Not to Scale)

		REVISED DATE 07/2006	
MARICOPA COUNTY DEPARTMENT OF TRANSPORTATION STANDARD DETAIL	DEAD END NO OUTLET	DATE: 05/2004	DETAIL NO. 2061-11

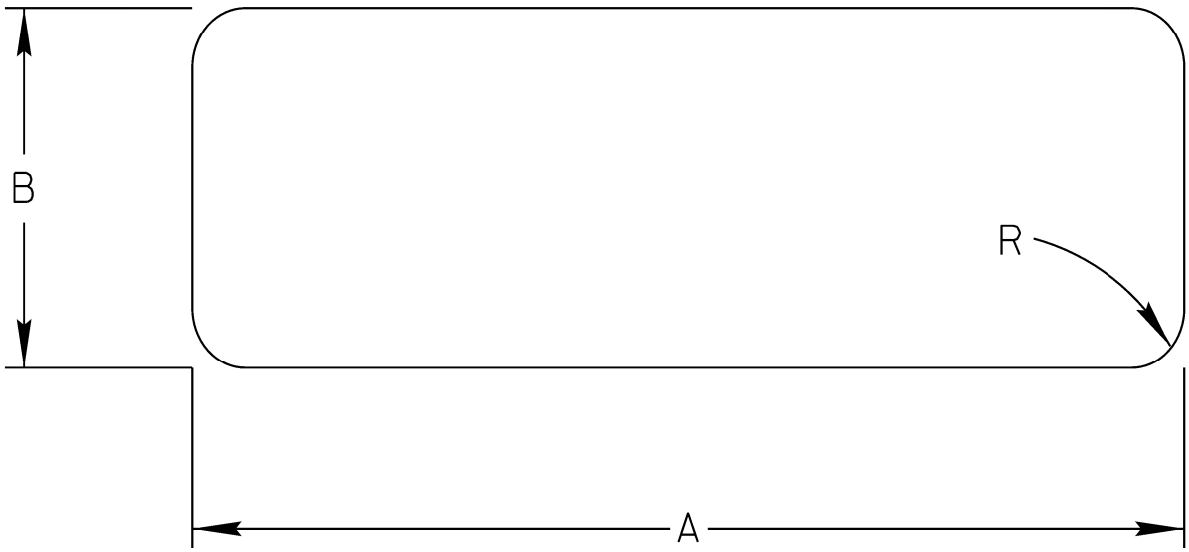

A	B	R	THICKNESS
60	18	1 1/2	.125
72	18	1 1/2	.125
84	18	1 1/2	.125
96	18	1 1/2	.125
108	18	1 1/2	.125

(All dimensions are in inches)

(Not to Scale)

MARICOPA COUNTY DEPARTMENT OF TRANSPORTATION STANDARD DETAIL	OVERHEAD STREET NAME SIGN	DATE: 05/2004	DETAIL NO. 2061-12

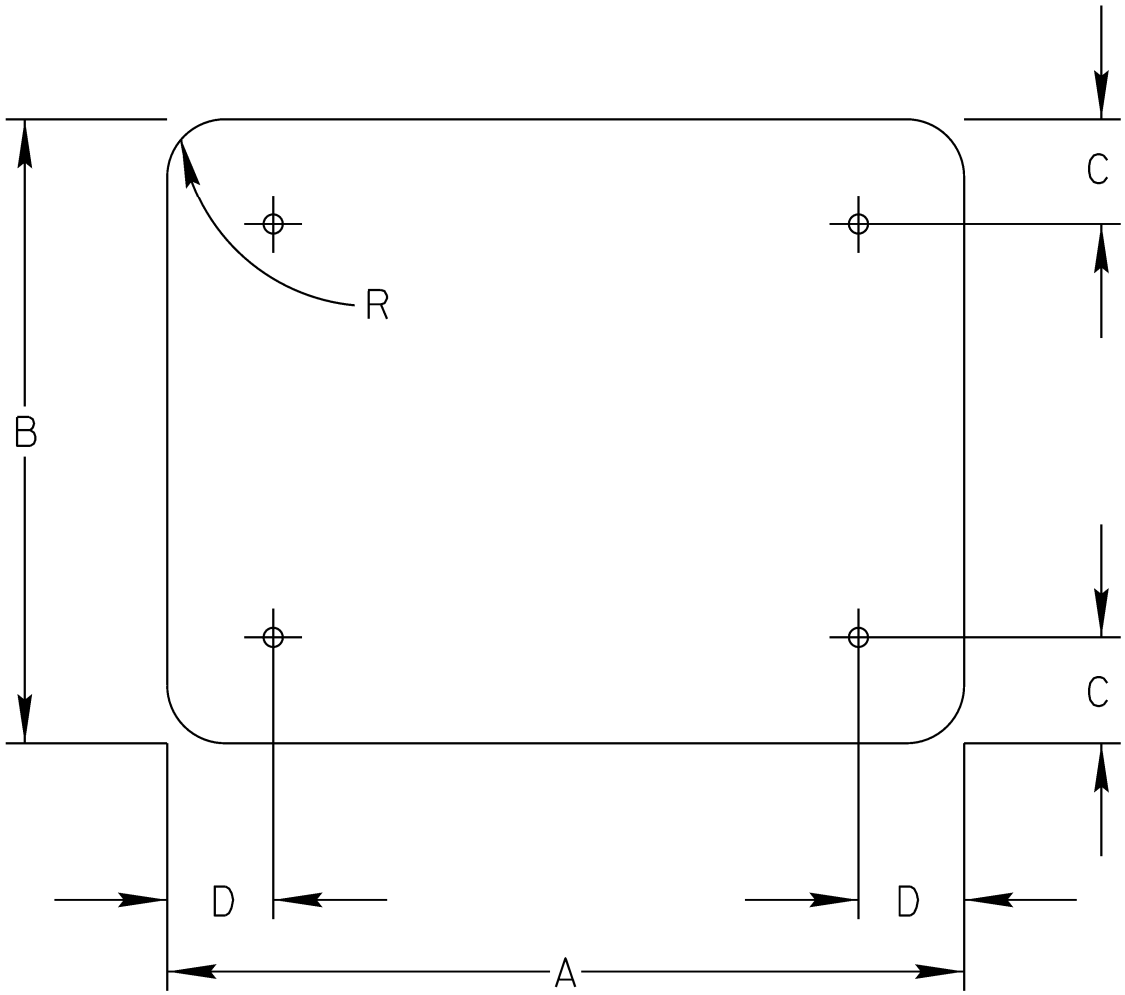

A	B	C	D	R	THICKNESS
60	48	9	6	3	.125

(All dimensions are in inches)

Hole diameter is 3/8 inches unless otherwise noted

(Not to Scale)

MARICOPA COUNTY DEPARTMENT OF TRANSPORTATION STANDARD DETAIL	RECTANGLE	DATE: 05/2004	DETAIL NO. 2061-13

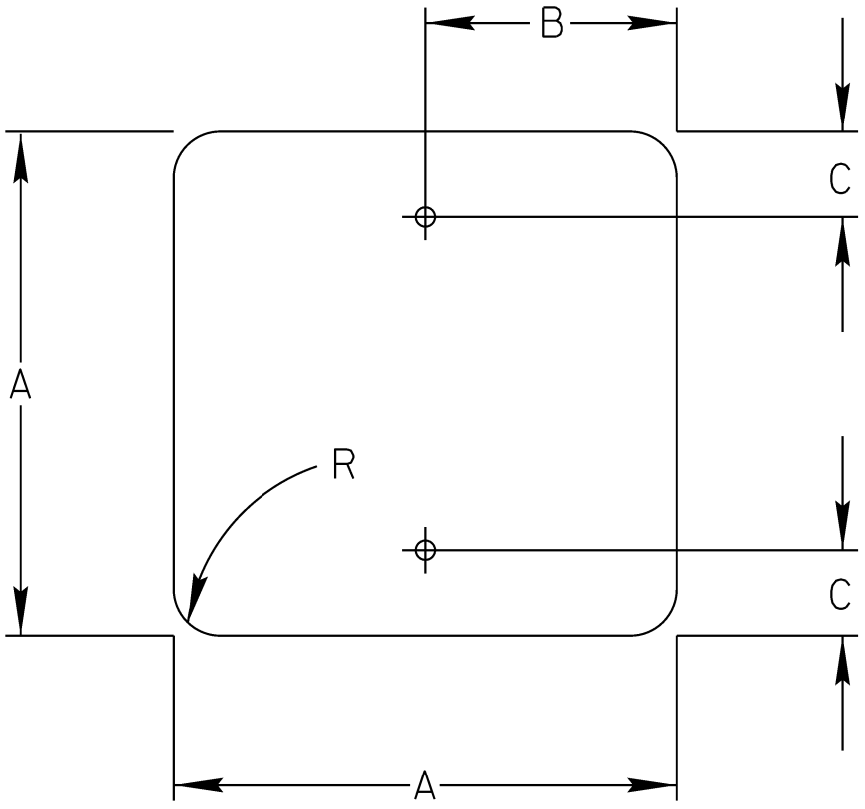

A	B	C	R	THICKNESS
6	3	1	1	.080

(All dimensions are in inches)

Hole diameter is 3/8 inches unless otherwise noted

(Not to Scale)

MARICOPA COUNTY DEPARTMENT OF TRANSPORTATION STANDARD DETAIL	SQUARE	DATE: 05/2004	DETAIL NO. 2061-14

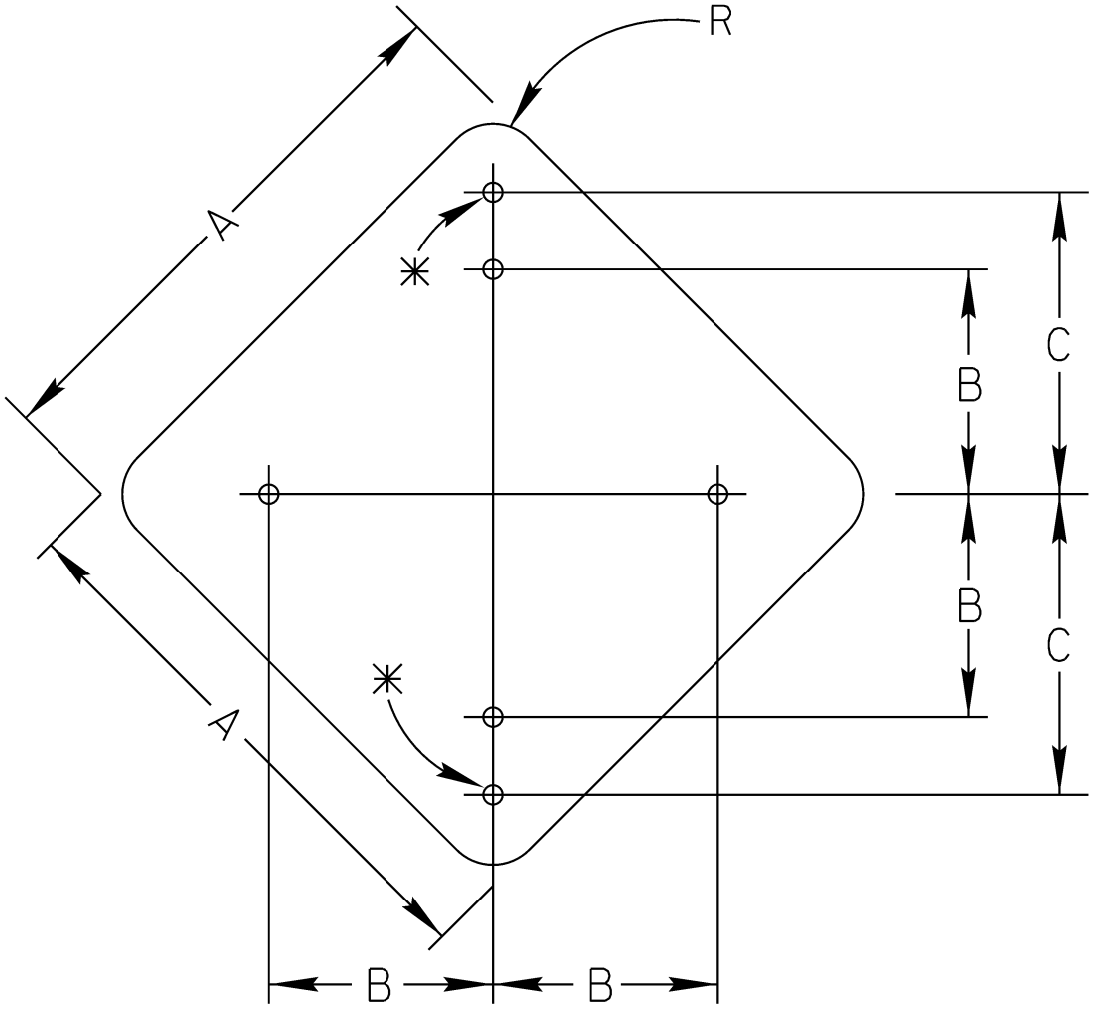

A	B	C	R	THICKNESS
48	24	28	3	.125

(All dimensions are in inches)

Hole diameter is 3/8 inches unless otherwise noted

✳ = Hole diameter is 9/16 inches

(Not to Scale)

MARICOPA COUNTY DEPARTMENT OF TRANSPORTATION STANDARD DETAIL	DIAMOND	DATE: 05/2004	DETAIL NO. 2061-15

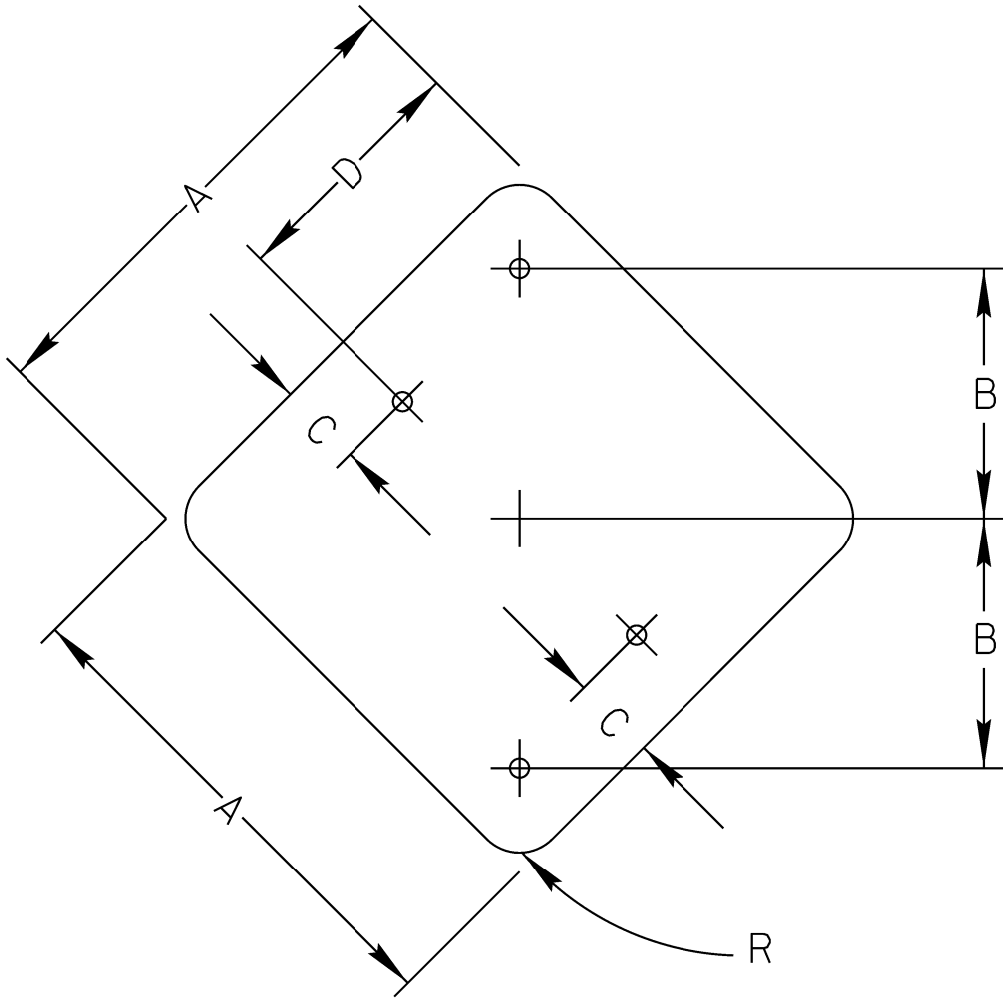

A	B	C	D	R	THICKNESS
18	9	3	9	$1\frac{1}{2}$	.080

(All dimensions are in inches)

Hole diameter is $\frac{3}{8}$ inches unless otherwise noted

(Not to Scale)

MARICOPA COUNTY DEPARTMENT OF TRANSPORTATION STANDARD DETAIL	MULTIPURPOSE	DATE: 05/2004	DETAIL NO. 2061-16

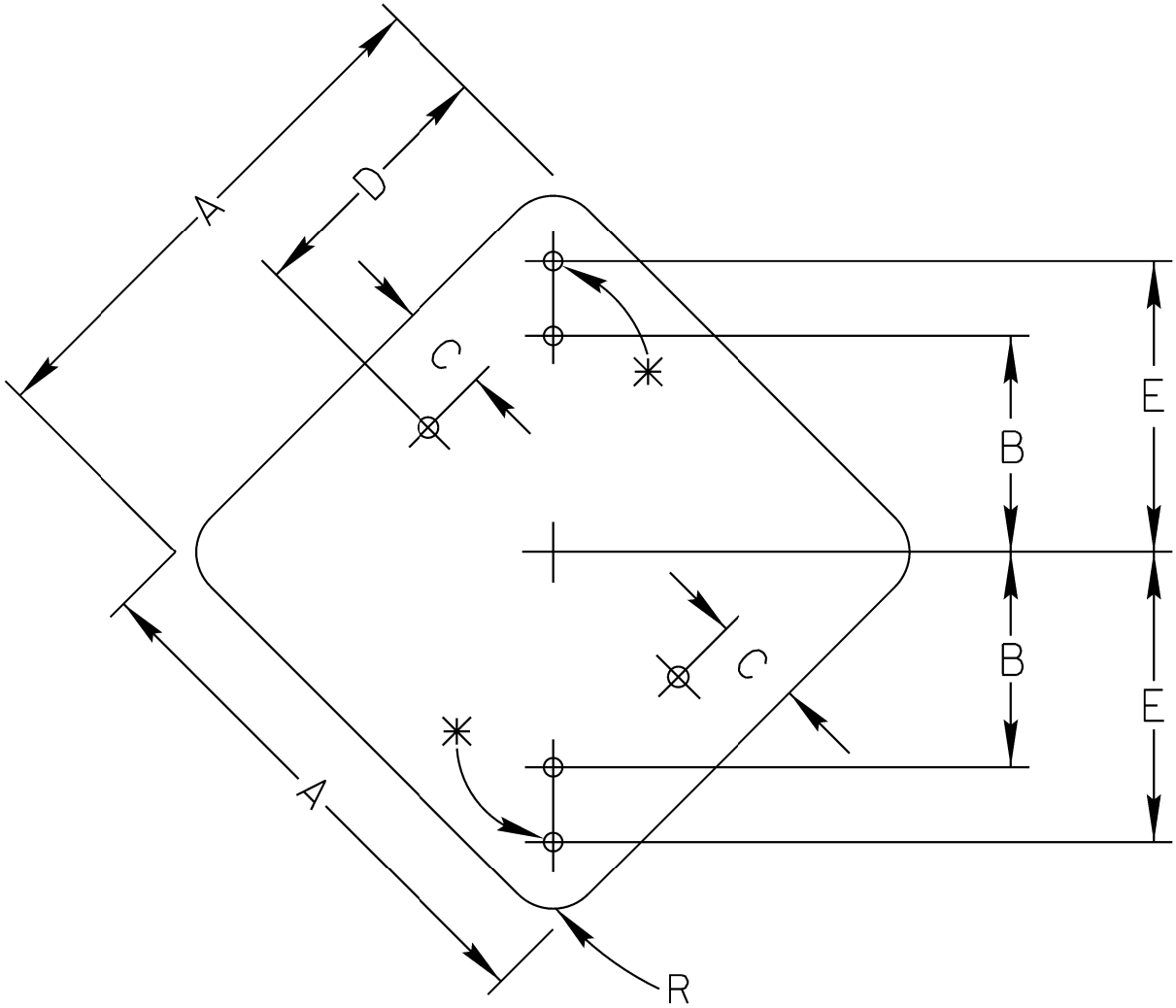

A	B	C	D	E	R	THICKNESS
24	10	2	12	13	$1\frac{1}{2}$	.080
30	15	2	15	18	$1\frac{1}{2}$	.080
36	18	2	18	22	$1\frac{1}{2}$	.100

(All dimensions are in inches)

Hole diameter is $\frac{3}{8}$ inches unless otherwise noted

* = Hole diameter is $\frac{9}{16}$ inches

(Not to Scale)

MARICOPA COUNTY DEPARTMENT OF TRANSPORTATION STANDARD DETAIL	MULTIPURPOSE	DATE: 05/2004	DETAIL NO. 2061-17

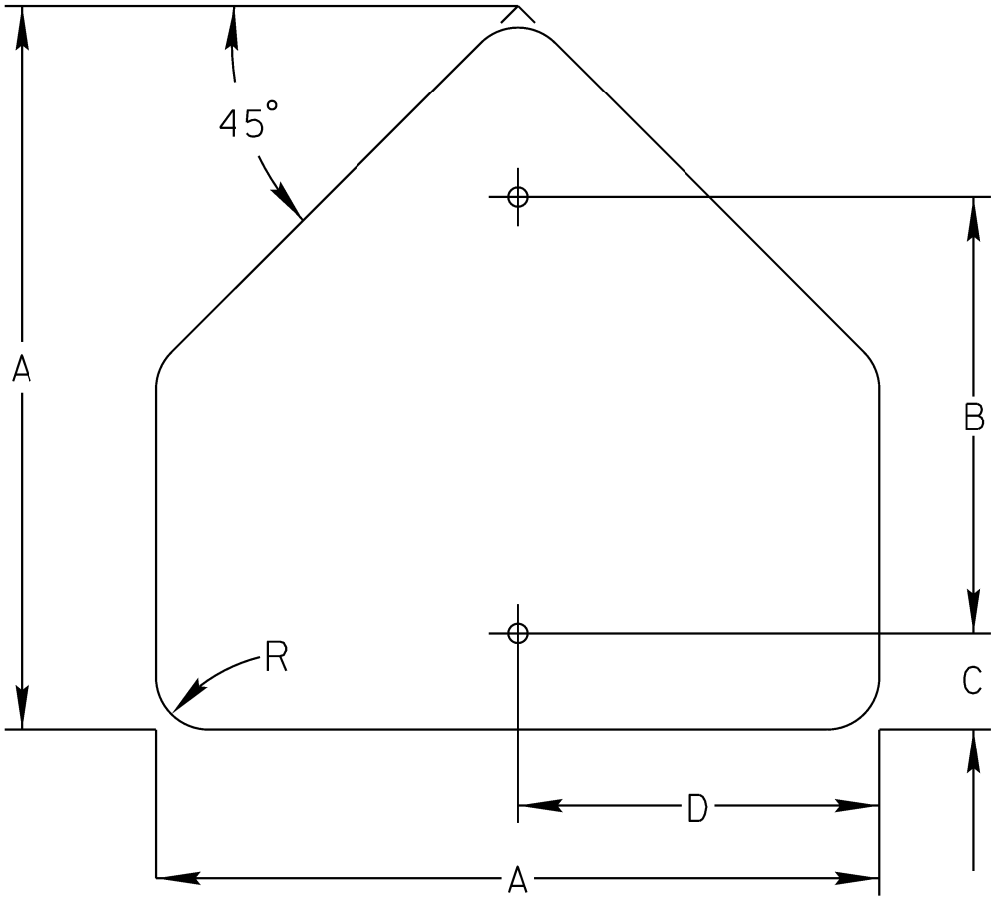

A	B	C	D	R	THICKNESS
36	24	3	18	$2\frac{1}{4}$	.100

(All dimensions are in inches)

Hole diameter is $\frac{3}{8}$ inches unless otherwise noted

(Not to Scale)

MARICOPA COUNTY DEPARTMENT OF TRANSPORTATION STANDARD DETAIL	PENTAGON	DATE: 05/2004	DETAIL NO. 2061-18

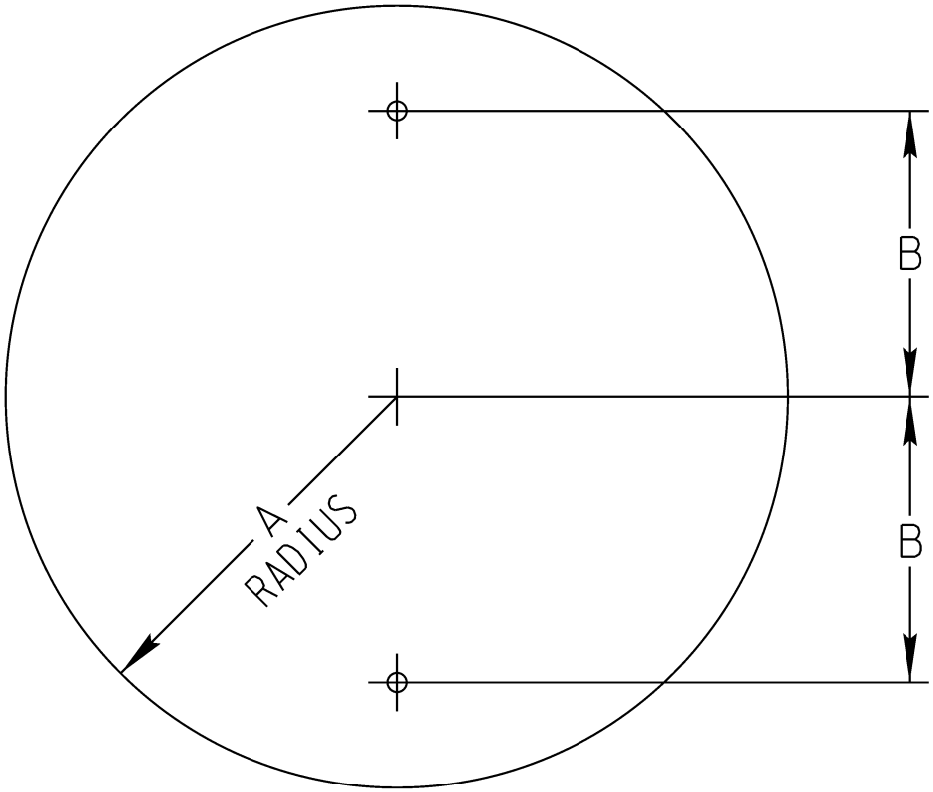

A	B	THICKNESS
18	15	.125

(All dimensions are in inches)

Hole diameter is 3/8 inches unless otherwise noted

(Not to Scale)

MARICOPA COUNTY DEPARTMENT OF TRANSPORTATION STANDARD DETAIL	CIRCLE	DATE: 05/2004	DETAIL NO. 2061-19

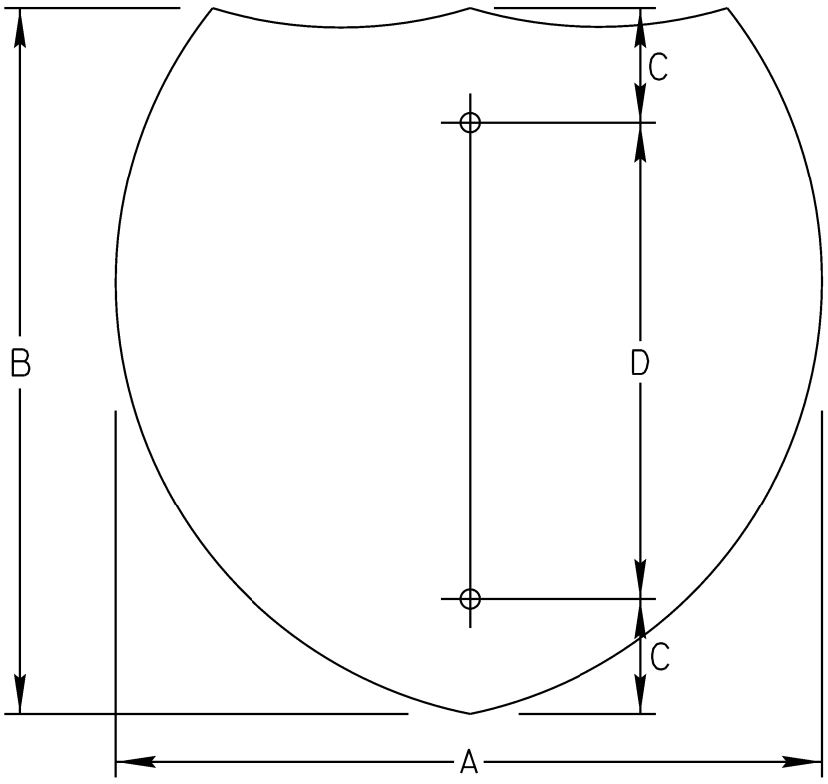

A	B	C	D	THICKNESS
24	24	3	18	.125
30	24	3	18	.125
36	36	6	24	.125
45	36	6	24	.125

(All dimensions are in inches)

Hole diameter is 3/8 inches unless otherwise noted

(Not to Scale)

MARICOPA COUNTY DEPARTMENT OF TRANSPORTATION STANDARD DETAIL	INTERSTATE SHIELD	DATE: 05/2004	DETAIL NO. 2061-20

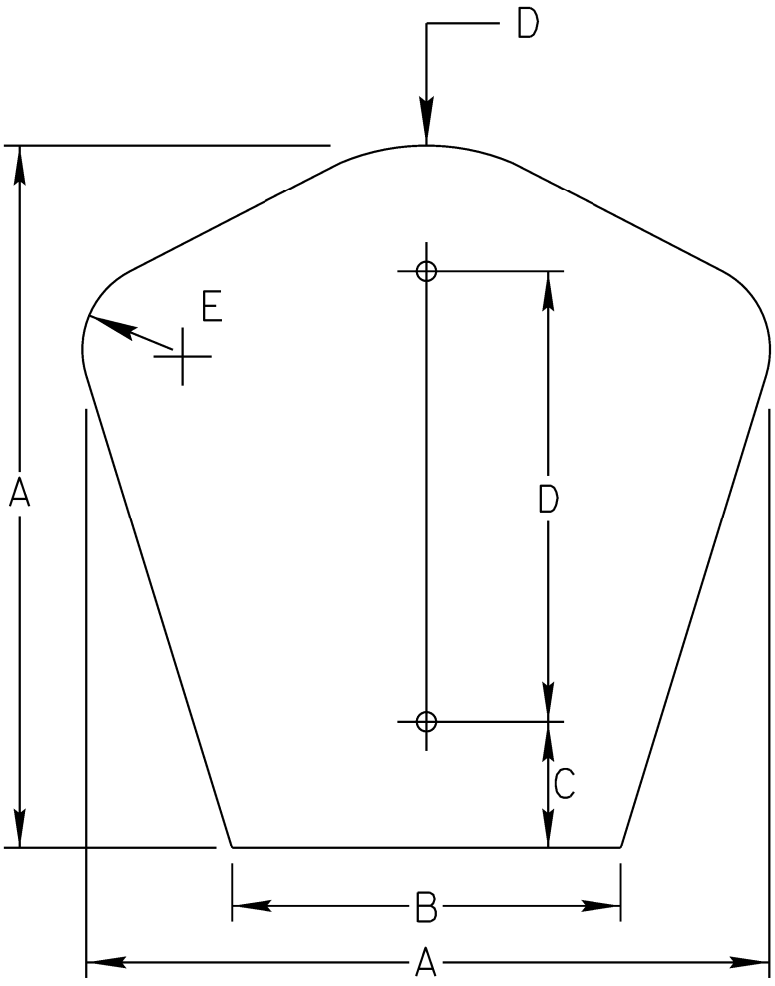

A	B	C	D	E	THICKNESS
18	15	1	5	2	.125
24	18	2	$5\frac{5}{16}$	2	.125
30	24	2	$5\frac{5}{16}$	2	.125

(All dimensions are in inches)

Hole diameter is $\frac{3}{8}$ inches unless otherwise noted

(Not to Scale)

MARICOPA COUNTY DEPARTMENT OF TRANSPORTATION STANDARD DETAIL	COUNTY SHIELD	DATE: 05/2004	DETAIL NO. 2061-21

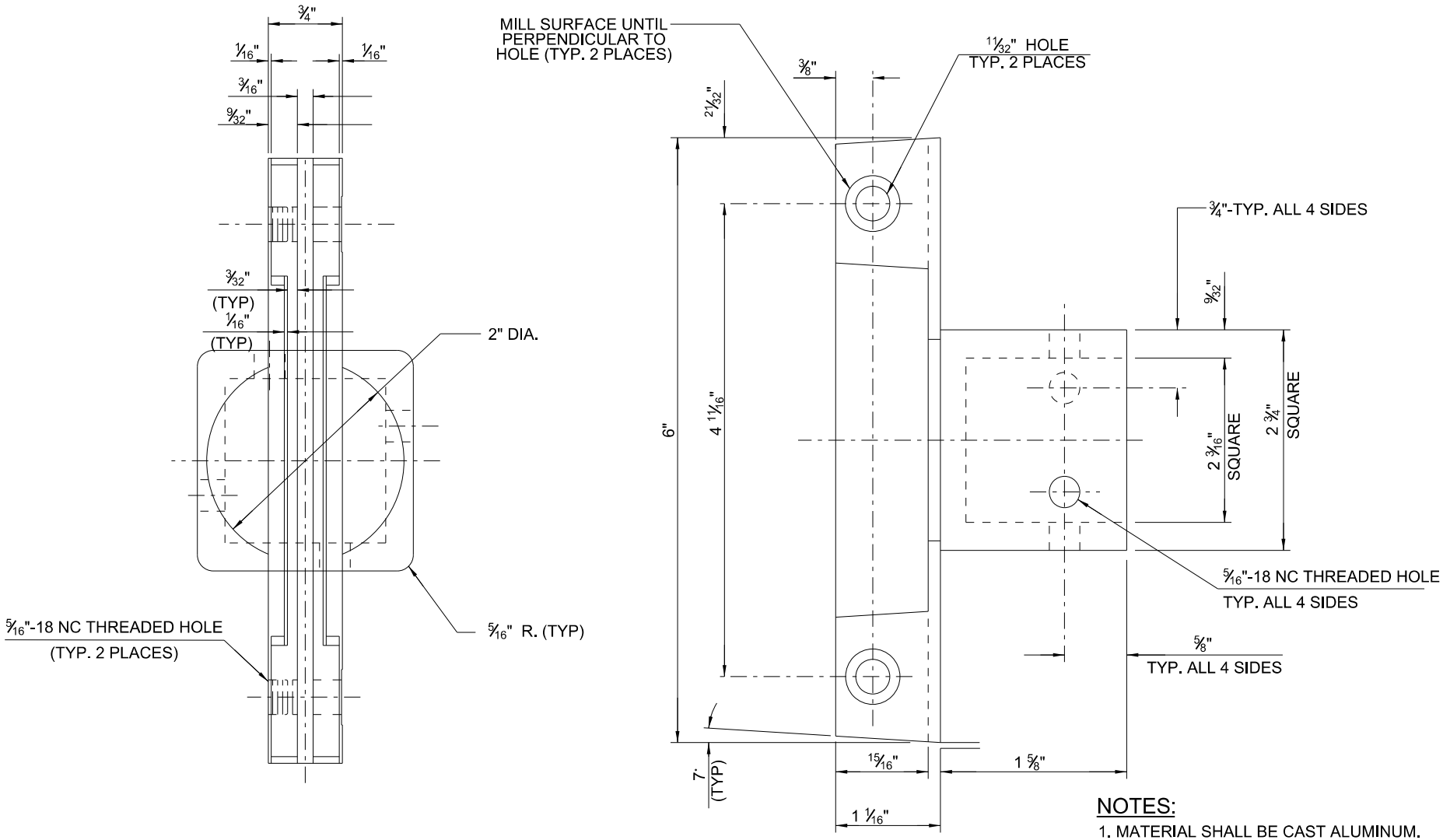

NOTES:

1. MATERIAL SHALL BE CAST ALUMINUM.
2. POST CAP SHALL BE SUPPLIED WITH TWO (2)' VANDAL PROOF' 5/16" X3/4"-18 NC MACHINE SCREWS AND TWO (2) 'VANDAL PROOF' 5/16" X3/16"-18 SET SCREWS.
3. USE GRADE # 2, ZINC COATED, 18 NC THREAD, 1½" X 5/16" BOLT TO ATTACH POST CAP TO THE POST.
4. USE GRADE # 2, ZINC COATED, 18 NC THREAD, 1" X 5/16" BOLT TO ATTACH SIGN TO BRACKET.

MARICOPA COUNTY DEPARTMENT OF TRANSPORTATION	(6") STREET SIGN POST CAP (FOR 2" SQUARE TUBING)	DATE:	DETAIL NO.
STANDARD DETAIL		05/01/2004	2062-1

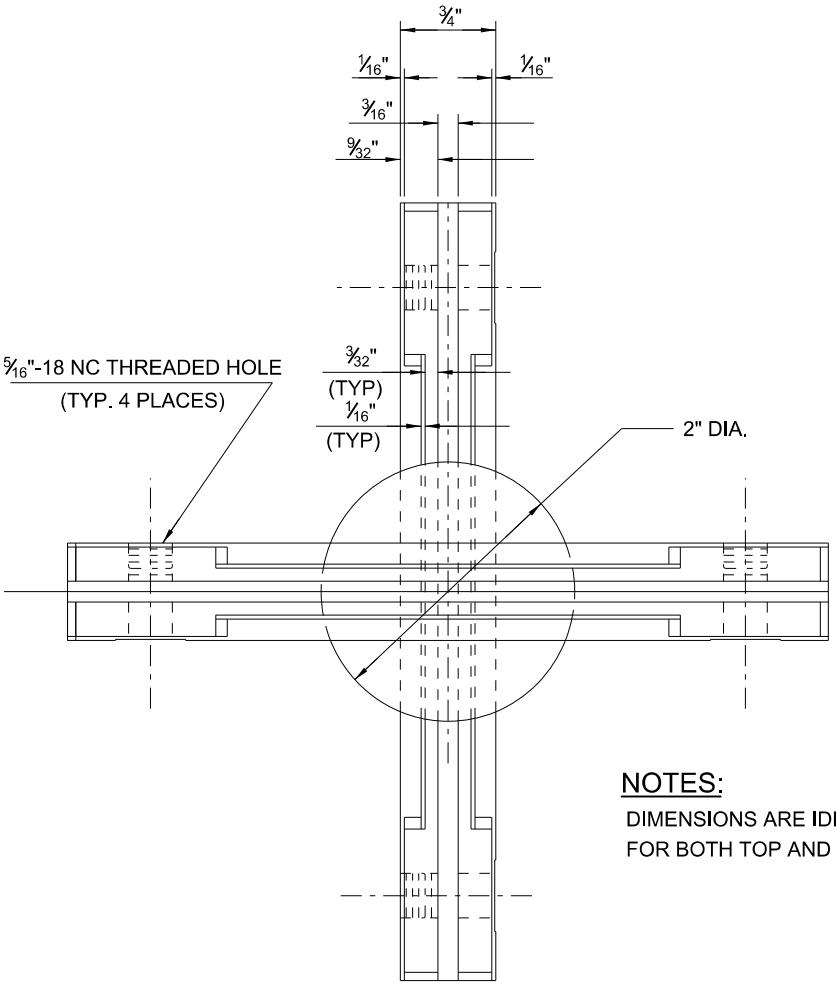

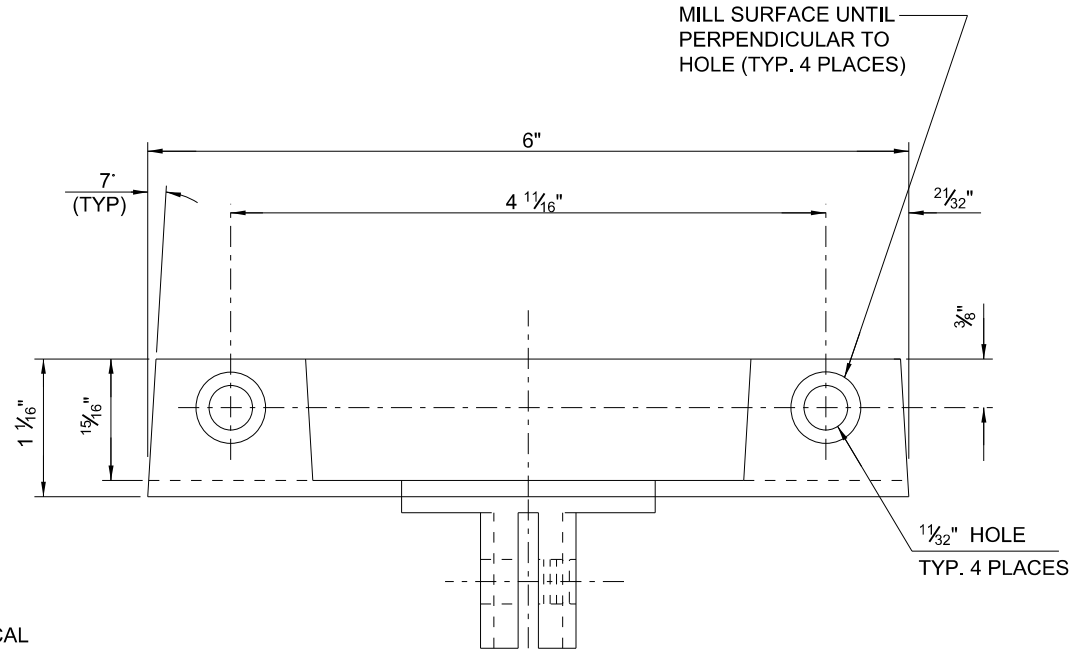

NOTES:

DIMENSIONS ARE IDENTICAL FOR BOTH TOP AND BOTTOM.

MARICOPA COUNTY DEPARTMENT OF TRANSPORTATION	(6") STREET SIGN SEPARATOR BRACKET	DATE:	DETAIL NO.
STANDARD DETAIL		05/01/2004	2062-2

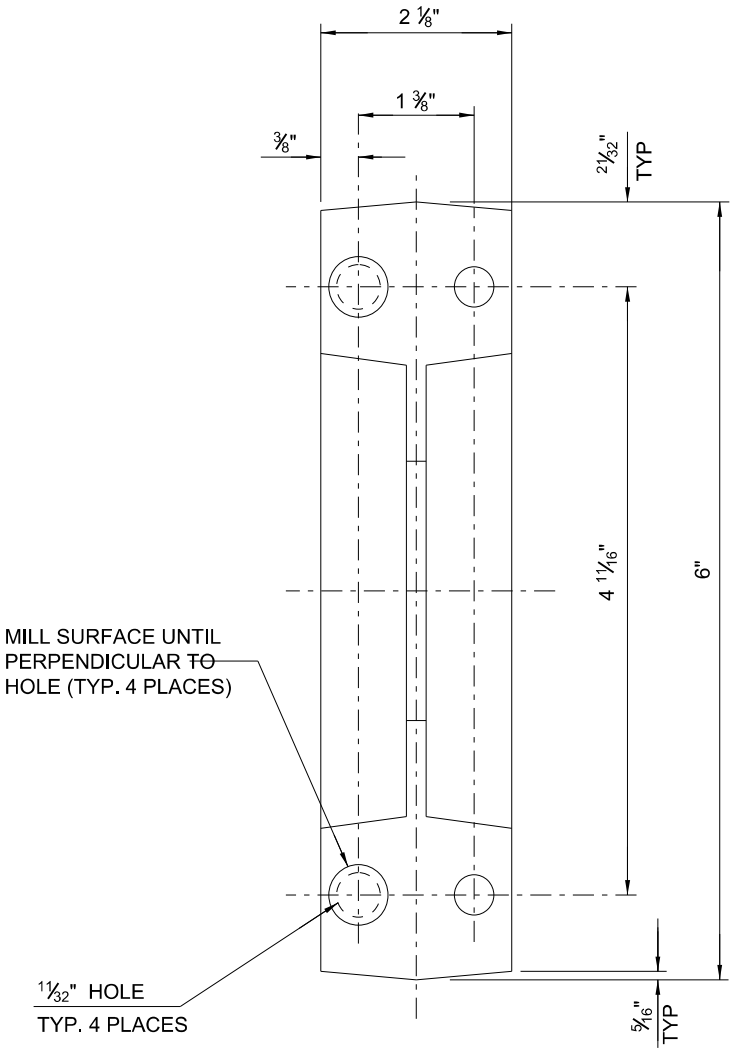

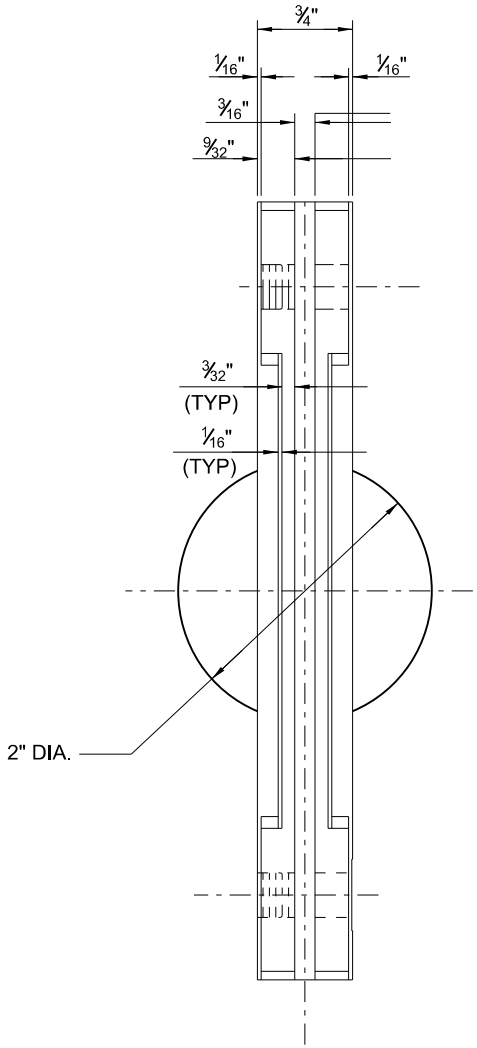

NOTES:

1. MATERIAL SHALL BE CAST ALUMINUM.
2. USE GRADE # 2, ZINC COATED, 18 NC THREAD, 1" X 5/16" BOLT TO ATTACH SIGN TO BRACKET.

MARICOPA COUNTY DEPARTMENT OF TRANSPORTATION	DEAD END / NO OUTLET SEPARATOR BRACKET	DATE:	DETAIL NO.
STANDARD DETAIL		05/01/2004	2062-3

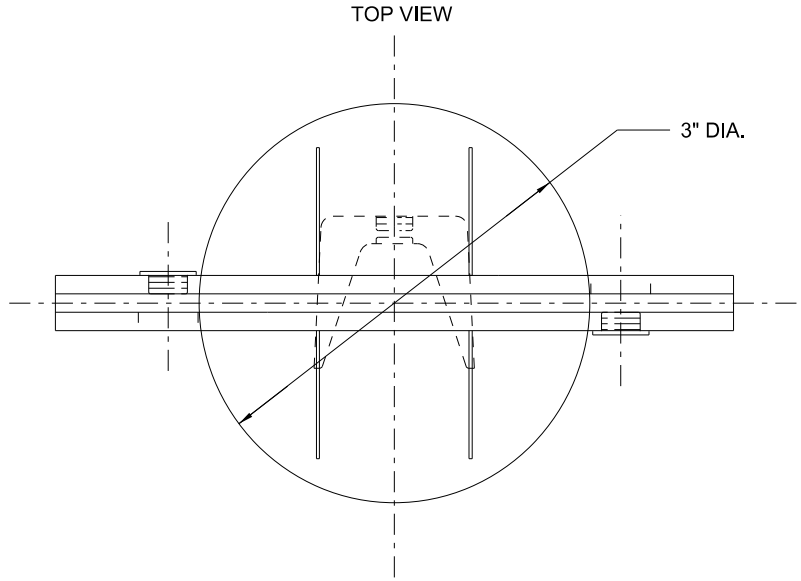

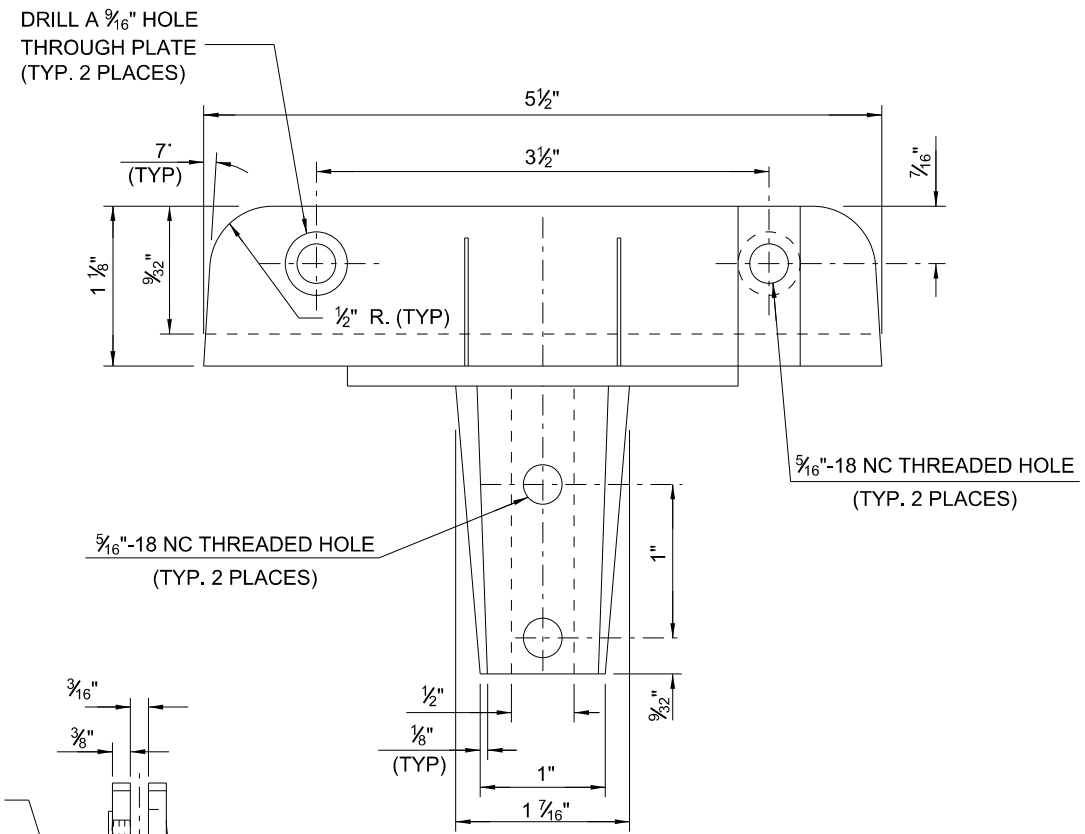

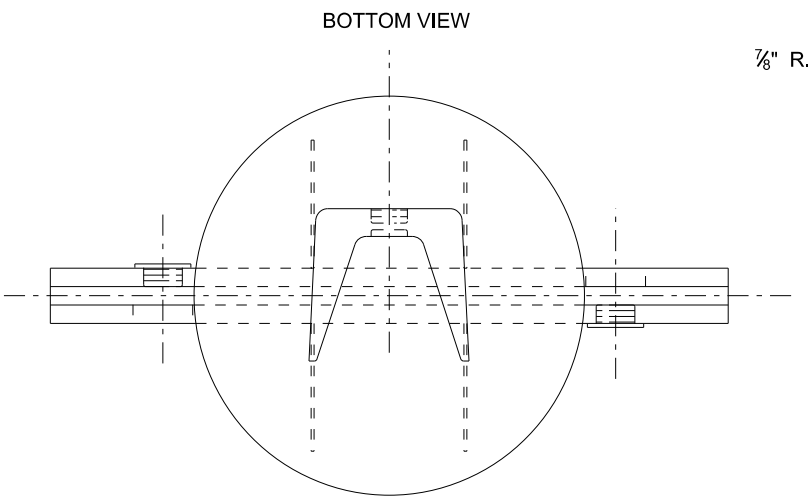

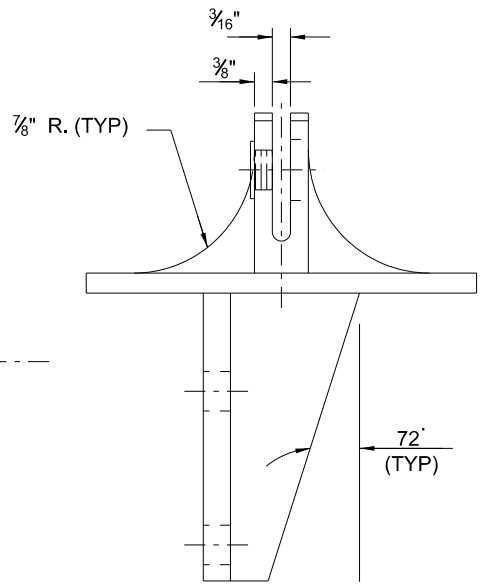

NOTES:

1. MATERIAL SHALL BE CAST ALUMINUM.
2. USE GRADE # 2, ZINC COATED, 18 NC THREAD, 1" X 5/16" BOLT TO ATTACH SIGN TO BRACKET.

MARICOPA COUNTY DEPARTMENT OF TRANSPORTATION	STREET SIGN POST CAP (FOR "U" CHANNEL POST)	DATE:	DETAIL NO.
STANDARD DETAIL		05/01/2004	2062-4

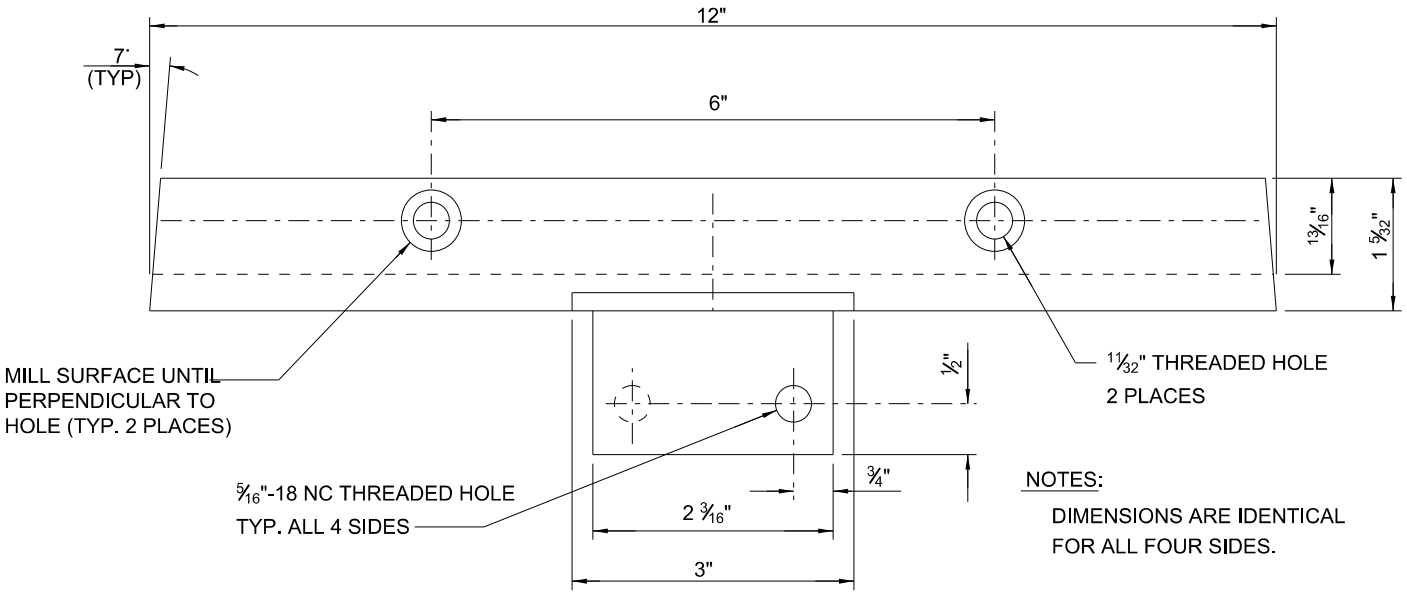

NOTES:

DIMENSIONS ARE IDENTICAL
FOR ALL FOUR SIDES.

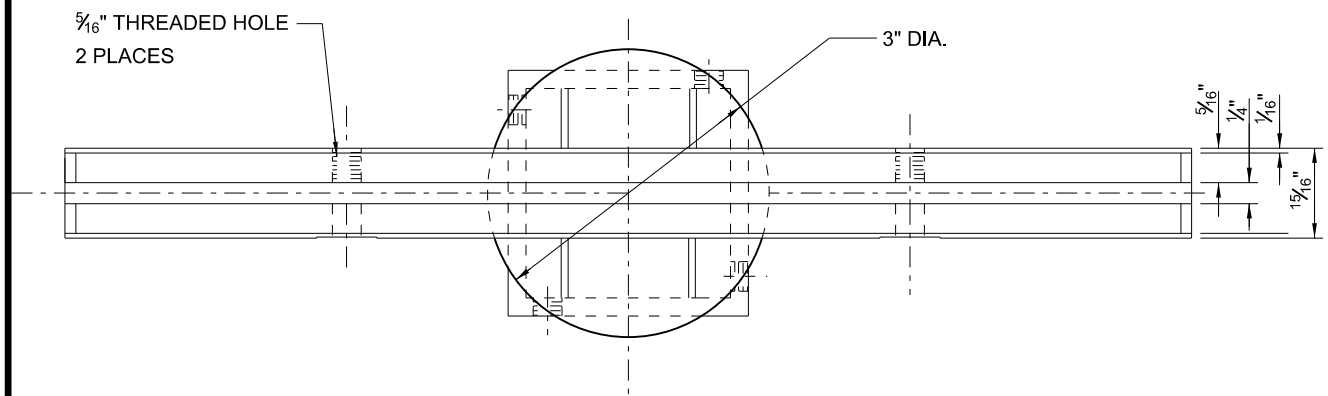

NOTES:

1. MATERIAL SHALL BE CAST ALUMINUM.
2. POST CAP SHALL BE SUPPLIED WITH TWO (2)' VANDAL PROOF' 5/16" X3/4"-18 NC MACHINE SCREWS AND TWO (2) 'VANDAL PROOF' 5/16" X3/16"-18 SET SCREWS.
3. USE GRADE # 2, ZINC COATED, 18 NC THREAD, 1½" X 5/16" BOLT TO ATTACH POST CAP TO THE POST.
4. USE GRADE # 2, ZINC COATED, 18 NC THREAD, 1" X 5/16" BOLT TO ATTACH SIGN TO BRACKET.

MARICOPA COUNTY DEPARTMENT OF TRANSPORTATION	(12") STREET SIGN POST CAP	DATE:	DETAIL NO.
STANDARD DETAIL		05/01/2004	2062-5

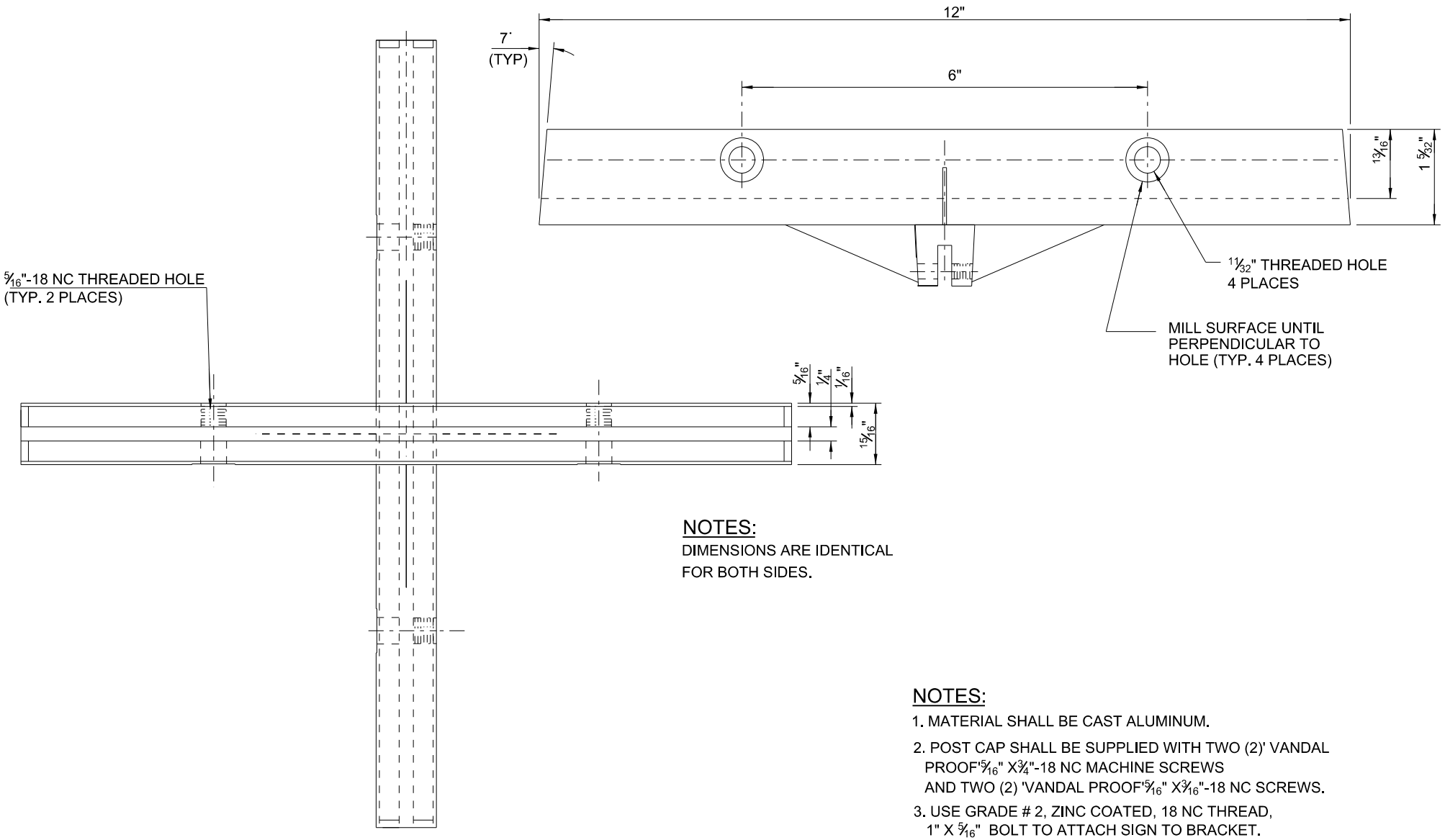

NOTES:
DIMENSIONS ARE IDENTICAL
FOR BOTH SIDES.

NOTES:

1. MATERIAL SHALL BE CAST ALUMINUM.
2. POST CAP SHALL BE SUPPLIED WITH TWO (2)' VANDAL PROOF'5/16" X3/4"-18 NC MACHINE SCREWS AND TWO (2) 'VANDAL PROOF'5/16" X3/16"-18 NC SCREWS.
3. USE GRADE # 2, ZINC COATED, 18 NC THREAD, 1" X 5/16" BOLT TO ATTACH SIGN TO BRACKET.

MARICOPA COUNTY DEPARTMENT OF TRANSPORTATION	(12") STREET SIGN SEPARATOR BRACKET	DATE:	DETAIL NO.
STANDARD DETAIL		05/01/2004	2062-6

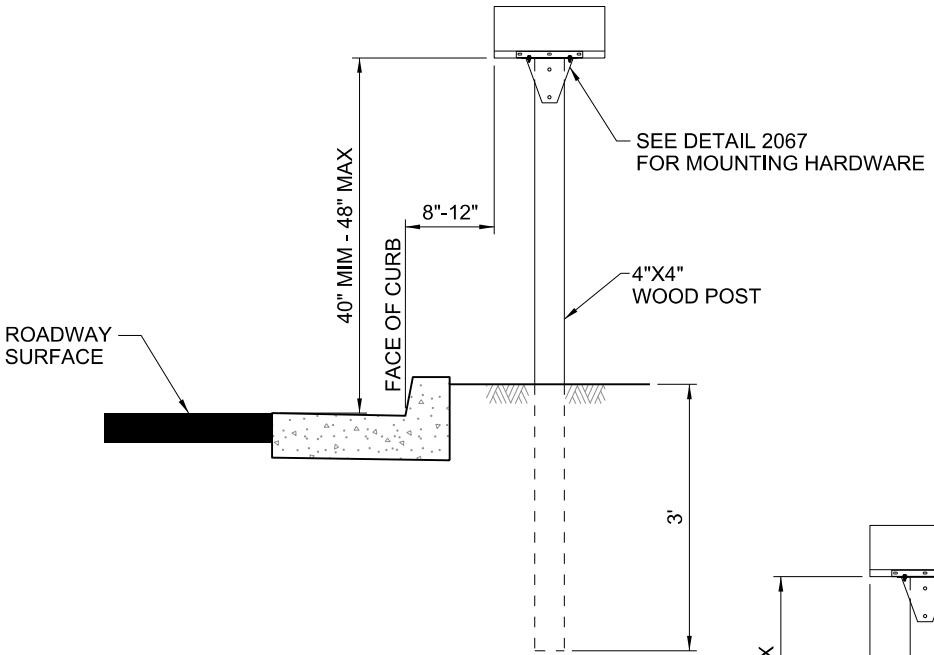

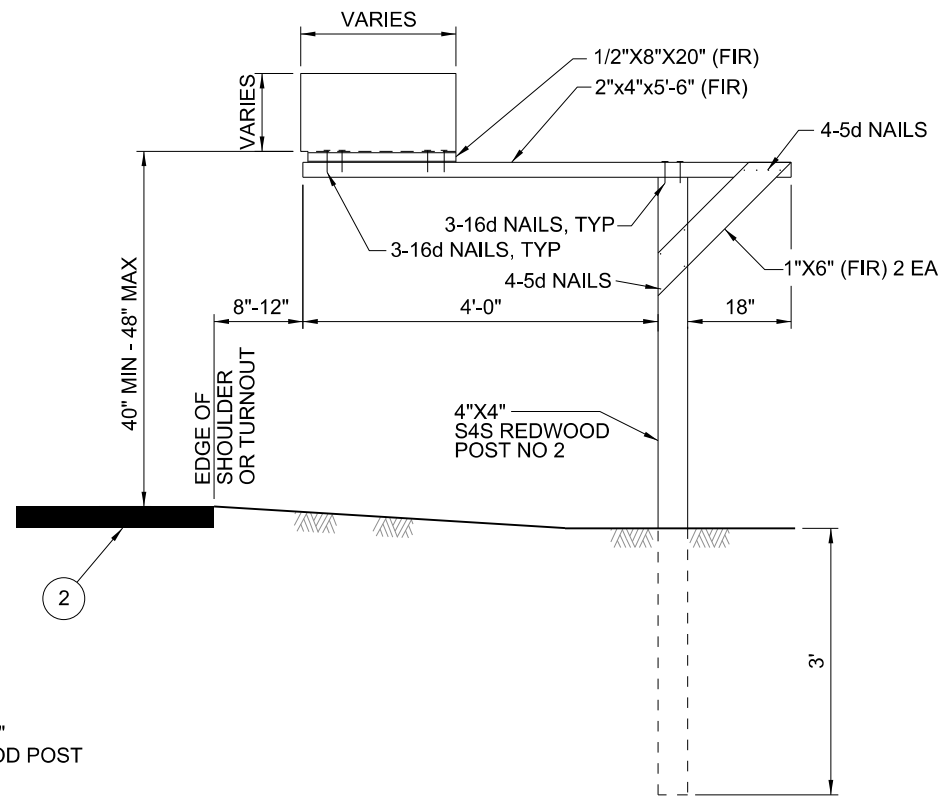

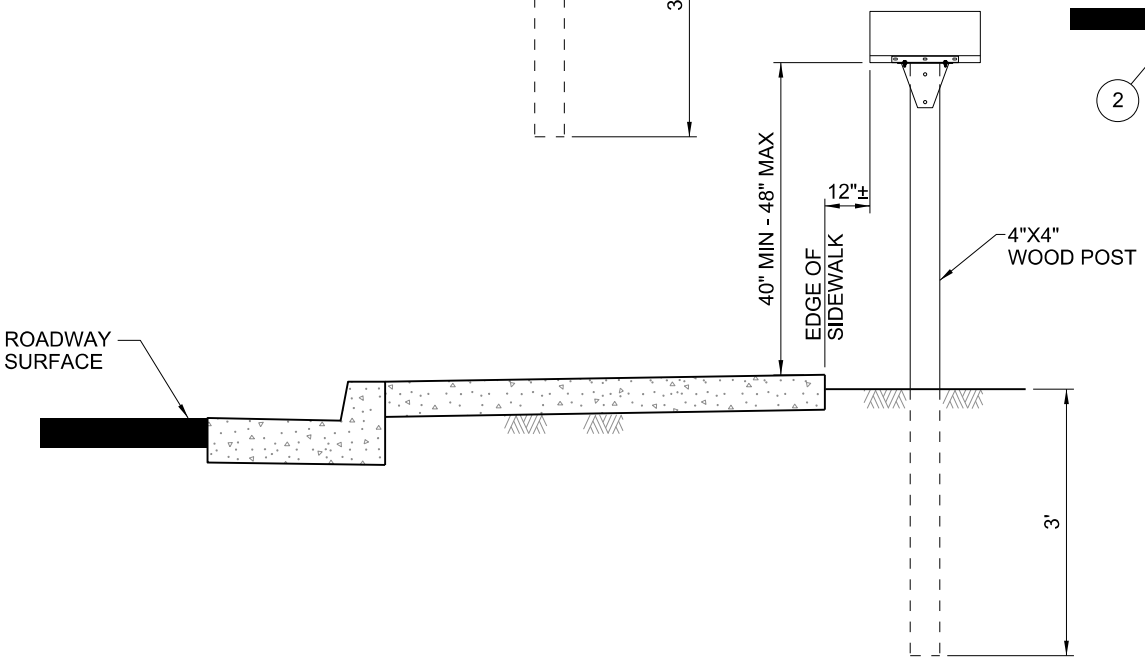

NOTES:

1. MAILBOX SUPPORT SHALL BE A 4"X4" S4S REDWOOD POST NO. 2, PENA-TREATED SOUTHERN PINE, OR EQUIVALENT. ALTERNATIVE MAILBOX SUPPORTS ARE SUBJECT TO MCDOT APPROVAL.

2. DESIGN SHOULDER TO HAVE A MINIMUM OF 4 INCH DEPTH OF ABC FOR WIDTH OF SHOULDER TO ALLOW ALL WEATHER ACCESS.

3. MULTIPLE INSTALLATION OF SINGLE MAILBOXES SHALL BE SPACED AT 4' (MINIMUM) ON CENTER.

MARICOPA COUNTY DEPARTMENT OF TRANSPORTATION	MAILBOX INSTALLATION	DATE:	DETAIL NO.
STANDARD DETAIL		09/26/2017	2066

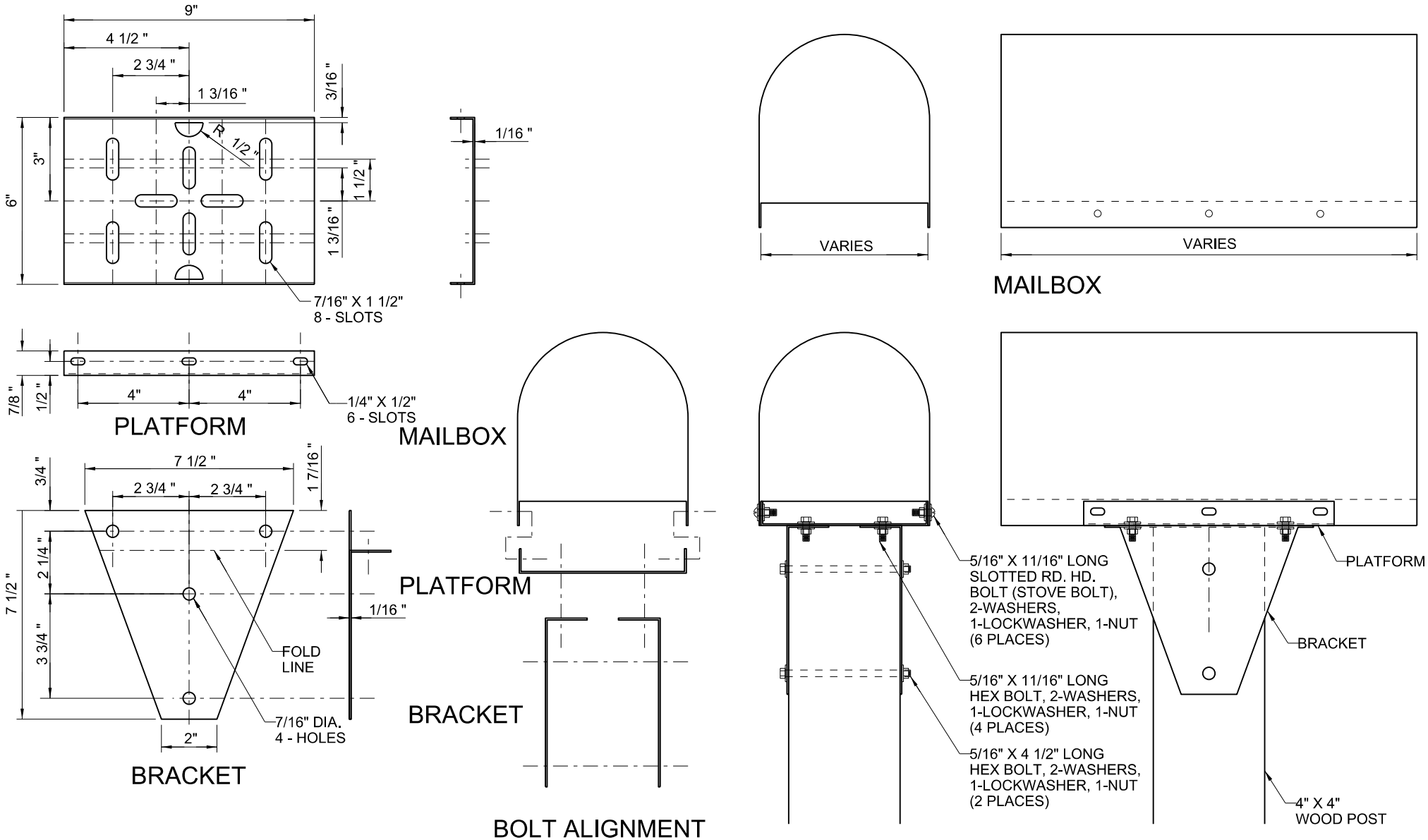

MARICOPA COUNTY DEPARTMENT OF TRANSPORTATION	MAILBOX INSTALLATION HARDWARE	DATE:	DETAIL NO.
STANDARD DETAIL		05/15/14	2067

THROUGH ROAD TRAFFIC SPEED	D1	
	LOW VOLUME	ADT >400 VPD
0-35 mph	65'	200'
>35 mph	65'	300'

THROUGH ROAD TRAFFIC SPEED	D2	
	LOW VOLUME	ADT >400 VPD
0-35 mph	100'	100'
> 35 MPH	150'	200'

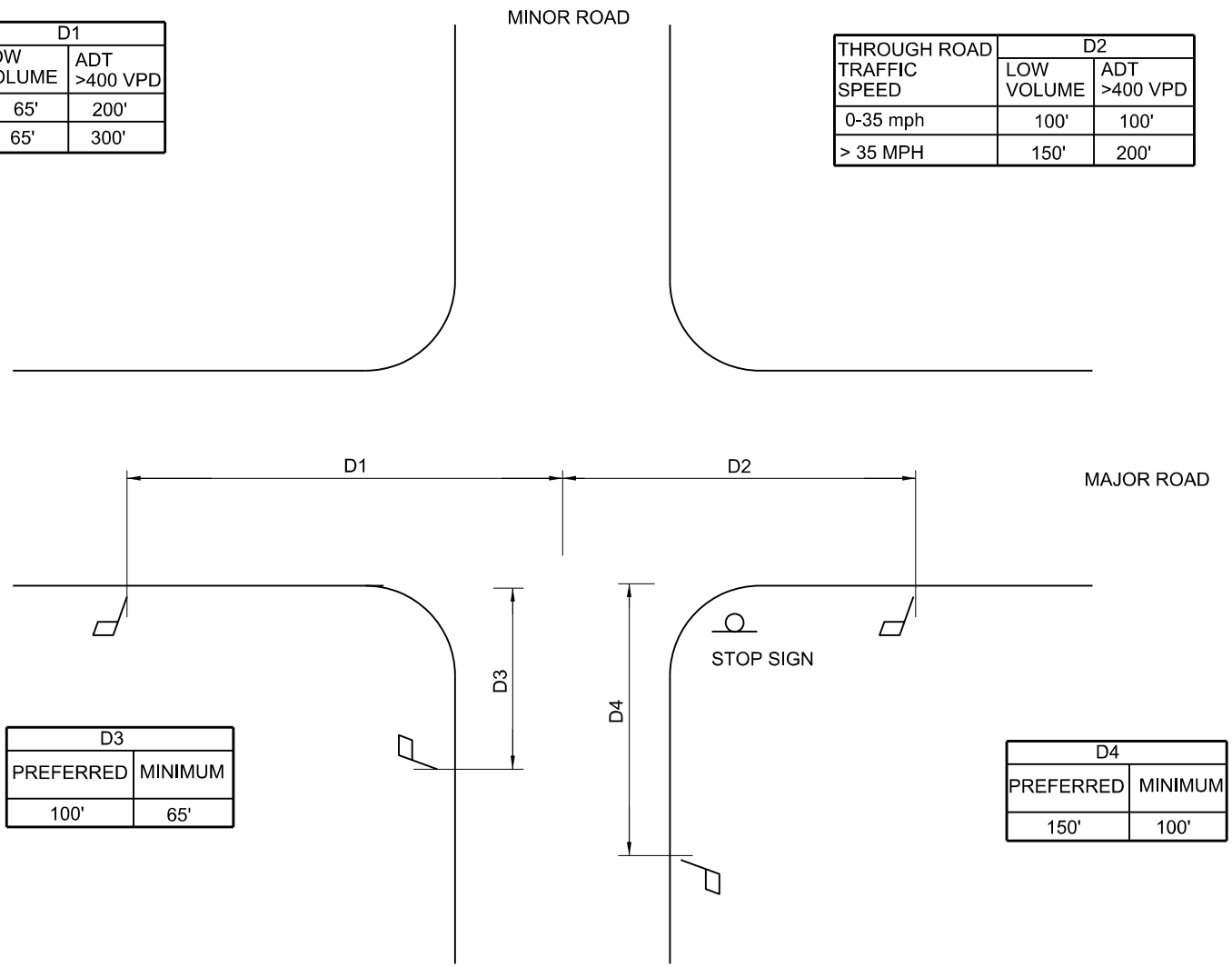

D3	
PREFERRED	MINIMUM
100'	65'

D4	
PREFERRED	MINIMUM
150'	100'

MARICOPA COUNTY DEPARTMENT OF TRANSPORTATION	RECOMMENDED MAILBOX CLEARANCES AT INTERSECTIONS	DATE:	DETAIL NO.
STANDARD DETAIL		06/04/2003	2069

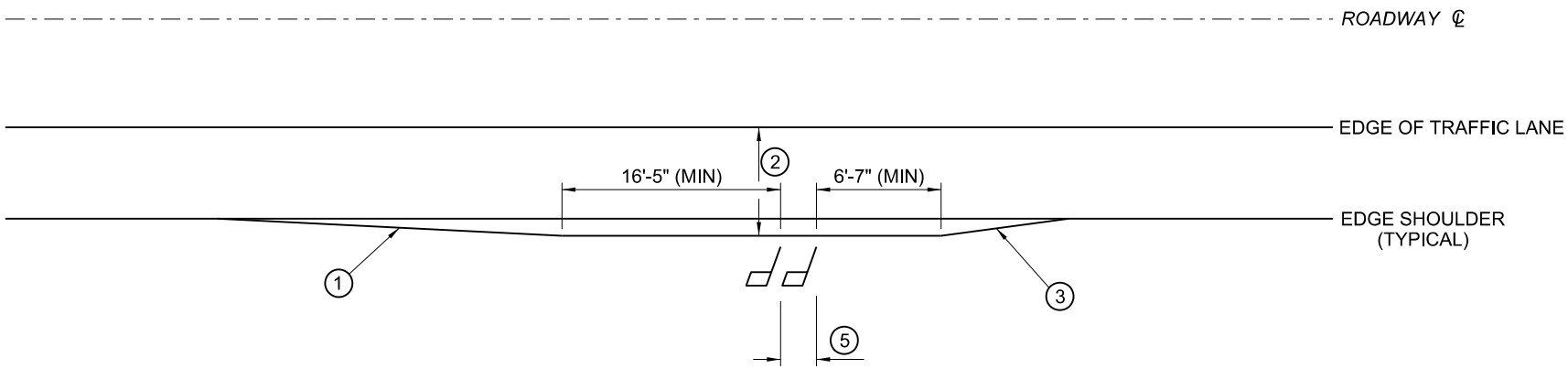

NOTES:

1. TAPER 20:1 FOR SPEEDS OF 40 MPH OR GREATER, 4:1 FOR LESS THAN 40 MPH.
2. PULLOUT WIDTH 12' FOR SPEEDS OF 40 MPH OR GREATER, 10' FOR SPEEDS LESS THAN 40 MPH.
3. TAPER 12:1 FOR SPEEDS OF 40 MPH OR GREATER, 5:1 FOR LESS THAN 40 MPH.
4. PROVIDE STABALIZED SURFACE (AS MINIMUM) FOR ALL MAILBOX TURNOUTS (PAVED TUNOUTS ARE PREFERRED).
5. USE AT LEAST 4' SPACING BETWEEN MAILBOXES.

MARICOPA COUNTY DEPARTMENT OF TRANSPORTATION	TYPICAL MAILBOX TURNOUT	DATE:	DETAIL NO.
STANDARD DETAIL		06/04/2003	2070

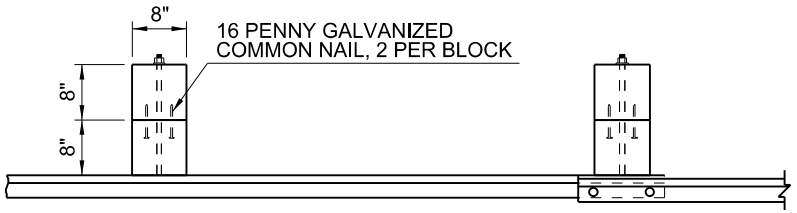

PLAN
G4 (1W) SYSTEM

TRAFFIC

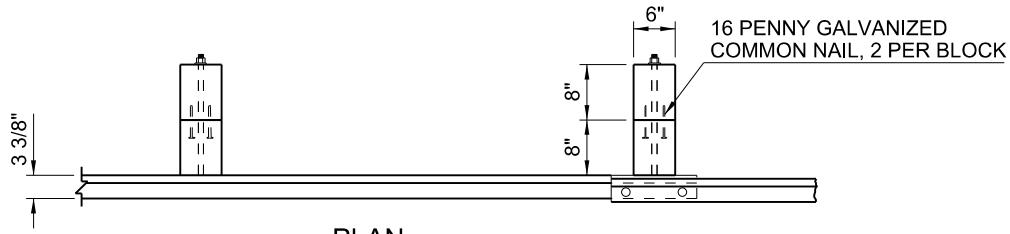

PLAN
G4 (2W) SYSTEM

TRAFFIC

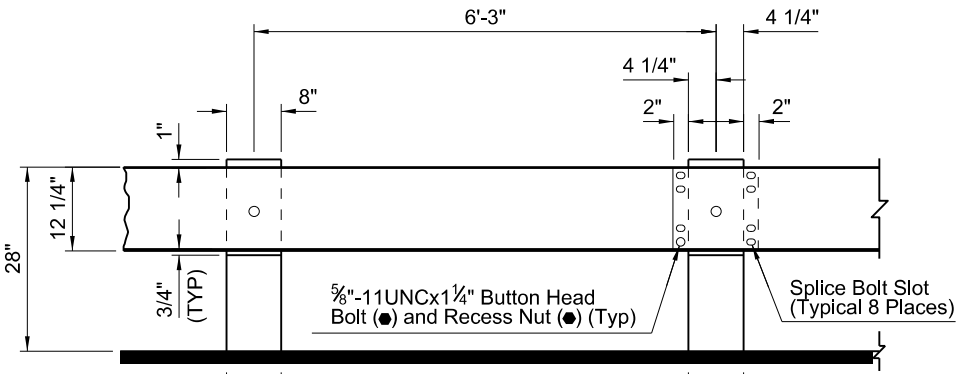

ELEVATION
G4 (1W) SYSTEM

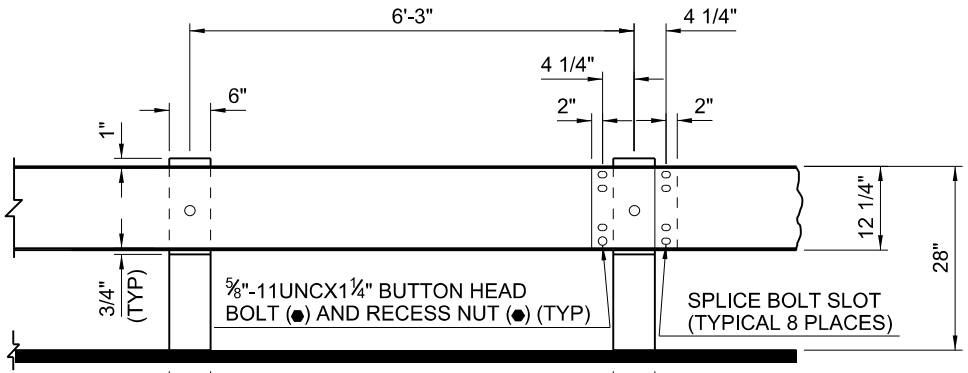

ELEVATION
G4 (2W) SYSTEM

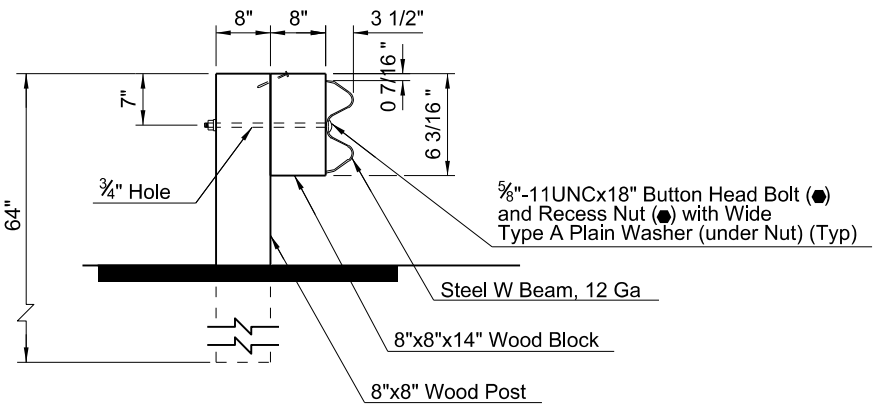

SECTION G4(1W)

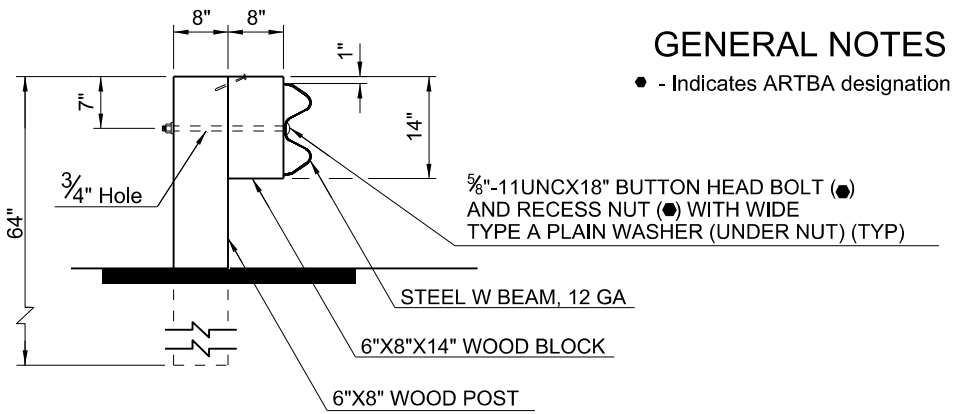

SECTION G4(2W)

GENERAL NOTES

● - Indicates ARTBA designation

MARICOPA COUNTY DEPARTMENT OF TRANSPORTATION	W-BEAM GUARDRAIL G4 (1W) AND G4 (2W) BLOCKED OUT TIMBER POST	DATE:	DETAIL NO.
STANDARD DETAIL		12/15/2015	2801

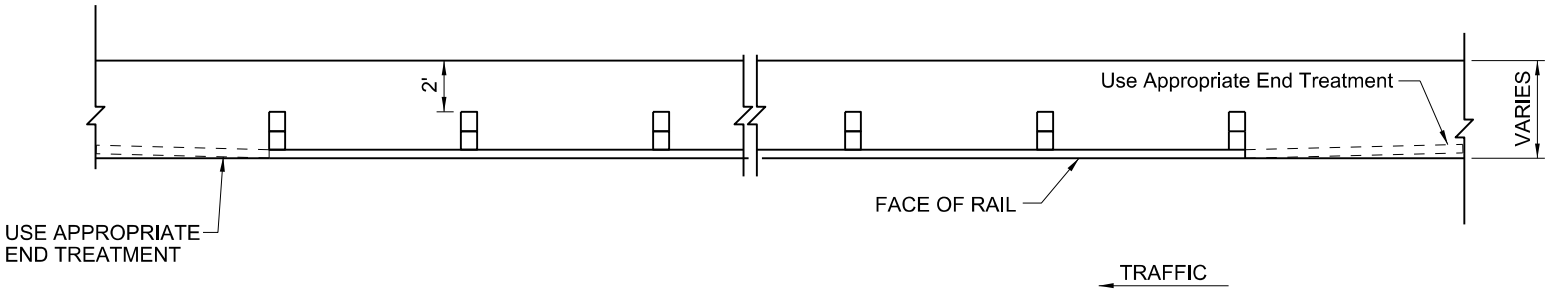

PLAN

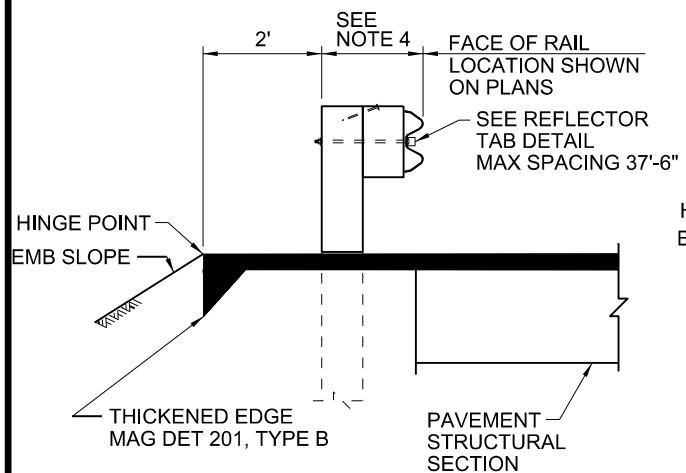

WITHOUT CURB

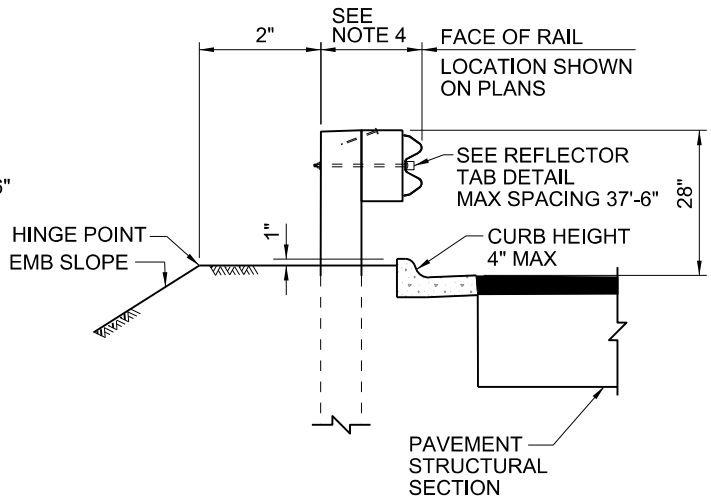

WITH CURB & GUTTER

SECTION

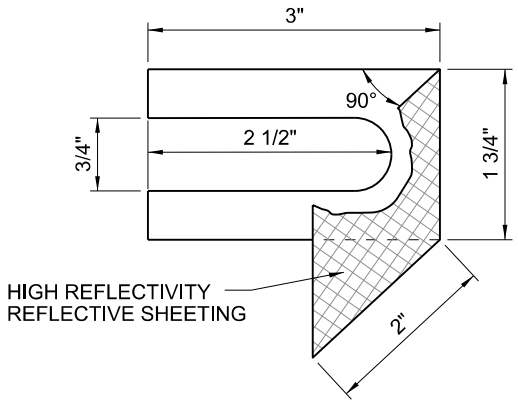

REFLECTOR TAB ISOMETRIC DETAIL

NOTES:

1. THE CONTROL HEIGHT FOR GUARDRAIL SYSTEM IS 28" TO THE TOP OF RAIL, MEASURED AT THE FACE OF RAIL FROM THE NORMAL FINISHED PAVEMENT OR GROUND SURFACE ELEVATION.
2. SEE DETAIL 3016 FOR MEASUREMENT LIMITS.
3. ASPHALT THICKNESS BEHIND FACE OF RAIL SHALL BE AT LEAST 1.5" AND NO GREATER THAN 2.5" FOR INSTATLLATIONS WITHOUT CURB.
4. WIDTH OF GUARDRAIL INSTALLATION IS DEPENDENT ON POST TYPE. FOR WOOD POST (AS SHOWN) THE DIMENSION IS APPROXIMATELY 19.5". FOR STEEL POST THE DIMENSION IS APPROXIMATELY 17".

MARICOPA COUNTY DEPARTMENT OF TRANSPORTATION	28" HIGH STRONG POST W- BEAM GUARDRAIL INSTALLATION	DATE:	DETAIL NO.
STANDARD DETAIL		10/03/2017	2802

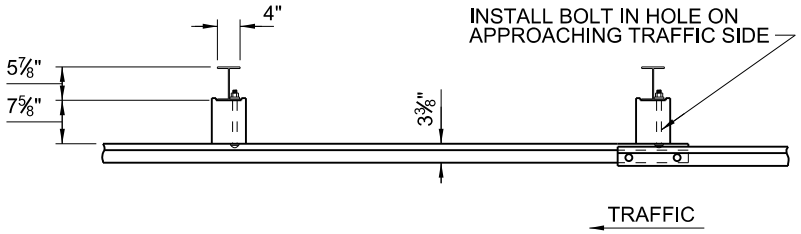

PLAN

GENERAL NOTES

1. THE CONTROL HEIGHT FOR GUARDRAIL SYSTEM IS 28" TO THE TOP OF RAIL, MEASURED AT THE FACE OF RAIL FROM THE NORMAL FINISHED PAVEMENT ELEVATION.
2. GUARDRAIL SHALL BE LAPPED IN THE DIRECTION OF ADJACENT TRAFFIC.

● INDICATES AASHTO, AGC & ARTBA TASK FORCE 13 REPORT DESIGNATION

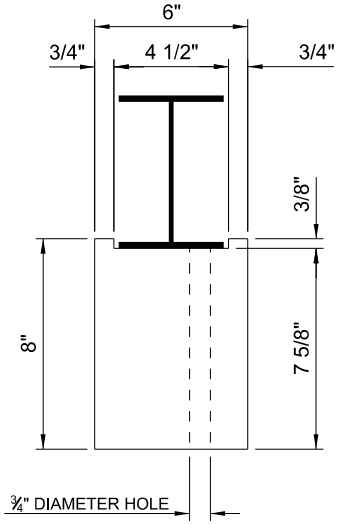

TOP VIEW

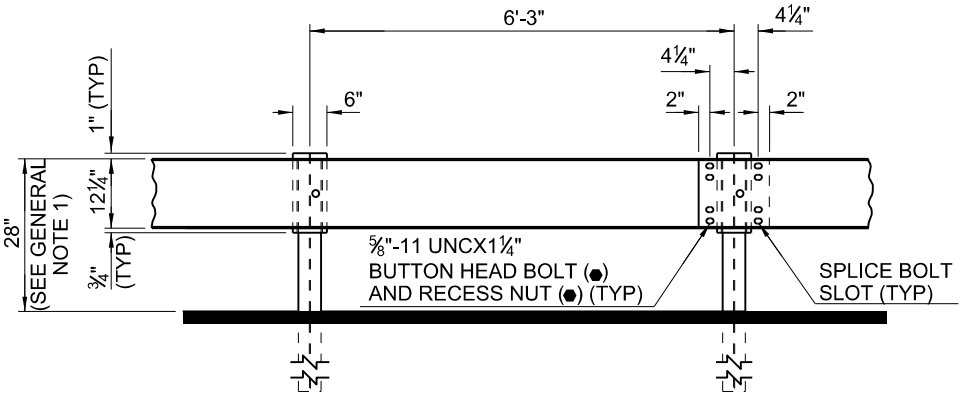

ELEVATION

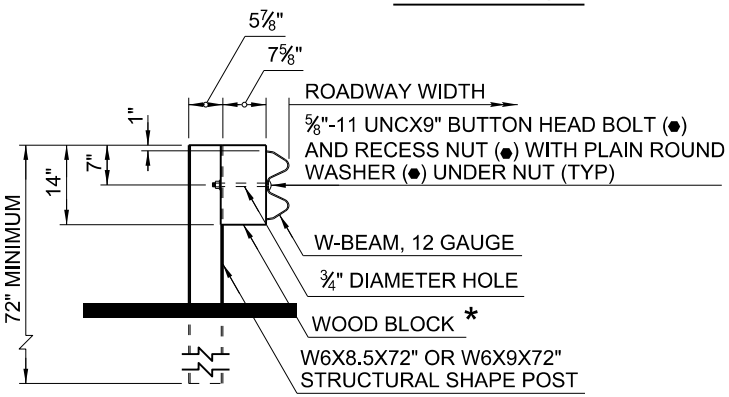

SECTION WITHOUT CURB

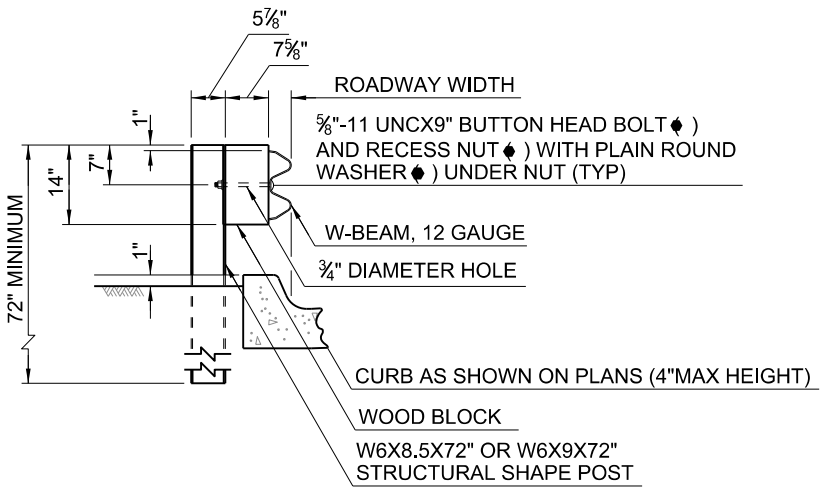

SECTION WITH CURB

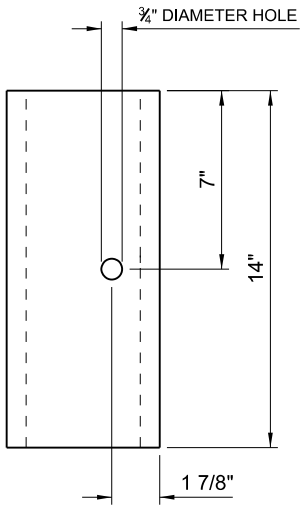

FRONT VIEW

WOOD BLOCK DETAIL

MARICOPA COUNTY DEPARTMENT OF TRANSPORTATION	W-BEAM GUARDRAIL G4 (1S) BLOCKED OUT STEEL POST	DATE:	DETAIL NO.
STANDARD DETAIL		12/01/2015	2803

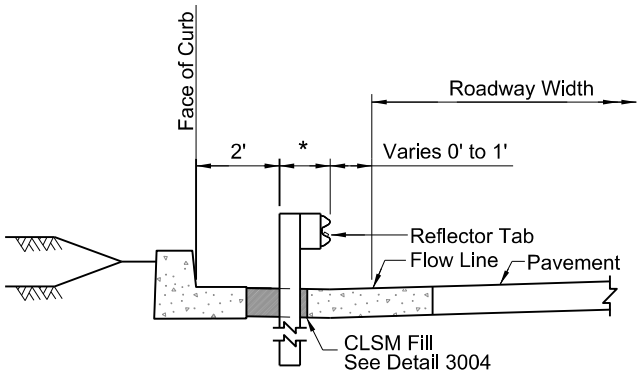

SECTION A-A

* WIDTH VARIES WITH POST TYPE

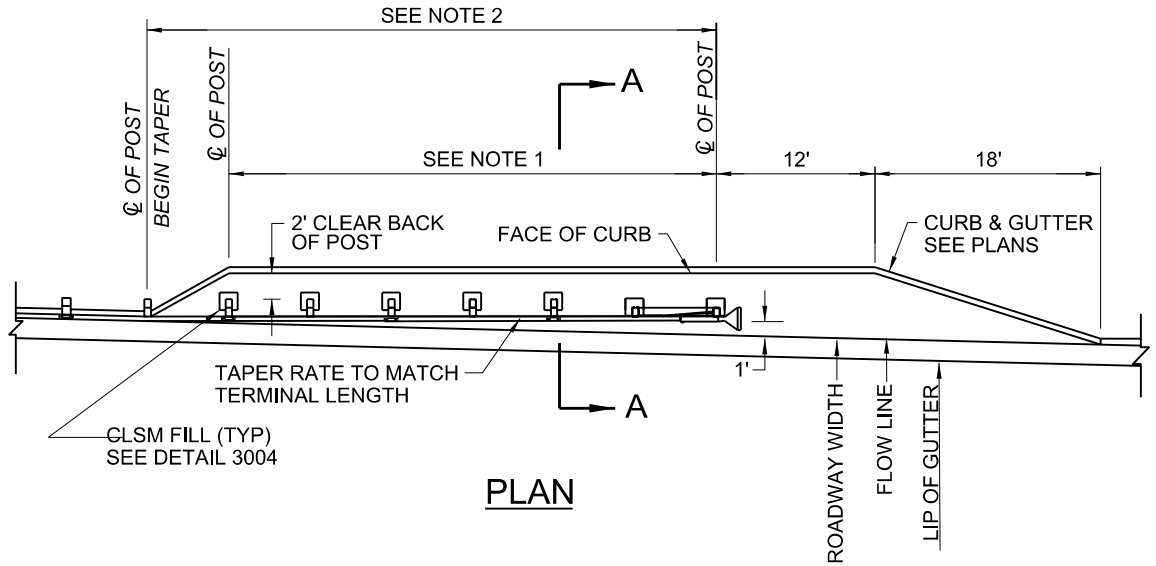

PLAN

NOTES:

1. DISTANCE = 43.75' FOR 50.0' TERMINAL LENGTH
   DISTANCE = 37.5' FOR 37.5' TERMINAL LENGTH
   DISTANCE = 18.75' FOR 25.0' TERMINAL LENGTH

2. DISTANCE = 50.0' FOR 50.0' TERMINAL LENGTH
   DISTANCE = 37.5' FOR 37.5' TERMINAL LENGTH
   DISTANCE = 25.0' FOR 25.0' TERMINAL LENGTH

MARICOPA COUNTY DEPARTMENT OF TRANSPORTATION	GUARDRAIL: TANGENT W-BEAM TERMINAL LAYOUT WITH CURB & GUTTER	DATE:	DETAIL NO.
STANDARD DETAIL		12/15/2015	2805

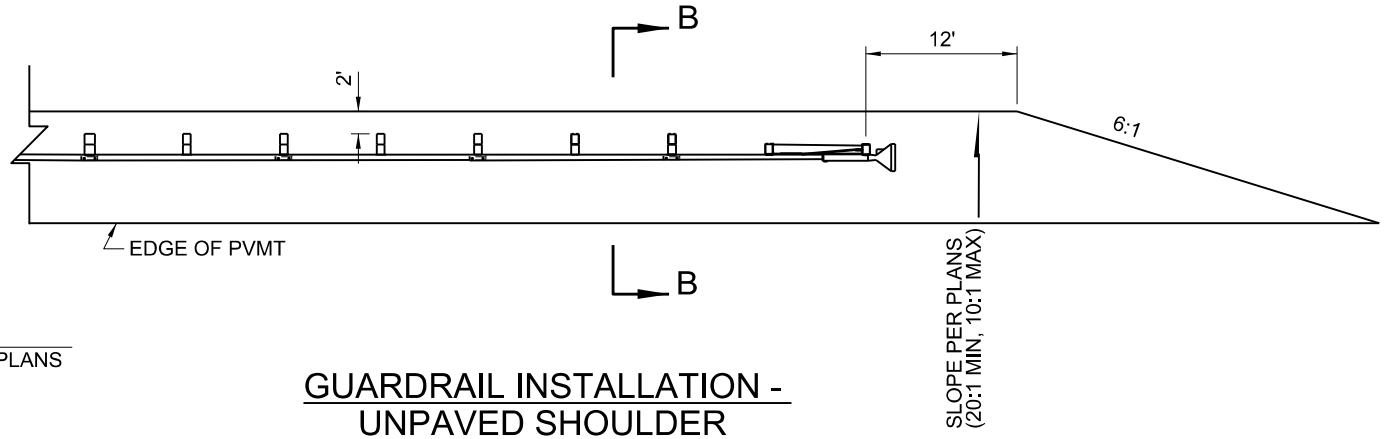

GUARDRAIL INSTALLATION - UNPAVED SHOULDER

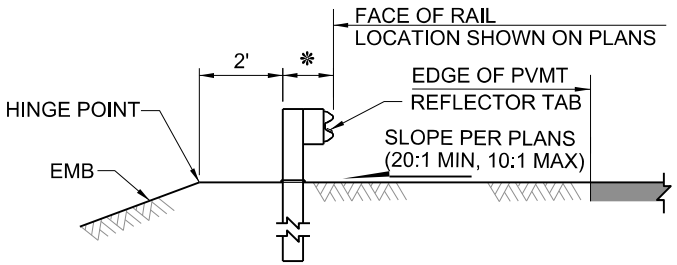

SECTION B-B

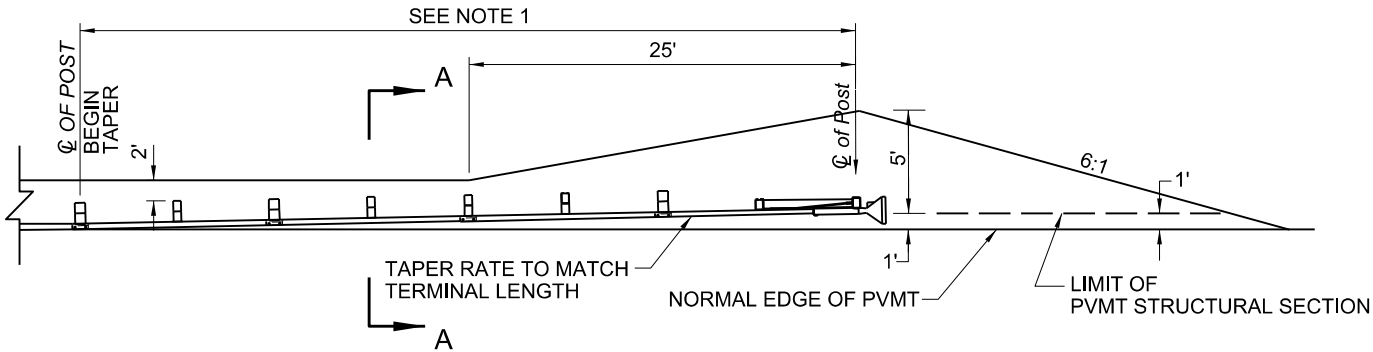

GUARDRAIL INSTALLATION - PAVED SHOULDER

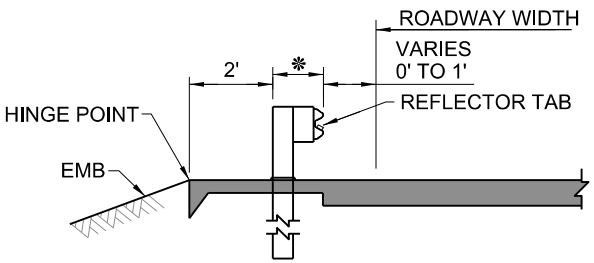

SECTION A-A

* WIDTH VARIES WITH POST TYPE

NOTES:

1. DISTANCE = 50' FOR 50' TERMINAL LENGTH
   DISTANCE = 37.5' FOR 37.5' TERMINAL LENGTH
   DISTANCE = 25' FOR 25' TERMINAL LENGTH

MARICOPA COUNTY DEPARTMENT OF TRANSPORTATION	GUARDRAIL:TANGENT W-BEAM TERMINAL LAYOUT WITHOUT CURB AND GUTTER	DATE:	DETAIL NO.
STANDARD DETAIL		12/15/2015	2806

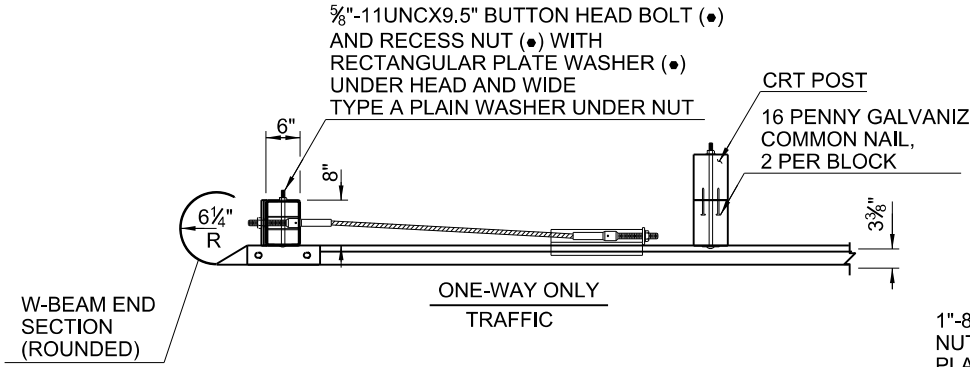

PLAN

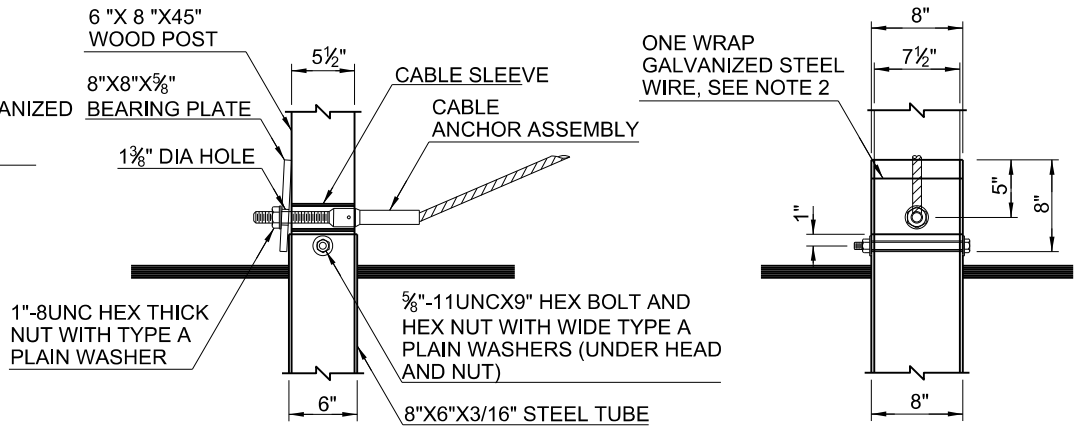

FRONT VIEW

SIDE VIEW

BEARING PLATE DETAIL

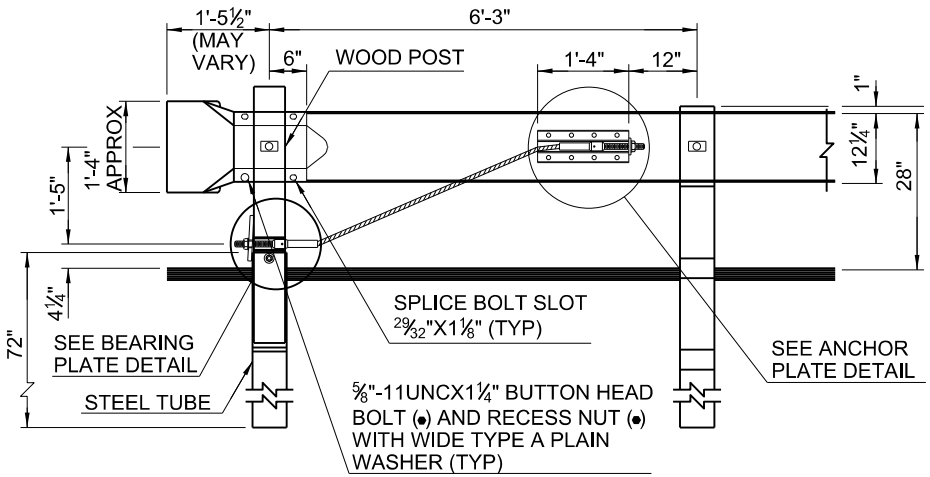

ELEVATION

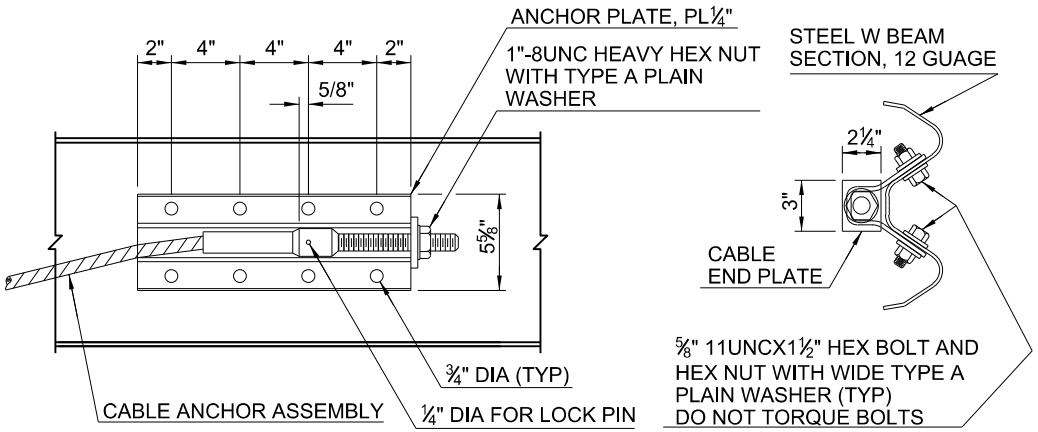

FRONT VIEW

SIDE VIEW

ANCHOR PLATE DETAIL

GENERAL NOTES

1. THE CABLE ASSEMBLY SHALL BE TIGHTENED TO REMOVE SLACK.
2. TO ENSURE THAT THE BEARING PLATE REMAINS IN POSITION, ONE WRAP OF 14 GAUGE GALVANIZED STEELWIRE SHALL BE WRAPPED AROUND THE TERMINAL POST NEAR THE TOP OF THE PLATE.
3. SEE W-BEAM END SECTION (ROUNDED), ARTBA STD. RE-6-79, FOR DIMENSION VARIABLES.
4. SEE STD. 3016 FOR MEASUREMENT LIMITS.

(•) INDICATES ARTBA DESIGNATION

MARICOPA COUNTY DEPARTMENT OF TRANSPORTATION	DEPARTURE END TERMINAL	DATE:	DETAIL NO.
STANDARD DETAIL		07/30/2015	2807

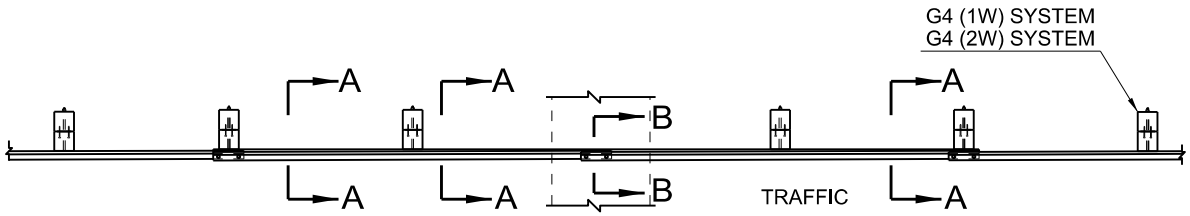

PLAN

SYMBOLS

- AS DESIGNATED BY AASHTO-AGC-ARTB JOINT COMMITTEE TASK FORCE 13 REPORT
- INDICATES W BEAM SPLICE CONNECTION.
- 72" POST

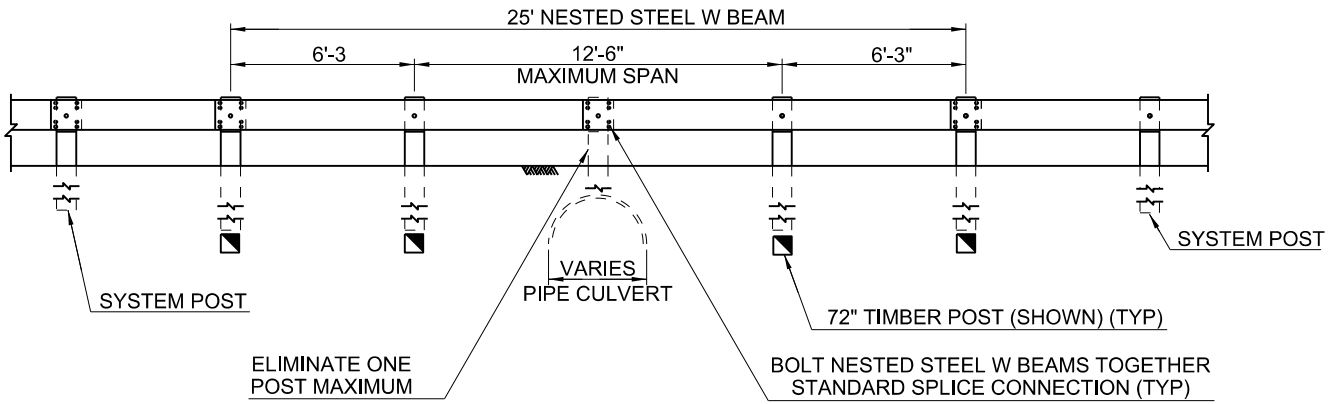

NESTED STEEL W BEAM - TYPE 1 - SHORT SPAN
(SPLICE CONNECTION INSIDE SPAN) LENGTH = 25'

ELEVATION

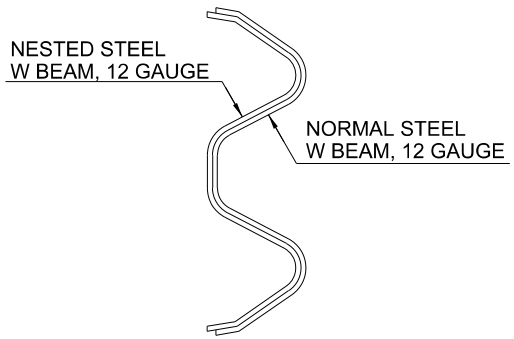

SECTION A-A

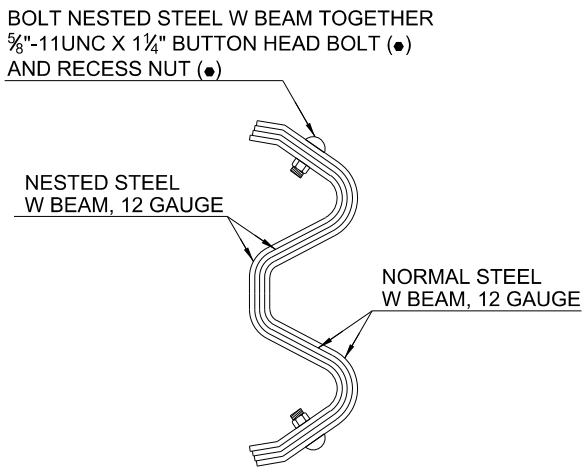

SECTION B-B

MARICOPA COUNTY DEPARTMENT OF TRANSPORTATION	NESTED GUARDRAIL TYPE 1	DATE:	DETAIL NO.
STANDARD DETAIL		12/09/2015	2808-1

SYMBOLS

- ● AS DESIGNATED BY AASHTO-AGC-ARTB JOINT COMMITTEE TASK FORCE 13 REPORT
- - INDICATES W BEAM SPLICE CONNECTION.
- ◪ - 72" POST

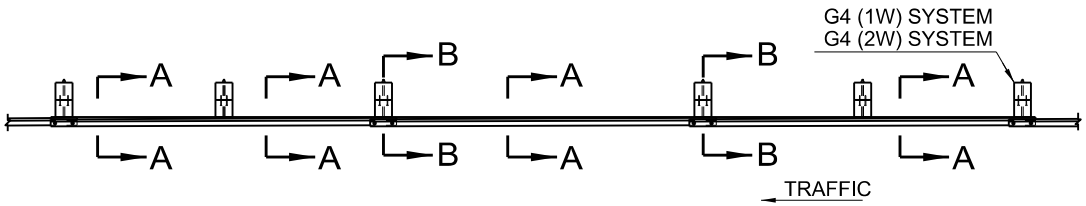

PLAN

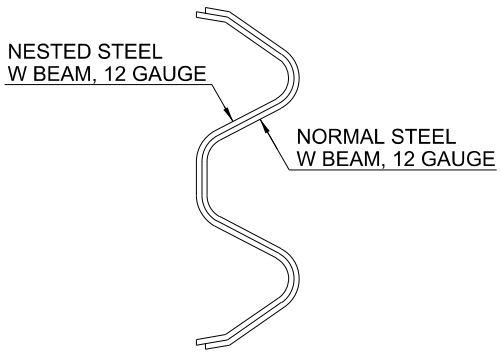

SECTION A-A

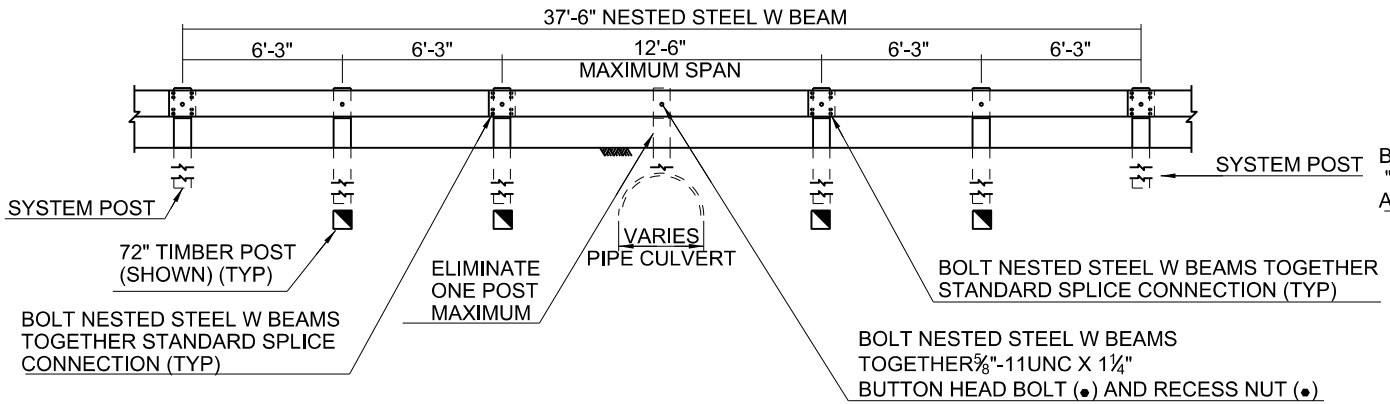

NESTED STEEL W BEAM - TYPE 2 - LONG SPAN
(SPLICE CONNECTION OUTSIDE SPAN) LENGTH = 37'-6"

ELEVATION

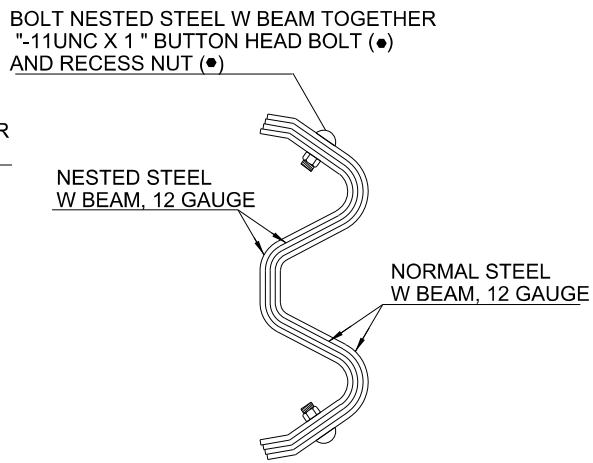

SECTION B-B

MARICOPA COUNTY DEPARTMENT OF TRANSPORTATION	NESTED GUARDRAIL TYPE 2	DATE:	DETAIL NO.
STANDARD DETAIL		12/09/2015	2808-2

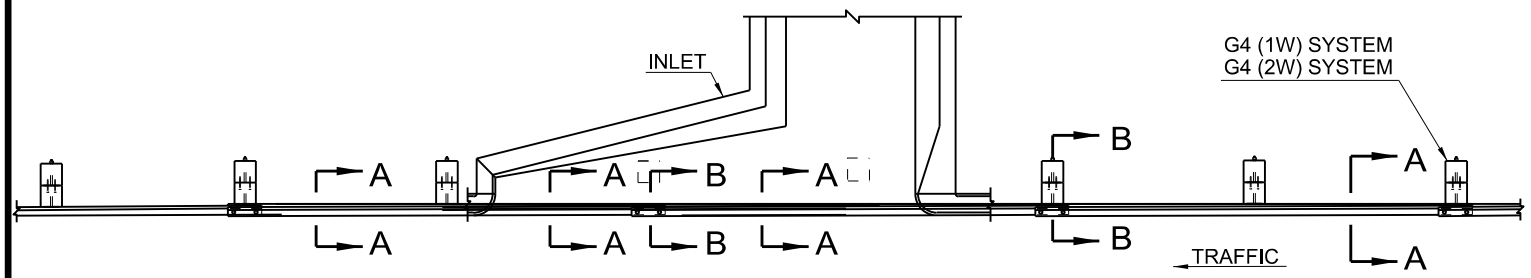

PLAN

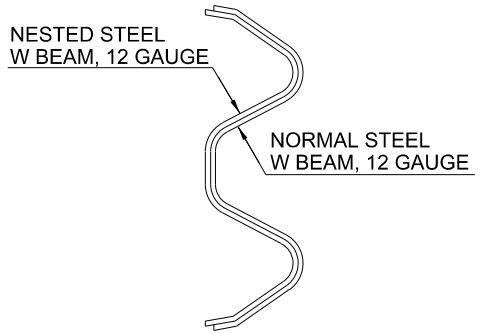

SECTION A-A

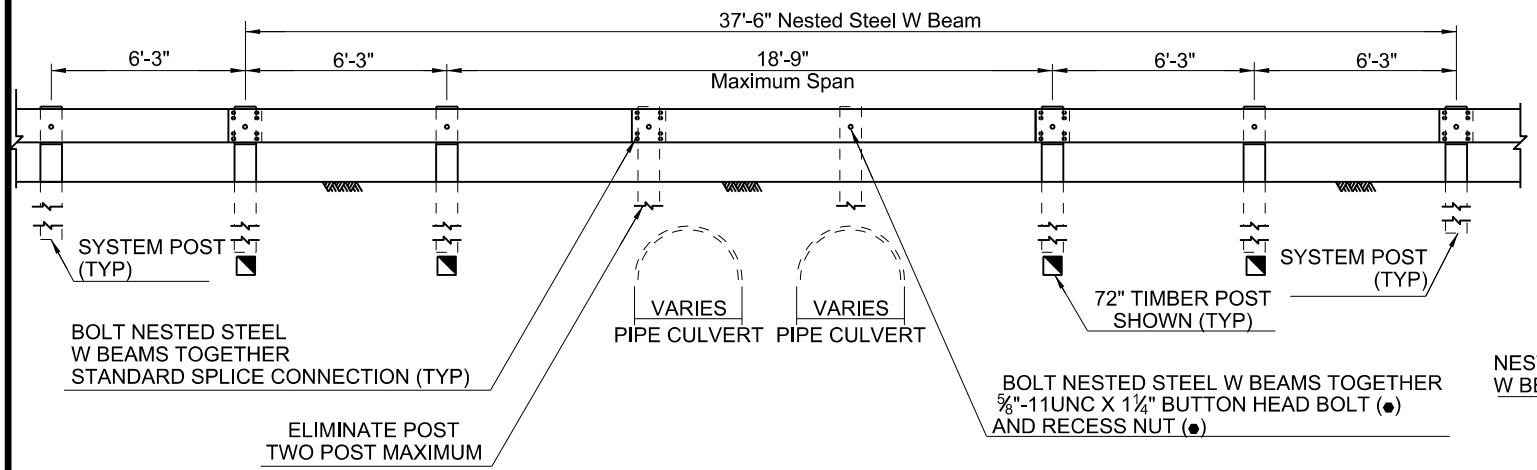

NESTED STEEL W BEAM - TYPE 3 - LONG SPAN
Length = 37'6"

ELEVATION

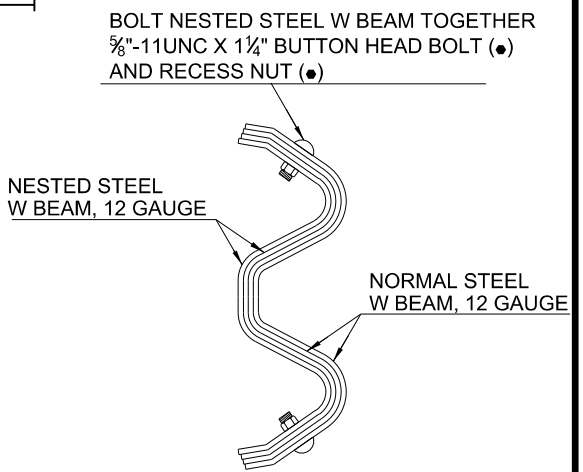

SECTION B-B

SYMBOLS

● AS DESIGNATED BY AASHTO-AGC-ARTB JOINT COMMITTEE TASK FORCE 13 REPORT

- INDICATES W BEAM SPLICE CONNECTION.

- 72" POST

MARICOPA COUNTY DEPARTMENT OF TRANSPORTATION	NESTED GUARDRAIL TYPE 3	DATE:	DETAIL NO.
STANDARD DETAIL		12/09/2015	2808-3

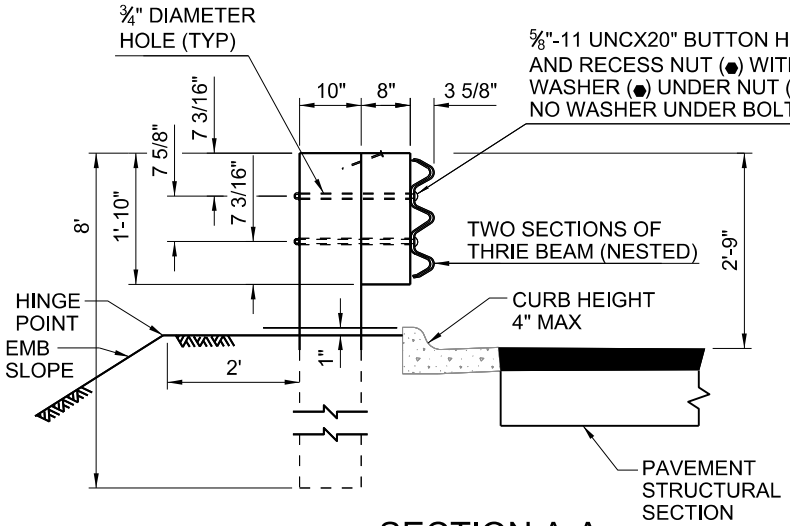

SECTION A-A
With Curb & Gutter

GENERAL NOTES

● AS DESIGNATED BY AASHTO-AGC-ARTBA JOINT COMMITTE TASK FORCE 13 REPORT

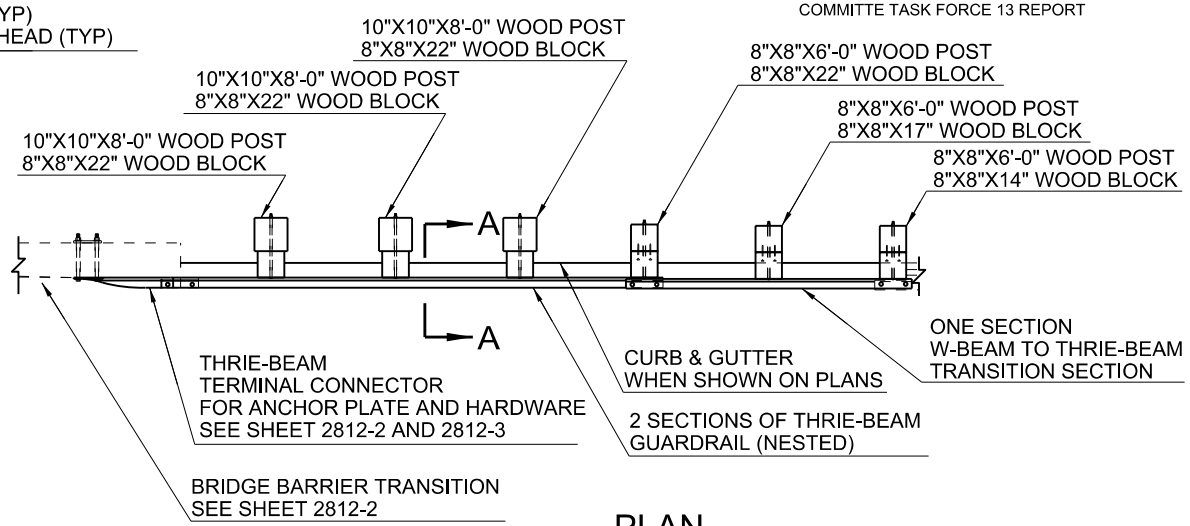

PLAN

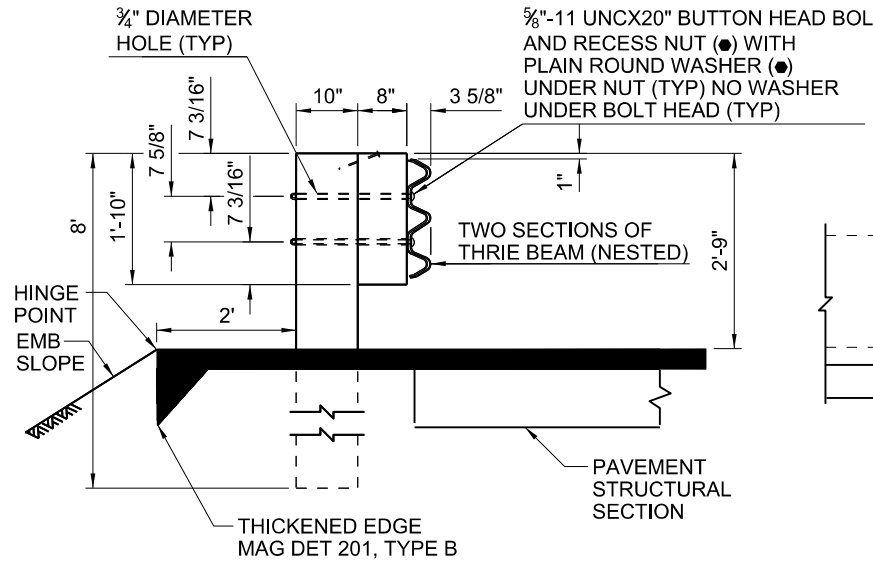

SECTION A-A
Without Curb

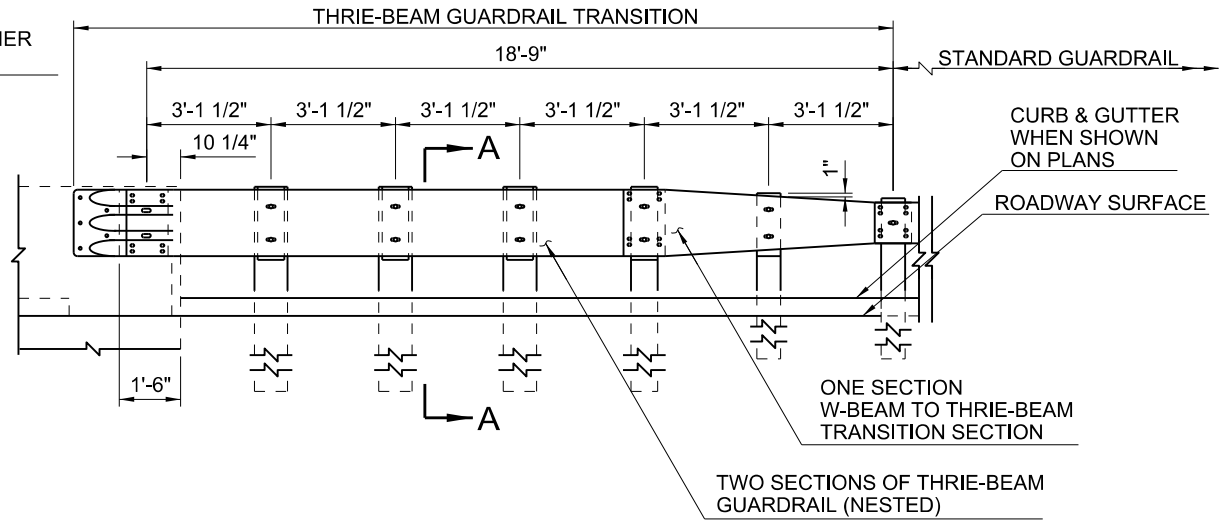

ELEVATION

MARICOPA COUNTY DEPARTMENT OF TRANSPORTATION	THRIE BEAM GUARDRAIL TRANSITION	DATE:	DETAIL NO.
STANDARD DETAIL		12/14/2015	2812-1

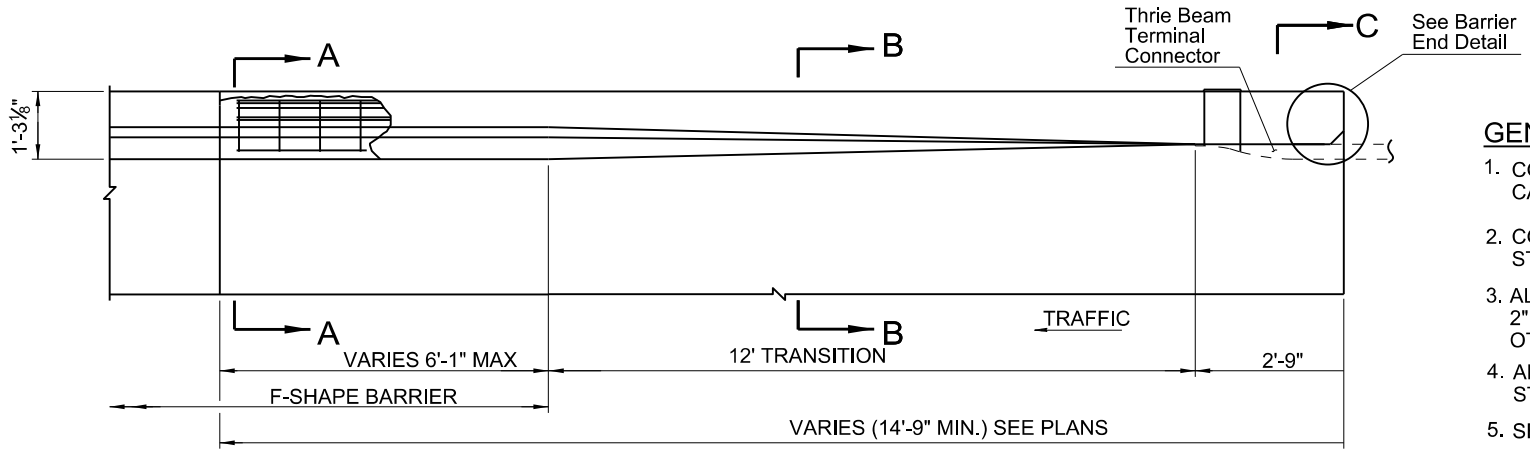

PLAN

GENERAL NOTES

1. CONCRETE SHALL BE CONSTRUCTED BY CAST-IN-PLACE USING FIXED FORMS.
2. CONCRETE SHALL BE CLASS A, DESIGN STRENGTH F'C = 3000 PSI.
3. ALL REINFORCING STEEL SHALL HAVE 2" MINIMUM CLEAR COVER UNLESS OTHERWISE NOTED.
4. ALL BEND DIMENSIONS FOR REINFORCING STEEL SHALL BE OUT-TO-OUT OF BARS.
5. SEE PLANS FOR APPROACH SLAB DETAILS

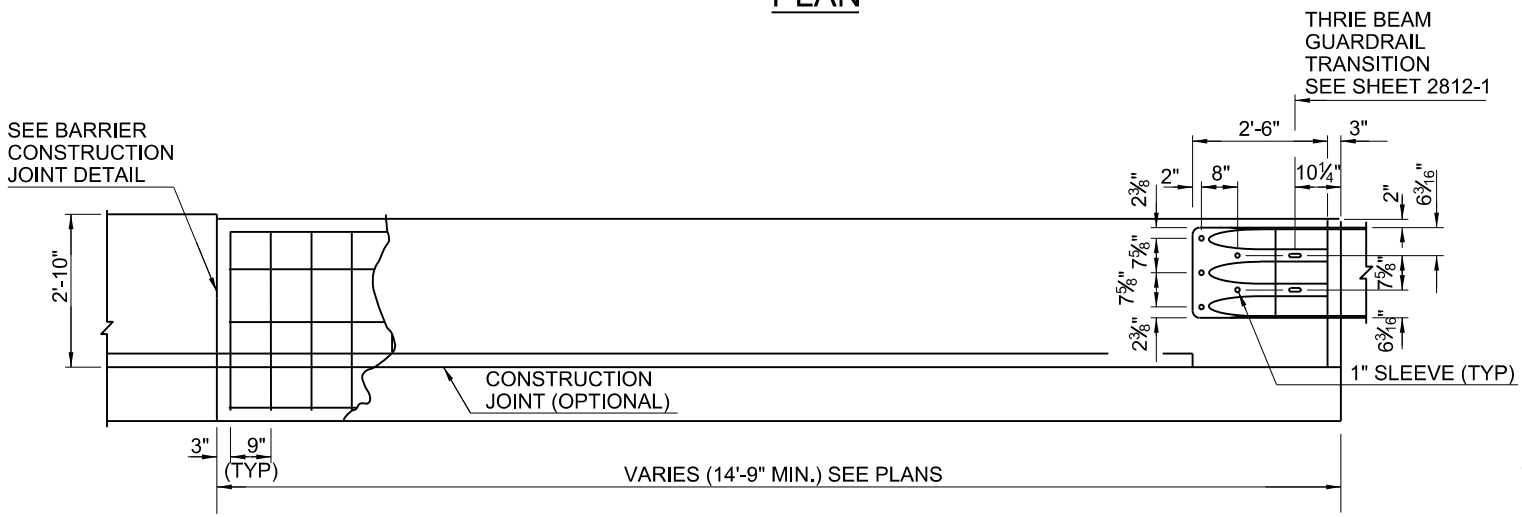

ELEVATION

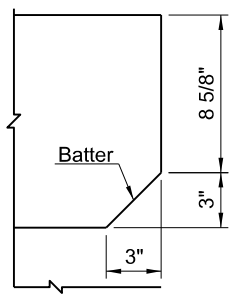

BARRIER END DETAIL

MARICOPA COUNTY DEPARTMENT OF TRANSPORTATION	BRIDGE BARRIER TRANSITION	DATE:	DETAIL NO.
STANDARD DETAIL		12/15/2015	2812-2

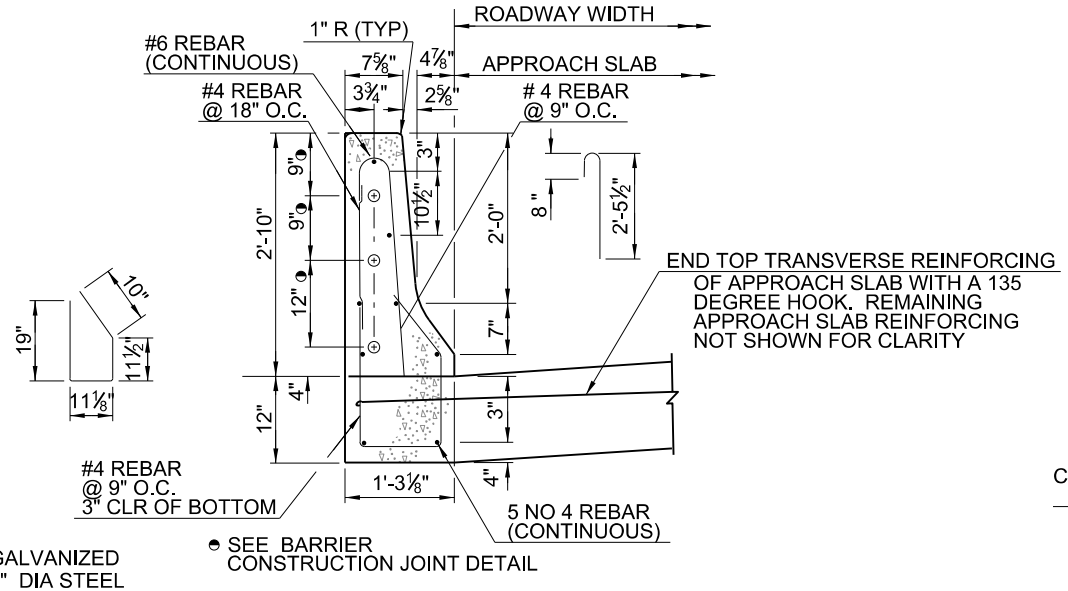

SECTION A-A

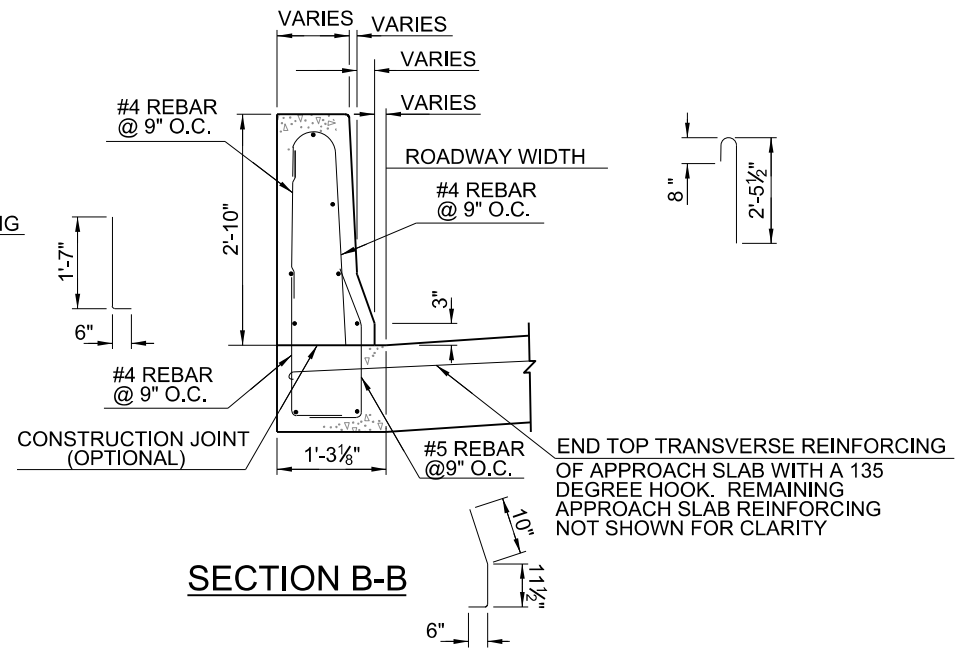

SECTION B-B

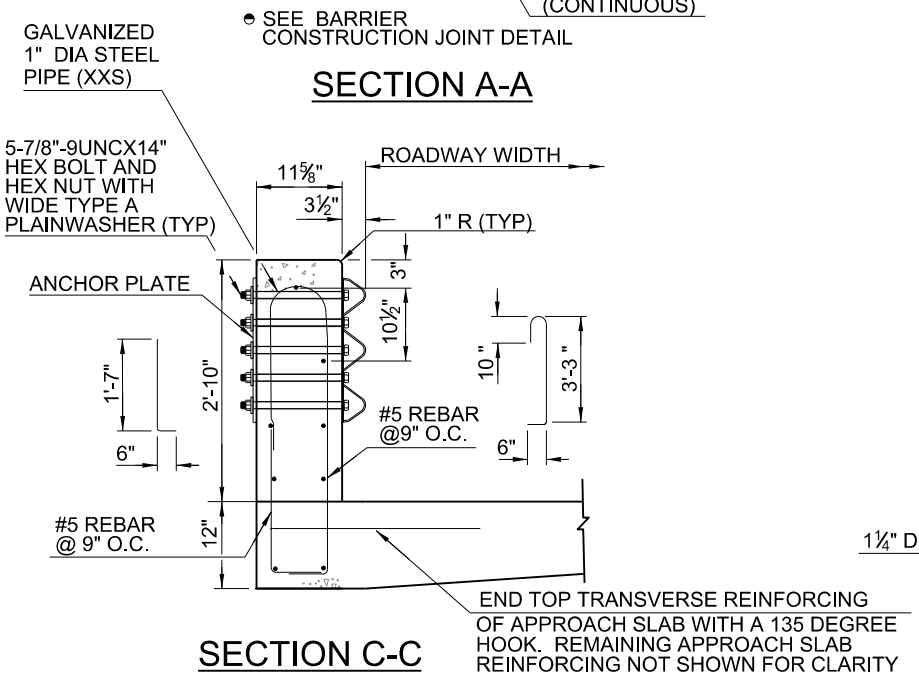

SECTION C-C

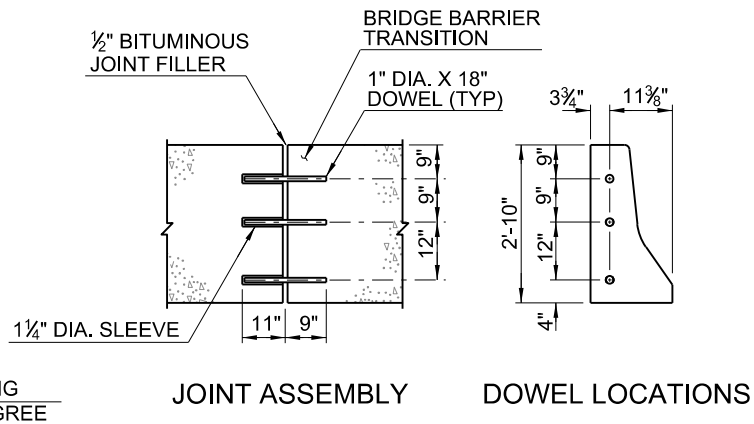

BARRIER CONSTRUCTION JOINT DETAIL

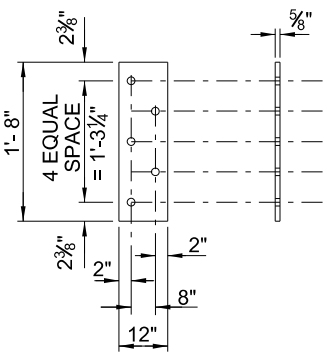

ANCHOR PLATE

MARICOPA COUNTY DEPARTMENT OF TRANSPORTATION	BARRIER DETAILS	DATE:	DETAIL NO.
STANDARD DETAIL		12/15/2015	2812-3

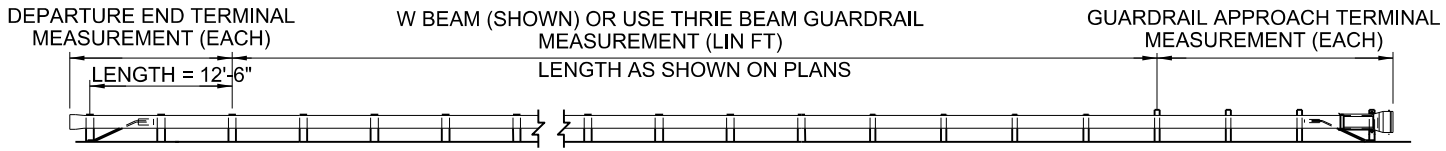

GENERAL NOTES

1. MEASUREMENT LENGTH SHALL BE AS SHOWN UNLESS OTHERWISE INDICATED ON PROJECT PLANS.
2. POST TYPE FOR TRANSITIONS SHALL MATCH POST TYPE OF ADJOINING GUARDRAIL.

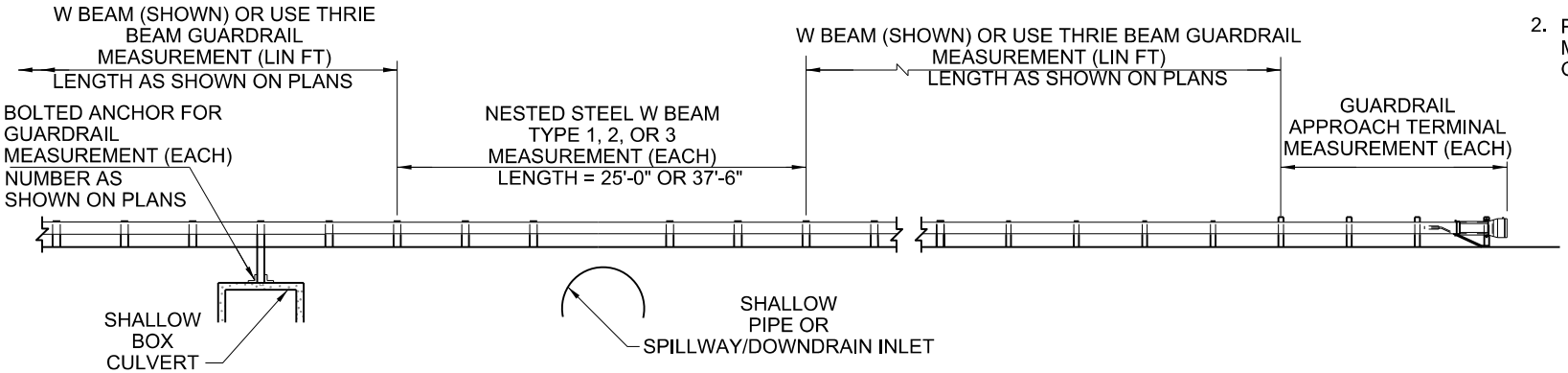

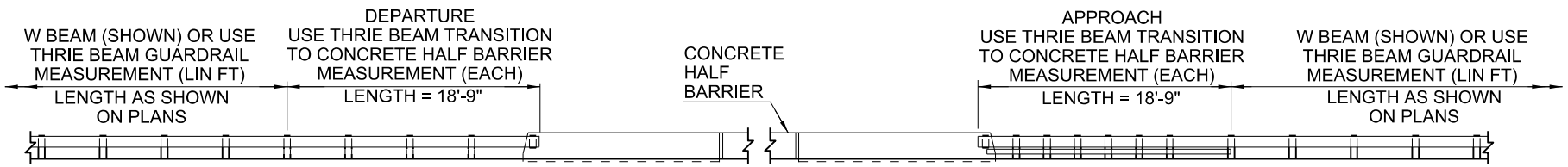

HALF BARRIER TRANSITIONS

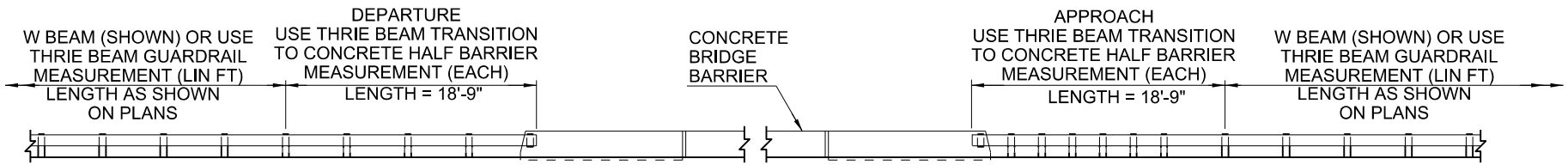

BRIDGE BARRIER TRANSITIONS

MARICOPA COUNTY DEPARTMENT OF TRANSPORTATION	28" HIGH STRONG POST W-BEAM GUARDRAIL MEASUREMENT	DATE:	DETAIL NO.
STANDARD DETAIL		08/21/2017	2816

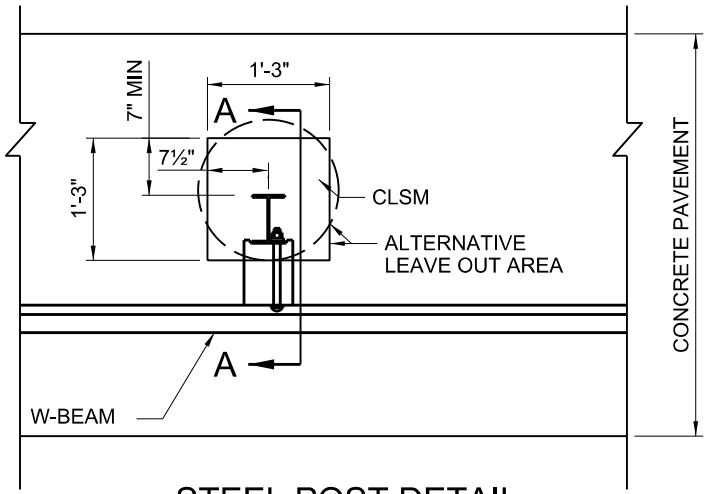

STEEL POST DETAIL

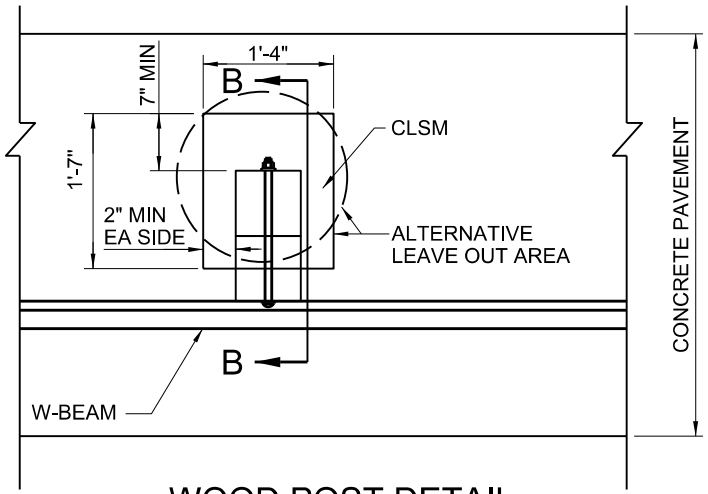

WOOD POST DETAIL

NOTES:

THE CONCRETE LEAVE OUT AREA FOR CLSM MAY BE RECTANGULAR OR CIRCULAR IN SHAPE. THE RECTANGULAR AREA IS AS DIMENSIONED.

FOR STEEL POSTS THE CIRCULAR LEAVE OUT AREA SHALL HAVE A RADIUS OF EIGHT INCHES (8") LOCATED 16¾" BACK OF THE RAIL FACE AND CENTERED ON THE POST.

FOR WOOD POSTS WITH AN 8" BLOCK OUT THE CIRCULAR LEAVE OUT AREA SHALL HAVE A RADIUS OF NINE INCHES (9") LOCATED 19¼" BACK OF THE RAIL FACE AND CENTERED ON THE POST. FOR WOOD POSTS WITH A 12" BLOCK OUT THE CIRCULAR LEAVE OUT AREA SHALL HAVE A RADIUS OF NINE INCHES (9") LOCATED 23¼" BACK OF THE RAIL FACE AND CENTERED ON THE POST.

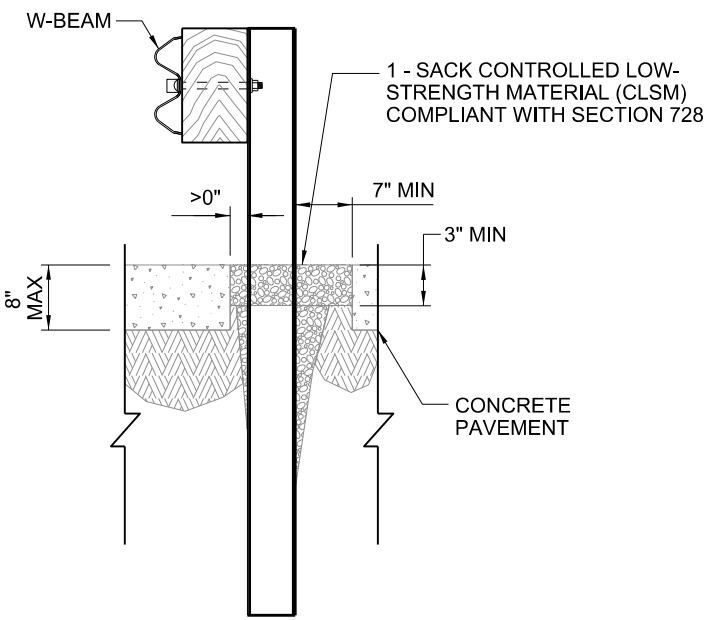

SECTION A-A

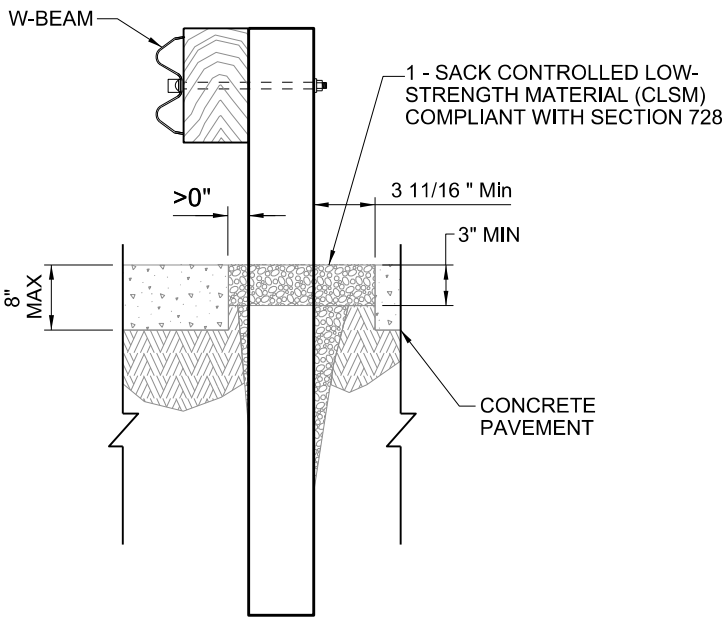

SECTION B-B

MARICOPA COUNTY DEPARTMENT OF TRANSPORTATION	GUARDRAIL POST INSTALLATION FOR CONCRETE PAVED AREAS	DATE:	DETAIL NO.
STANDARD DETAIL		11/14	3004

GENERAL NOTES

1. THE TYPE OF POST (RECTANGULAR WOOD POST OR STEEL POST) WILL BE AS INDICATED IN THE CONSTRUCTION DOCUMENTS.

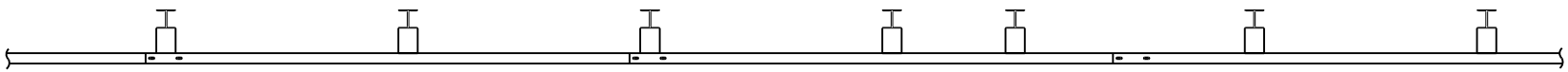

DIRECTION OF TRAFFIC

PLAN

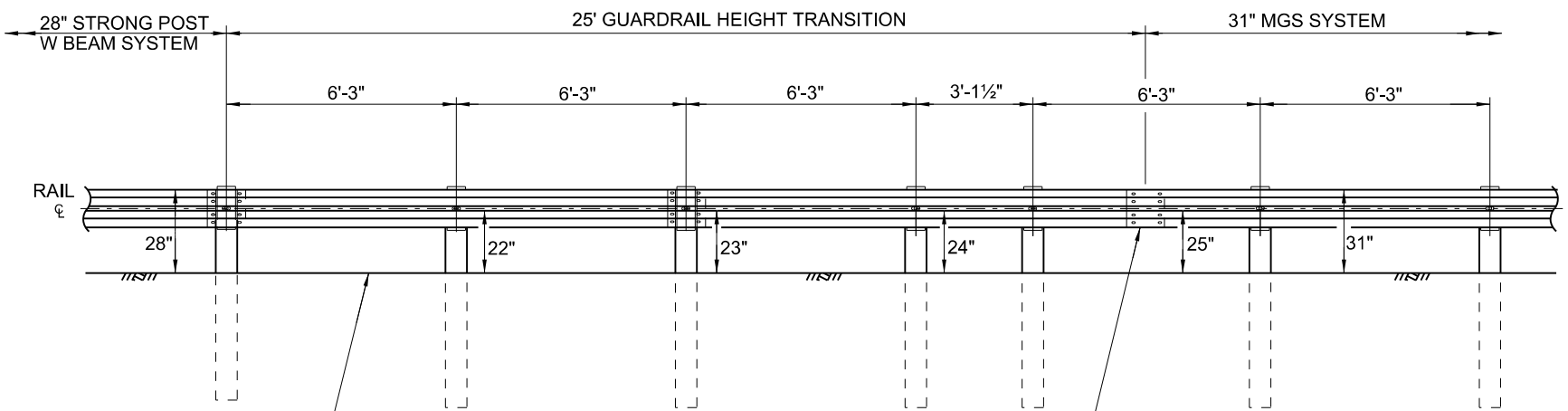

ELEVATION

MARICOPA COUNTY DEPARTMENT OF TRANSPORTATION	GUARDRAIL TRANSITION 31" TO 28"	DATE:	DETAIL NO.
STANDARD DETAIL		12/15/2015	3009

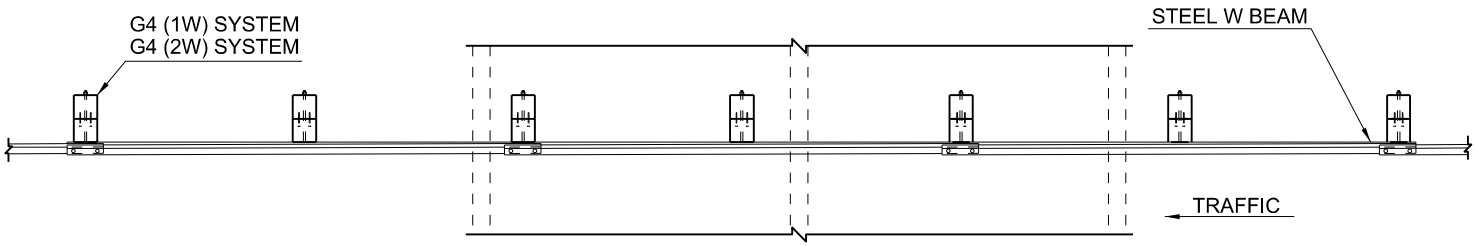

PLAN

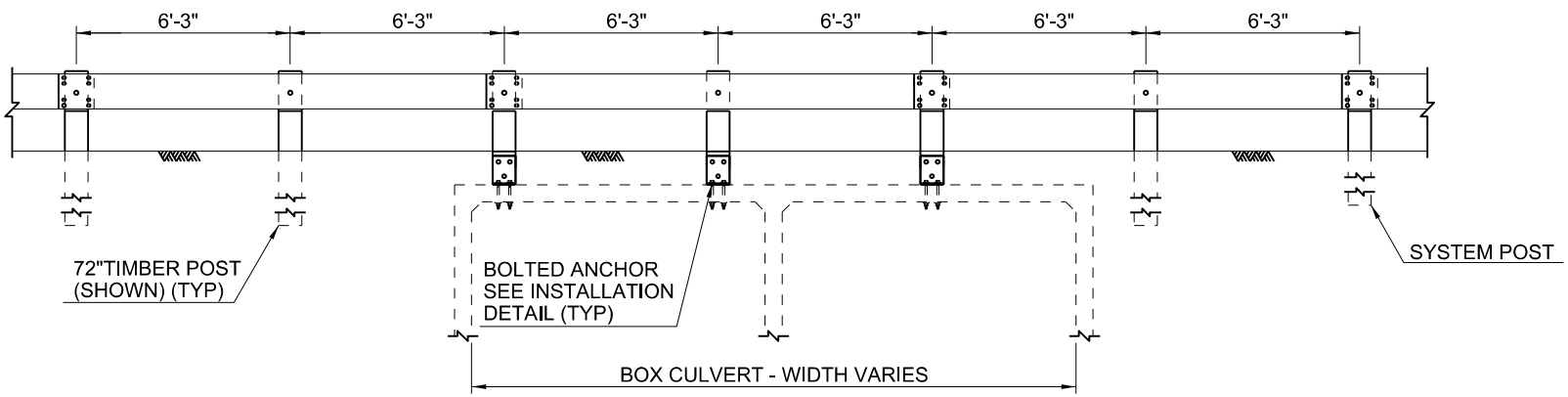

ELEVATION

BOLTED ANCHOR
BOX CULVERT INSTALLATION

MARICOPA COUNTY DEPARTMENT OF TRANSPORTATION	BOLTED GUARDRAIL ANCHORS	DATE:	DETAIL NO.
STANDARD DETAIL		11/19/09	3010-1

GENERAL NOTES

1. DRILL THROUGH TOP OF BOX CULVERT WITH ROTARY DRILL.
2. BRACKET MAY BE MADE OF ONE PIECE HOT BENT, OR TWO PIECES WELDED TOGETHER.
3. SHORT TIMBER POSTS ANCHORED TO BOX CULVERT ROOF SHALL BE 8" X 8" ONLY.

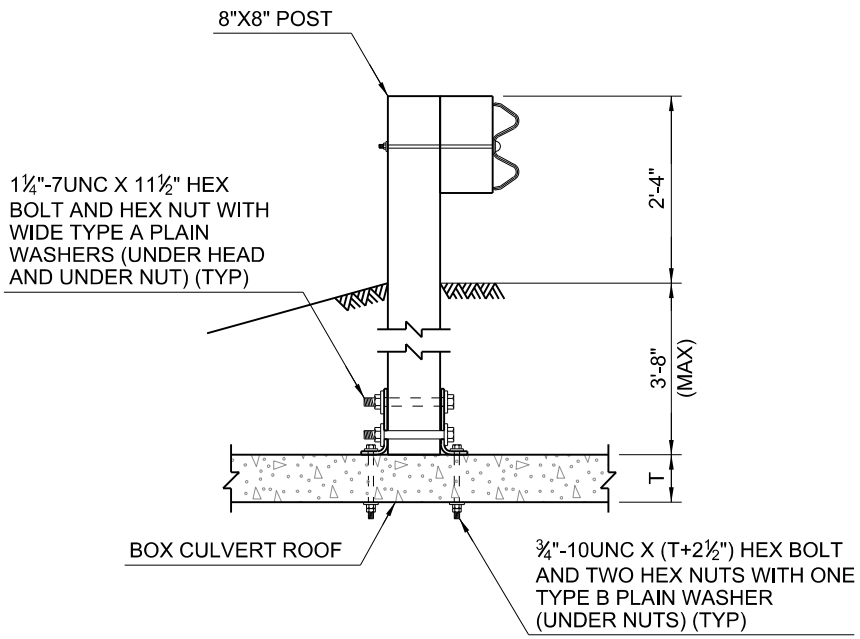

INSTALLATION DETAIL

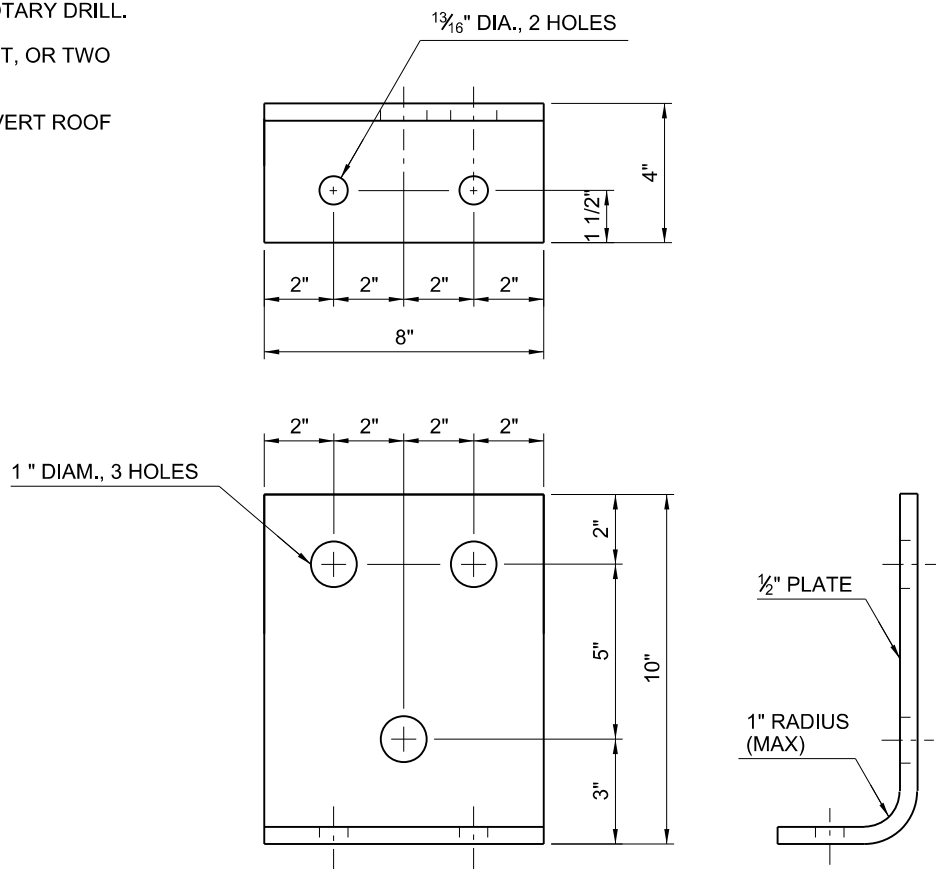

BRACKET DETAIL

BOLTED ANCHOR
TIMBER POST INSTALLATION DETAIL

MARICOPA COUNTY DEPARTMENT OF TRANSPORTATION	BOLTED GUARDRAIL ANCHORS	DATE:	DETAIL NO.
STANDARD DETAIL		11/19/09	3010-2

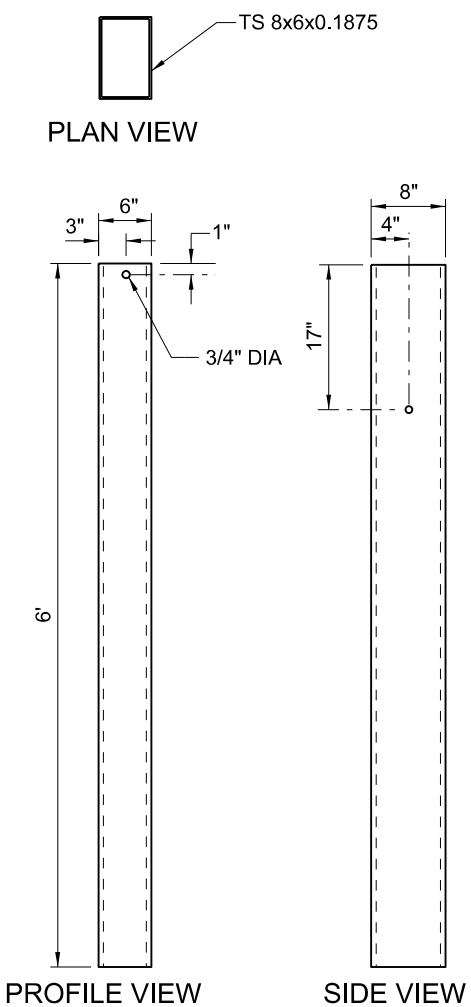

FOUNDATION TUBE

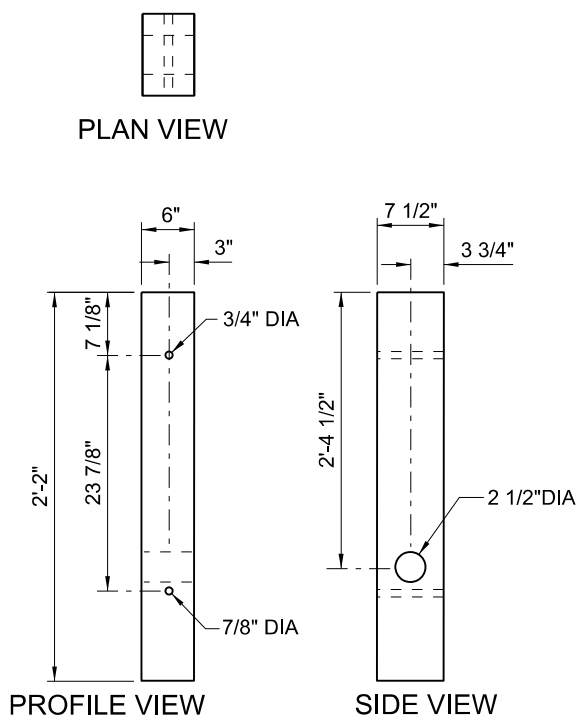

BCT WOOD POST

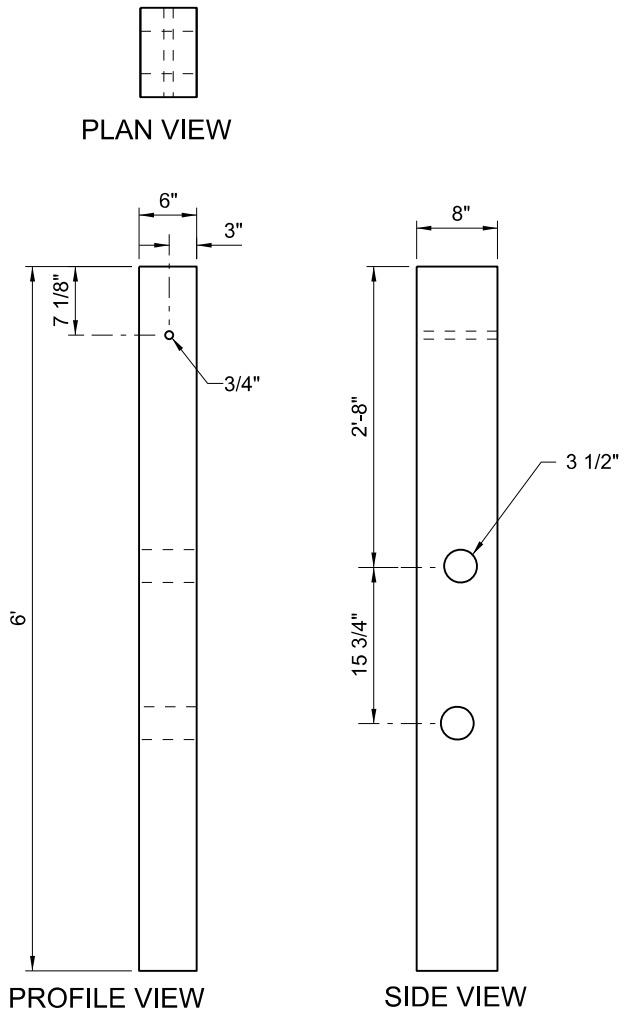

CRT WOOD POST

MARICOPA COUNTY DEPARTMENT OF TRANSPORTATION	WOOD BCT & CRT POSTS FOUNDATION TUBE	DATE:	DETAIL NO.
STANDARD DETAIL		09/01/2015	3100

GENERAL NOTES

1. THE CONTROL HEIGHT FOR GUARDRAIL SYSTEM IS 31" TO THE TOP OF RAIL, MEASURED AT THE FACE OF RAIL FROM THE NORMAL FINISHED PAVEMENT OR GROUND SURFACE ELEVATION.
2. GUARDRAIL SHALL BE LAPPED IN THE DIRECTION OF ADJACENT TRAFFIC.

● INDICATES AASHTO, AGC & ARTBA TASK FORCE 13 REPORT DESIGNATION

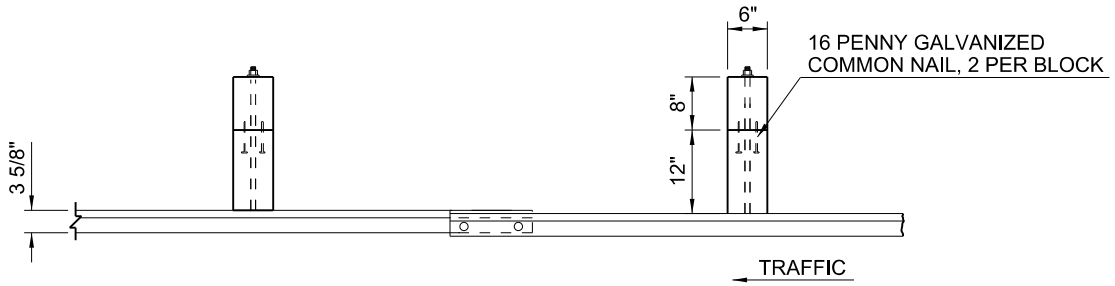

PLAN

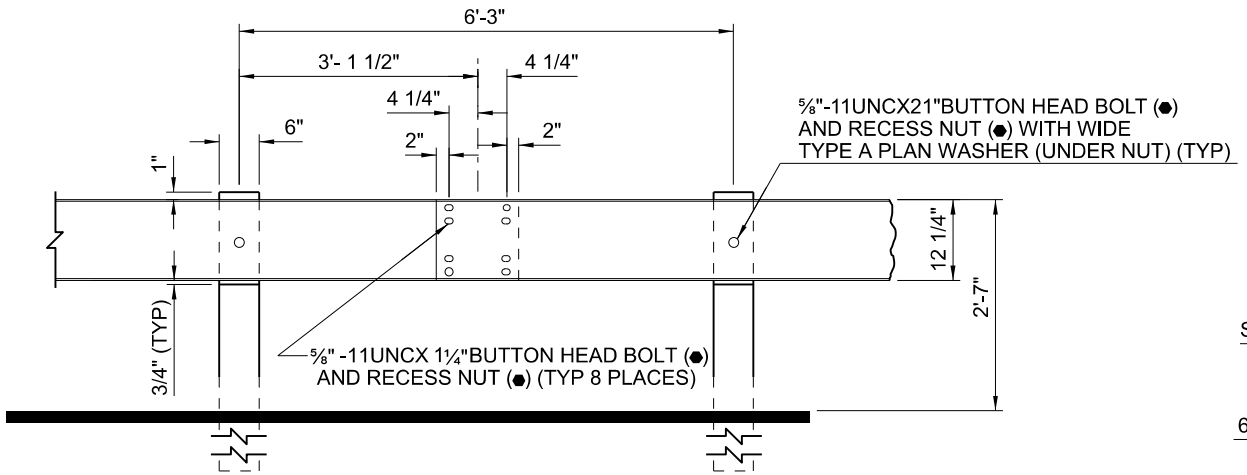

ELEVATION

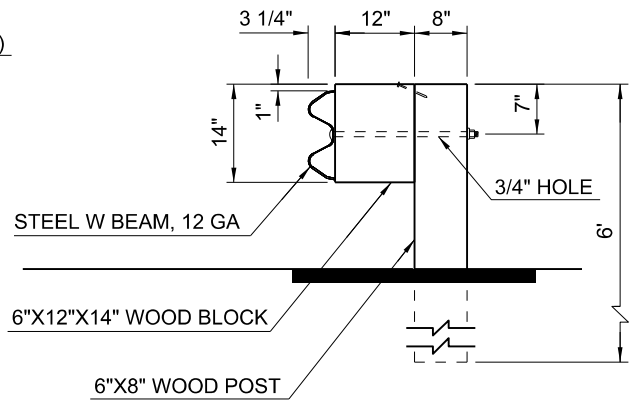

MARICOPA COUNTY DEPARTMENT OF TRANSPORTATION	MIDWEST GUARDRAIL SYSTEM (MGS) BLOCKED OUT TIMBER POST	DATE:	DETAIL NO.
STANDARD DETAIL		12/31/2017	3101

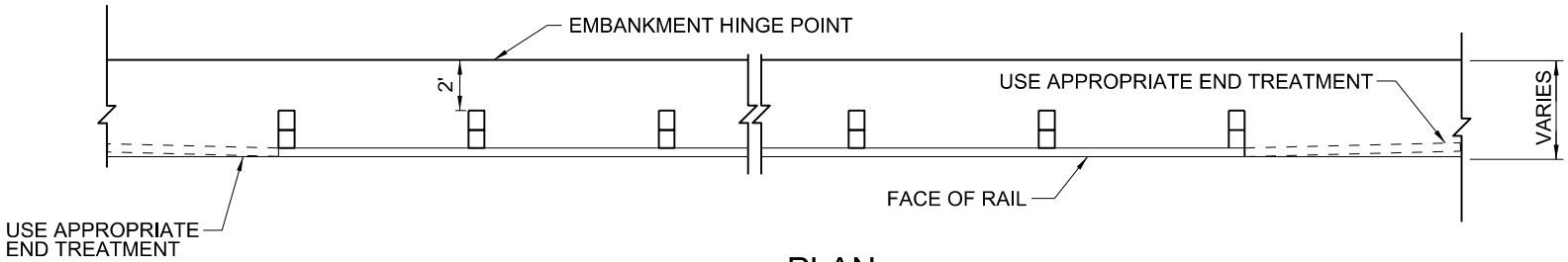

PLAN

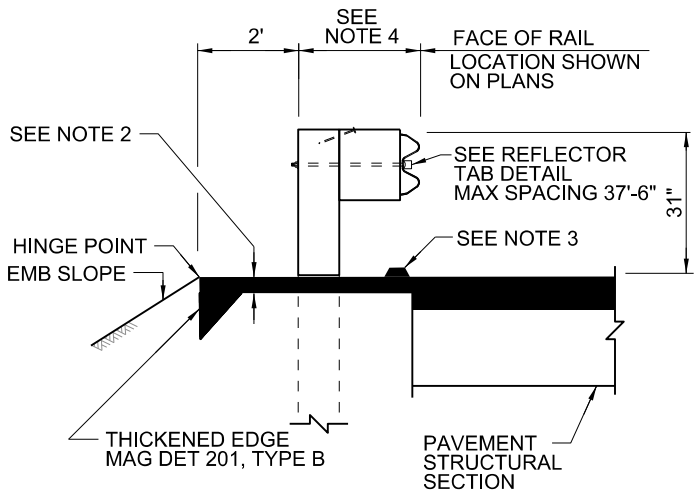

WITHOUT CURB

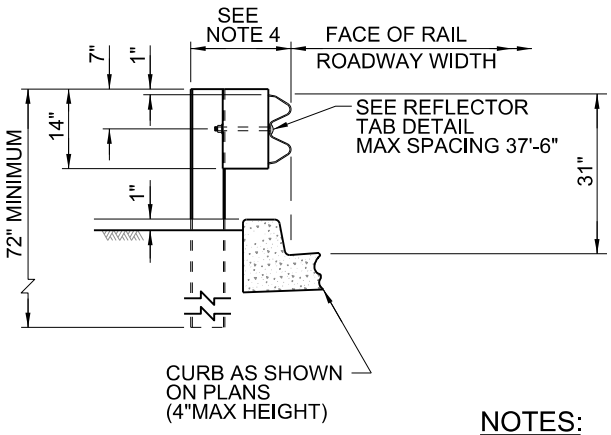

WITH CURB & GUTTER

SECTION

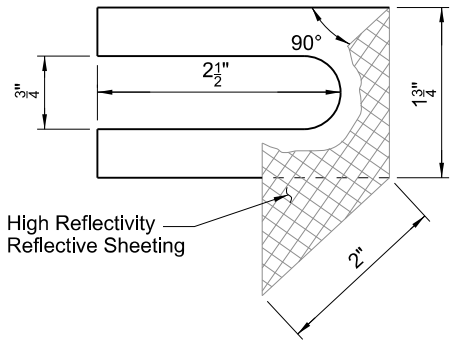

REFLECTOR TAB ISOMETRIC DETAIL

NOTES:

1. THE CONTROL HEIGHT FOR GUARDRAIL SYSTEM IS 31" TO THE TOP OF RAIL, MEASURED AT THE FACE OF RAIL FROM THE NORMAL FINISHED PAVEMENT OR GROUND SURFACE ELEVATION.
2. ASPHALT THICKNESS BEHIND FACE OF RAIL SHALL BE AT LEAST 1½ INCHES AND NO GREATER THAN 2½ INCHES FOR INSTALLATIONS WITHOUT CURB.
3. INSTALL EMBANKMENT CURB (MAG DETAIL550) PER PLANS.
4. WIDTH OF GUARDRAIL INSTALLATION IS DEPENDENT ON POST TYPE. FOR WOOD POST (SEE DETAIL 3101) THE APPROXIMATE DIMENSION IS 23¼". FOR STEEL POST (SEE DETAIL 3103) THE APPROXIMATE DIMENSION IS 16¾".

MARICOPA COUNTY DEPARTMENT OF TRANSPORTATION	MIDWEST GUARDRAIL SYSTEM (MGS) GUARDRAIL INSTALLATION	DATE:	DETAIL NO.
STANDARD DETAIL		10/11/2018	3102

GENERAL NOTES

1. THE CONTROL HEIGHT FOR GUARDRAIL SYSTEM IS 31" TO THE TOP OF RAIL, MEASURED AT THE FACE OF RAIL FROM THE NORMAL FINISHED PAVEMENT OR GROUND SURFACE ELEVATION.
2. GUARDRAIL SHALL BE LAPPED IN THE DIRECTION OF ADJACENT TRAFFIC.
   - ● INDICATES AASHTO, AGC & ARTBA TASK FORCE 13 REPORT DESIGNATION
3. * MAY SUBSTITUTE COMPOSITE BLOCK AS APPPROVED BY THE ENGINEER.

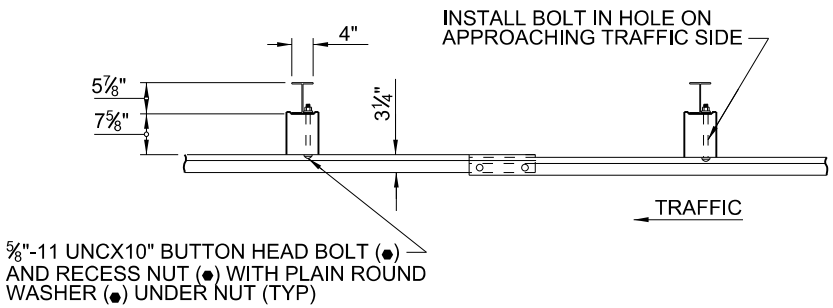

PLAN

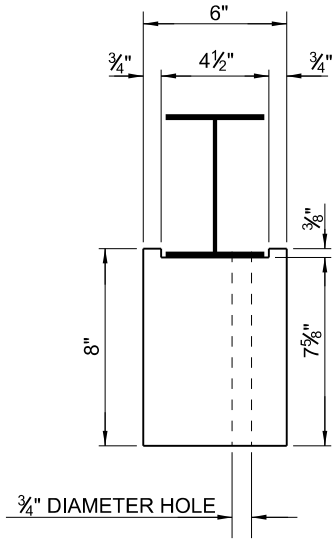

TOP VIEW

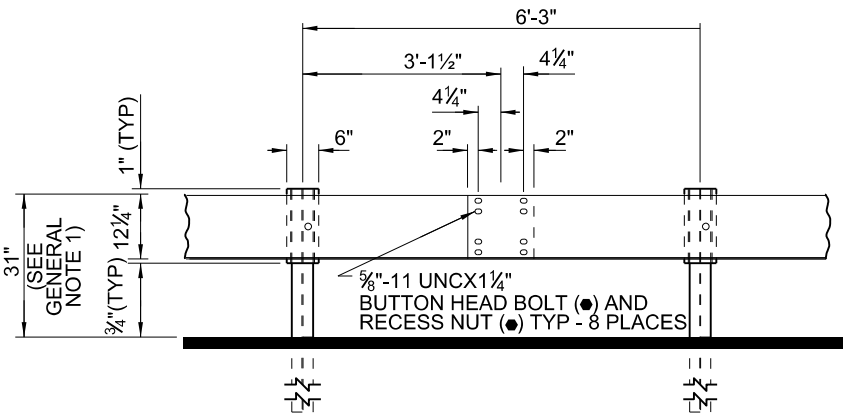

ELEVATION

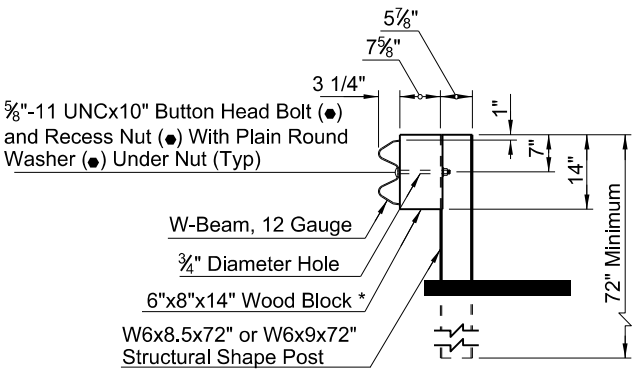

SECTION WITHOUT CURB

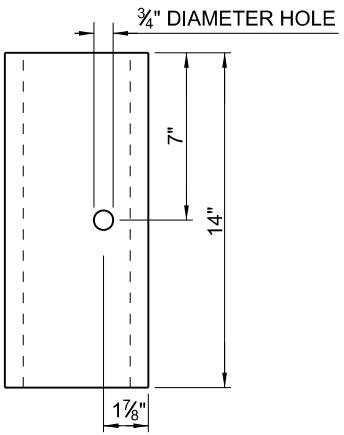

FRONT VIEW

WOOD BLOCK DETAIL

MARICOPA COUNTY DEPARTMENT OF TRANSPORTATION	MIDWEST GUARDRAIL SYSTEM BLOCKED OUT STEEL POST	DATE:	DETAIL NO.
STANDARD DETAIL		01/01/2020	3103

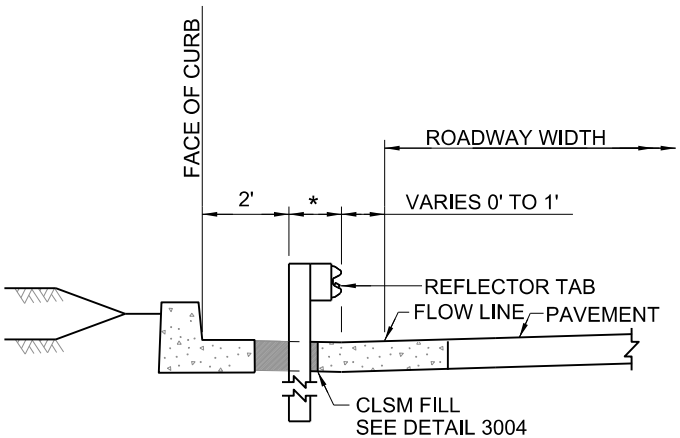

SECTION A-A

* WIDTH VARIES WITH POST TYPE

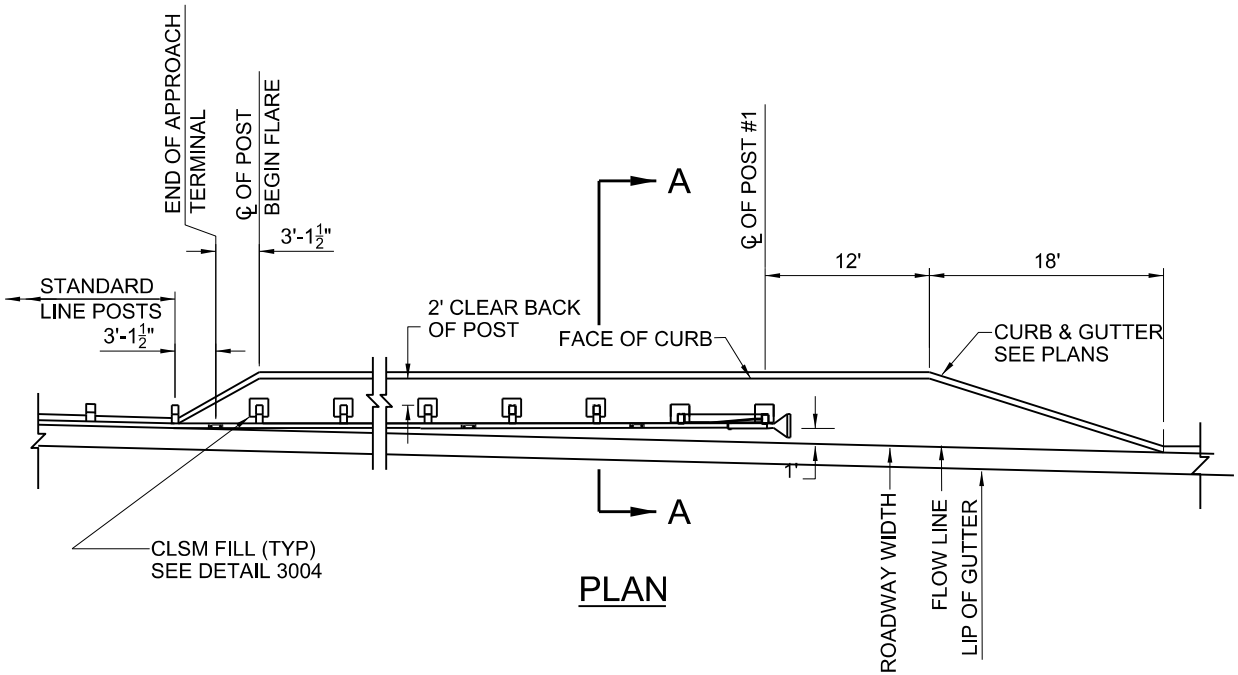

PLAN

GENERAL NOTES:

1. THE LOCATION OF W-BEAM RAIL SPLICES MAY VARY FROM POSITIONS SHOWN. RAIL SPLICE LOCATIONS ARE DEPENDENT ON THE END TERMINAL BEING INSTALLED.
2. TANGENTIAL APPROACH TERMINALS ON CURBED ROADWAYS SHALL BE FLARED.
3. FLARED TANGENTIAL TERMINALS SHALL BE INSTALLED AS A STRAIGHT TAPER BETWEEN THE FIRST AND LAST TERMINAL POSTS WITH A ONE FOOT (1') OFFSET AT THE IMPACT HEAD.

MARICOPA COUNTY DEPARTMENT OF TRANSPORTATION	MGS TANGENTIAL TERMINAL LAYOUT WITH CURB & GUTTER	DATE:	DETAIL NO.
STANDARD DETAIL		07/27/2015	3105

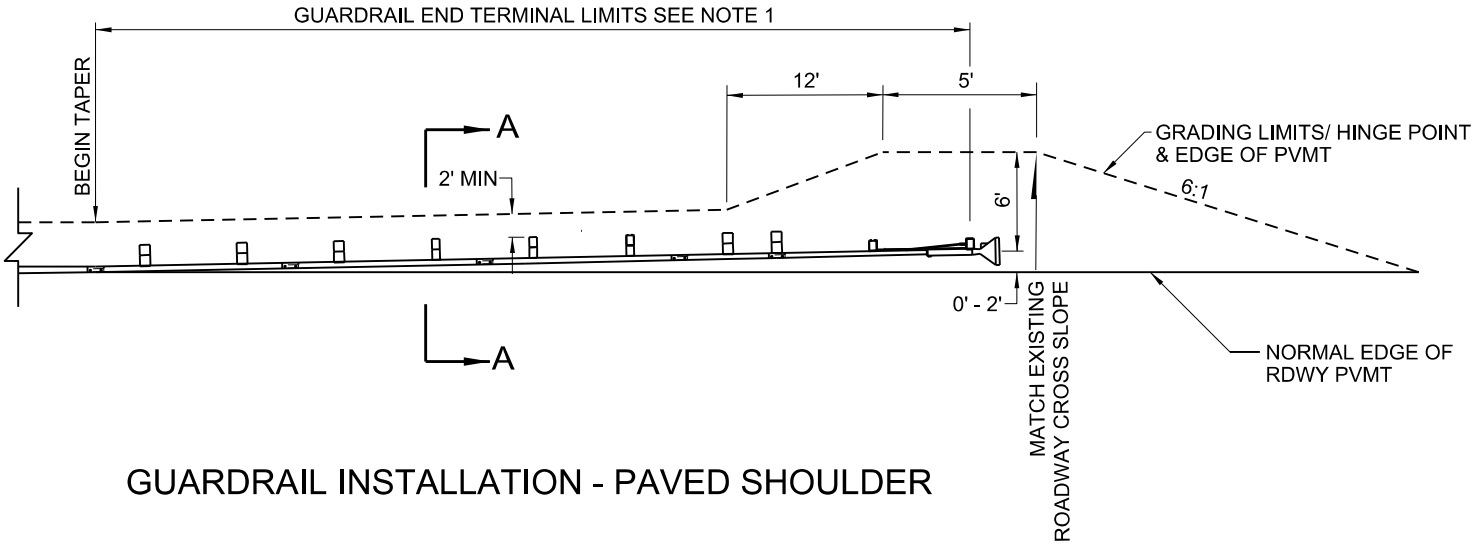

GUARDRAIL INSTALLATION - PAVED SHOULDER

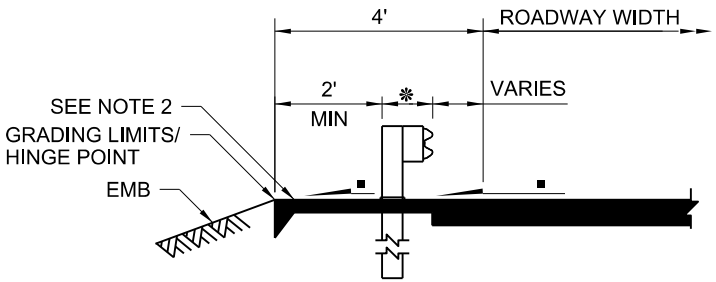

SECTION A-A

❋ WIDTH VARIES WITH POST TYPE

▪ MATCH EXISTING ROADWAY CROSS SLOPE

NOTES:

1. SEE DETAIL 3107 FOR MASH COMPLIANT END TERMINAL LAYOUT.
2. AC THICKNESS BEHIND FACE OF RAIL SHALL BE 2 INCHES FOR INSTALLATIONS WITHOUT CURB.

MARICOPA COUNTY DEPARTMENT OF TRANSPORTATION	MGS TANGENT W-BEAM TERMINAL LAYOUT WITHOUT CURB AND GUTTER	DATE:	DETAIL NO.
STANDARD DETAIL		10/11/2018	3106

GUARDRAIL END TERMINAL LAYOUT TABLE				
TEST LEVEL	END TERMINAL TYPE	(A)	(B)	MIN LENGTH
TL3	MAX TENSION	46'-8 ¼"	14'-8 ¼"	61'-4 ½"
	MSKT	46'-10 ½"	15'-2"	62'- ½"
	SOFT STOP	46'-10 ½"	16'-5"	63'-3 ½"
TL2	MSKT	12'-6"	12'-6"	25'-0"
	SOFT STOP	21'-10 ½"	16'-5"	38'-3 ½"

(A) STANDARD GUARDRAIL MEASUREMENT LIMIT TO LENGTH OF NEED POINT

(B) LENGTH OF NEED POINT TO FACE OF IMPACT HEAD

GENERAL NOTES

1. THE COMPONENTS FOR THE SELECTED MASH COMPLIANT TL3 & TL2 END TERMINAL TYPE SHALL BE INSTALLED IN ACCORDANCE WITH THE MANUFACTURER'S INSTALLATION SPECIFICATIONS AND CURRENT DRAWING.
2. GUARDRAIL END TERMINAL IMPACT HEAD SHALL BE DELINEATED WITH REFLECTORIZED OBJECT MARKER.
3. DETAILS SHOWN ARE FOR MSKT TERMINAL. DEPICTION OF OTHER TERMINALS WILL VARY.
4. REFER TO DETAIL 3106 FOR GRADING REQUIREMENTS.
5. REFER TO PLANS FOR STATION AND OFFSET FOR POINT OF LENGTH OF NEED.

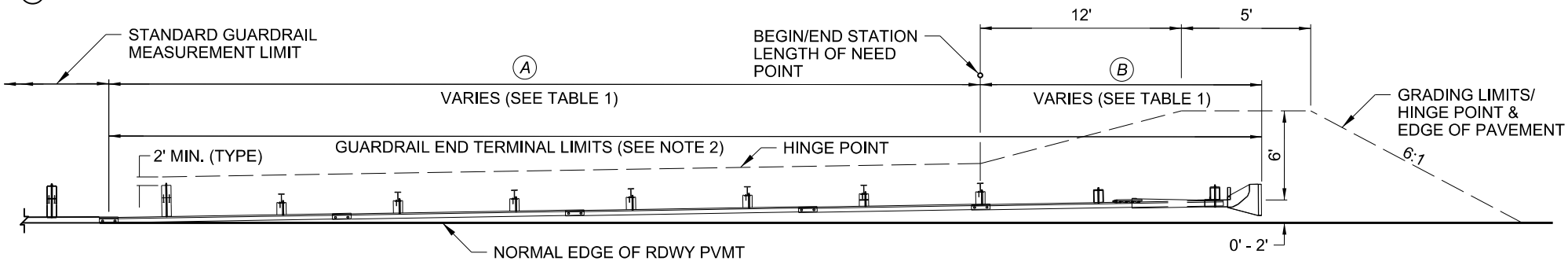

PLAN

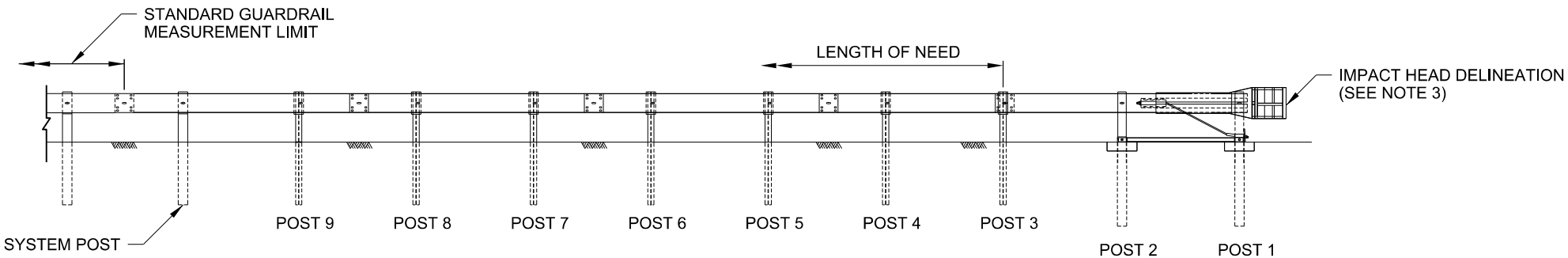

ELEVATION

MARICOPA COUNTY DEPARTMENT OF TRANSPORTATION	MGS GUARDRAIL - END TERMINAL LAYOUT	DATE:	DETAIL NO.
STANDARD DETAIL		10/11/2018	3107

PLAN

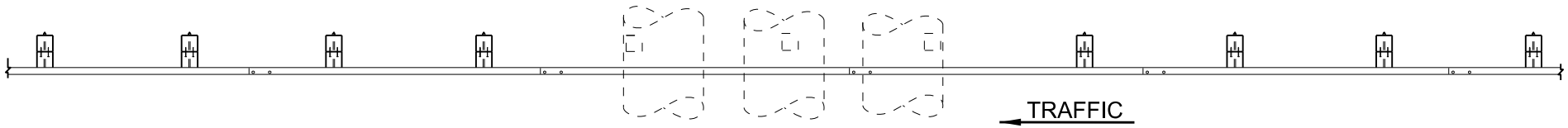

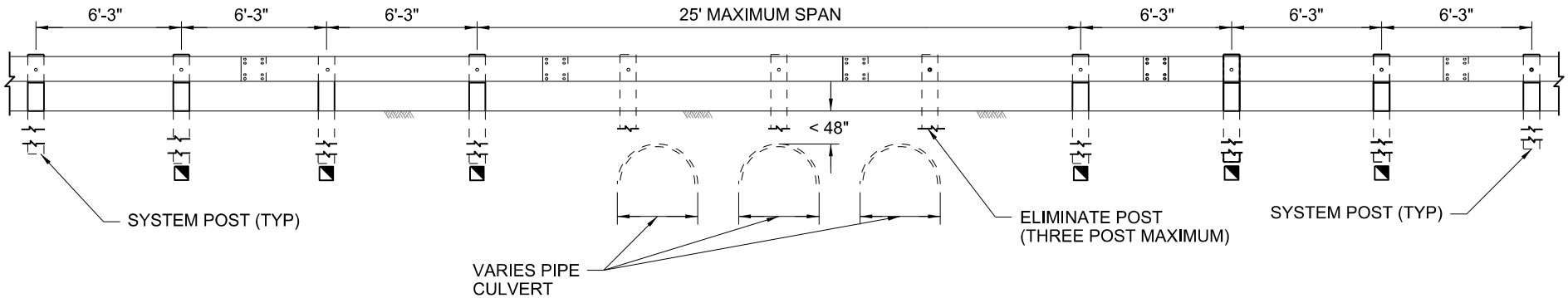

ELEVATION

GENERAL NOTES:

1. OMIT AS FEW POSTS AS NEEDED TO SPAN FEATURES WITH LESS THAN 48" OF COVER. A MAXIMUM OF 3 POSTS MAY BE OMITTED.
2. THREE CONTROLLED RELEASING TERMINAL (CRT) POSTS ARE REQUIRED ON EACH SIDE OF THE OMITTED POSTS. CRT POSTS ARE NOT REQUIRED IF ONLY ONE POST IS OMITTED.
3. UNLESS OTHERWISE SHOWN ON PLANS, INSTALL A MINIMUM OF 50' OF GUARDRAIL BEYOND THE FIRST CRT POST OR STANDARD POST ON EITHER SIDE OF THE MISSING POST(S); EXCLUSIVE OF TRANSITIONS, TAPERS, END ANCHORS, END TERMINALS, OR OTHER LONG-SPAN INSTALLATIONS.

SYMBOLS

- INDICATES W BEAM SPLICE CONNECTION.
- 72" CRT POST (SEE DETAIL 3100)

MARICOPA COUNTY DEPARTMENT OF TRANSPORTATION	MIDWEST GUARDRAIL SYSTEM (MGS) LONG-SPAN CULVERT APPLICATIONS	DATE:	DETAIL NO.
STANDARD DETAIL		01/01/2019	3108

GENERAL NOTES:

SHOWN FOR ONE-WAY TRAFFIC. FOR TWO-WAY TRAFFIC, DEPARTURE REQUIRES APPROACH END TREATMENT WHEN LOCATED WITHIN THE CLEAR ZONE OF OPPOSING TRAFFIC.

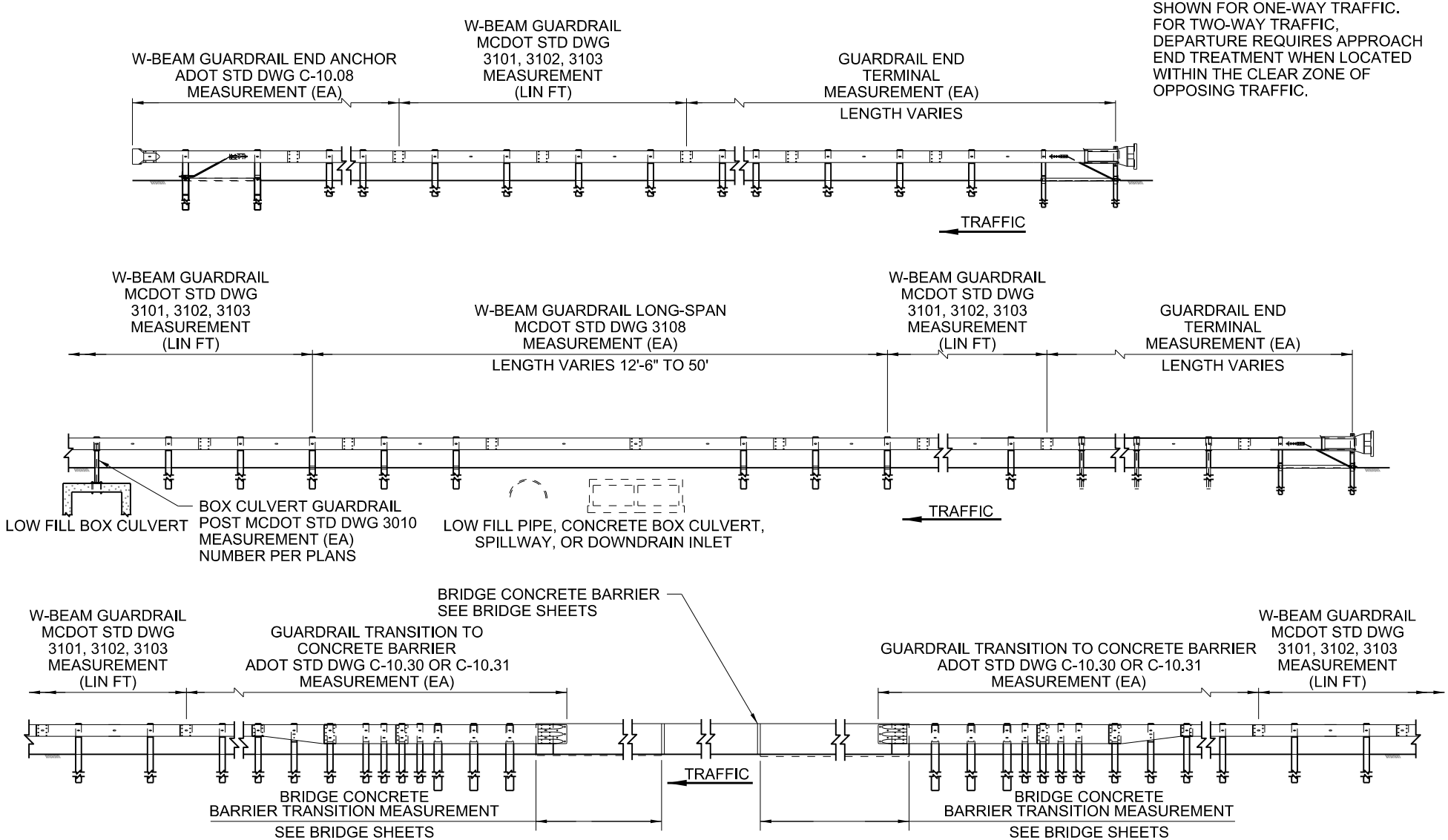

CONCRETE HALF-BARRIER TRANSITION ON STRUCTURE

MARICOPA COUNTY DEPARTMENT OF TRANSPORTATION	31" MIDWEST GUARDRAIL SYSTEM (MGS) GUARDRAIL MEASUREMENT	DATE:	DETAIL NO.
STANDARD DETAIL		01/01/2019	3116

SYMBOLS

SYMBOL	DESCRIPTION
◇	NO. 3½ PULL BOX
◇ 2	NO. 3½ PULL BOX NUMBER
□	NO 5 PULL BOX
⊠	NO. 5 PULL BOX W / EXTENTION
5	NO. 5 PULL BOX NUMBER
▭	NO 7 PULL BOX
⊠	NO. 7 PULL BOX W / EXTENTION
6	NO. 7 PULL BOX NUMBER
▬	ITS FIBER OPTIC PULL BOX
———	2", 2½", 3" OR 4" PVC CONDUIT RUN
———	LOOP DETECTOR LEAD
1	CONDUIT RUN NUMBER
⊙	POLE FOUNDATION
A	POLE FOUNDATION LETTER
SP / BBS	COMBINATION ELECTRICAL SERVICE PEDESTAL (SP) AND BATERRY BACK-UP (BBS) FOUNDATION LETTERS
●	TRAFFIC SIGNAL POLE
P	'P' CABINET FOUNDATION W/ CONCRETE PAD
◇	'G' CONTROL CABINET (EXISTING OR ITS ONLY)
	METER SOCKET W / CIRCUIT BREAKER BOX (EXISTING)
	COMBINATION ELECTRICAL SERVICE PEDESTAL (SP) AND BATERRY BACK-UP (BBS) FOUNDATION AND CABINET

SYMBOL	DESCRIPTION
	ELECTRICAL POINT OF SERVICE
OR	ADVANCE LOOP DETECTOR (SIZE AS INDICATED) (DIAGONAL OR CORNER POINTS ARE CORE DRILLED)
OR	PRESENCE/CALL LOOP DETECTOR (SIZE AS INDICATED) (DIAGONAL OR CORNER POINTS ARE CORE DRILLED)

MARICOPA COUNTY DEPARTMENT OF TRANSPORTATION	TRAFFIC SIGNAL SYMBOLS	DATE:	DETAIL NO.
STANDARD DETAIL		10/13	4701-1

SYMBOLS

SYMBOL	DESCRIPTION
	TYPE 'E' OR 'J' POLE W/ SIGNAL MAST ARM & TRAFFIC SIGNAL INDICATIONS 1-EACH AERIAL INDICATION FOR TYPE 'E' POLES 2-EACH AERIAL INDICATIONS FOR TYPE 'J' POLES
	TYPE 'F' OR 'Q' POLE W/ SIGNAL MAST ARM, LUMINAIRE MAST ARM & TRAFFIC SIGNAL INDICATIONS 1-EACH AERIAL INDICATION FOR TYPE 'F' POLES 2-EACH AERIAL INDICATIONS FOR TYPE 'Q' POLES
	TYPE 'K' POLE W/ SIGNAL MAST ARM & TRAFFIC SIGNAL INDICATIONS 3-EACH AERIAL INDICATION FOR TYPE 'K' POLES
	TYPE 'R' POLE W/ SIGNAL MAST ARM, LUMINAIRE MAST ARM & TRAFFIC SIGNAL INDICATIONS 3-EACH AERIAL INDICATION FOR TYPE 'R' POLES
	PEDESTRIAN SIGNAL INDICATION
	PEDESTRIAN PUSH BUTTON W/ SIGN MOUNTED ON SIGNAL POLE

SYMBOL	DESCRIPTION
	MCDOT LUMINAIRE ON MAST ARM
	LUMINAIRE ON MAST ARM (BY OTHERS)
A	AERIAL CABLE
	PEDESTRIAN MOVEMENT
	VEHICLE MOVEMENT
	TRAFFIC SIGNAL INDICATION (TYPE 'F')
	TRAFFIC SIGNAL INDICATION W / DIRECTIONAL ARROWS (TYPE 'Q')
	TRAFFIC SIGNAL INDICATION W / DIRECTIONAL ARROWS (TYPE 'R')
	FLASHER SIGNAL INDICATION
	TYPE 'A' POLE W / SIGNAL INDICATION
	VIDEO DETECTION CAMERA OR CCTV CAMERA

MARICOPA COUNTY DEPARTMENT OF TRANSPORTATION	TRAFFIC SIGNAL SYMBOLS	DATE:	DETAIL NO.
STANDARD DETAIL		10/13	4701-2

PULL BOX TYPE	A	B	C	D	E	F	G	H	I	J	PLAN SYMBOL
# 3½	8¾"	14"	12½"	14 7/16"	18"	19¾"	12"	1⅝"	15⅜"	10"	◇
# 5	12½"	22"	17"	19⅝"	26"	29"	12"	2"	23⅛"	13¾"	□
# 7	16¼"	29⅜"	20¾"	23¼"	34"	36⅞"	12"	2"	30½"	17⅝"	▭

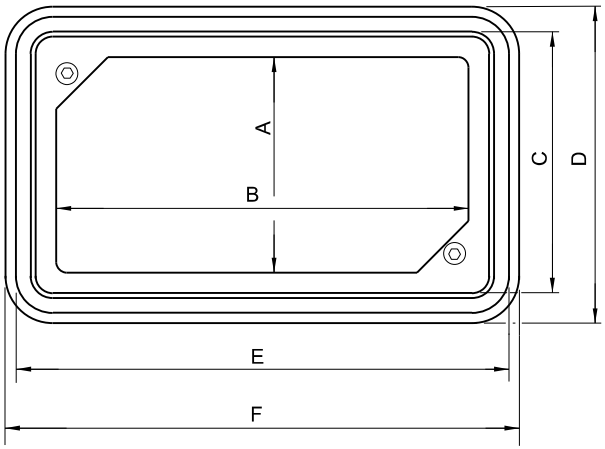

PULL BOX PLAN

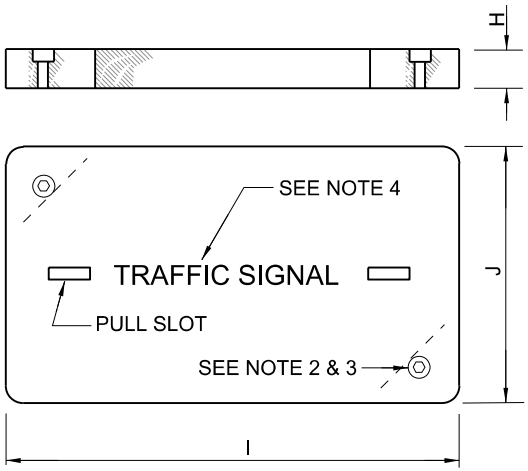

COVER

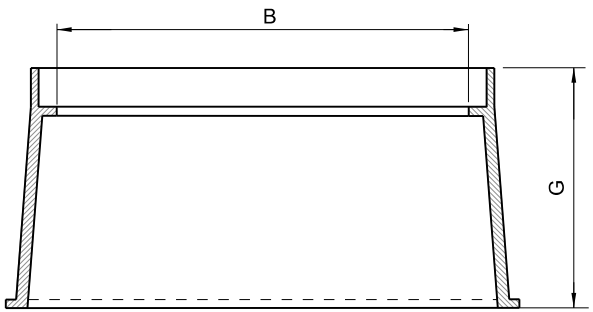

FRONT VIEW

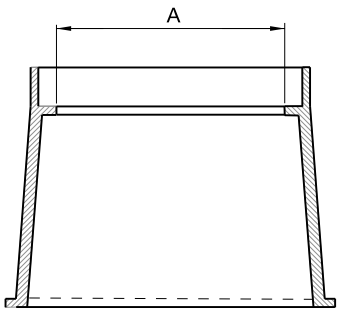

SIDE VIEW

NOTES:

1. PULL BOX SHALL BE CONSTRUCTED OF POLYMER CONCRETE REINFORCED WITH HEAVY-WEAVE FIBERGLASS. CHRISTY FIBERLYTE FL9 (#3 1/2 PULLBOX), FL30 (# 5 PULL BOX), FL36 (# 7 PULL BOX) OR APPROVED EQUAL. SEE MCDOT SUPPLEMENT SECTIONS 470 THRU 478.
2. COVERS SHALL BE SECURED WITH ⅜" BOLTS AND WASHERS WHICH SHALL BE OF BRASS, STAINLESS STEEL, OR OTHER CORROSION RESISTANT MATERIALS.
3. INSERTS IN BOX, FOR COVER BOLTS, SHALL BE OF BRASS, STAINLESS STEEL OR OTHER CORROSION RESISTANT MATERIALS.
4. THE WORDS 'TRAFFIC SIGNAL' SHALL BE CAST ON PULL BOX COVER IN 1" HIGH LETTERS.
5. FOR TYPICAL TRAFFIC SIGNAL PULL BOX INSTALLATION SEE MCDOT STANDARD DETAIL NO. 4713.
6. FOR PULL BOX EXTENSIONS SEE MCDOT STANDARD DETAIL NO. 4712.

MARICOPA COUNTY DEPARTMENT OF TRANSPORTATION	TRAFFIC SIGNAL PULL BOX DETAIL	DATE:	DETAIL NO.
STANDARD DETAIL		04/09	4711

PULL BOX TYPE	K	L	M	N	O	PLAN SYMBOL
#5	26¼"	16⅞"	29"	19⅝"	8"	☒
#7	33⅞"	21"	36⅞"	24¼"	8"	⊠

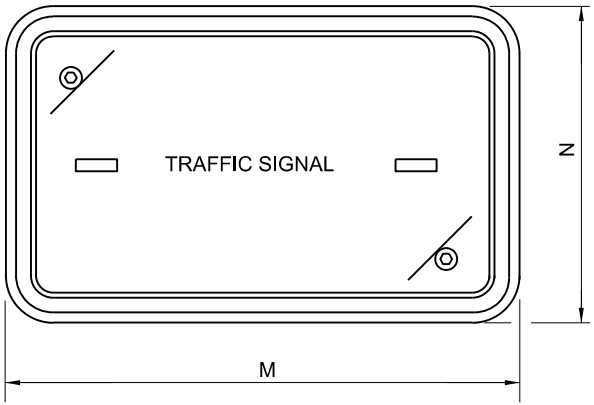

PULL BOX PLAN

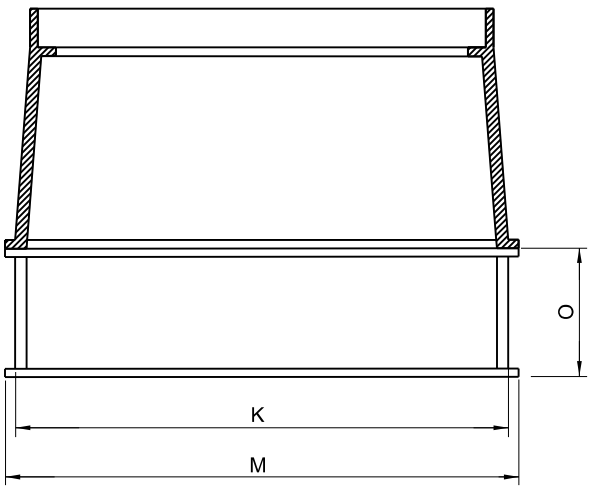

FRONT VIEW

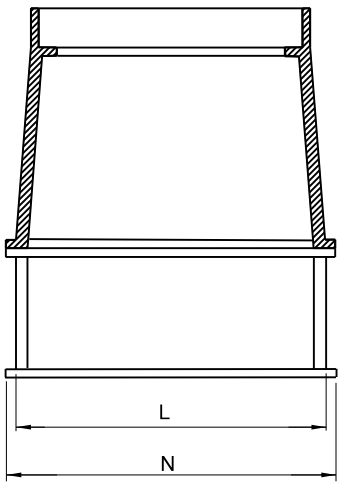

SIDE VIEW

NOTES:

1. FOR MATERIAL AND CONSTRUCTION SPECIFICATIONS, SEE MCDOT SUPPLEMENT SECTIONS 471 THRU 478,
2. PULL BOX SHALL BE CONSTRUCTED OF POLYMER CONCRETE REINFORCED WITH HEAVY-WEAVE FIBERGLASS. CHRISTY FIBERLYTE FL30 (#5 PULL BOX), FL36 (#7 PULL BOX) OR APPROVED EQUAL.

MARICOPA COUNTY DEPARTMENT OF TRANSPORTATION	TRAFFIC SIGNAL PULL BOX EXTENSION	DATE:	DETAIL NO.
STANDARD DETAIL		09/27/2013	4712

ITEM	QTY.	DESCRIPTION
1	1	PULL BOX (SEE STD. DWG. 4711)
2	1	PVC ELECTRICAL CONDUIT, SCH. 40
3	1	PVC CAP
4	1	5/8" x 8' LONG GROUNDING ELECTRODE
5	1	1" SHORT GRADE ROCK

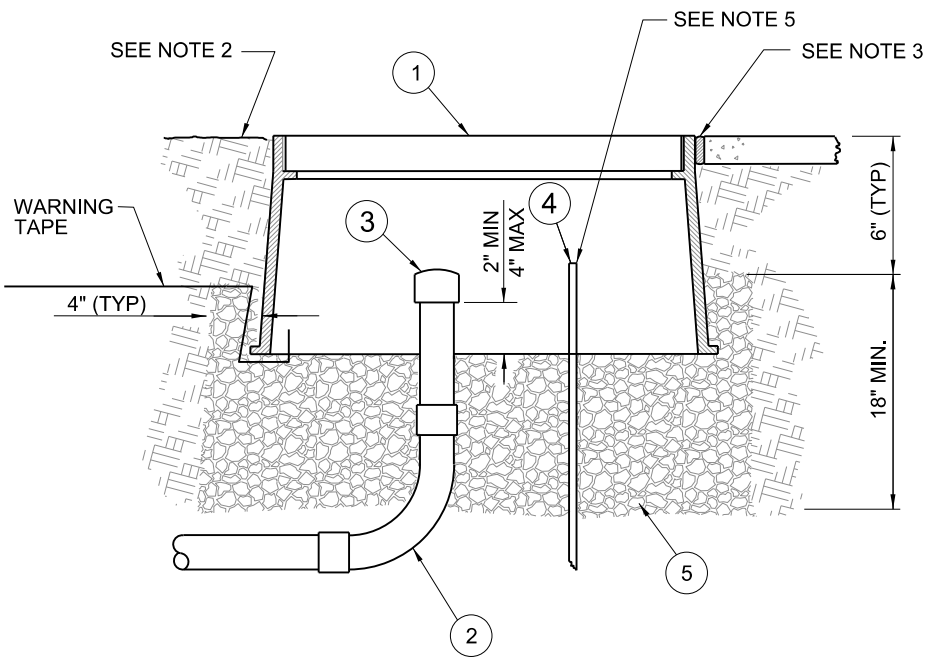

NOTES:

1. FOR MATERIAL AND CONSTRUCTION INSTALLATION SPECIFICATIONS SEE SECTION 471
2. BACKFILL WITH EXCAVATED MATERIAL AND COMPACT.
3. EXPANSION JOINT MATERIAL SHALL BE USED AROUND PULL BOX WHEN INSTALLED IN CONCRETE AREA.
4. WHEN INSTALLING PVC CONDUIT IT SHALL ENTER NEAR SIDES OF PULLBOX.
5. GROUNDING ELECTRODE.

MARICOPA COUNTY DEPARTMENT OF TRANSPORTATION	TYPICAL TRAFFIC SIGNAL PULL BOX INSTALLATION	DATE:	DETAIL NO.
STANDARD DETAIL		1/1/2011	4713

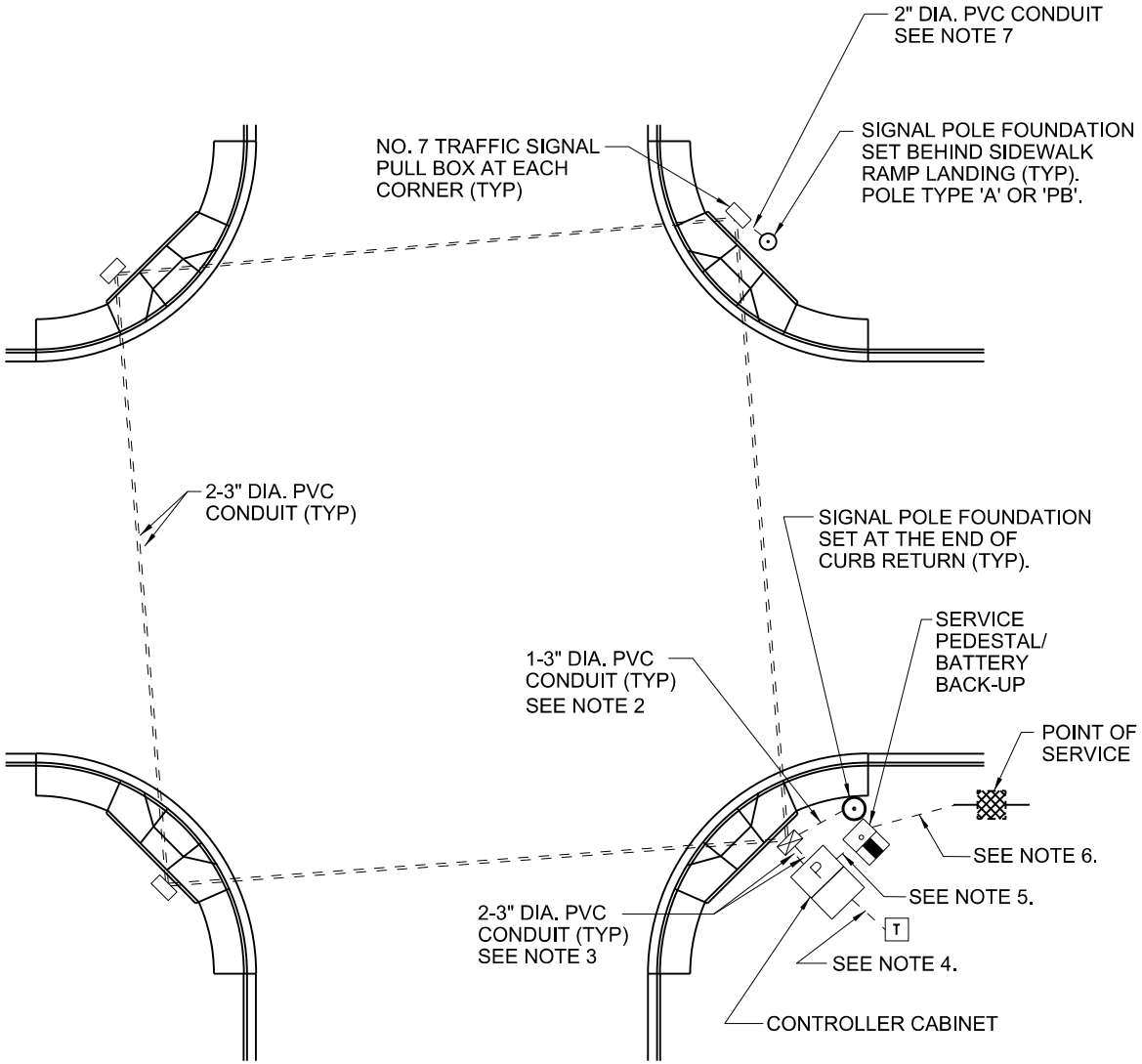

NOTES:

1. FOR MATERIAL AND SPECIFICATIONS SEE MCDOT SUPPLEMENT, SECTIONS 470 THRU 478
2. INSTALL 3" DIA. PVC CONDUIT BETWEEN TYPE "E", "F", "J", "Q", "K" or "R" POLE FOUNDATION LOCATIONS AND NO. 7 SIGNAL PULL BOXES. (TYP).
3. INSTALL 2-3" DIA. PVC CONDUIT BETWEEN CONTROL CABINET AND NO. 7 SIGNAL PULL BOX WITH EXTENTION.
4. INSTALL 3" DIA. PVC CONDUIT BETWEEN TELEPHONE SERVICE PEDESTAL AND CONTROLLER CABINET.
5. INSTALL 2" DIA. PVC CONDUIT BETWEEN SERVICE PEDESTAL/ BATTERY BACK-UP CABINET FOUNDATION AND CONTROLLER CABINET FOUNDATION. MINIMUM SPACING SHALL BE 10'.
6. INSTALL 2½" OR 3" DIA. PVC CONDUIT BETWEEN POINT OF SERVICE SERVICE PEDESTAL/BATTERY BACK-UP FOUNDATIONS REQUIRED BY THE ELECTRICAL SERVICE COMPANY.

MARICOPA COUNTY DEPARTMENT OF TRANSPORTATION	TYPICAL TRAFFIC SIGNAL PULL BOX AND CONDUIT RUN LAYOUT	DATE:	DETAIL NO.
STANDARD DETAIL		09/27/2013	4716

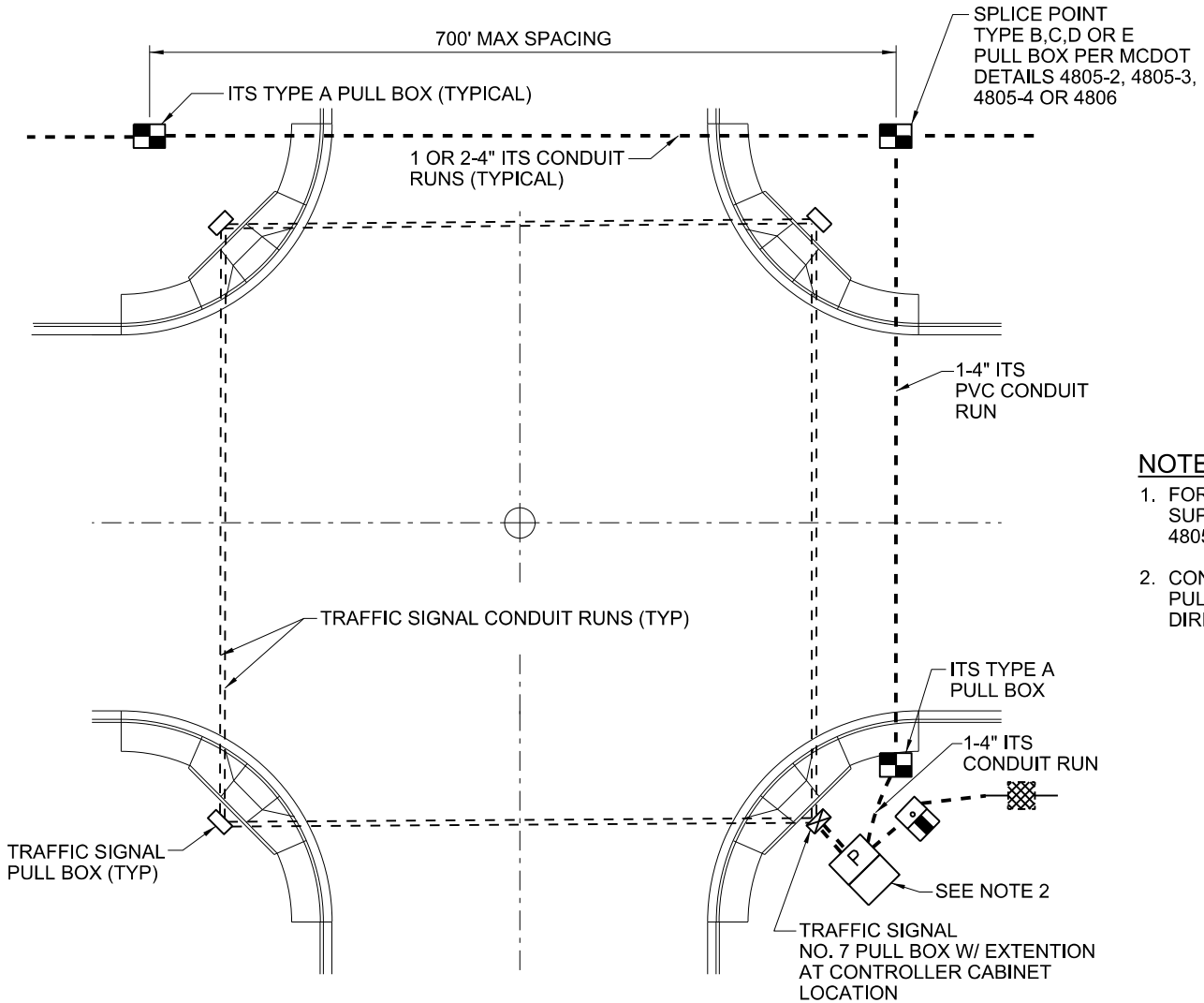

NOTES:

1. FOR ITS FIBER OPTIC CONDUIT AND PULL BOXES, SEE MCDOT SUPPLEMENT, SECTION 481 AND MCDOT DETAILS 4801, 4805-1, 4805-2, 4805-3, 4805-4 AND 4806.
2. CONTROLLER CABINET LOCATION MAY VARY. ADJUST ITS PULL BOX AND CONDUIT LAYOUT AS NEEDED TO PROVIDE A DIRECT PATH FROM SPLICE POINT TO CONTROLLER CABINET.

MARICOPA COUNTY DEPARTMENT OF TRANSPORTATION	ITS INTERCONNECT CONDUIT AND PULL BOX LAYOUT	DATE:	DETAIL NO.
STANDARD DETAIL		10/19/2013	4717

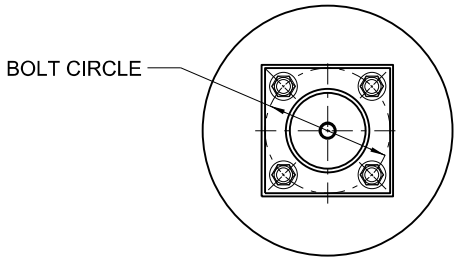

POLE TYPE	BOLT CIRCLE	ANCHOR BOLTS	BLOCK OUT AREA	DIM. A	DIM. B	DIM. C
A	11½"	1"x 48" x 4"	12" x 12" x 1"	5'	2'	4"
E	11½"	1¼"x 52" w/PLATE	12" x 12" x 1"	5'	3'	4"
F	11½"	1¼"x 52" w/PLATE	12" x 12" x 1"	5'	3'	4"
PB	10½"	¾"x 16"x4"	11" x 11" x 1"	2'	2'	2½"

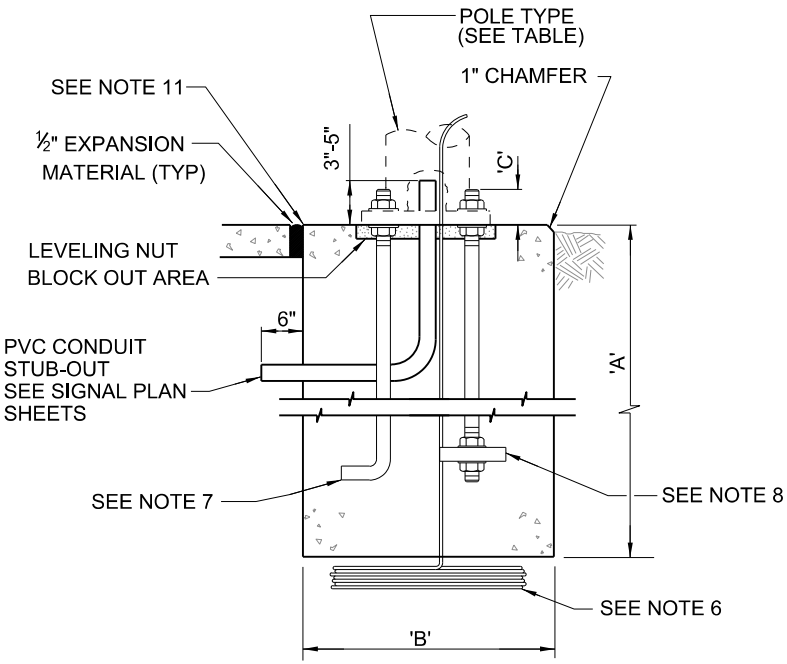

NOTES:

1. FOR MATERIAL AND CONSTRUCTION SPECIFICATIONS SEE SECTIONS 470 THRU 478.
2. UNLESS OTHERWISE SPECIFIED, SET ANCHOR BOLTS PARALLEL TO ROADWAY CENTERLINE.
3. ANCHOR BOLTS SHALL BE PLUMBED.
4. SECURE NUTS AND FLAT WASHERS WRENCH TIGHT ON ANCHOR BOLTS.
5. AFTER POLE IS SET AND PLUMBED, GROUT BLOCK OUT AREA.
6. INSTALL 25 FOOT COIL OF # 4 AWG BARE COPPER GROUNDING ELECTRODE AS SHOWN. EXTEND END OF GROUNDING ELECTRODE 2 FEET ABOVE TOP OF FOUNDATION.
7. FOR TYPE A POLE ANCHOR BOLTS SEE DETAIL 4725.
8. FOR TYPE 'E' & 'F' POLE ANCHOR BOLTS SEE DETAIL 4726.
9. INSTALL 3" DIA. PVC CONDUIT STUB-OUT FOR TYPE 'E' & 'F' POLES.
10. INSTALL 2" DIA. PVC CONDUIT STUB-OUT FOR TYPE 'A' & 'PB' POLES.
11. WHEN LOCATED WITHIN OR CONNECTING TO SIDEWALK, MATCH SIDEWALK ELEVATION & CONSTRUCT 1/4" EDGE RADIUS.

MARICOPA COUNTY DEPARTMENT OF TRANSPORTATION	SIGNAL POLE FOUNDATION	DATE:	DETAIL NO.
STANDARD DETAIL		09/08/2016	4720

POLE TYPE	BOLT CIRCLE	ANCHOR BOLTS	BLOCK OUT AREA	DIM. A	DIM. B	DIM. C
'J'	18"	2" x 70" w/PLATE	19 x 19 x 2"	10'	3'	5"
'Q'	18"	2" x 70" w/PLATE	19 x 19 x 2"	10'	3'	5"
'K'	18"	2" x 70" w/PLATE	19 x 19 x 2"	10'	3'	5"
'R'	18"	2" x 70" w/PLATE	19 x 19 x 2"	10'	3'	5"

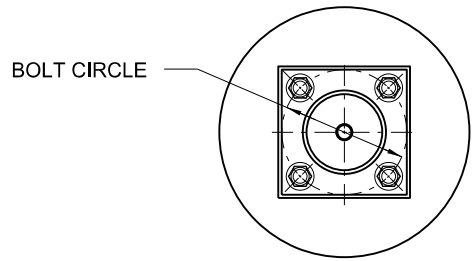

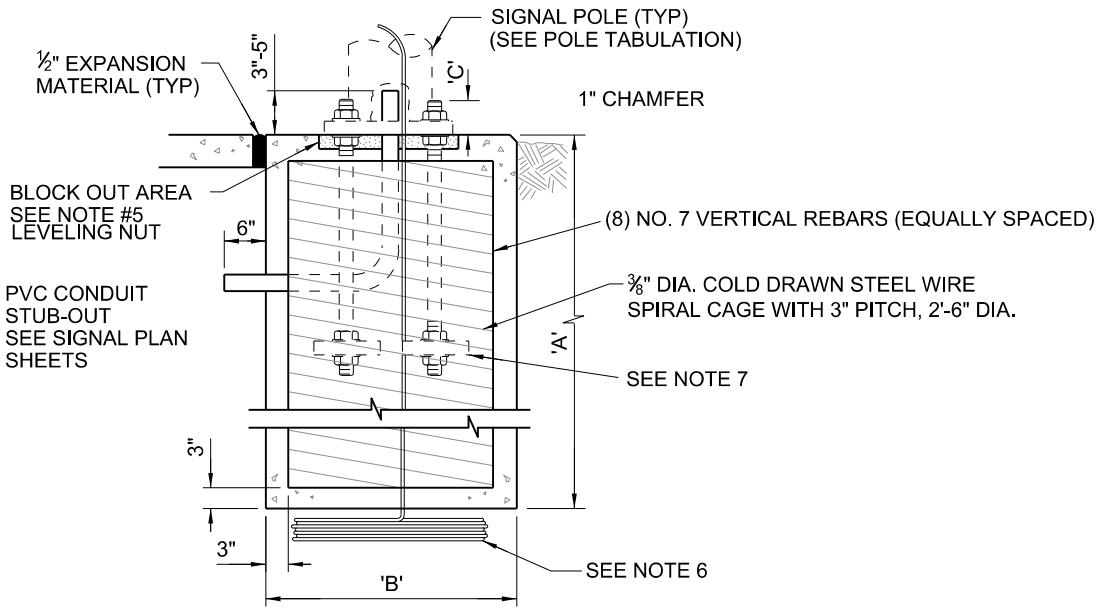

NOTES:

1. FOR MATERIAL AND CONSTRUCTION SPECIFICATIONS SEE MCDOT SUPPLEMENT, SECTION 472.
2. UNLESS OTHERWISE SPECIFIED, SET ANCHOR BOLTS PARALLEL TO ROADWAY CENTERLINE.
3. ANCHOR BOLTS AND REBAR CAGE SHALL BE PLUMBED.
4. SECURE NUTS AND FLAT WASHERS WRENCH TIGHT ON ANCHOR BOLTS.
5. AFTER POLE IS SET AND PLUMBED, GROUT BLOCK OUT AREA.
6. INSTALL 25 FOOT COIL OF # 4 AWG BARE COPPER GROUNDING ELECTRODE AS SHOWN. EXTEND END OF GROUNDING ELECTRODE 2 FEET ABOVE TOP OF FOUNDATION.
7. FOR ANCHOR BOLT INFORMATION SEE MCDOT DETAIL 4726.

MARICOPA COUNTY DEPARTMENT OF TRANSPORTATION	SINGLE POLE FOUNDATIONS	DATE:	DETAIL NO.
STANDARD DETAIL		11/01/2012	4721

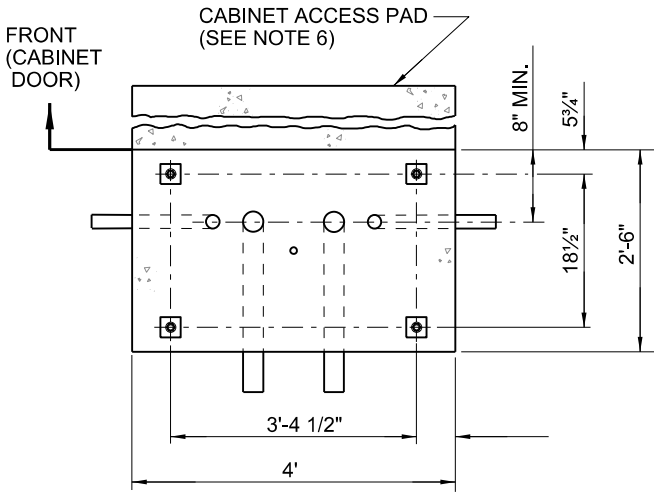

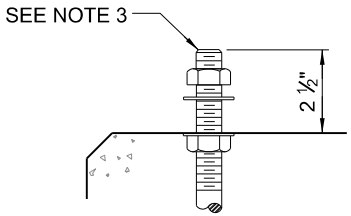

DETAIL 'A'

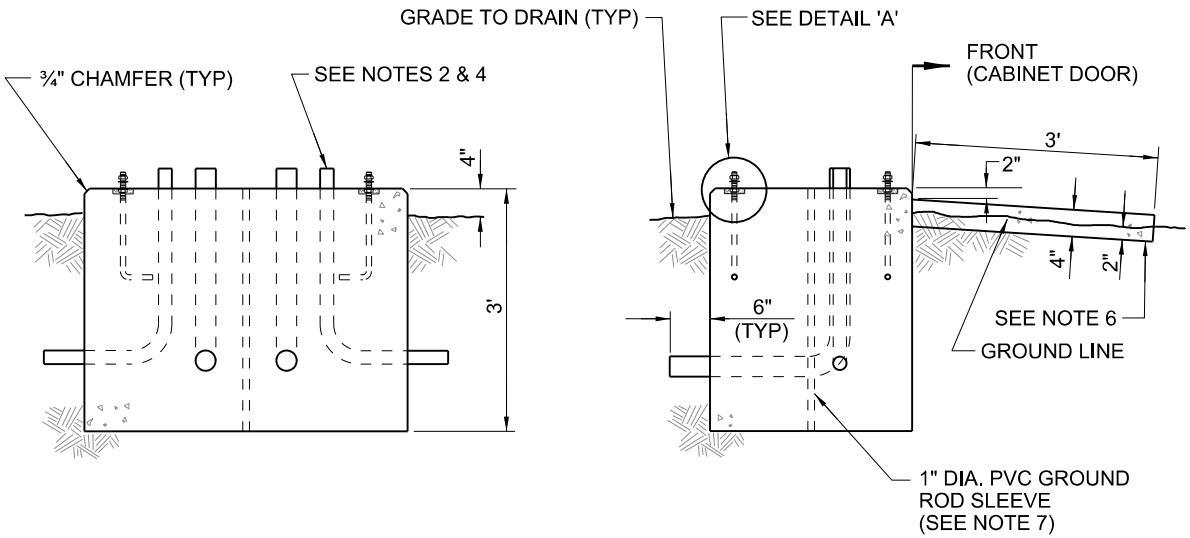

NOTES:

1. FOR MATERIAL AND INSTALLATION SPECIFICATIONS SEE MCDOT SUPPLEMENT SECTIONS 470 THRU 478.
2. FOR CONDUIT SIZE, LOCATION, AND QUANTITY, SEE TRAFFIC SIGNAL PLAN.
3. FOR ANCHOR BOLT INFORMATION SEE MCDOT DETAIL 4725.
4. CONDUIT SHALL EXTEND A MINIMUM OF 2" AND A MAXIMUM OF 4" ABOVE THE TOP OF THE FOUNDATION EXCEPT THE CONDUIT FOR THE GROUND ROD, WHICH SHALL BE FLUSH WITH THE TOP OF THE FOUNDATION.
5. GROUT OR MASTIC SHALL BE USED TO SEAL GAP BETWEEN THE CABINET AND FOUNDATION.
6. IN UNPAVED AREAS A CABINET ACCESS PAD, 4"X36"X 48", SHALL BE PLACED IN FRONT OF CABINET AND FACED AWAY FROM INTERSECTION. PAD SHALL BE SET 2" BELOW THE FOUNDATION ELEVATION AND SLOPED AWAY FROM CABINET.
7. THE CABINET FOUNDATION SHALL HAVE A ⅝" X 8' BONDING COPPER ROD.

MARICOPA COUNTY DEPARTMENT OF TRANSPORTATION	'P' CABINET FOUNDATION	DATE:	DETAIL NO.
STANDARD DETAIL		05/01/2015	4723

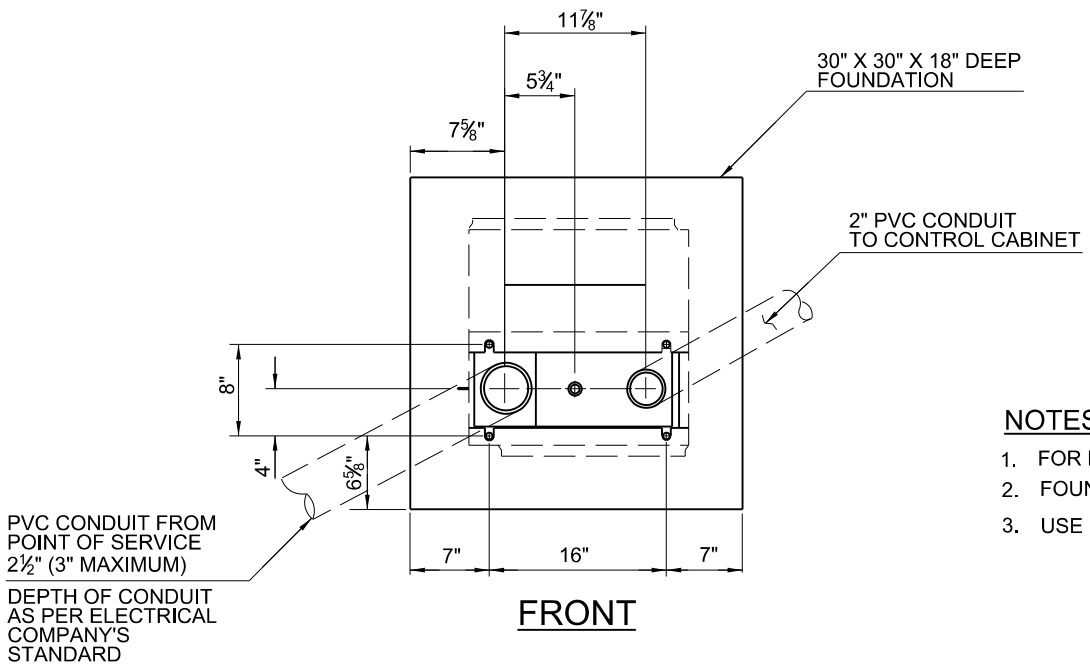

FRONT

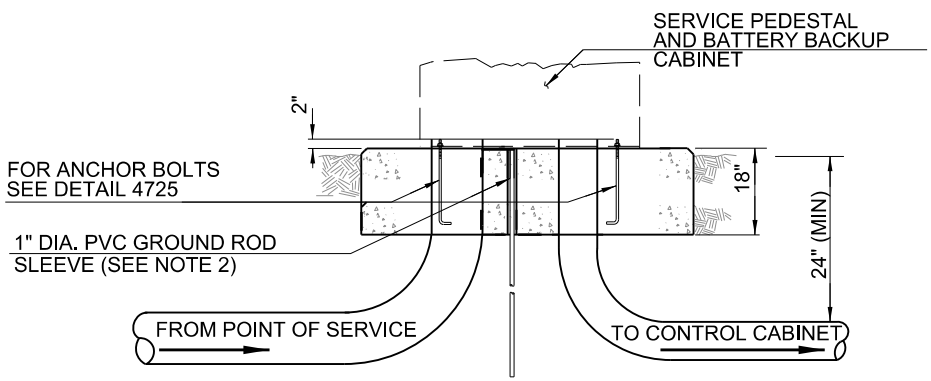

NOTES:

1. FOR MATERIAL AND CONSTRUCTION SPECIFICATION SEE SECTION 472.
2. FOUNDATIONS SHALL HAVE A ⅝" x 10' BONDED COPPER GROUNDING ROD.
3. USE GROUT OR MASTIC TO SEAL GAP BETWEEN THE CABINET AND FOUNDATION.

MARICOPA COUNTY DEPARTMENT OF TRANSPORTATION	COMBINATION SERVICE PEDESTAL AND BATTERY BACKUP FOUNDATION	DATE:	DETAIL NO.
STANDARD DETAIL		01/01/2011	4724

CABINET OR PEDESTAL	DETAIL	ANCHOR BOLTS	DIM. X
'P' (CABINET)	4723	¾"x 16"x 4"	3"
COMBINATION 'SP'(PEDESTAL) & 'BBS'(CABINET)	4724	½"x 12"x 3"	3"
SERVICE PEDESTAL	4829	½"x 12"x 3"	3"

POLE TYPE	DETAIL	ANCHOR BOLTS	DIM. X
'A'	4720	1"x 48"x 4"	6"
'SB'	4825-2	¾"x 18"x 4"	3"
'PB'	4750	¾"x 16"x 4"	3"

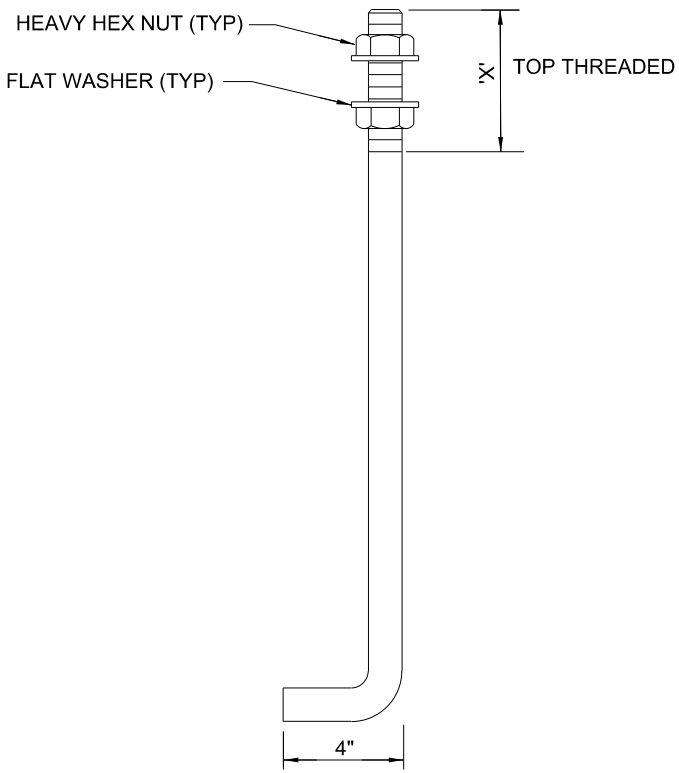

NOTES:

1. ALL ANCHOR BOLTS, WASHERS, AND NUTS SHALL CONFORM TO ASTM F1554 GRADE 105
2. EACH ANCHOR BOLT SHALL INCLUDE TWO FLAT WASHERS AND TWO NUTS, AND SHALL BE HOT DIP GALVANIZED IN ACCORDANCE WITH ASTM A-153.

MARICOPA COUNTY DEPARTMENT OF TRANSPORTATION	ANCHOR BOLT WITH HOOK	DATE:	DETAIL NO.
STANDARD DETAIL		06/15/2016	4725

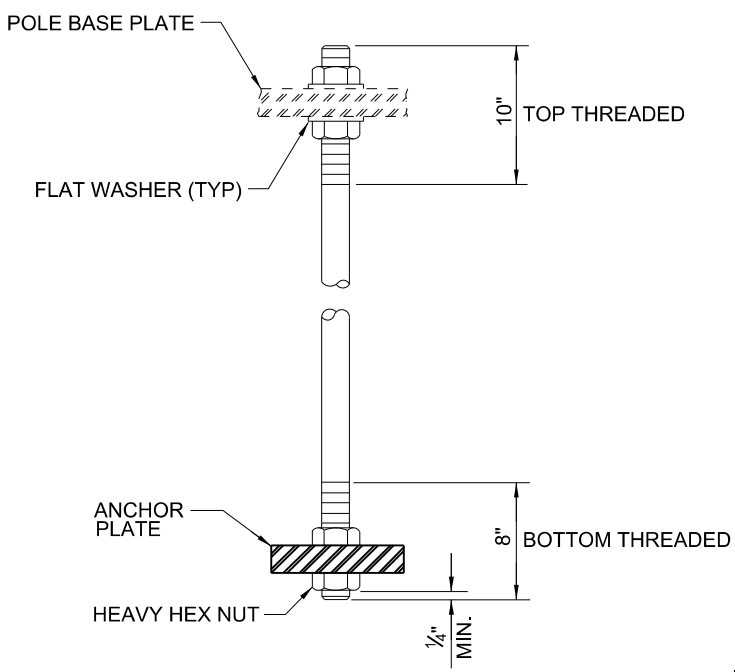

ANCHOR BOLT WITH PLATE				
POLE TYPE	DRAWING NO.	NOMINAL DIA.(In.)	TOTAL LENGTH(In.)	PLATE SIZE
'E'	4740	1¼"	52"	⅞" x 3½" x 3½"
'F'	4741-1	1¼"	52"	⅞" x 3½" x 3½"
'J'	4742	2"	70"	1½"x 5½"x 5½"
'Q'	4743	2"	70"	1½"x 5½"x 5½"
'K'	4748	2"	70"	1½"x 5½"x 5½"
'R'	4749-1	2"	70"	1½"x 5½"x 5½"

NOTES:

1. FOR INSTALLATION SPECIFICATIONS SEE MCDOT SUPPLEMENT SECTION 472.
2. ALL ANCHOR BOLTS, WASHERS, AND NUTS SHALL CONFORM TO ASTM F1554 GRADE 105.
3. EACH ANCHOR BOLT SHALL INCLUDE FOUR (4) FLAT WASHERS AND FOUR (4) NUTS, AND SHALL BE HOT DIP GALVANIZED IN ACCORDANCE WITH ASTM A153.

MARICOPA COUNTY DEPARTMENT OF TRANSPORTATION	ANCHOR BOLT WITH PLATE	DATE:	DETAIL NO.
STANDARD DETAIL		06/15/2016	4726

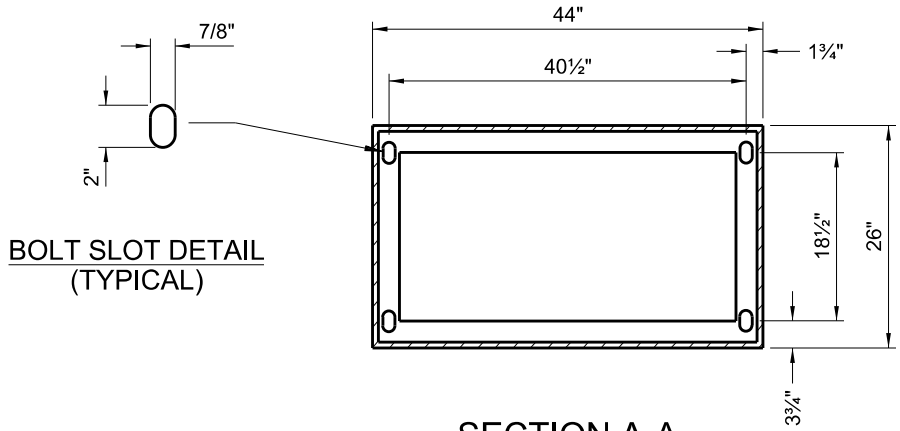

SECTION A-A

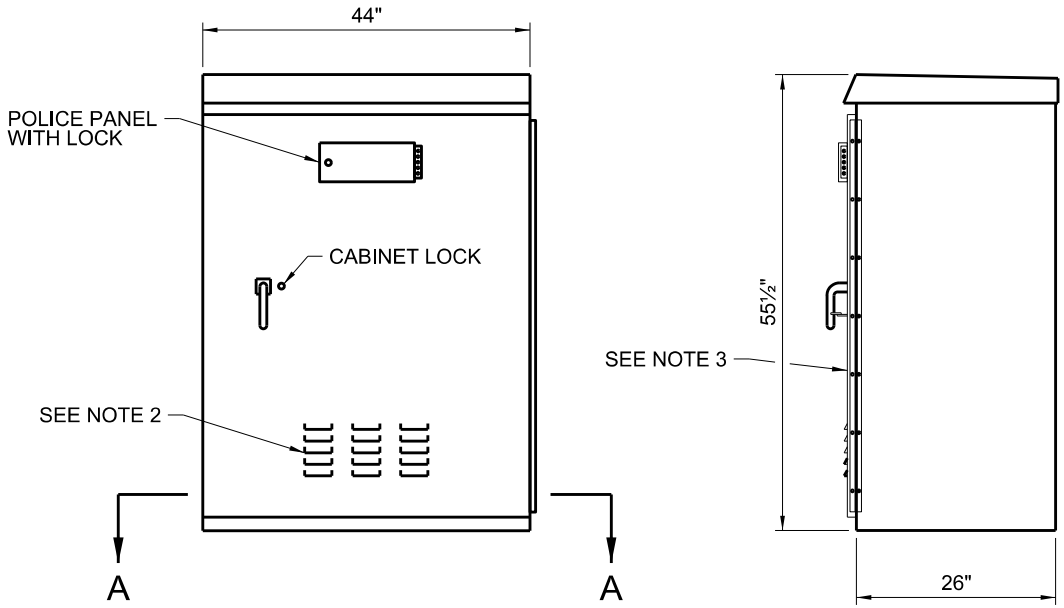

NOTES:

1. FOR MATERIAL AND INSTALLATION SPECIFICATIONS SEE MCDOT SUPPLEMENT SECTIONS 470 THRU 478.
2. VENTILATING AIR INLET LOUVERS 12" X 24" X 1" AIR FILTER.
3. FRONT OF CABINET SHALL FACE AWAY FROM INTERSECTION.

MARICOPA COUNTY DEPARTMENT OF TRANSPORTATION	P-44 CABINET	DATE:	DETAIL NO.
STANDARD DETAIL		01/01/2020	4730-1

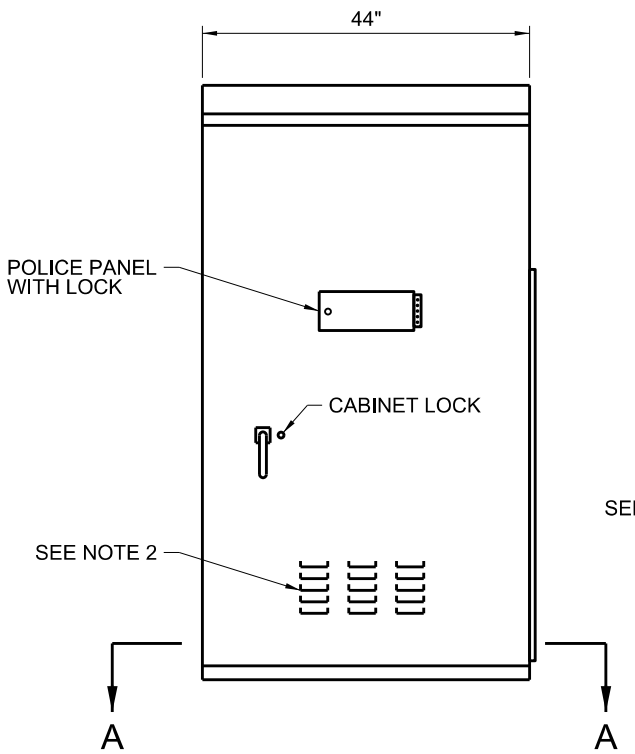

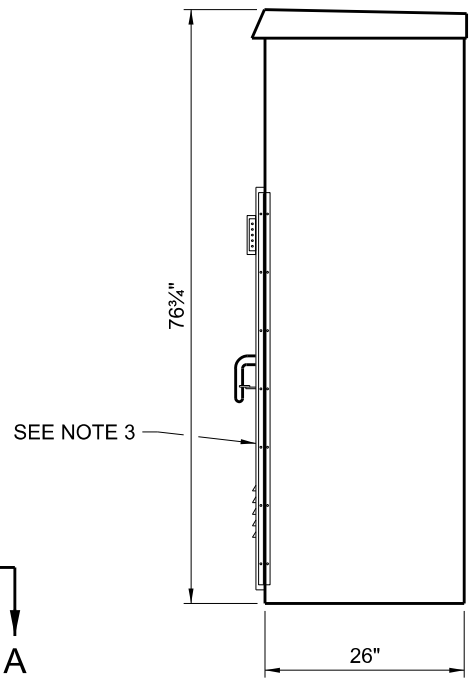

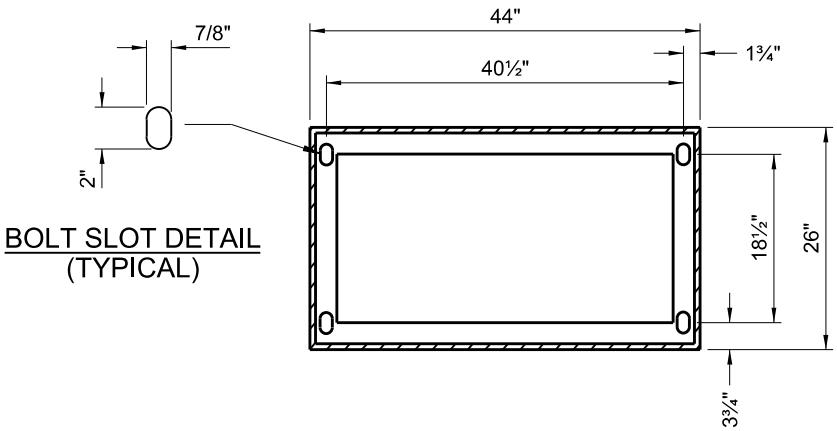

NOTES:

1. FOR MATERIAL AND INSTALLATION SPECIFICATIONS SEE MCDOT SUPPLEMENT SECTIONS 470 THRU 478.
2. VENTILATING AIR INLET LOUVERS 12" X 24" X 1" AIR FILTER.
3. FRONT OF CABINET SHALL FACE AWAY FROM INTERSECTION.

MARICOPA COUNTY DEPARTMENT OF TRANSPORTATION	R-77 CABINET	DATE:	DETAIL NO.
STANDARD DETAIL		01/01/2020	4730-2

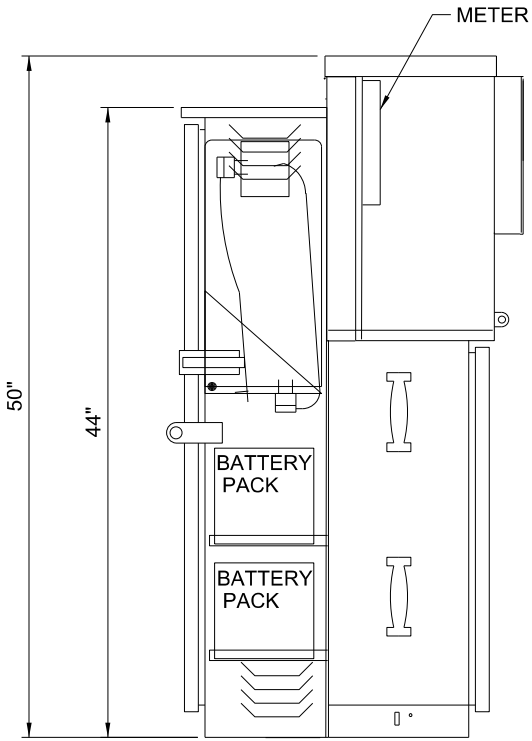

LEFT SIDE

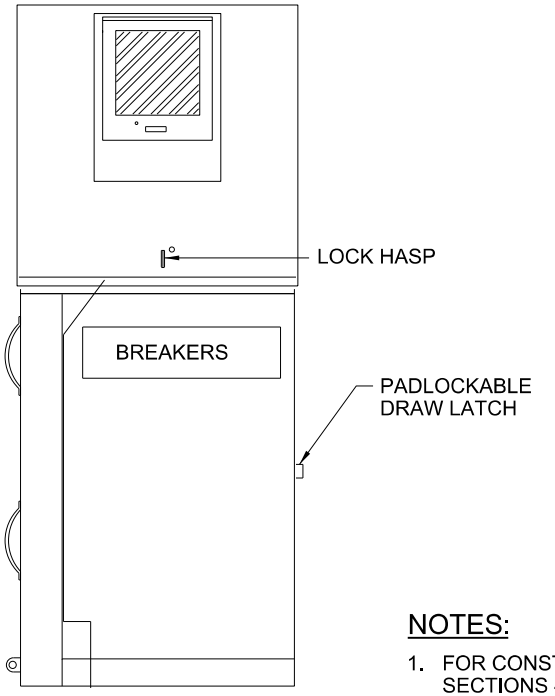

FRONT VIEW

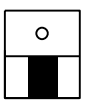

PLAN SYMBOL

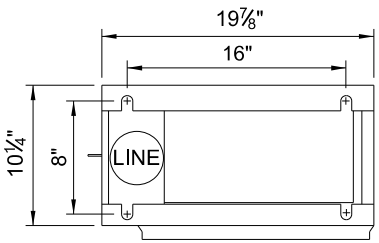

BASE PLAN

NOTES:

1. FOR CONSTRUCTION SPECIFICATIONS SEE MCDOT SUPPLEMENT SECTIONS 470 THRU 478.
2. EXTERIOR SHALL BE 12 GA. H.D. GALVANIZED STEEL, THE INTERIOR SHALL BE 14 GA. COLD ROLLED STEEL. ALL WELDS SHALL BE ELECTRICALLY WELDED AND REINFORCED WHERE REQUIRED.
3. CONSTRUCTION SHALL BE NEMA 3R AND 12. RAINTIGHT AND DUSTTIGHT.
4. ALL NUTS, BOLTS, SCREWS AND HINGES SHALL BE STAINLESS STELL.
5. NUTS, BOLTS AND SCREWS SHALL NOT BE VISIBLE FROM OUTSIDE OF ENCLOSURE.
6. CONTROL WIRING SHALL BE MARKED AT BOTH ENDS WITH PERMANENT WIRE MARKERS.
7. A PLASTIC COVERED WIRING DIAGRAM SHALL BE SUPPLIED WITH ENCLOSURE.
8. THE ENCLOSURE SHALL BE FACTORY WIRED AND CONFORM TO REQUIRED NEMA STANDARDS.
9. FRONT OF CABINET ENCLOSURE SHALL FACE TOWARDS THE INTERSECTION.

MARICOPA COUNTY DEPARTMENT OF TRANSPORTATION	'SP' ELECTRICAL SERVICE PEDESTAL & 'BBS' BATTERY BACKUP SYSTEM CABINET	DATE:	DETAIL NO.
STANDARD DETAIL		04/01/2009	4731-1

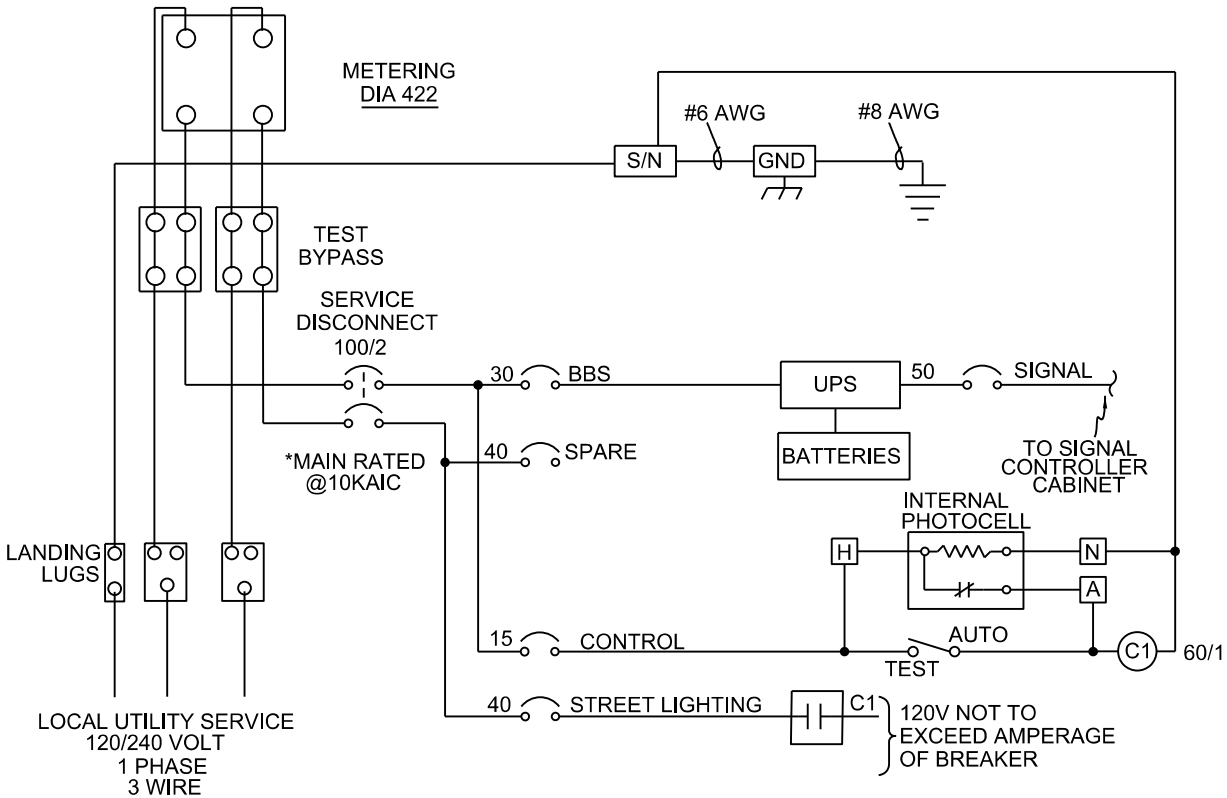

SERVICE EQUIPMENT
WIRING DIAGRAM

NOTES:

1. SIGNAL AND LIGHTING SHALL BE WIRED ON SEPARATE PHASES.
2. LOAD CURRENT FOR ALL BREAKERS SHALL NOT EXCEED 80% OF BREAKER AMPERAGE.

MARICOPA COUNTY DEPARTMENT OF TRANSPORTATION	SERVICE PEDESTAL AND BATTERY BACKUP WIRING SCHEMATIC	DATE:	DETAIL NO.
STANDARD DETAIL		04/09	4731-2

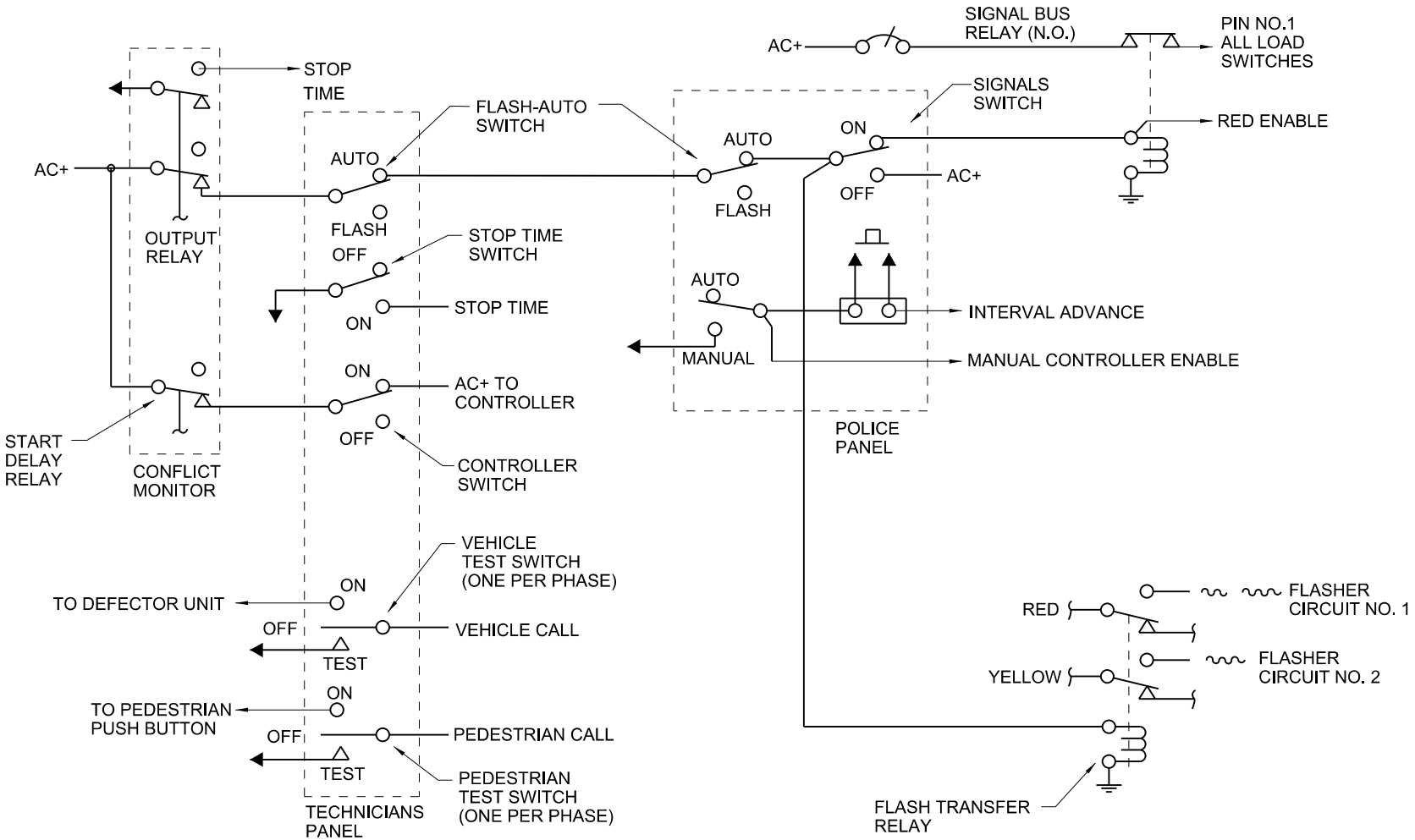

NOTES:

1. MOV OR RC NETWORK REQUIRED ACROSS RELAY COILS.
2. CIRCUIT SHOWN WITH POWER APPLIED.

MARICOPA COUNTY DEPARTMENT OF TRANSPORTATION	CONTROLLER CABINET WIRING SCHEMATIC	DATE:	DETAIL NO.
STANDARD DETAIL		04/01/2009	4735

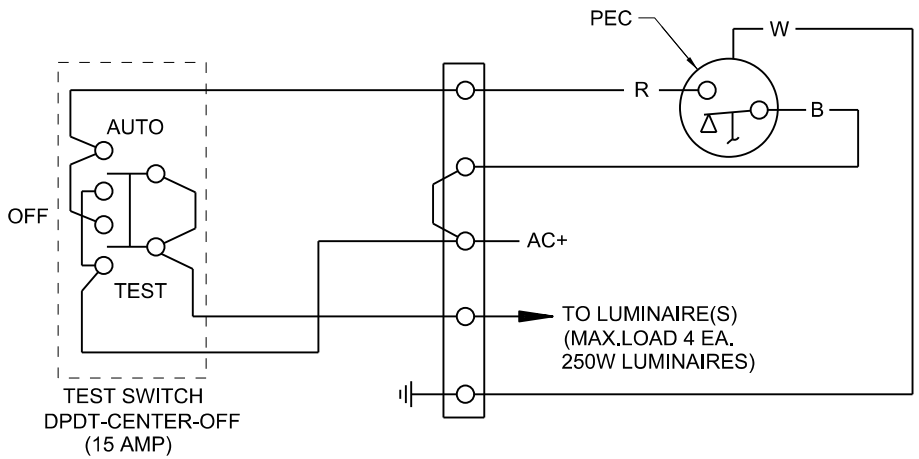

NOTES:

1. THE PHOTO ELECTRIC CELL (PEC) SHALL BE MOUNTED ON THE CONTROLLER EQUIPMENT CABINET. IT SHALL BE A PRECISION MODEL T-30 OR ALR MODEL AT 30-120V AND RATED AT 3000 VA, 120 VOLTS.

MARICOPA COUNTY DEPARTMENT OF TRANSPORTATION		DATE:	DETAIL NO.
STANDARD DETAIL	LUMINAIRE CIRCUIT	04/01/2009	4737

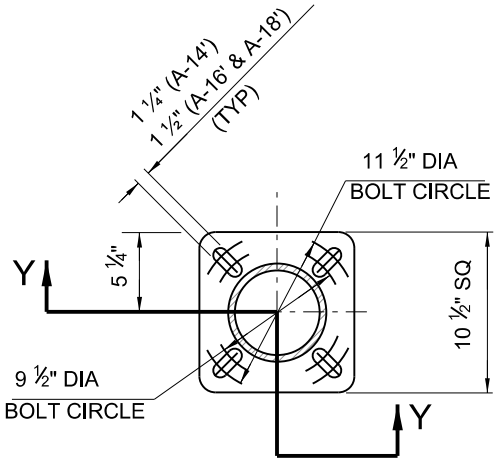

SECTION X-X

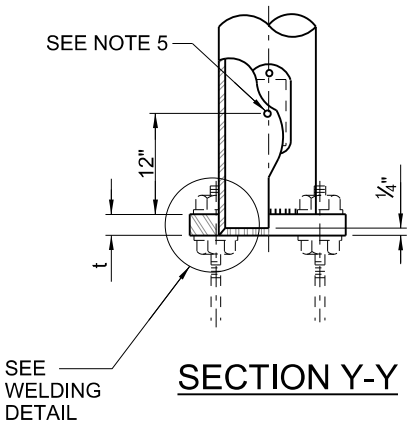

SECTION Y-Y

BASE PLATE DETAILS

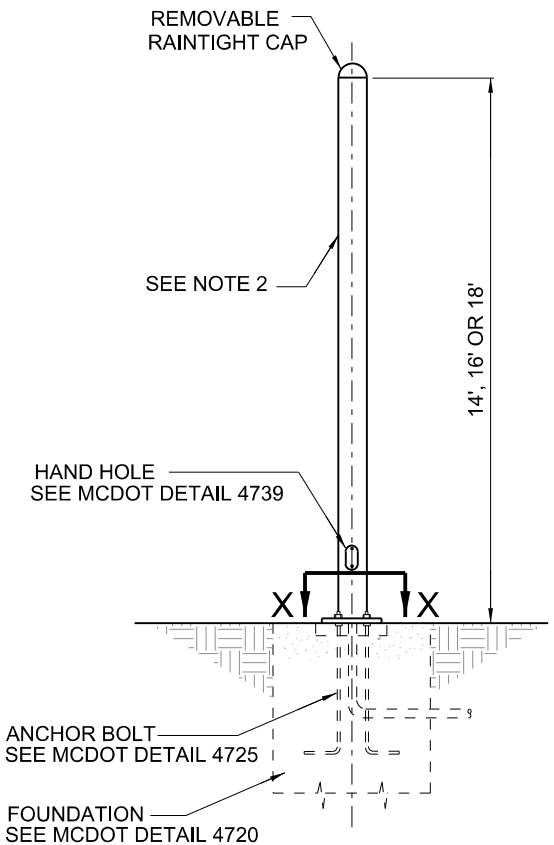

POLE DETAIL

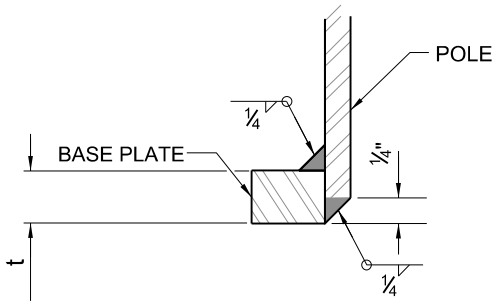

POLE TYPE	t BASE PLATE THICKNESS
A-14'	¾"
A-16'	1"
A-18'	1"

WELDING DETAIL

NOTES:

1. FOR CONSTRUCTION AND INSTALLATION SPECIFICATIONS, SEE MCDOT SUPPLEMENT SECTIONS 470 THRU 478.
2. THE POLE SHALL BE A STANDARD 4" GALVANIZED PIPE, SCHEDULE 40, (0.237" WALL THICKNESS), FOR A-14' AND A-16'.
3. THE POLE SHALL BE X-STRONG 4" GALVANIZED PIPE, SCHEDULE 80, (0.337" WALL THICKNESS), FOR A-18'.
4. THE POLE BASE PLATE SHALL BE STEEL CONFORMING TO THE REQUIREMENTS OF ASTM A36.
5. A ¼" TAPPED HOLE FOR A GROUND CONNECTION SHALL BE PROVIDED.

MARICOPA COUNTY DEPARTMENT OF TRANSPORTATION	TYPE 'A' POLE	DATE:	DETAIL NO.
STANDARD DETAIL		06/15/2016	4738

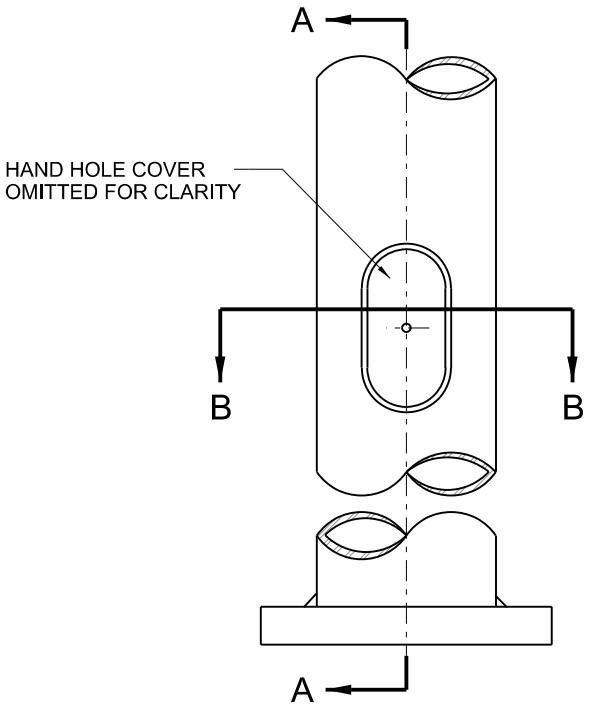

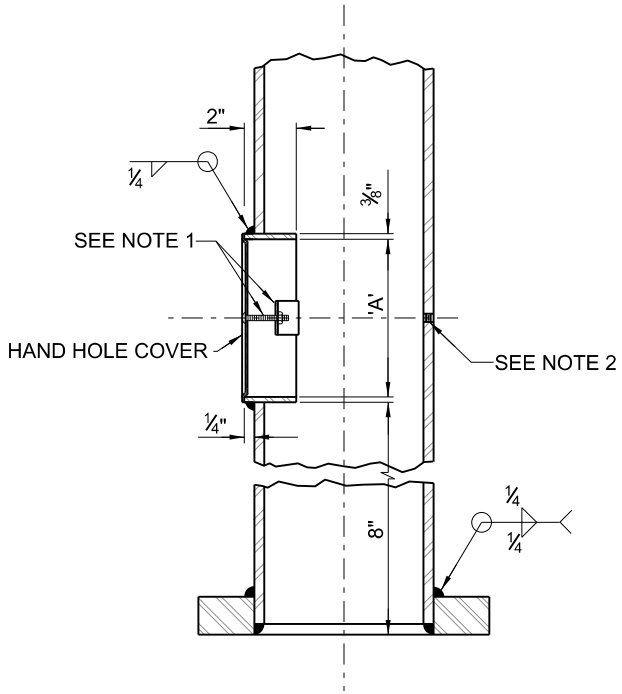

SECTION A-A

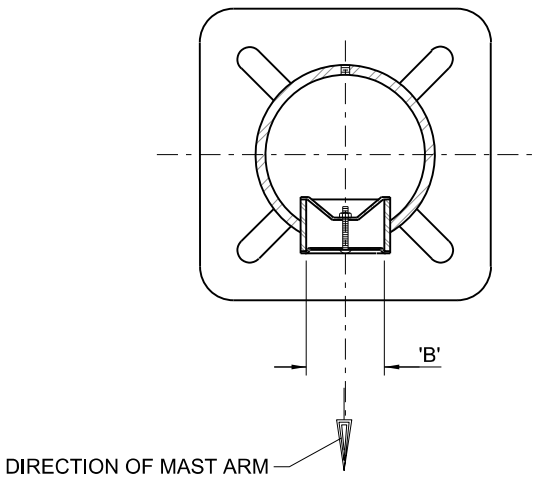

HAND HOLE DIM'S.		
Pole Type	'A'	'B'
"A"&"PB"	5"	3"
All Others	6½"	4"

NOTES:

1. HAND HOLE COVER SHALL BE SECURED BY A BRASS MACHINE SCREW AND HOLDING CLEAT.
2. POLE GROUND SHALL BE ¼ - 20 TAPPED HOLE LOCATED AS SHOWN.
3. LOWER HAND HOLE SHALL BE ORIENTED SO IT IS ALIGNED WITH THE MAST ARM.

MARICOPA COUNTY DEPARTMENT OF TRANSPORTATION	POLE LOWER HAND HOLE DETAILS TITLE LINE 2	DATE:	DETAIL NO.
STANDARD DETAIL		04/01/2009	4739-1

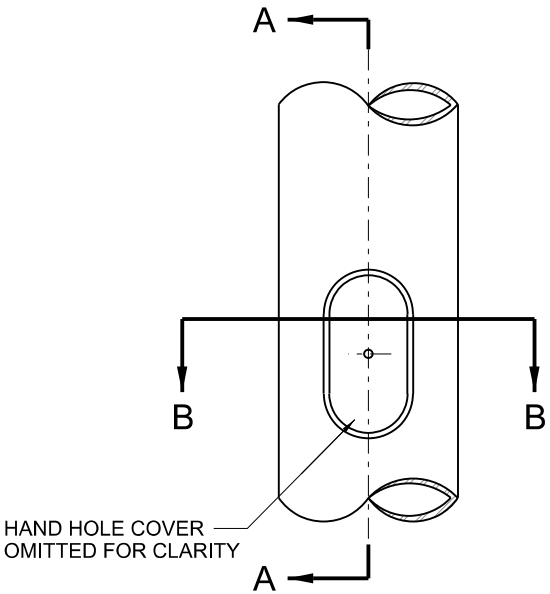

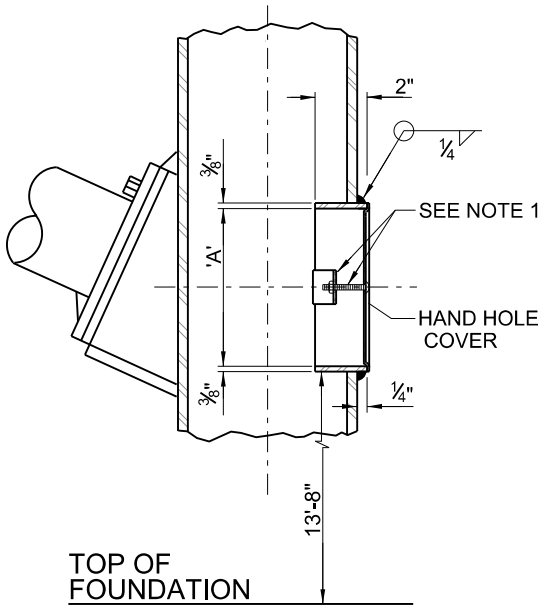

SECTION A-A

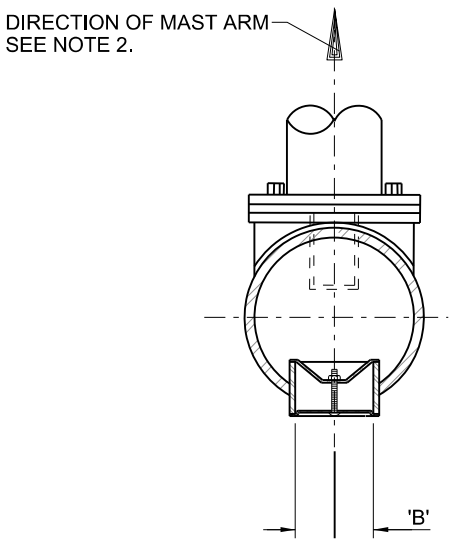

SECTION B-B

HAND HOLE DIM'S.		
Pole Type	'A'	'B'
"Q"&"R"	6½"	4"

NOTES:

1. HAND HOLE COVER SHALL BE SECURED BY A BRASS MACHINE SCREW AND HOLDING CLEAT.
2. UPPER HAND HOLE SHALL BE ORIENTED SO THAT IT IS ALIGNED WITH THE SIGNAL MAST ARM AND OPPOSITE FROM THE SIGNAL MAST ARM.

MARICOPA COUNTY DEPARTMENT OF TRANSPORTATION	POLE UPPER HAND HOLE DETAIL	DATE:	DETAIL NO.
STANDARD DETAIL		10/01/2012	4739-2

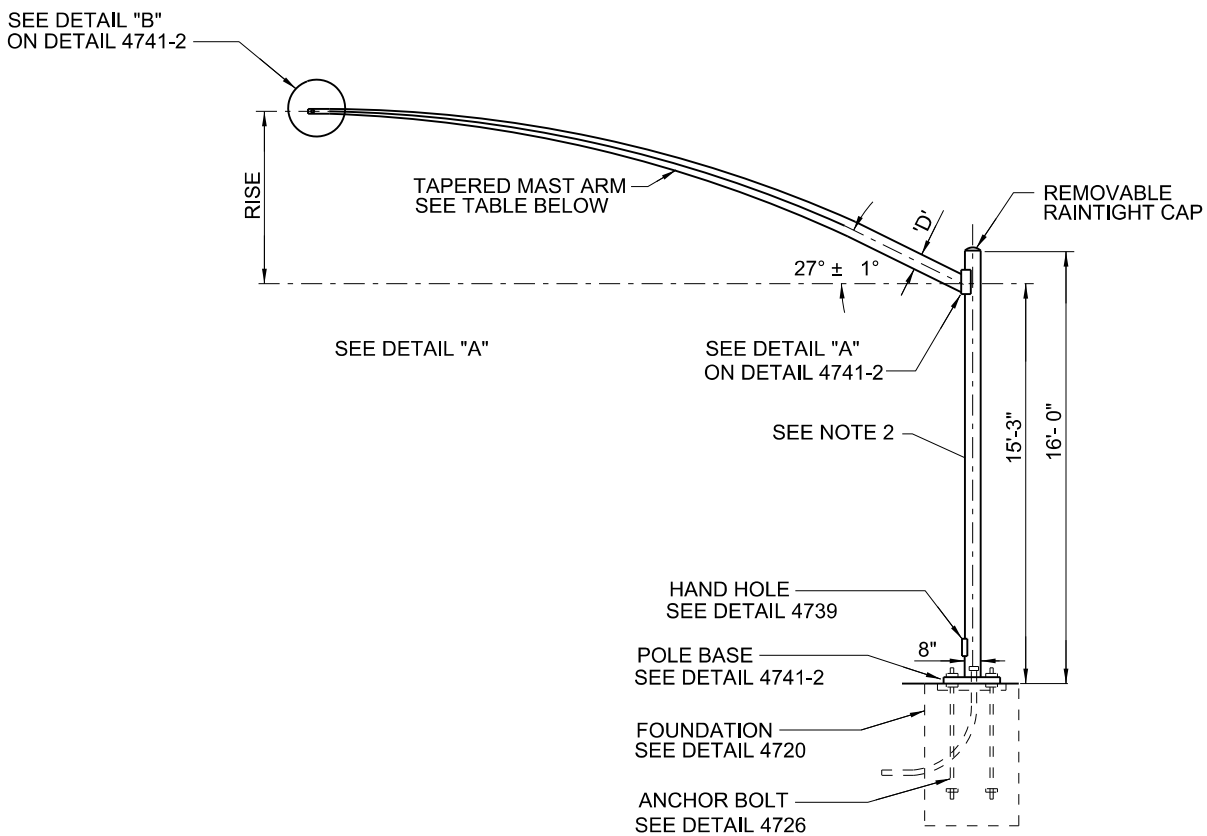

MAST ARM INFORMATION					
Length	Rise	Ga.	"D"Min.	Ga.	"D"Min.
12'	4'-3"	11	4 15/16"	10	4 5/16"
15'	4'-9"	11	5 5/16"	10	4 3/4"
18'	5'-9"	11	5 13/16"	10	5 3/16"
20'	5'-9"	7	5 1/4"	7	5 1/4"

NOTES:

1. FOR CONSTRUCTION AND INSTALLATION SPECIFICATIONS SEE MCDOT SUPPLEMENT, SECTIONS 470 THRU 478.
2. THE POLE SHALL BE 7 GAUGE TAPERED STEEL.

MARICOPA COUNTY DEPARTMENT OF TRANSPORTATION	TYPE 'E' POLE	DATE:	DETAIL NO.
STANDARD DETAIL		10/25/2013	4740

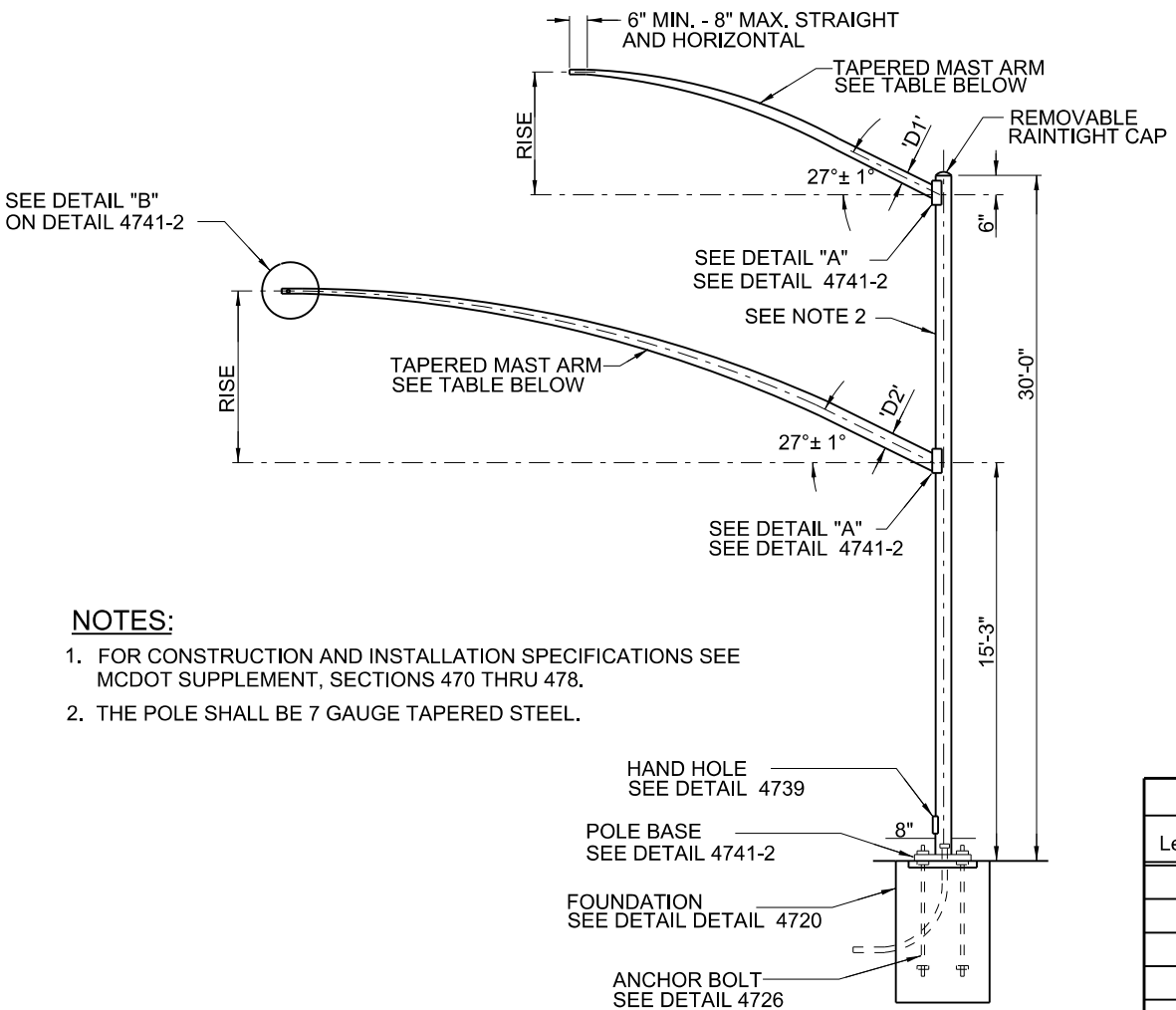

NOTES:

1. FOR CONSTRUCTION AND INSTALLATION SPECIFICATIONS SEE MCDOT SUPPLEMENT, SECTIONS 470 THRU 478.
2. THE POLE SHALL BE 7 GAUGE TAPERED STEEL.

MAST ARM INFORMATION						
Length	Rise	Ga.	"D1" Min.	"D2"Min.	Ga.	"D1 & D2"Min.
6'	2'-0"	11	3 1/4"	---	10	3 3/8"
8'	2'-6"	11	3 1/2"	---	10	3 5/8"
10'	3'-4"	11	3 13/16"	---	10	3 7/8"
12'	4'-3"	11	4 1/16"	4 15/16"	10	4 5/16"
15'	4'-9"	11	4 1/4"	5 5/16"	10	4 3/4"
18'	5'-9"	11	5 3/4"	5 13/16"	10	5 3/16"
20'	5'-9"	7	5 1/4"	5 1/4"	7	5 1/4"

MARICOPA COUNTY DEPARTMENT OF TRANSPORTATION	TYPE 'F' POLE	DATE:	DETAIL NO.
STANDARD DETAIL		10/25/2013	4741-1

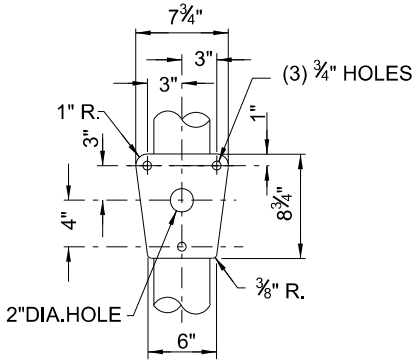

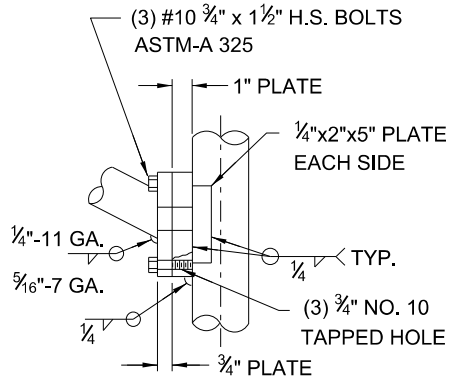

DETAIL "A"

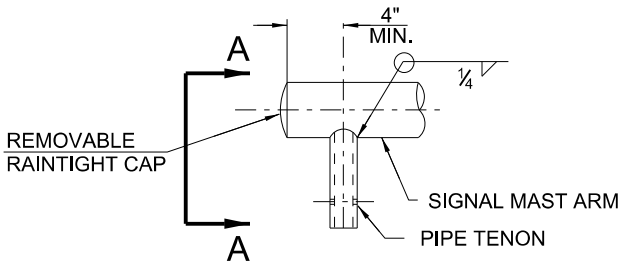

DETAIL "B"

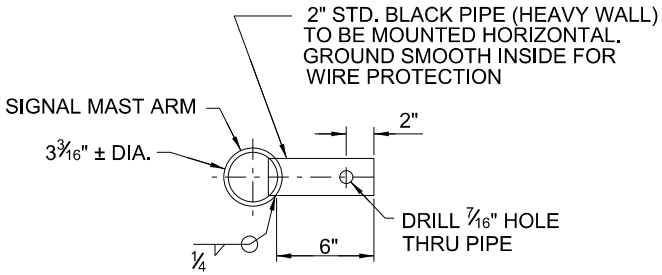

SECTION A-A

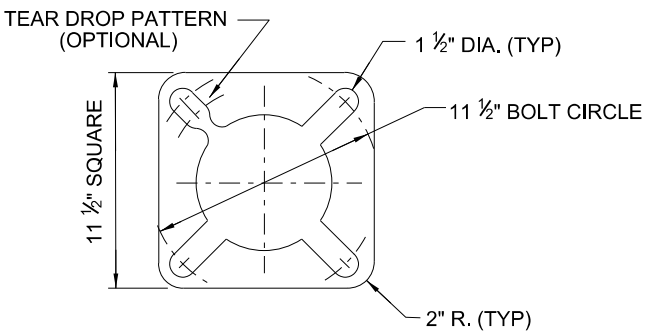

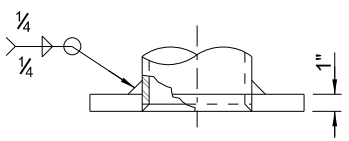

'E' POLE

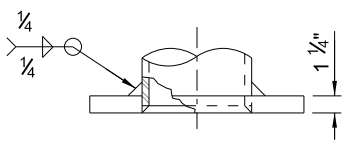

'F' POLE

POLE BASE DETAIL

MARICOPA COUNTY DEPARTMENT OF TRANSPORTATION	'E' & 'F' POLE DETAILS	DATE:	DETAIL NO.
STANDARD DETAIL		04/2009	4741-2

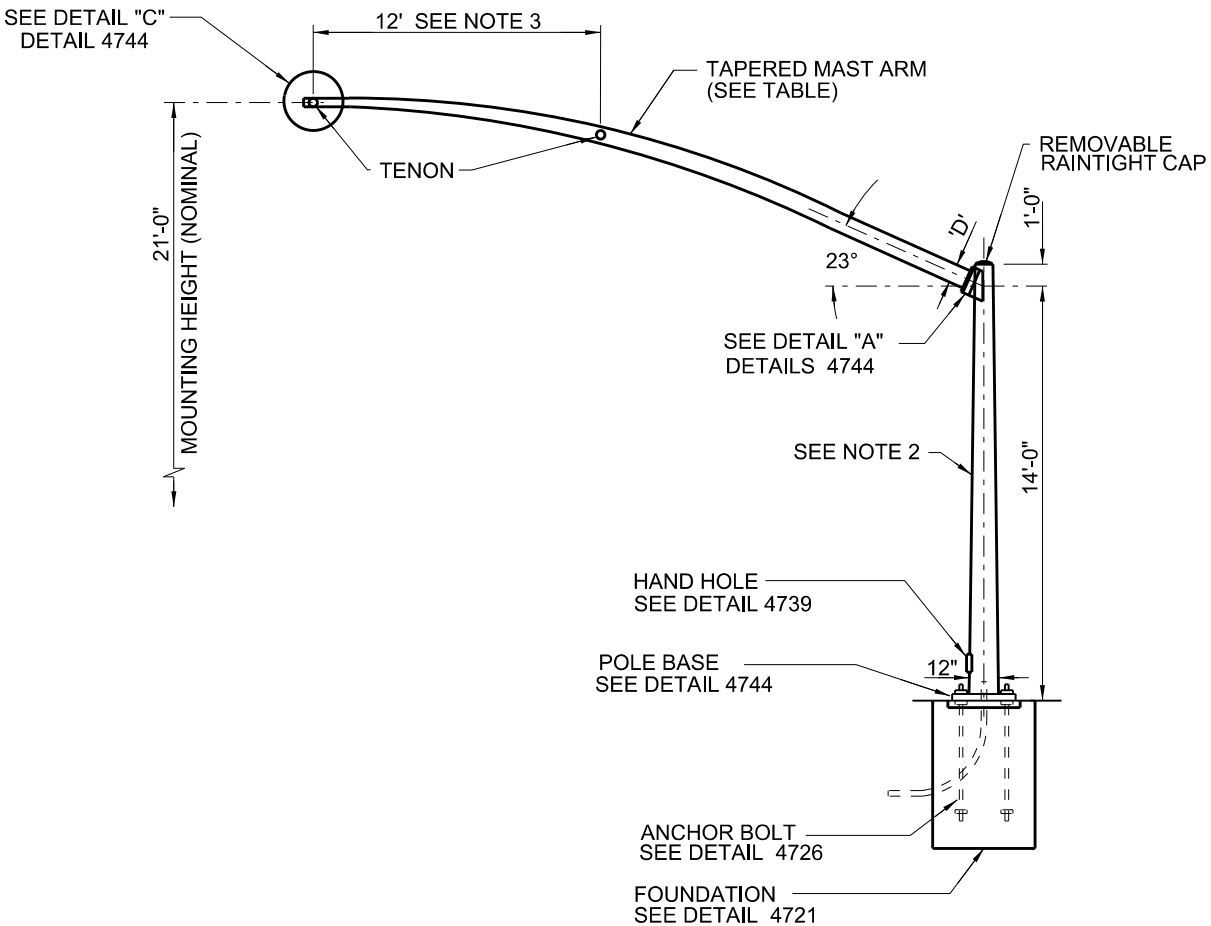

MAST ARM INFORMATION			
Length	Ga.	'D' Dim.	Tenon
20'	7	7"	2
25'	7	7"	2
30'	7	8"	2
35'	3	8 1/16"	2
40'	3	9 3/8"	2

NOTES:

1. FOR CONSTRUCTION AND INSTALLATION SPECIFICATIONS SEE MCDOT SUPPLEMENT, SECTIONS 470 THRU 478.
2. THE POLE SHALL BE 3 GAUGE TAPERED STEEL.
3. USE 10' TENON SPACING FOR 20' MAST ARM.

MARICOPA COUNTY DEPARTMENT OF TRANSPORTATION	TYPE 'J' POLE	DATE:	DETAIL NO.
STANDARD DETAIL		10/1/2013	4742

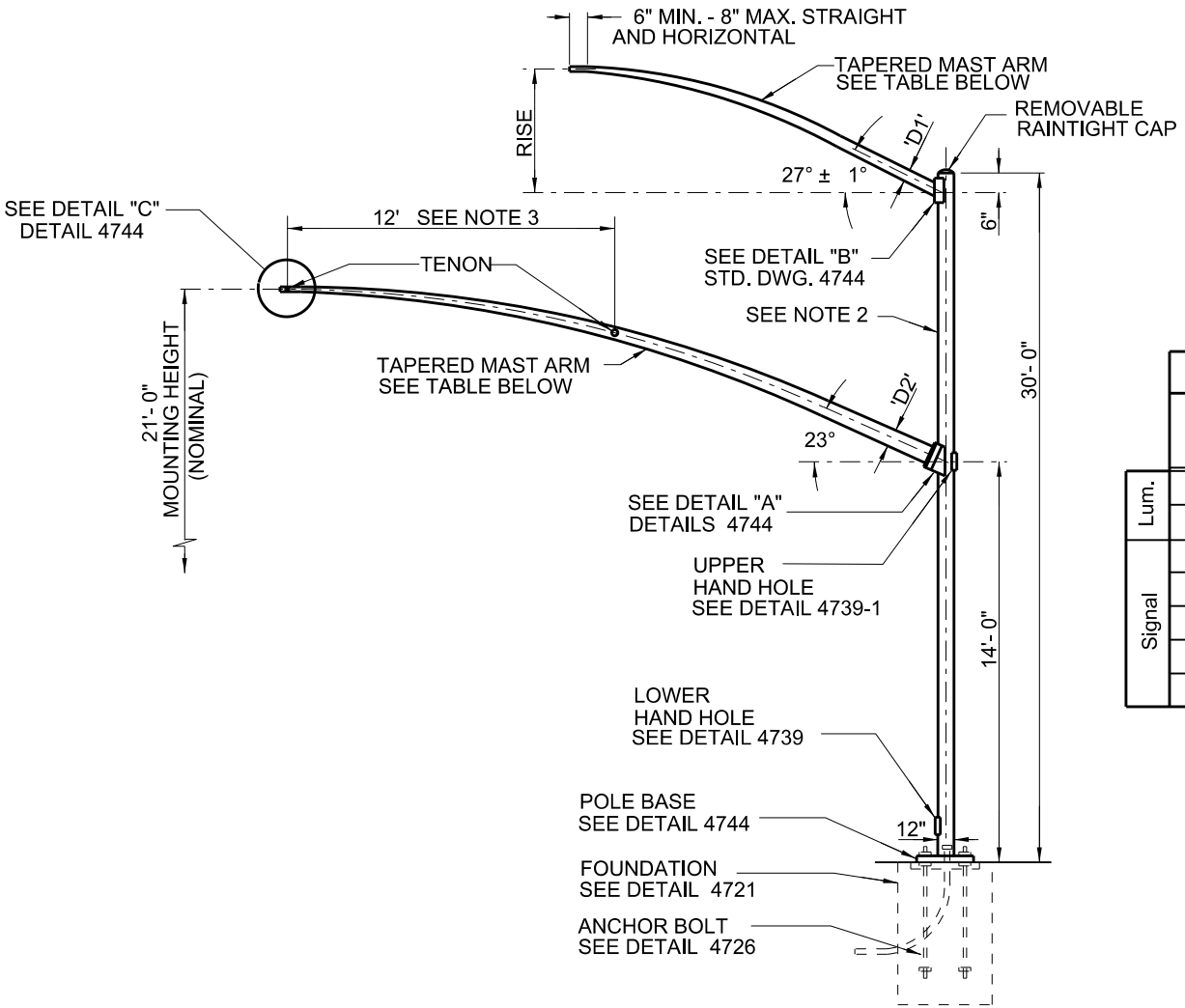

	MAST ARM INFORMATION						
		Lum. M.A.		'D1' Min.			
	Length	Rise	Gauge	10 Ga.	11 Ga.	'D2'Min.	Tenon
Lum.	15'	4'-9"	10 or 11	4 ¼"	4 ¾"	----	----
Lum.	20'	5'-9"	7	5 ¼"	5 ¼"	----	----
Signal	20'	----	7	----	----	7"	2
Signal	25'	----	7	----	----	7"	2
Signal	30'	----	7	----	----	8"	2
Signal	35'	----	3	----	----	8 11/16"	2
Signal	40'	----	3	----	----	9 ⅜ "	2

NOTES:

1. FOR CONSTRUCTION AND INSTALLATION SPECIFICATIONS SEE MCDOT SUPPLEMENT SECTIONS, 470 THRU 478.
2. THE POLE SHALL BE 3 GAUGE TAPERED STEEL.
3. USE 10' TENON SPACING FOR 20' SIGNAL MAST ARM.

MARICOPA COUNTY DEPARTMENT OF TRANSPORTATION	TYPE 'Q' POLE	DATE:	DETAIL NO.
STANDARD DETAIL		10/1/2013	4743

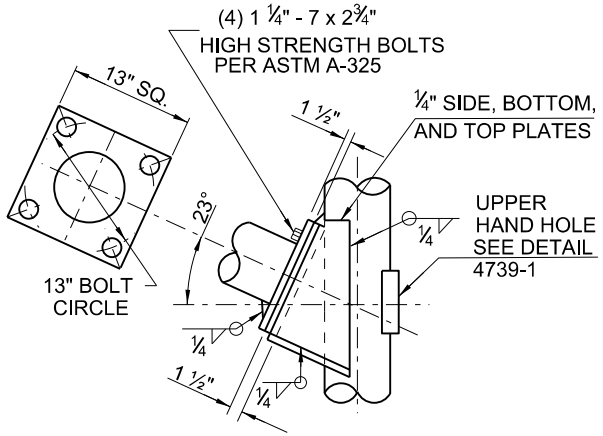

DETAIL "A"

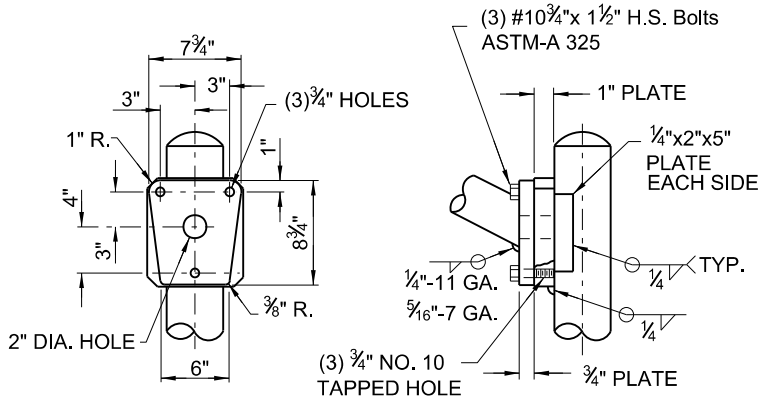

DETAIL "B"

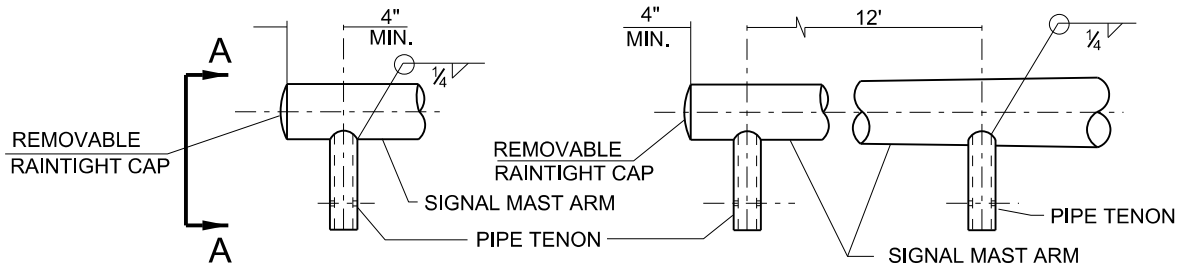

SINGLE TENON

DOUBLE TENON

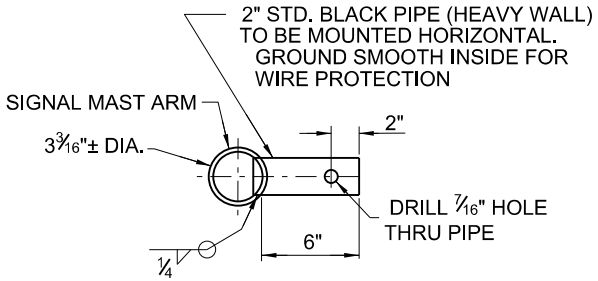

SECTION A-A

DETAIL "C"

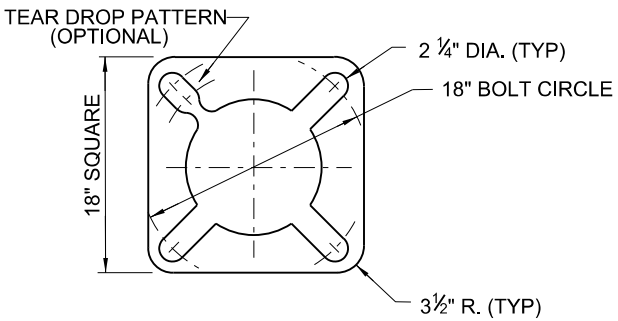

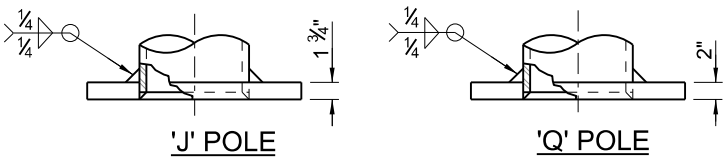

'J' POLE

'Q' POLE

POLE BASE DETAIL

MARICOPA COUNTY DEPARTMENT OF TRANSPORTATION	'J' & 'Q' POLE DETAILS	DATE:	DETAIL NO.
STANDARD DETAIL		02/01/2013	4744

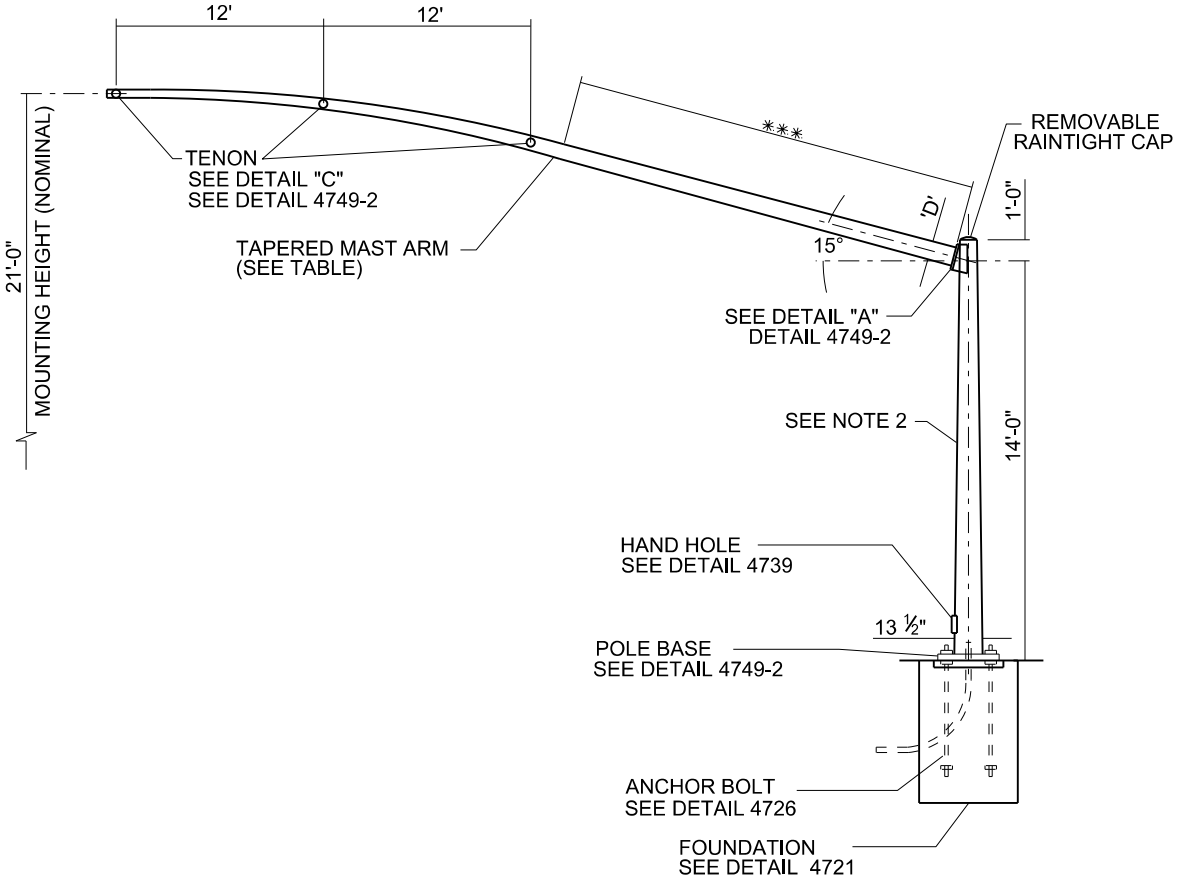

MAST ARM INFORMATION			
Length	Gauge	'D'Dim.	Tenon
45'	0 & 3	10 1/16"	3
50'	0 & 3	10 3/4"	3
55'	0 & 3	11 7/16"	3

*** FIRST 25' OF THE 50' & 55' MAST ARM AND THE FIRST 20' OF THE 45' MAST ARM SHALL BE 0 GAUGE. THE REMAINDER OF THE MAST ARMS SHALL BE 3 GAUGE.

NOTES:

1. FOR CONSTRUCTION AND INSTALLATION SPECIFICATIONS SEE MCDOT SUPPLEMENT, SECTIONS 470 THRU 478.
2. THE POLE SHALL BE 0 GAUGE TAPERED STEEL.

MARICOPA COUNTY DEPARTMENT OF TRANSPORTATION	TYPE 'K' POLE	DATE:	DETAIL NO.
STANDARD DETAIL		04/01/2009	4748

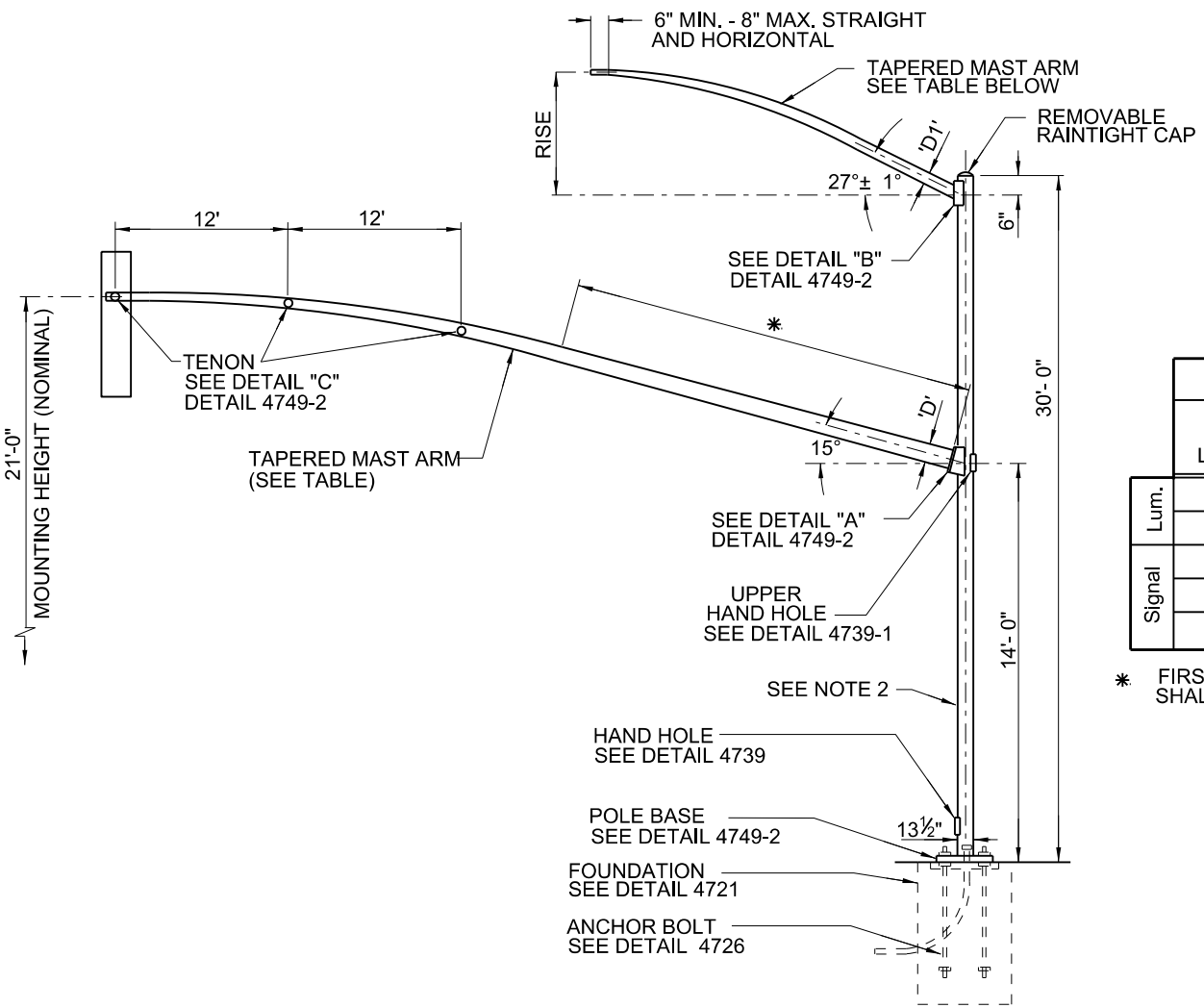

MAST ARM INFORMATION

	Length	Lum.M.A. Rise	Gauge	'D1'Min.	'D2'Min.	Tenon
Lum.	20'	5'-9"	7	5 ¼"	----	----
Lum.					----	----
Signal	45'	----	0 & 3 *	----	10 1/16"	3
Signal	50'	----	0 & 3 *	----	10 ¾"	3
Signal	55'	----	0 & 3 *	----	11 7/16"	3

* FIRST 25' OF THE 50' & 55' MAST ARM AND THE FIRST 20' OF THE 45' MAST ARM SHALL BE 0 GAUGE. THE REMAINDER OF THE MAST ARM SHALL BE 3 GAUGE.

NOTES:

1. FOR CONSTRUCTION AND INSTALLATION SPECIFICATIONS SEE MCDOT SUPPLEMENT, SECTIONS 470 THRU 478.
2. THE POLE SHALL BE 0 GAUGE TAPERED STEEL.

MARICOPA COUNTY DEPARTMENT OF TRANSPORTATION	TYPE 'R' POLE	DATE:	DETAIL NO.
STANDARD DETAIL		10/08/2012	4749-1

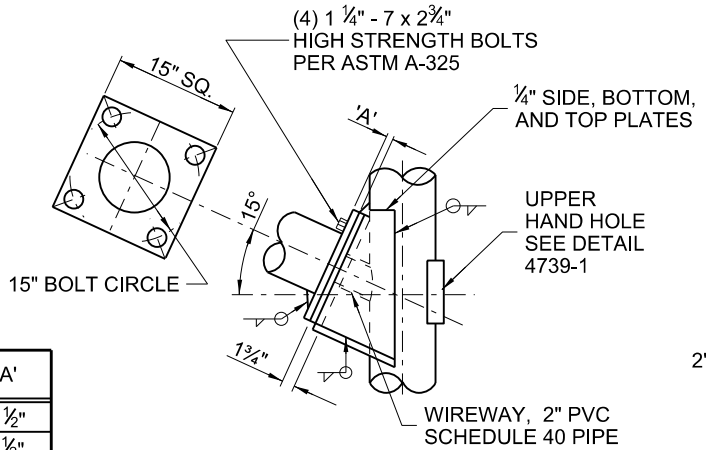

M. A. Length	'A'
45'	1 ½"
50'	1 ½"
55'	1 ½"

DETAIL "A"

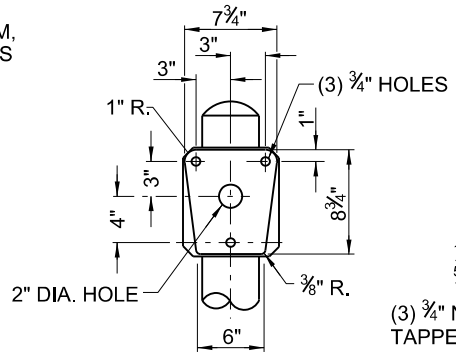

DETAIL "B"

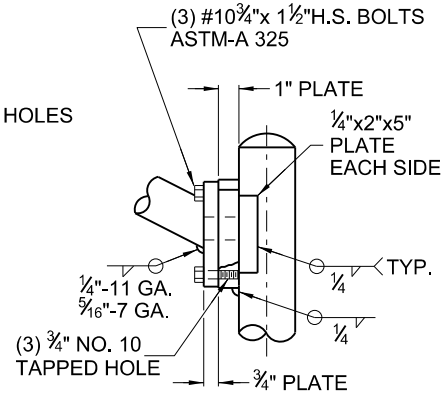

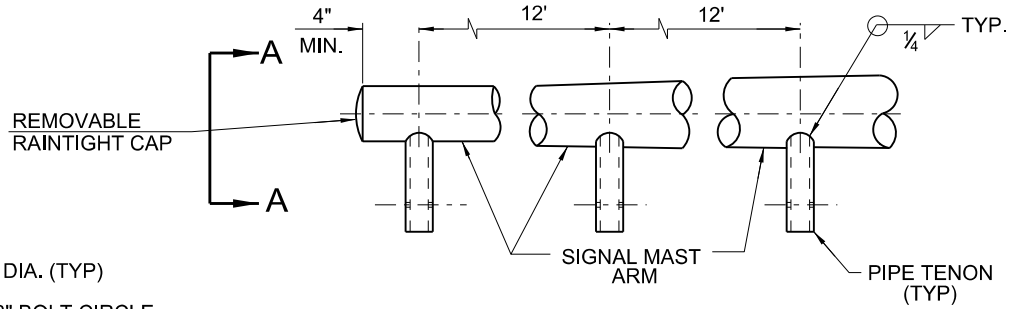

DETAIL "C"

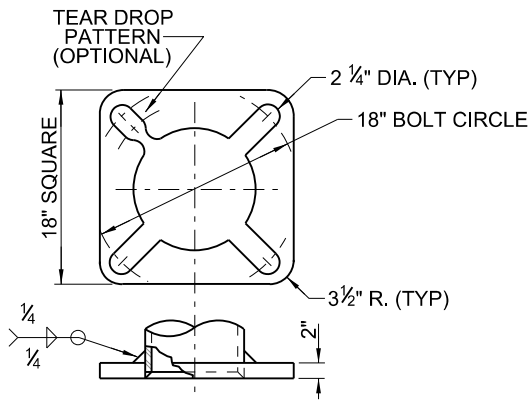

POLE BASE DETAIL

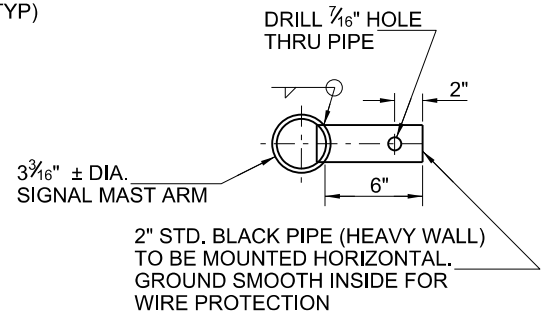

SECTION A-A

MARICOPA COUNTY DEPARTMENT OF TRANSPORTATION	TYPE 'K' & 'R' POLE DETAILS	DATE:	DETAIL NO.
STANDARD DETAIL		04/01/2009	4749-2

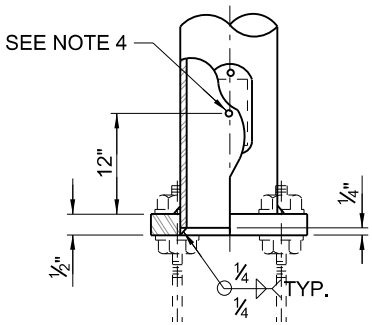

SECTION Y-Y

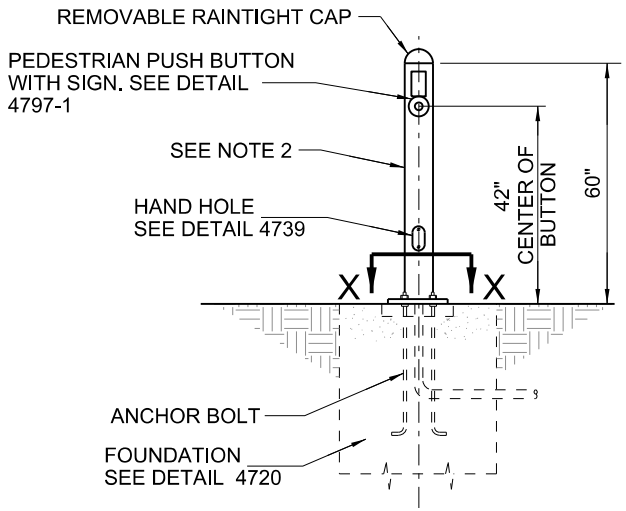

BASE PLATE DETAILS

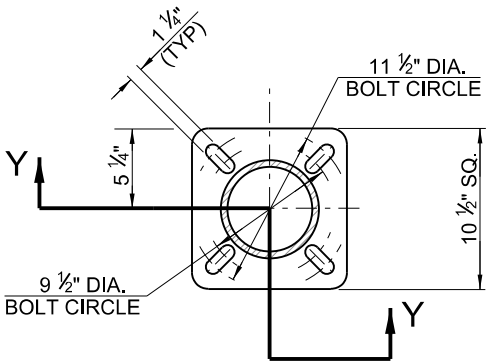

SECTION X-X

NOTES:

1. FOR CONSTRUCTION AND INSTALLATION SPECIFICATIONS SEE MCDOT SUPPLEMENT, SECTIONS 470 THRU 478.
2. THE POLE SHALL BE A STANDARD 4" GALVANIZED PIPE, SCHEDULE 40, (0.237" WALL THICKNESS).
3. THE POLE PLATE SHALL BE ½" STEEL CONFORMING TO THE REQUIREMENTS OF ASTM A36.
4. A ¼" TAPPED HOLE FOR A GROUND CONNECTION SHALL BE PROVIDED.

MARICOPA COUNTY DEPARTMENT OF TRANSPORTATION	TYPE 'PB' POLE	DATE:	DETAIL NO.
STANDARD DETAIL		04/01/2009	4750

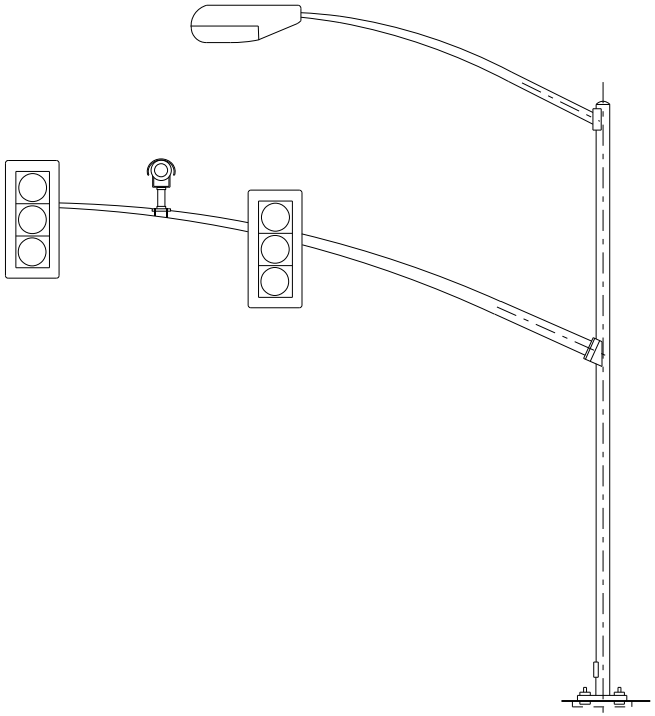

CAMERA MOUNTED ON TYPES F, Q AND R POLES
TYPICAL VIDEO DETECTION CAMERA INSTALLATION

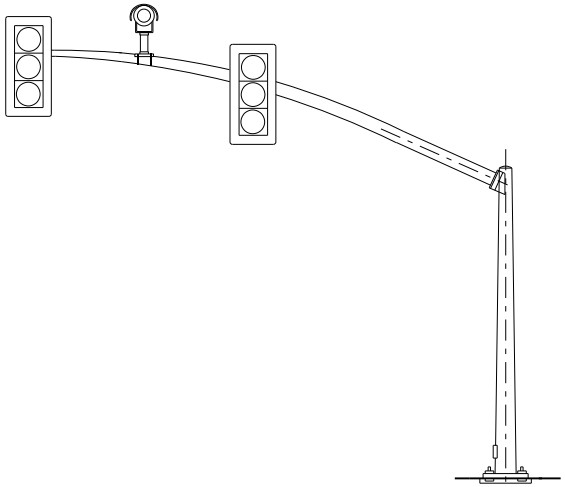

CAMERA MOUNTED ON TYPES E, J AND K POLES
TYPICAL VIDEO DETECTION CAMERA INSTALLATION

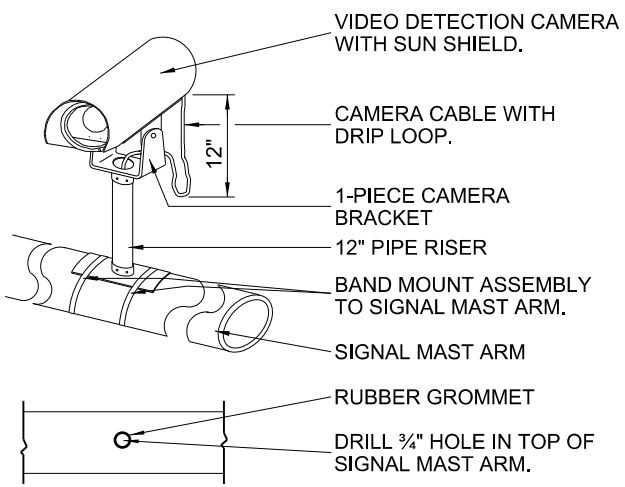

NOTES:

1. FOR CONSTRUCTION AND INSTALLATION REQUIREMENTS SEE SPECIFICATION SECTIONS 470 AND 473.
2. VIDEO DETECTION CABLE SHALL BE ONE CONTINOUS LENGTH FROM THE CAMERA TO THE CONTROLLER CABINET. THE CABLE LENGTH SHALL INCLUDE A 12" DRIP LOOP AT THE CAMERA INSTALLATION AND A MINIMUM OF AN EXTRA SIX FEET (6') LOCATED AT THE HAND HOLE NEAR THE BASE OF THE SIGNAL POLE.
3. PLACEMENT OF THE CAMERAS SHALL BE APPROVED BY THE TRAFFIC ENGINEER PRIOR TO INSTALLATION. VIDEO CAMERAS MAY BE PLACED NEXT TO FIRE PRE-EMPTION SENSORS, BETWEEN SIGNAL HEADS.
4. CAMERA MOUNTING HARDWARE SHALL BE PELCO CAMERA MOUNT SH-0509-12 OR APPROVED EQUAL.

MARICOPA COUNTY DEPARTMENT OF TRANSPORTATION	VIDEO DETECTION CAMERA INSTALLATION	DATE:	DETAIL NO.
STANDARD DETAIL		09/10/2016	4755

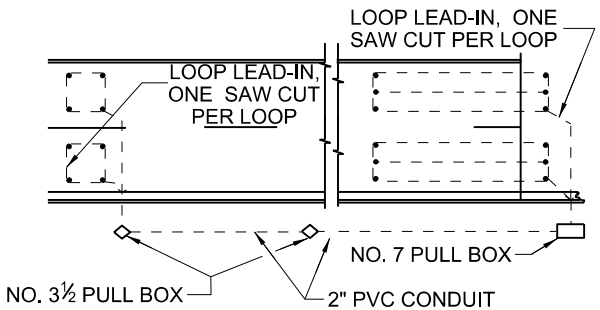

TYPICAL LOOP LAYOUT

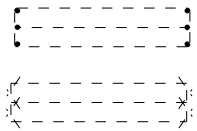

CALL LOOP PLAN SYMBOLS

ADVANCE LOOP PLAN SYMBOLS

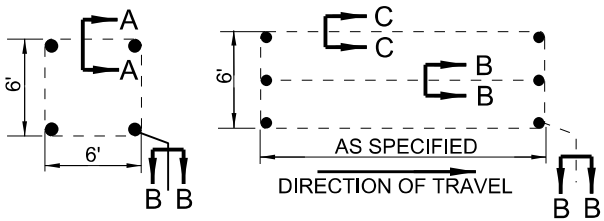

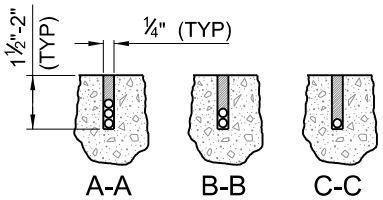

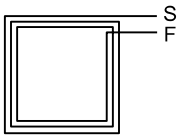

6'x6' LOOP

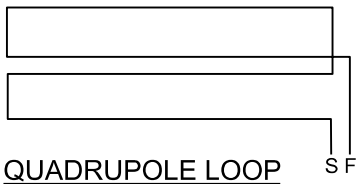

QUADRUPOLE LOOP

LOOP WIRING DETAILS

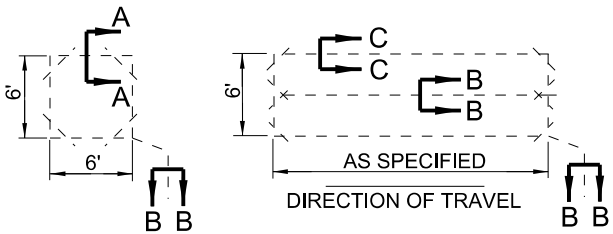

SAW CUT DETAILS

NOTES:

1. FOR MATERIALS AND INSTALLATION SPECIFICATIONS SEE SECTION 473.
2. WIRE QUADRUPOLE LOOP IN 1-2-1 CONFIGURATION UNLESS OTHERWISE SPECIFIED.
3. 6'x 6' LOOPS TO BE 3-TURN UNLESS OTHERWISE SPECIFIED.
4. LOCATE LOOPS AND PULL BOXES PER TRAFFIC SIGNAL PLANS.
5. CORE DRILL TURN POINTS, WITH A 2½" DIAMETER AND AT A FULL DEPTH OF SAW CUT OR SAWCUT AT 45° ANGLES. OBTAIN CONTINUOUS SAW CUT AT FULL DEPTH THROUGH ALL TURN POINTS.
6. IDENTIFY START (S) AND FINISH (F) WIRE IN PULL BOX FOR EACH LOOP.
7. FOR INSTALLATION OF PULL BOXES AND LEAD-INS FOR LOOPS SEE DETAILS 4758 AND 4759.

MARICOPA COUNTY DEPARTMENT OF TRANSPORTATION	LOOP INSTALLATION DETAILS	DATE:	DETAIL NO.
STANDARD DETAIL		1/01/2011	4757

ITEM	QTY.	DESCRIPTION
1	2	PULL BOX (SEE DETAIL 4711)
2	–	2" PVC ELECTRICAL CONDUIT, SCH. 40
3	–	SAW CUT FOR LOOP DETECTION SENSORS
4	–	LOOP SEALANT
5	–	LOOP DETECTION WIRES

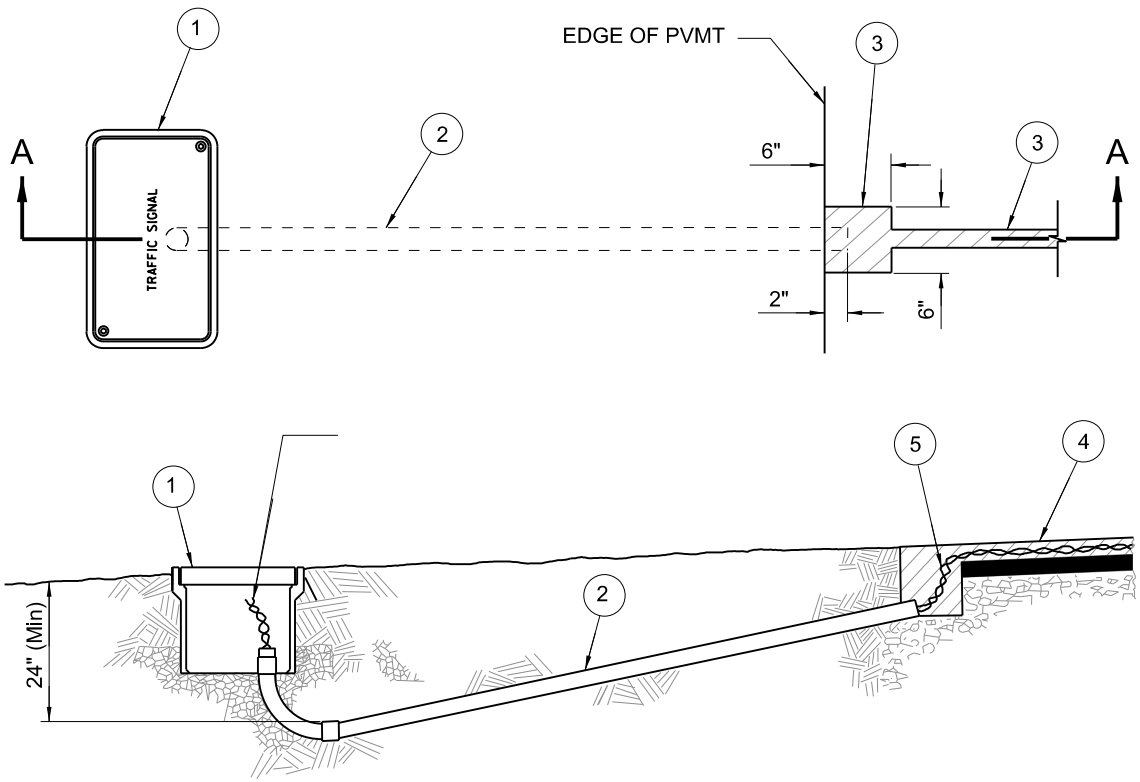

SECTION A-A

NOTES:

1. FOR CONSTRUCTION AND INSTALLATION SPECIFICATIONS SEE MCDOT SUPPLEMENT, SECTIONS 470 THRU 478.
2. FILL LOOP SAWCUT FROM THE TOP OF CONDUIT STUB-OUT TO THE PAVEMENT SURFACE WITH LOOP SEALANT.

MARICOPA COUNTY DEPARTMENT OF TRANSPORTATION	CONDUIT STUB-OUT DETAIL WITHOUT CURB & GUTTER	DATE:	DETAIL NO.
STANDARD DETAIL		04/01/2009	4758

ITEM	QTY.	DESCRIPTION
1	1	PULL BOX (SEE DETAIL 4711)
2	–	2" PVC ELECTRICAL CONDUIT, SCH. 40
3	–	CURB & GUTTER
4	–	SAW CUT FOR LOOP DETECTION SENSORS
5	–	LOOP SEALANT
6	–	LOOP DETECTION WIRES (SEE NOTE 4)

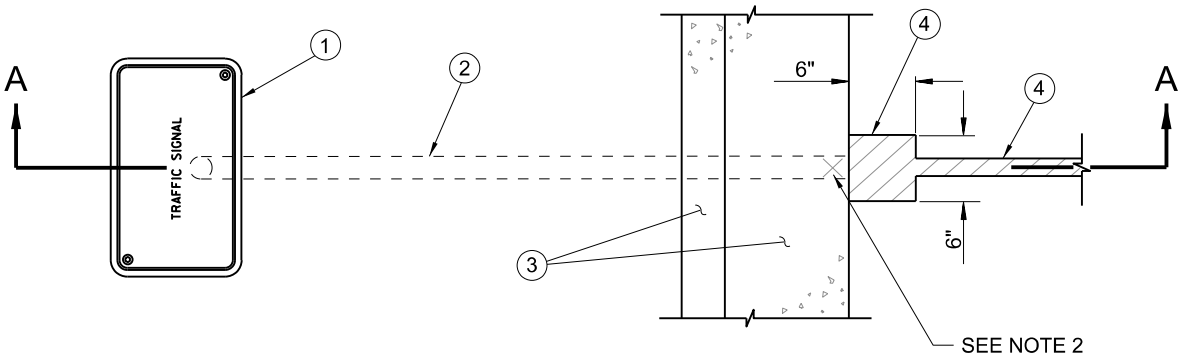

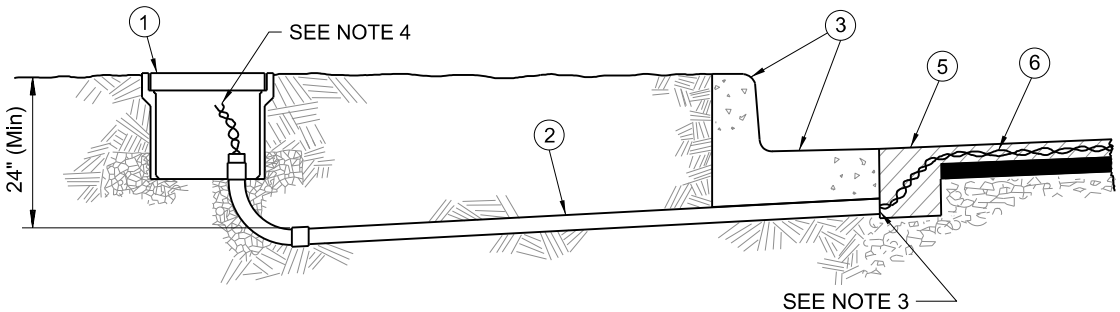

SECTION A-A

NOTES:

1. FOR CONSTRUCTION AND INSTALLATION SPECIFICATIONS SEE MCDOT SUPPLEMENT, SECTIONS 470 THRU 478.
2. CHISEL 'X' MARK ON LIP OF GUTTER TO MARK END OF CONDUIT LOCATION.
3. END OF PVC TO BE CUT FLUSH WITH GUTTER.
4. COIL 2' MIN. OF LOOP WIRE IN PULL BOX.
5. FILL LOOP SAWCUT FROM THE TOP OF CONDUIT STUB-OUT TO THE PAVEMENT SURFACE WITH LOOP SEALANT.

MARICOPA COUNTY DEPARTMENT OF TRANSPORTATION	CONDUIT STUB-OUT DETAIL WITH CURB & GUTTER	DATE:	DETAIL NO.
STANDARD DETAIL		04/01/2009	4759

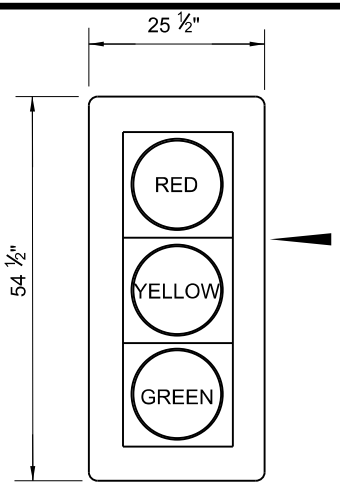

TYPE 'F' SIGNAL FACES

PLAN SYMBOL

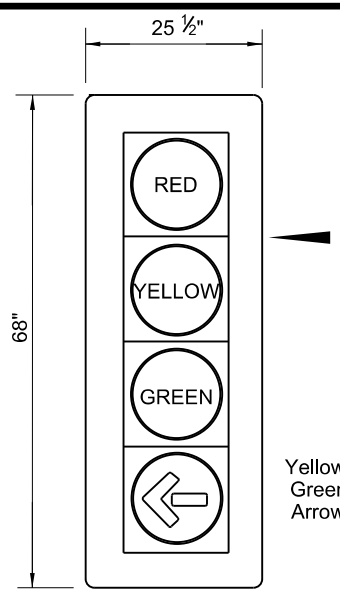

TYPE 'G' SIGNAL FACES

PLAN SYMBOL

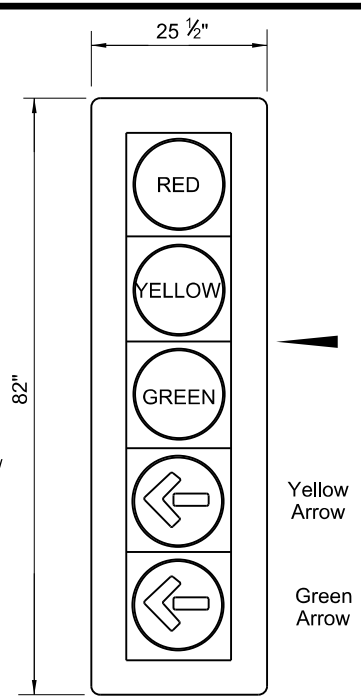

TYPE 'Q' SIGNAL FACES

PLAN SYMBOL

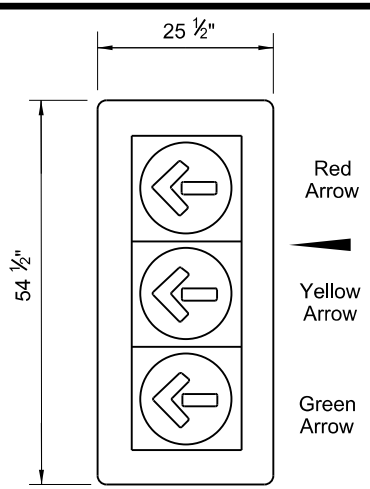

TYPE 'R' SIGNAL FACES

PLAN SYMBOL

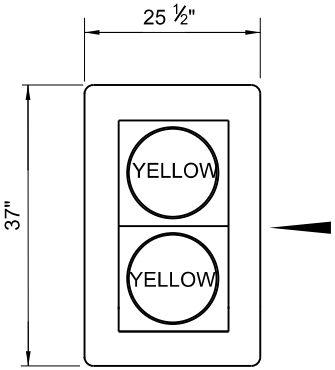

TYPE 'E' SIGNAL FACE FLASHER

PLAN SYMBOL

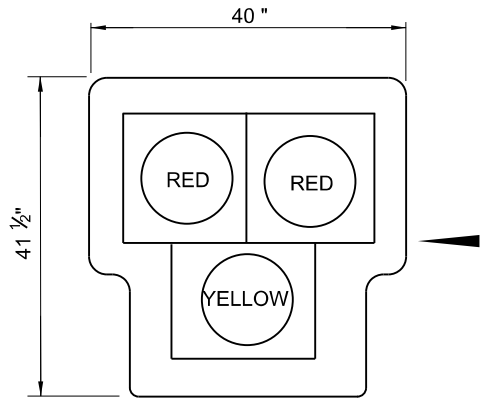

TYPE 'F' MODIFIED SIGNAL FACE

PLAN SYMBOL

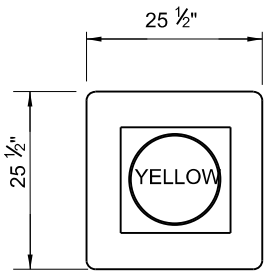

TYPE 'D' SIGNAL FACE FLASHER

PLAN SYMBOL

NOTES:

1. ALL DIMENSIONS SHOWN ARE NOMINAL.
2. ◄ DENOTES LOCATION OF ELEVATOR PLUMBIZER FOR MAST ARM INSTALLATIONS.
3. ALL SIGNAL ARRANGEMENTS SHALL BE FURNISHED WITH LOUVERED BACKPLATES.
4. ALL INDICATIONS AS PER THE MCDOT SUPPLEMENT, SECTIONS 470-478.

MARICOPA COUNTY DEPARTMENT OF TRANSPORTATION	STANDARD SIGNAL FACES	DATE:	DETAIL NO.
STANDARD DETAIL		10/01/2015	4773

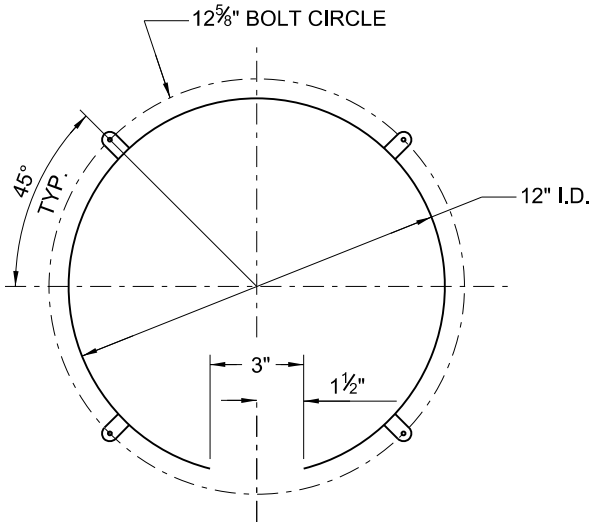

12" UNIT VISOR
TUNNEL TYPE

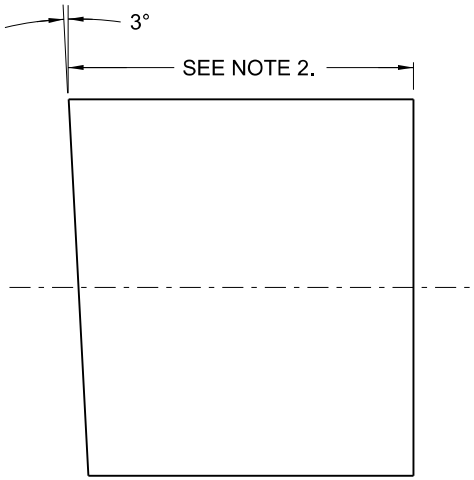

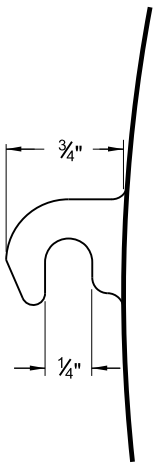

TOP VIEW
TYPICAL VISOR
ATTACHING TAB

NOTES:

1. ALL MATERIALS AND CONSTRUCTION SHALL CONFORM TO THE REQUIREMENTS OF THE MCDOT SUPPLEMENT, SECTIONS 470 THRU 478.
2. VISORS SHALL BE 12" LONG, UNLESS SPECIFIED OTHERWISE.
3. THE VISOR SHALL BE ATTACHED TO THE SIGNAL HOUSING EITHER WITH TABS AS SHOWN OR WITH THE VISOR PROJECTING INSIDE THE SIGNAL HOUSING ALONG THE EDGE OF THE SIGNAL LENS AND SECURED IN PLACE WITH FOUR SCREWS TAPPED INTO THE SIGNAL HOUSING.

MARICOPA COUNTY DEPARTMENT OF TRANSPORTATION	SIGNAL HEAD VISOR	DATE:	DETAIL NO.
STANDARD DETAIL		04/01/2009	4774

ITEM	QTY.	DESCRIPTION
1	1	POLE PLATE (See Detail 4785)
2	4	BOLTS-½" x 20 x 1½"
3	1	1 1/2 " x 12" NIPPLE
4	2	1½" ELBOW (See Detail 4788)
5	2	1 ½" LOCK NIPPLE
6	1	NEOPRENE WASHER
7	1	WASHER, GALVANIZED
8	-	SIGNAL POLE SHAFT
9	1	¾" CHASE NIPPLE (INSULATING BUSHING)

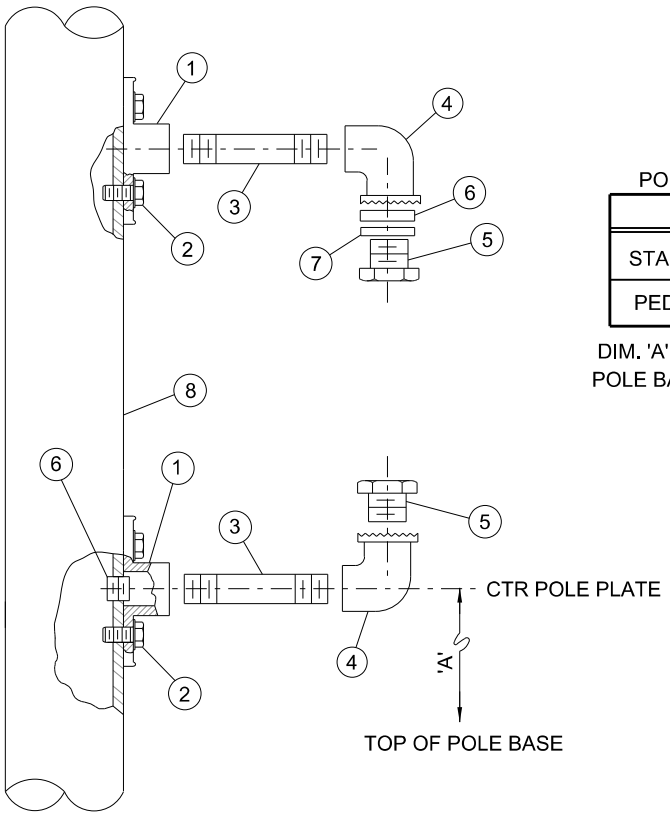

POLE DRILLING INFORMATION

ITEM	DIM.'A'
STANDARD SIGNAL	118"
PEDESTRIAN SIGNAL	87"

DIM. 'A' IS MEASURED FROM TOP OF POLE BASE TO CENTER OF BOTTOM POLE PLATE

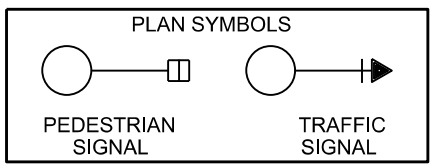

SIDE MOUNT DETAIL

NOTES:

1. SEE DETAIL 4773, FOR SIGNAL INDICATION COMBINATIONS.
2. SEE DETAIL 4785, FOR POLE PLATE DETAILS.

MARICOPA COUNTY DEPARTMENT OF TRANSPORTATION	SIDE MOUNT (TYPE XI) ASSEMBLY (VEHICLE & PEDESTRIAN)	DATE:	DETAIL NO.
STANDARD DETAIL		4/09	4775

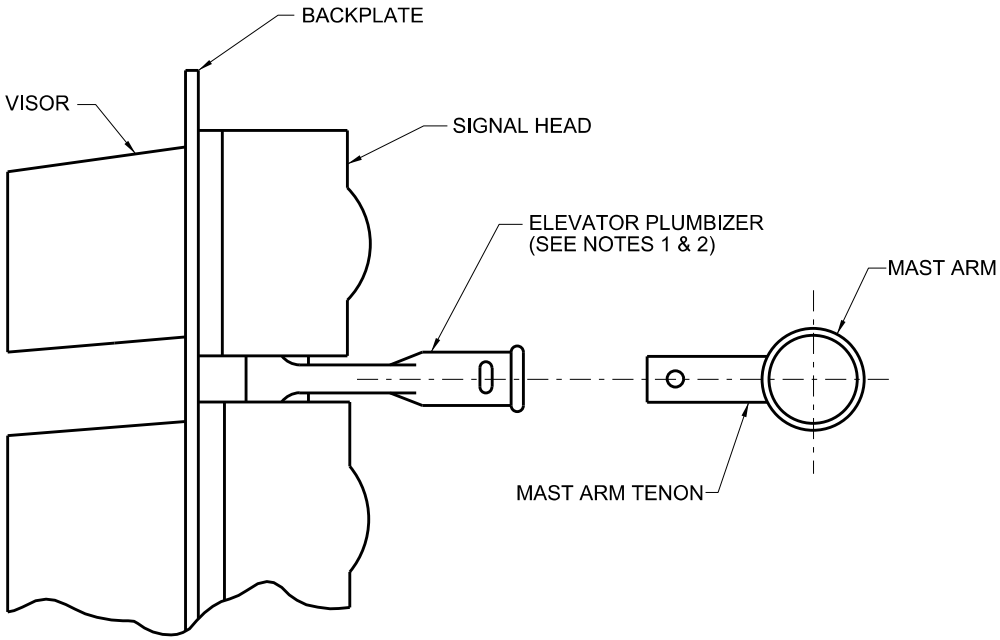

NOTES:

1. USE ⅜" x 4" BOLT WITH TWO (2) NUTS AND TWO (2) WASHERS (SUPPLIED WITH ELEVATED PLUMBIZER) TO ATTACH SIGNAL INDICATION. FOR PLUMBIZER SEE DETAIL 4778-2.

2. FOR LOCATION OF ELEVATOR PLUMBIZER FOR VARIOUS SIGNAL INDICATIONS. SEE DETAIL 4773.

MARICOPA COUNTY DEPARTMENT OF TRANSPORTATION	MAST ARM SIGNAL HEAD MOUNT (TYPE II)	DATE:	DETAIL NO.
STANDARD DETAIL		04/01/2009	4778-1

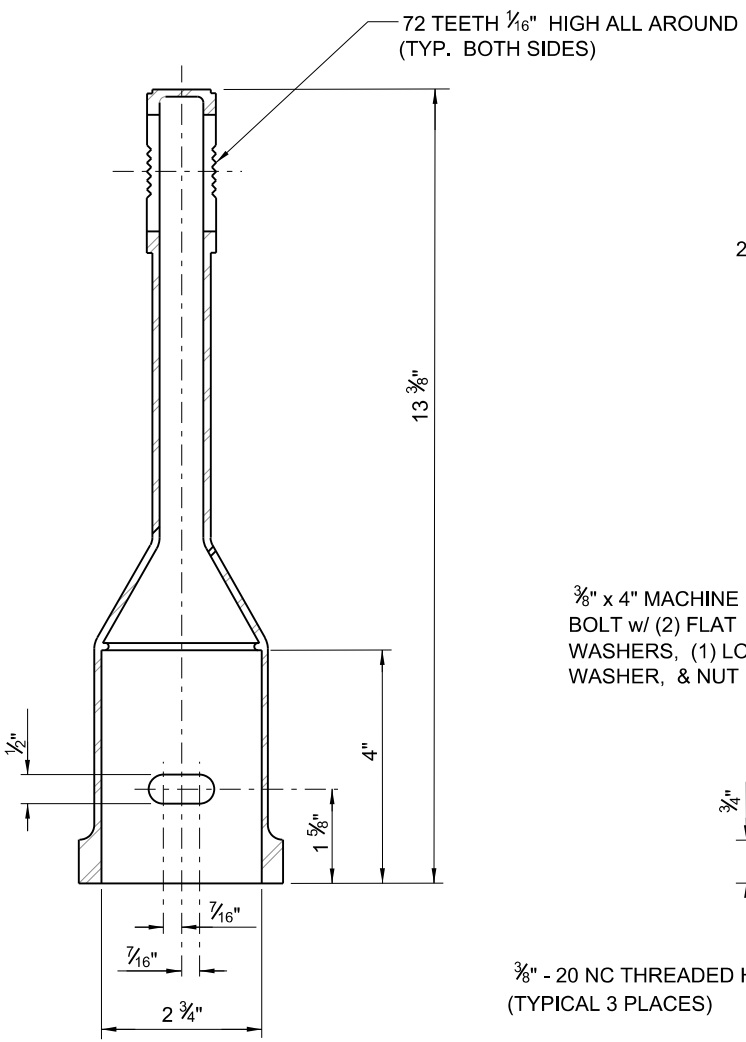

SECTION A-A

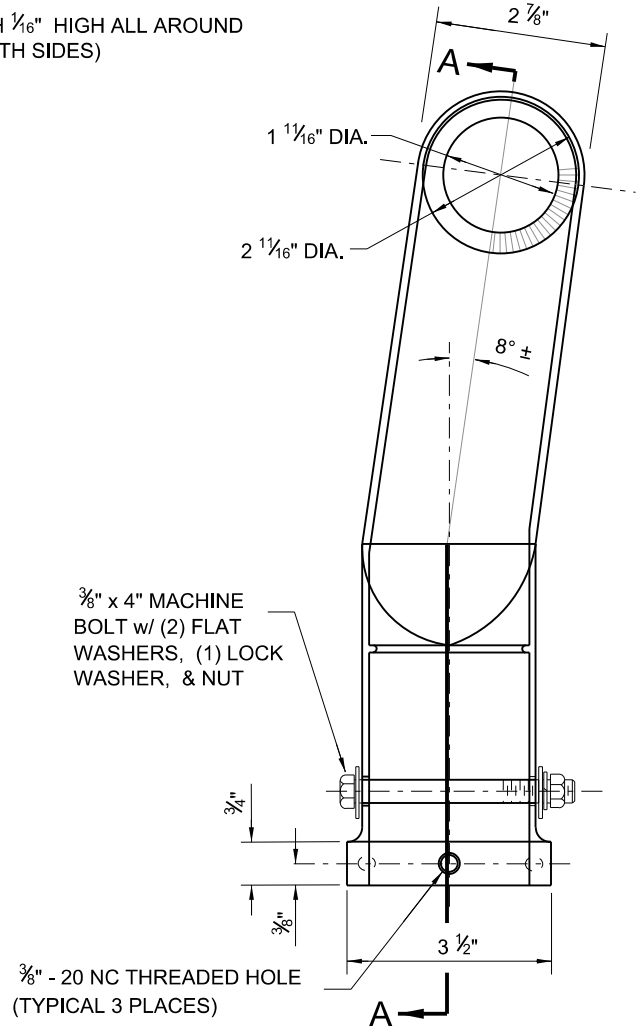

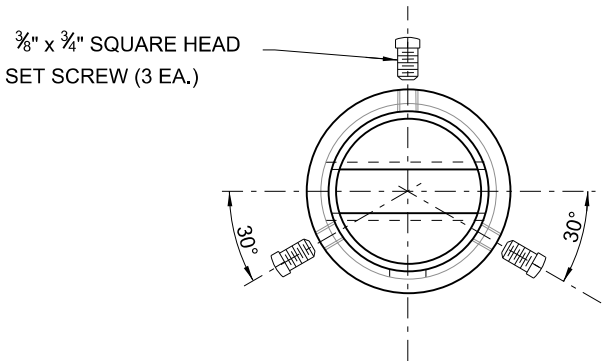

NOTES:

1. MATERIAL TO BE BRONZE OR ALUMINUM
2. FOR CONSTRUCTION SPECIFICATIONS SEE MCDOT SUPPLEMENT, SECTIONS 470 THRU 478.
3. PLUMBIZER TO BE PAINTED A FLAT BLACK

MARICOPA COUNTY DEPARTMENT OF TRANSPORTATION	ELEVATOR PLUMBIZER DETAIL	DATE:	DETAIL NO.
STANDARD DETAIL		4/09	4778-2

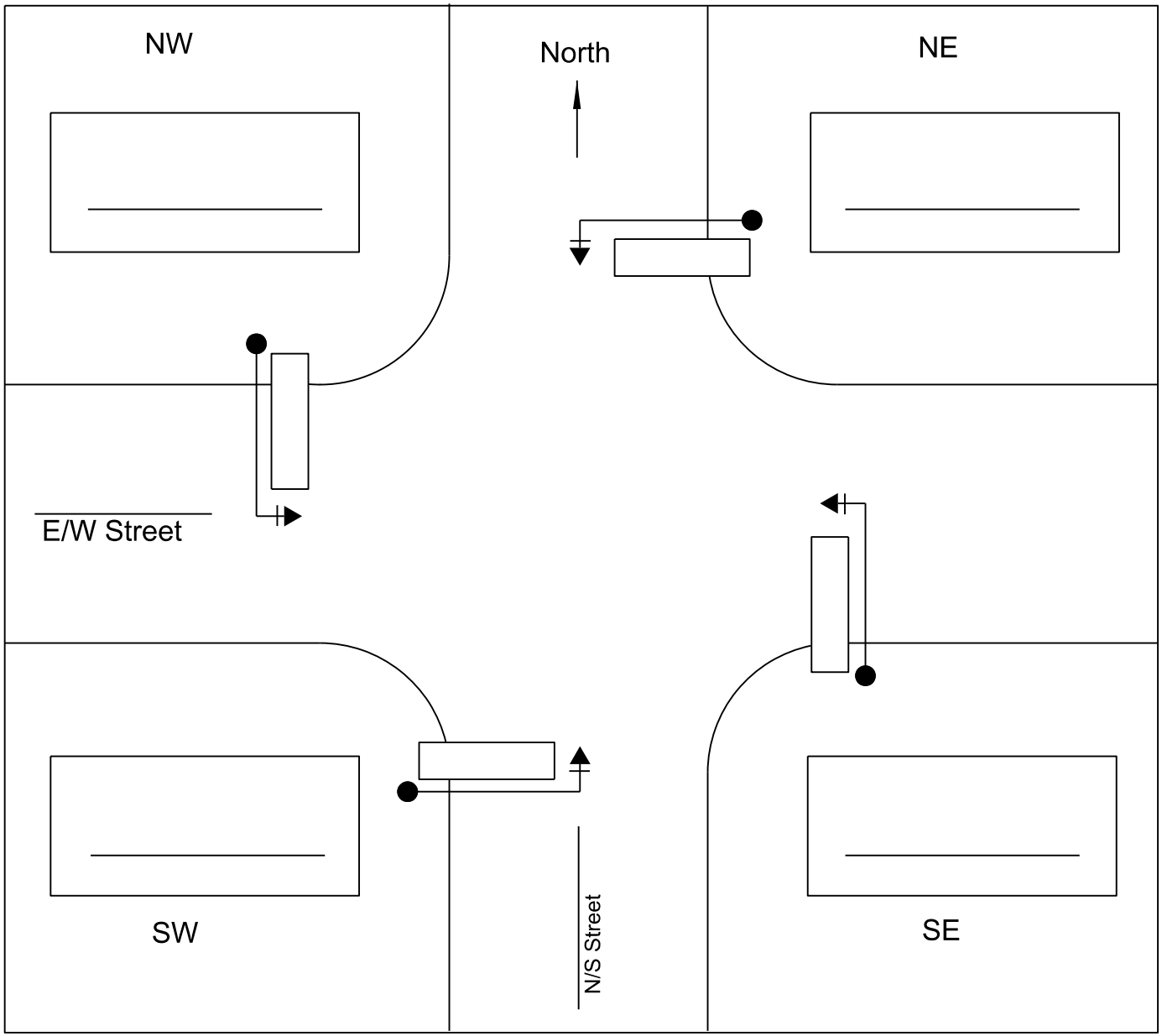

NOTES:

1. NON-ILLUMINATED METRO STREET NAME SIGNS SHALL BE FURNISHED AND INSTALLED IN ACCORDANCE WITH THE MCDOT SUPPLEMENT SECTION 465 AND THE SIGNAL AND SIGNING PLANS.
2. SEE DETAILS 4780-2, 4780-3, 4780-4 and 4780-5.
3. SEE PROJECT PLANS AND SPECIAL PROVISIONS FOR INTERNALLY-ILLUMINATED METRO STREET NAME SIGNS.

MARICOPA COUNTY DEPARTMENT OF TRANSPORTATION	METRO STREET SIGN LAYOUT SHEET INSTALLATION ON SIGNAL POLES	DATE:	DETAIL NO.
STANDARD DETAIL		10/2012	4780-1

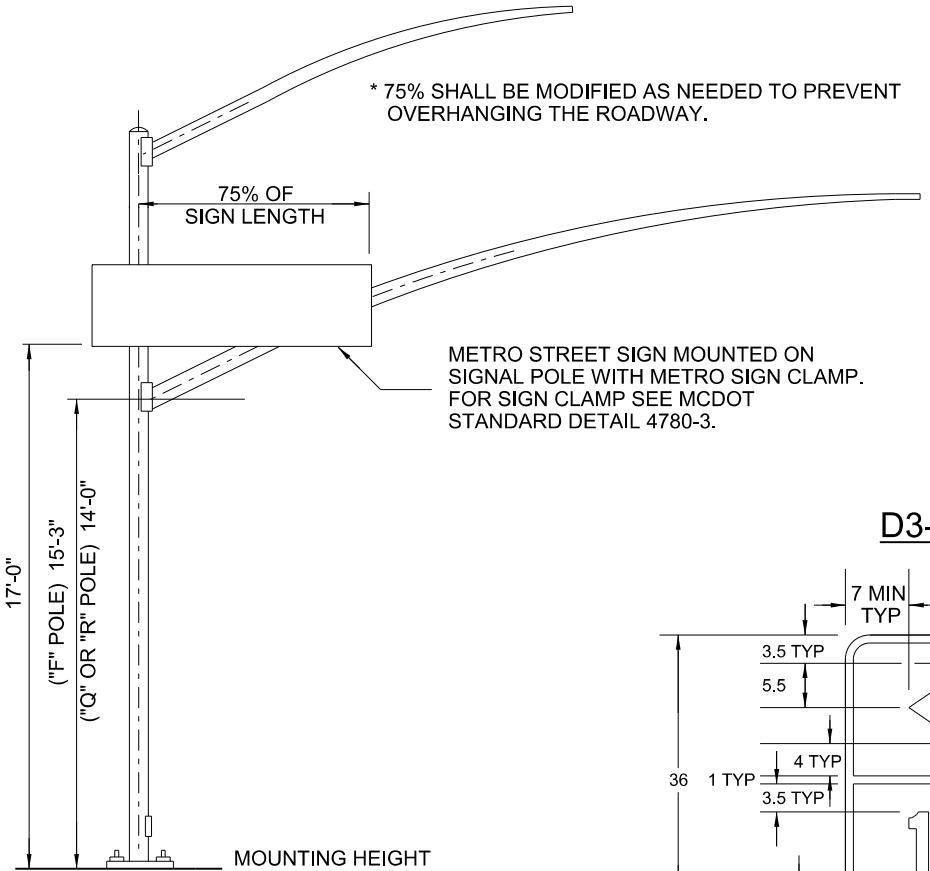

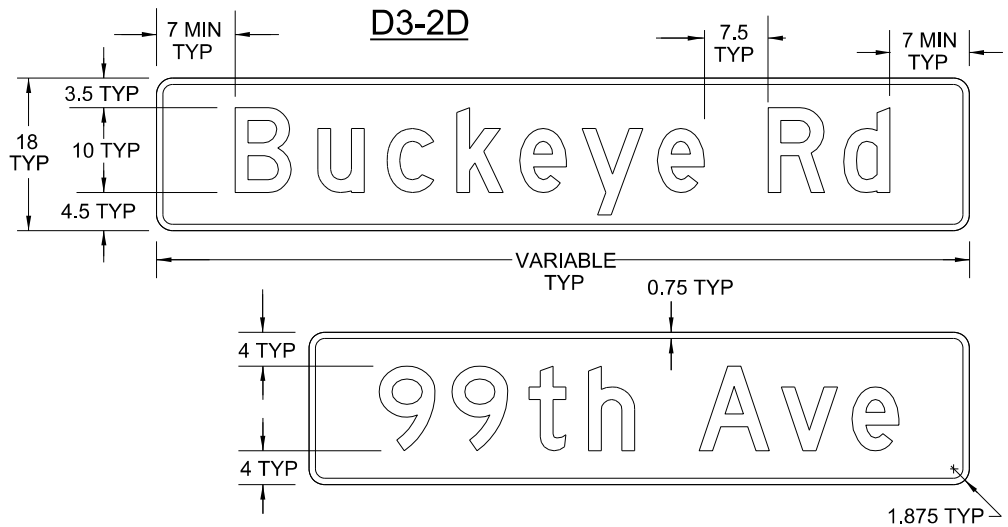

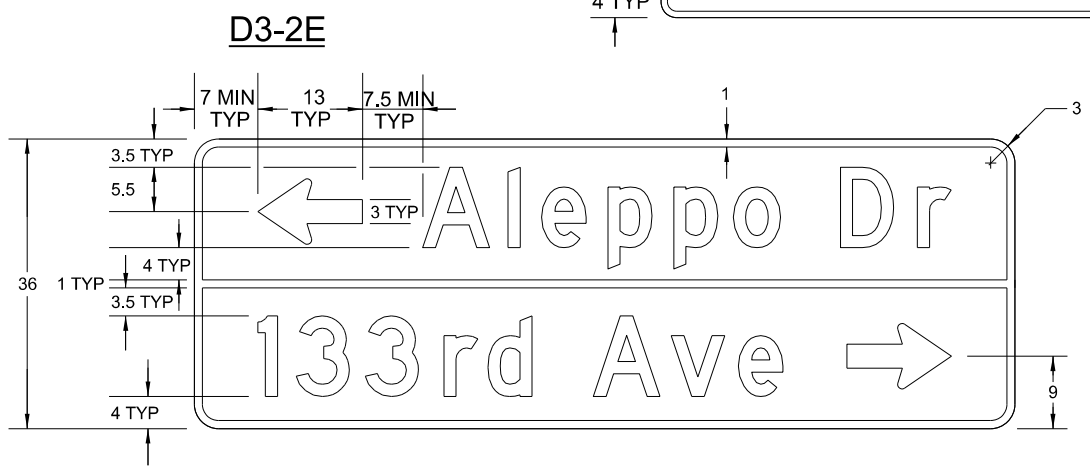

NOTES:

1. DIAMOND GRADE (TYPE IX OR TYPE XI) SHEETING SHALL BE USED FOR ALL LETTERS AND BACKGROUND.
2. SIGN LENGTHS SHALL BE DETERMINED BY THE NUMBER OF LETTERS AND SPACING REQUIREMENTS.
3. ALL SIGNS SHALL BE FABRICATED WITH 10 INCH WHITE UPPER-CASE AND LOWER-CASE LETTERS.
4. LETTERING SHALL BE PLACED ON A GREEN BACKGROUND USING SERIES "D" LETTERING (STANDARD HIGHWAY SIGNS AS PUBLISHED BY FHWA).
5. WHEN THERE IS A DECENDING LETTER TAIL IN A ROAD NAME WITHIN A D3-2D THE ENTIRE NAME IS SHIFTED UP WITHIN THE BLANK TO ALLOW SPACE FOR THE DECENDING LETTER. THE OFFSET TO THE INITIAL UPPER-CASE LETTER IS A SET DISTANCE WITHIN A 18" HIGH BLANK OF 4.5 INCHES FROM THE BOTTOM OF THE BLANK AND 3.5 INCHES FROM THE TOP OF THE BLANK.
   ALL OTHER ROAD NAMES SHALL BE CENTERED VERTICALLY WITHIN THE BLANK.
6. SEE LATEST VERSION OF STANDARD HIGHWAY SIGNS MANUAL FOR STANDARD ARROW DETAILS.

(ALL DIMENSIONS ARE IN INCHES)

MARICOPA COUNTY DEPARTMENT OF TRANSPORTATION	METRO STREET SIGN LAYOUT AND INSTALLATION ON SIGNAL POLES	DATE:	DETAIL NO.
STANDARD DETAIL		12/2016	4780-2

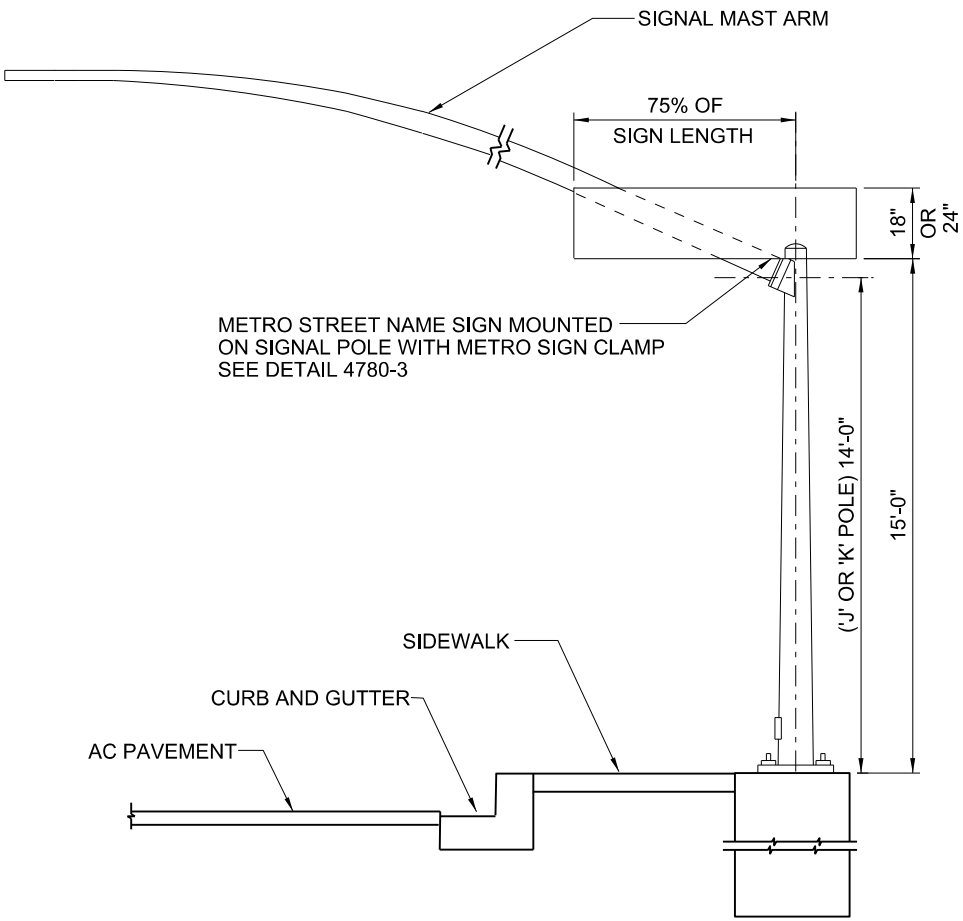

NOTES:

1. WHERE CURB AND GUTTER IS LOCATED, METRO SIGN SHALL NOT OVERHANG ABOVE OUTSIDE TRAVEL LANE, (EDGE OF GUTTER LIP).
2. WHERE EDGE OF PAVEMENT IS LOCATED, METRO SIGN SHALL NOT OVERHANG ABOVE OUTSIDE TRAVEL LANE, (EDGE OF PAVEMENT).
3. TO OBTAIN PROPER CLEARANCE BETWEEN METRO SIGNS AND TRAVEL LANES, SIGNAL POLES AND FOUNDATIONS MAYBE LOCATED AWAY FROM ROADWAY. RANGE UP TO 5', PRIOR TO INSTALLING LONGER SIGNAL MAST ARM LENGTH.

MARICOPA COUNTY DEPARTMENT OF TRANSPORTATION	METRO STREET NAME SIGN MOUNTED ON TYPES "J" OR "K" SIGNAL POLES	DATE:	DETAIL NO.
STANDARD DETAIL		4/2009	4780-4

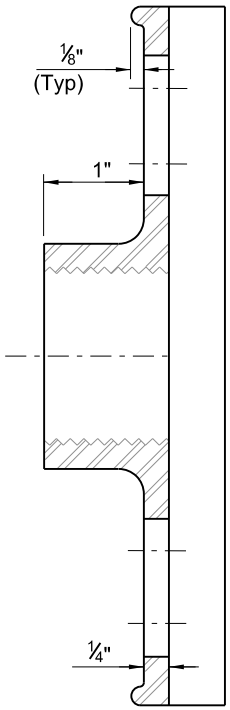

SECTION X-X

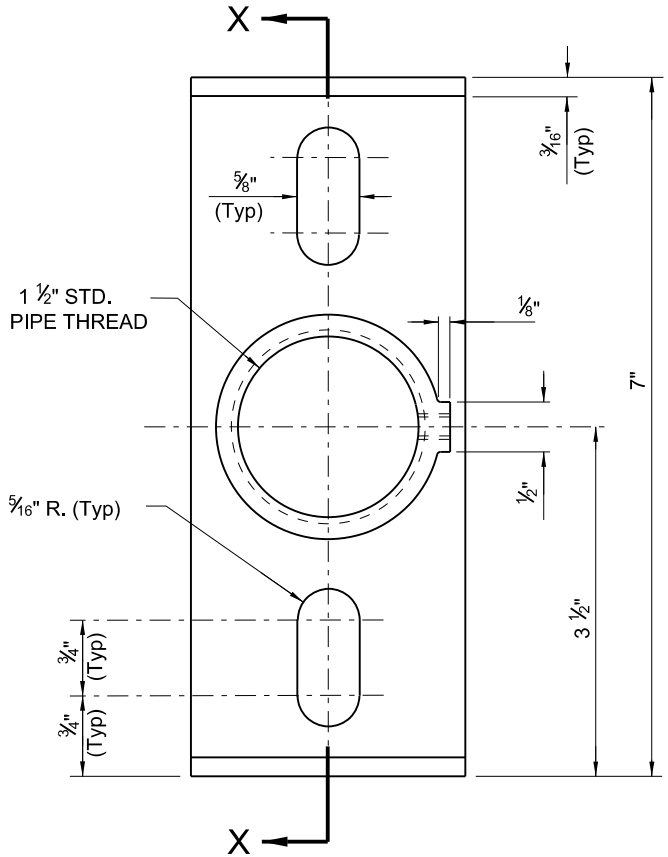

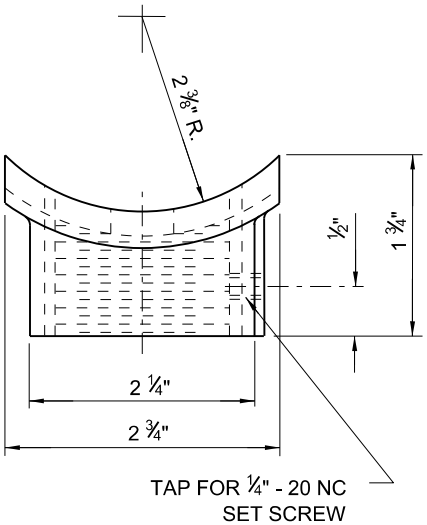

NOTES:

1. MATERIAL TO BE ALUMINUM.
2. POLE PLATE TO BE PAINTED A FLAT BLACK.
3. ALL FILLETS ARE ⅛" RAD.

MARICOPA COUNTY DEPARTMENT OF TRANSPORTATION	POLE PLATE	DATE:	DETAIL NO.
STANDARD DETAIL		4/01/2009	4785

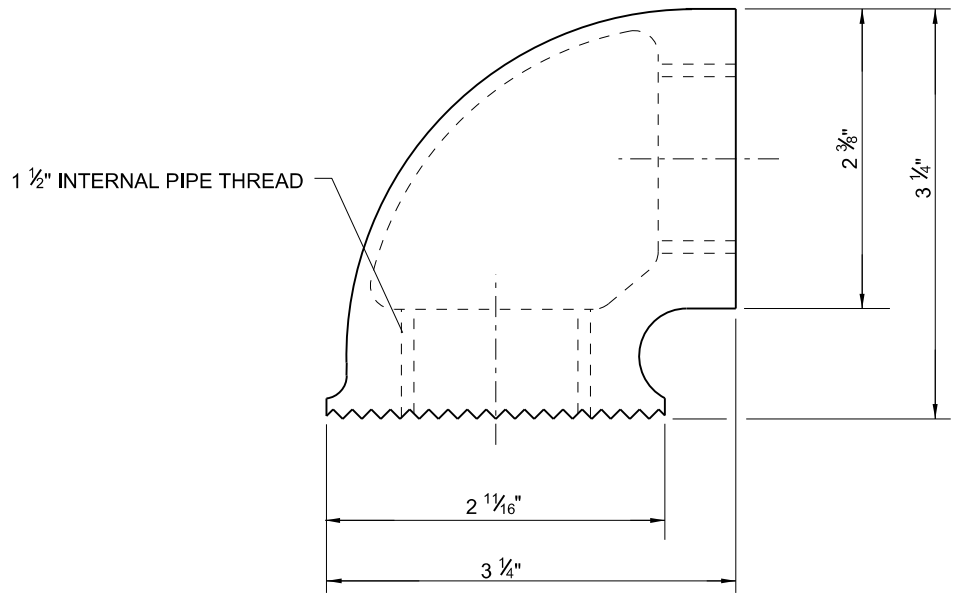

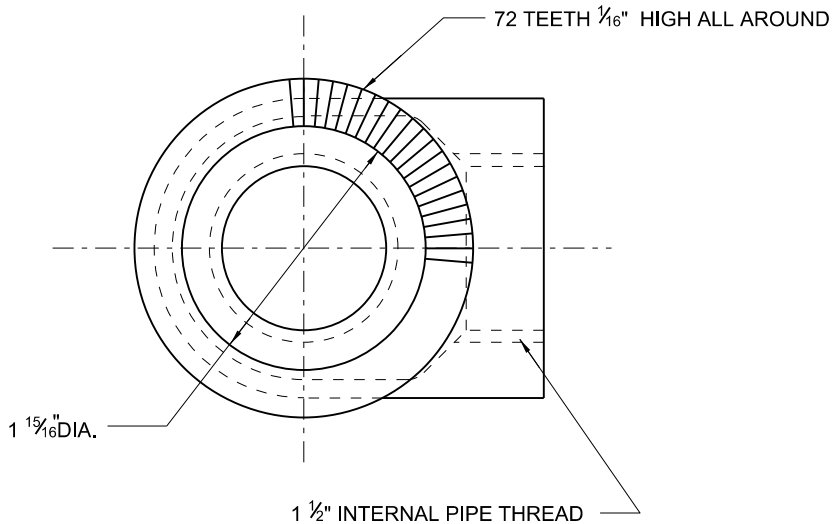

NOTES:

1. MATERIAL TO BE FERROUS.
2. ELBOW TO BE PAINTED A FLAT BLACK.

MARICOPA COUNTY DEPARTMENT OF TRANSPORTATION	ELBOW	DATE:	DETAIL NO.
STANDARD DETAIL		04/01/2009	4788

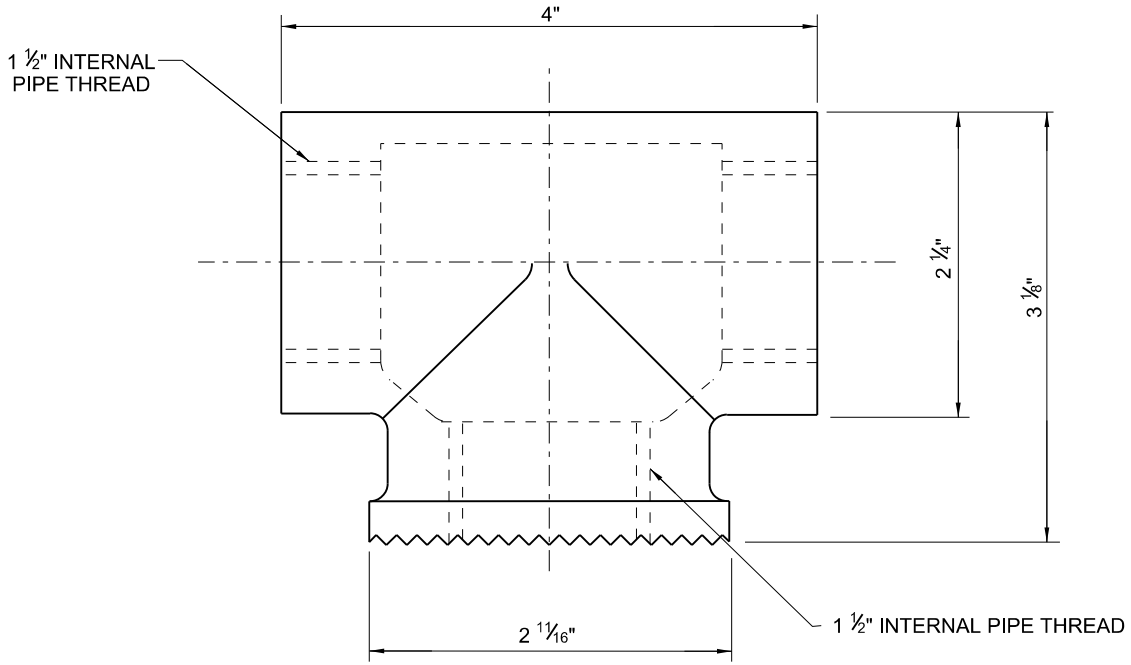

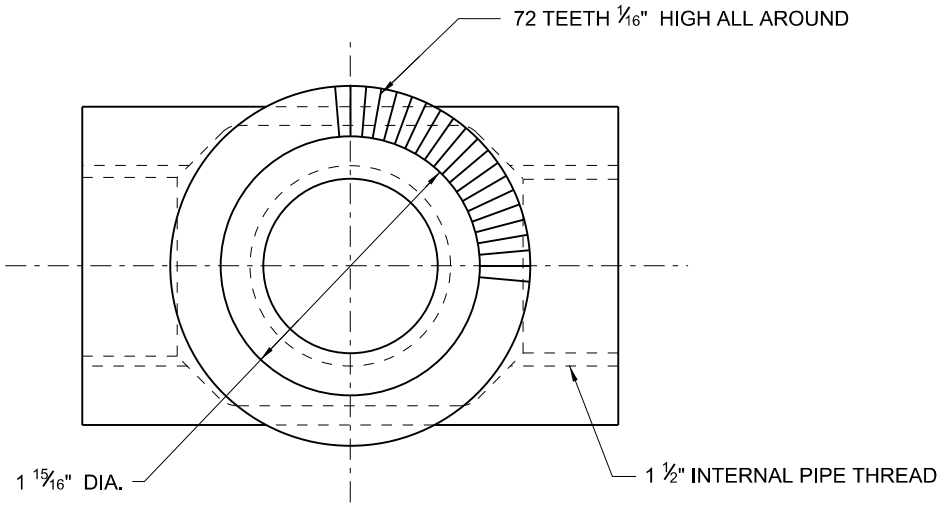

NOTES:

1. MATERIAL TO BE FERROUS.
2. TEE TO BE PAINTED A FLAT BLACK.

MARICOPA COUNTY DEPARTMENT OF TRANSPORTATION	TEE	DATE:	DETAIL NO.
STANDARD DETAIL		04/01/2009	4789

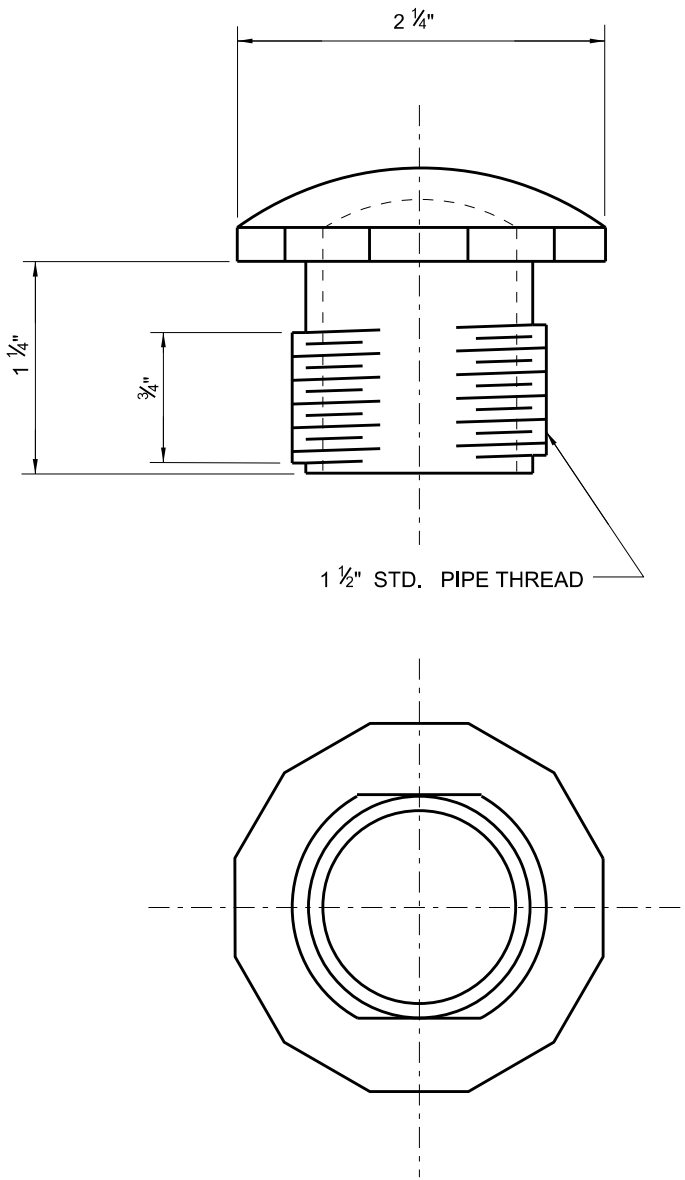

NOTES:

1. MATERIAL TO BE ALUMINUM.
2. CAP TO BE PAINTED A FLAT BLACK.

MARICOPA COUNTY DEPARTMENT OF TRANSPORTATION	ORNAMENTAL CAP	DATE:	DETAIL NO.
STANDARD DETAIL		04/01/2009	4791

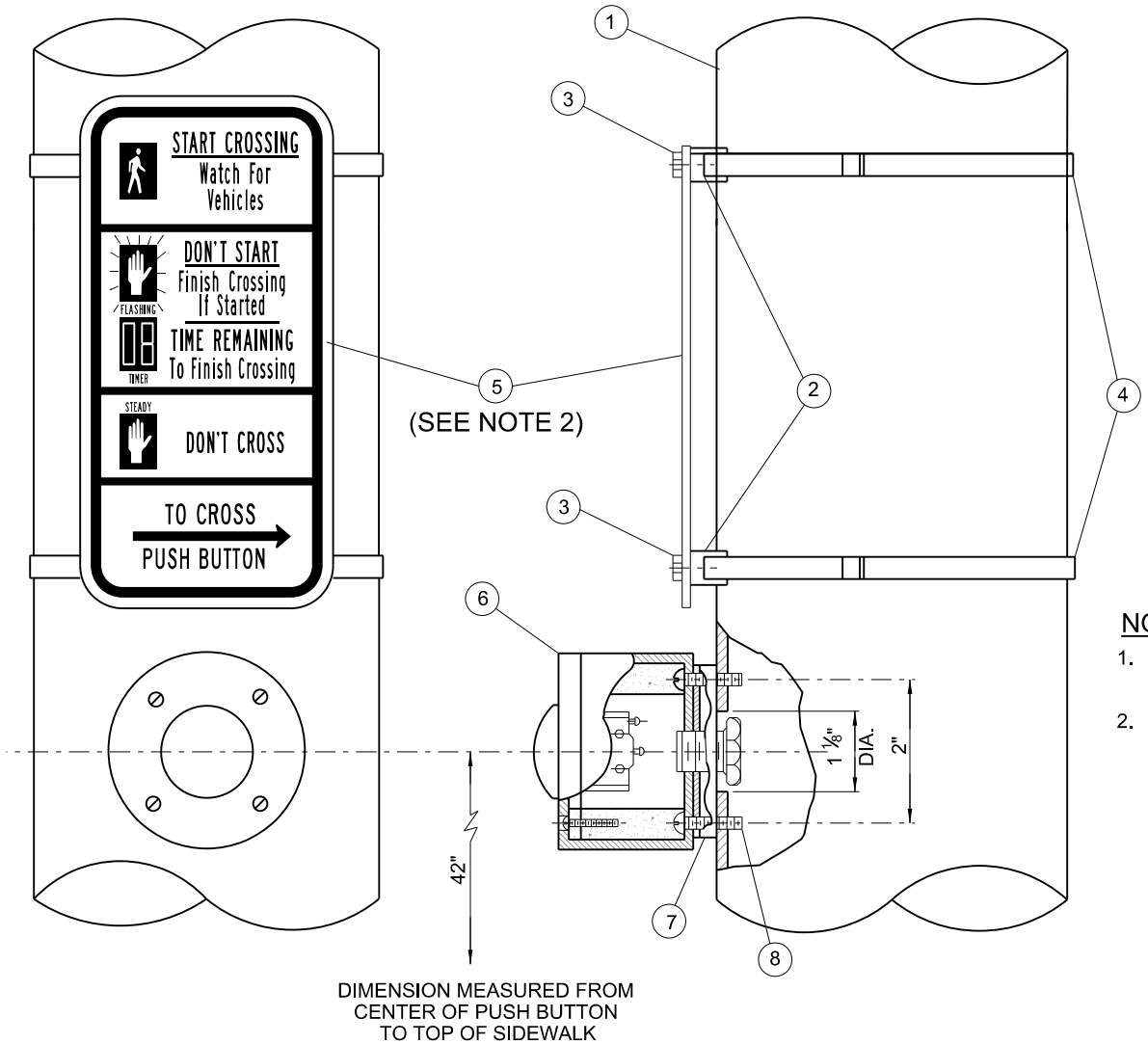

ITEM	QTY.	DESCRIPTION
1	-	SIGNAL POLE SHAFT
2	2	STAINLESS STEEL MINI-BRACKET
3	2	5/16"-24 x 1/2" LONG STAINLESS STEEL BOLT
4	2	1/2" STAINLESS STEEL BAND W/BUCKLE, (BAND-IT TYPE 201 OR EQUAL)
5	1	6" x 12" PEDESTRIAN PUSH-BUTTON SIGN. (SEE MCDOT TRAFFIC SIGN MANUAL FOR SIGN CODES R10-3e, R10-3eL, R10-3eR OR R10-3eB)
6	1	3" DIA. ROUND PED. PUSH-BUTTON, PAINTED GLOSS BLACK
7	1	POLE CURVATURE MOUNTING ADAPTER
8	2	1/4"-20 x 1" LONG SLOTTED R.H. SCREW, DRILLED AND TAPPED

NOTES:

1. FOR INSTALLATION SPECIFICATIONS SEE MCDOT SUPPLEMENT, SECTION 473.
2. THE CONTROL FACE OF THE PEDESTRIAN PUSH BUTTON DETECTOR WITH SIGN SHALL BE INSTALLED PARALLEL TO THE DIRECTION OF THE CROSSWALK BY THE PEDESTRIAN PUSH BUTTON DETECTOR FOR CORRECT PUSH BUTTON SIGN, SEE TRAFFIC SIGNAL PLANS.

MARICOPA COUNTY DEPARTMENT OF TRANSPORTATION	TYPE PB PEDESTRIAN PUSH BUTTON MOUNT	DATE:	DETAIL NO.
STANDARD DETAIL		10/02/2015	4797-1

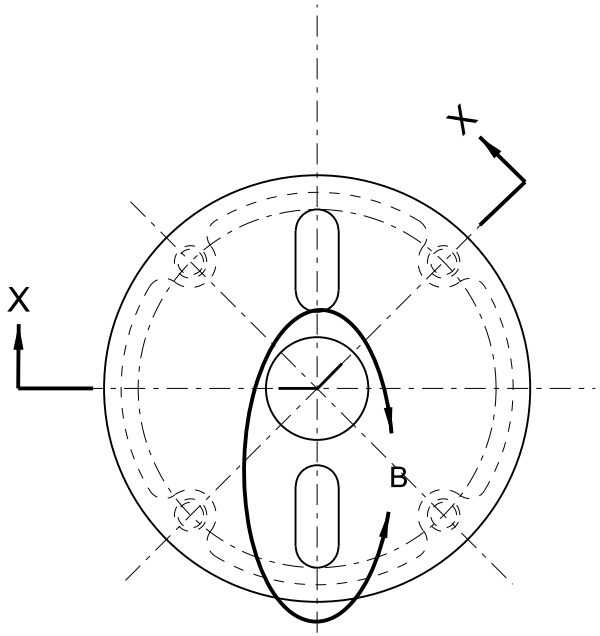

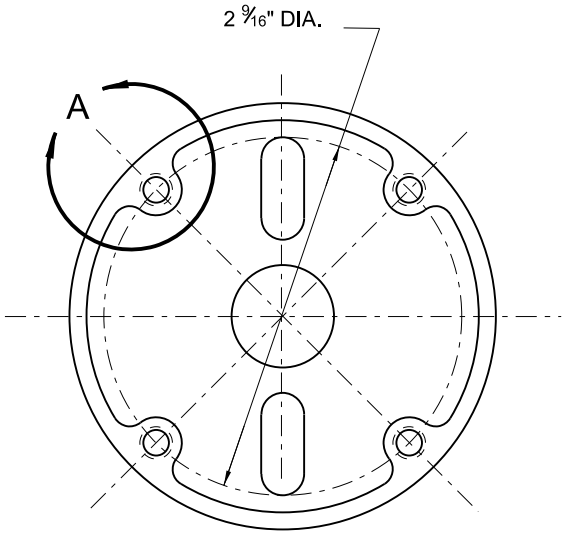

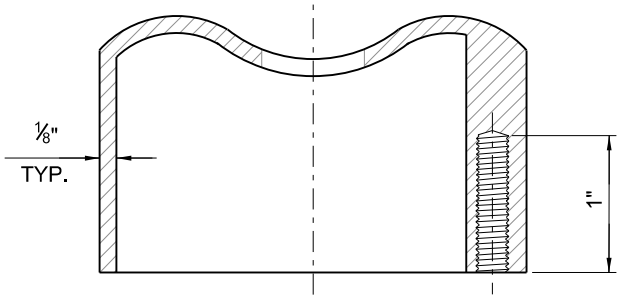

SECTION X-X

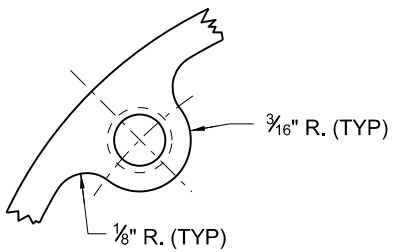

DETAIL A

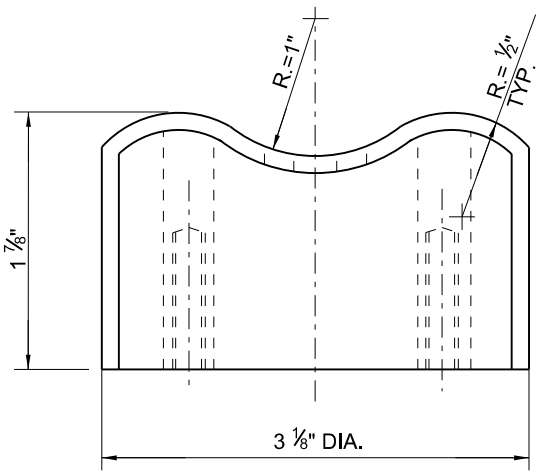

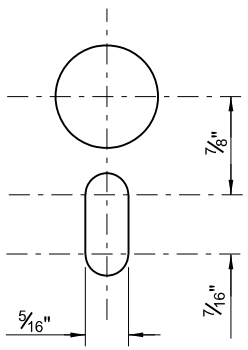

DETAIL B

NOTES:

1. MATERIAL TO BE ALUMINUM
2. HOUSING TO BE PAINTED A FLAT BLACK

MARICOPA COUNTY DEPARTMENT OF TRANSPORTATION	PEDESTRIAN PUSH BUTTON HOUSING	DATE:	DETAIL NO.
STANDARD DETAIL		4/09	4797-2

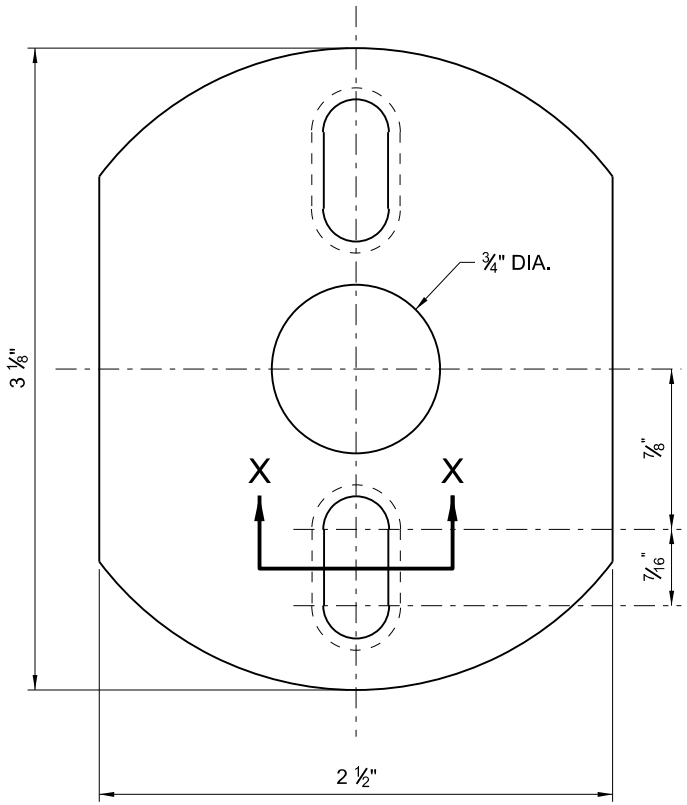

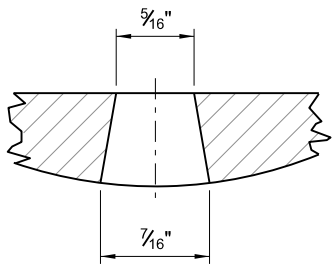

SECTION X-X

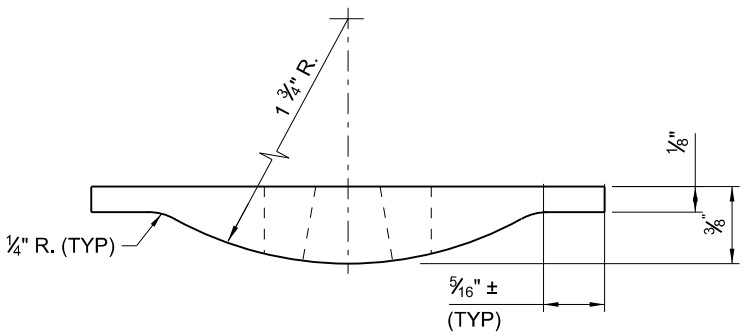

NOTES:

1. MATERIAL TO BE ALUMINUM
2. ADAPTOR TO BE PAINTED A FLAT BLACK

MARICOPA COUNTY DEPARTMENT OF TRANSPORTATION	PEDESTRIAN PUSH-BUTTON ADAPTOR PLATE	DATE:	DETAIL NO.
STANDARD DETAIL		04/01/2009	4797-3

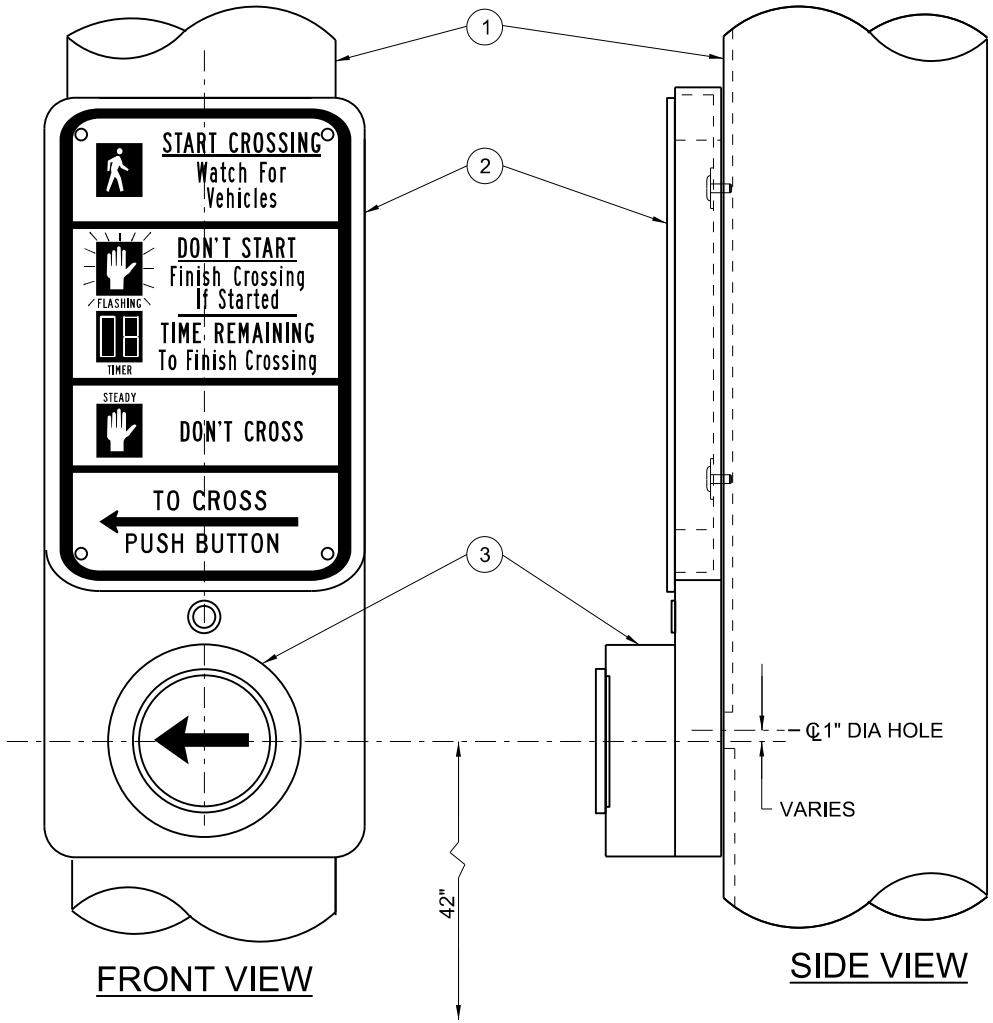

DIMENSION MEASURED FROM
CENTER OF PUSH BUTTON TO TOP OF SIDEWALK

ITEM	QTY.	DESCRIPTION
1	-	SIGNAL POLE
2	1	6" x 12" PEDESTRIAN PUSH BUTTON SIGN. (SEE MCDOT TRAFFIC SIGN MANUAL FOR SIGN CODES R10-3e, R10-3eL, R10-3eR, OR R10-3eB)
3	1	AUDIBLE PEDESTRIAN PUSH BUTTON STATION, BLACK HOUSING, 4-WIRE CABLE, ADA COMPLIANT BUTTON WITH TACTILE DIRECTIONAL ARROW, WATER PROOF-SPEAKER, AUDIBLE VOICE MESSAGING

1. FOR INSTALLATION SPECIFICATIONS SEE MCDOT SUPPLEMENT, SECTION 473.
2. SEE TRAFFIC SIGNAL PLANS FOR REQUIRED PUSH BUTTON SIGN.

MARICOPA COUNTY DEPARTMENT OF TRANSPORTATION	AUDIBLE PEDESTRIAN PUSH BUTTON STATION	DATE:	DETAIL NO.
STANDARD DETAIL		10/02/2015	4797-4

ITEM	QTY.	DESCRIPTION
1	1	METER (SUPPLIED BY UTILITY COMPANY)
2	1	SERVICE PEDESTAL / BATTERY BACKUP CABINET
3	-	2" PVC CONDUIT RUN
4	1	PVC CONDUIT SERVICE RUN (SIZE AS REQ.BY POWER CO)
5	1	NO. 5 PULL BOX (IF REQUIRED BY POWER COMPANY)
6	1	POWER COMPANY POLE

NOTES:

1. SEE PLANS FOR DIRECTION OF PVC CONDUIT RUNS.
2. POWER SOURCE MAY COME FROM PAD MOUNTED TYPE TRANSFORMER.
3. METER FACES TOWARD ROADWAY.

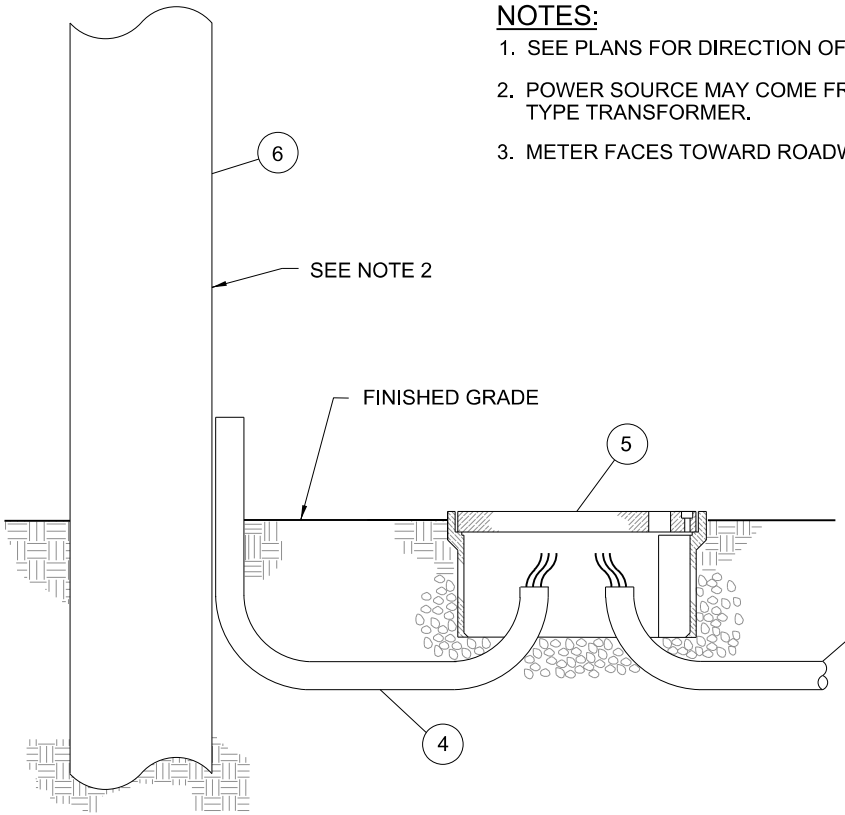

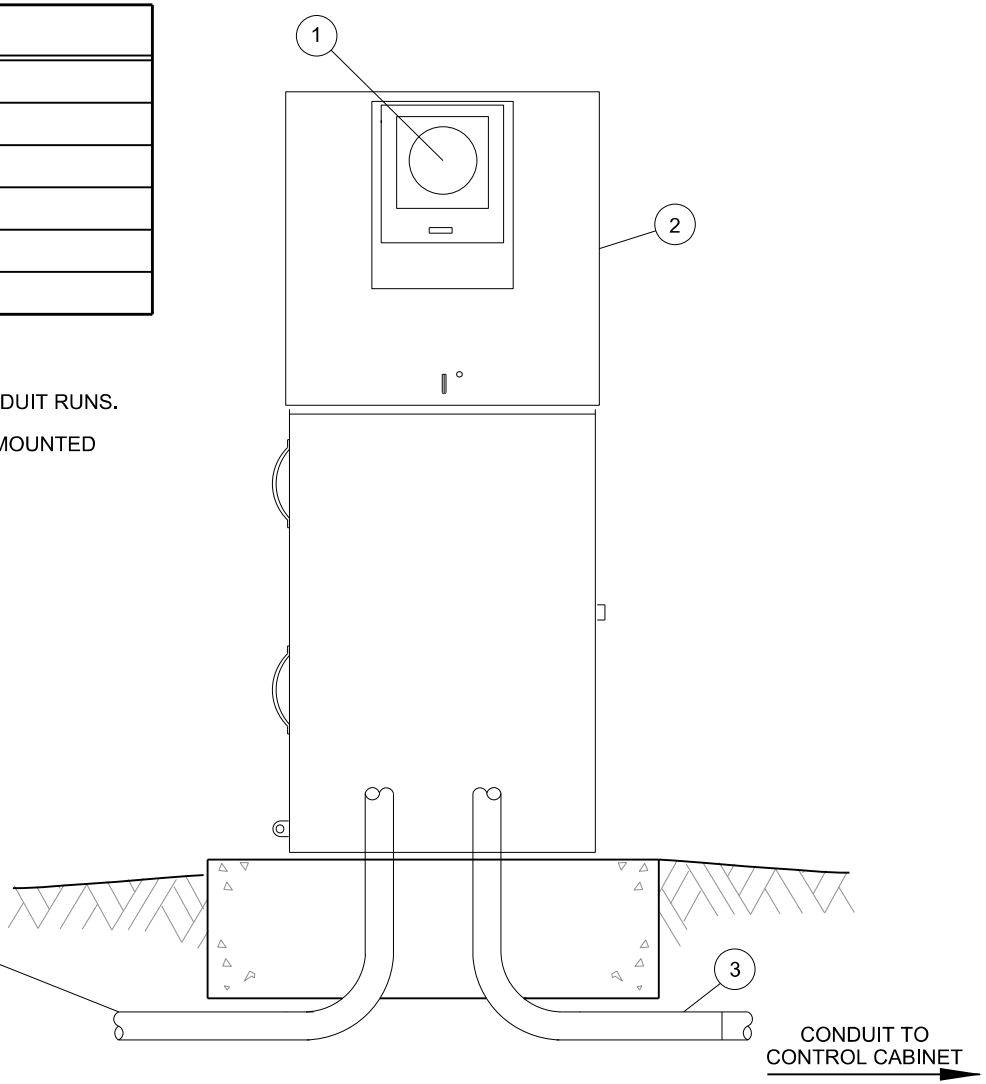

TYPE 5 (SERVICE)

MARICOPA COUNTY DEPARTMENT OF TRANSPORTATION	UNDERGROUND POWER SERVICE TO SERVICE PEDESTAL	DATE:	DETAIL NO.
STANDARD DETAIL		01/01/2011	4798

IMSA CABLE 19-1, #14 AWG, 2 CONDUCTOR

PEDESTRIAN PUSH BUTTON STATION	
BASIC COLOR	SIGNAL INDICATION
BLACK	PUSH BUTTON
WHITE	PUSH BUTTON COMMON

IMSA CABLE 19-1, #14 AWG, 4 CONDUCTOR

SIGNAL HEADS	
BASIC COLOR	SIGNAL INDICATION
RED	RED
BLACK	YELLOW
GREEN	GREEN
WHITE	VEH. COMMON

PEDESTRIAN HEADS	
BASIC COLOR	SIGNAL INDICATION
RED	DON'T WALK
GREEN	WALK
WHITE	PED. COMMON
BLACK	SPARE

IMSA CABLE 19-1, #14 AWG, 7 CONDUCTOR

SIGNAL HEADS		
BASIC COLOR	SIGNAL INDICATION	HAWK HEAD
RED	RED	RED 1
BLACK	YELLOW	RED 2
GREEN	GREEN	
ORANGE	YELLOW ARROW	YELLOW
BLUE	GREEN ARROW	
WHITE	VEH. COMMON	COMMON
BLACK/WHITE	SPARE	

NOTES:

1. FOR MATERIAL AND INSTALLATION SPECIFICATIONS SEE SECTION 478.
2. FOR EACH PEDESTRIAN PUSH BUTTON ONE (1) 2-CONDUCTOR CABLE SHALL BE PULLED CONTINUOUSLY FROM THE CONTROL CABINET TO THE PUSH BUTTON STATION.
3. INSTALL ONE (1) 7-CONDUCTOR CABLE FOR ALL OUTBOARD MAST ARM AND TYPE 'Q' SIGNAL INDICATION LOCATION ONLY.

MARICOPA COUNTY DEPARTMENT OF TRANSPORTATION	COLOR CODE - 2, 4 AND 7 CONDUCTOR CABLE	DATE:	DETAIL NO.
STANDARD DETAIL		7/01/2013	4799-1

IMSA CABLE 19-1, #14 AWG, 20 CONDUCTOR

CABLE #1	CABLE #2	CONDUCTOR COLOR		SIGNAL INTERVAL	HAWK INTERVAL
		BASIC COLOR	TRACER STRIPE		
ϕ1	ϕ5 OR OVERLAP A	RED	-----	RED	RED 1 RED 2
		ORANGE	-----	YELLOW	
		GREEN	-----	GREEN	
ϕ2	ϕ6 OR OVERLAP B	RED	BLACK	RED	
		ORANGE	BLACK	YELLOW	YELLOW
		GREEN	BLACK	GREEN	
ϕ3	ϕ7 OR OVERLAP C	BLACK	RED	RED	
		ORANGE	RED	YELLOW	
		BLUE	RED	GREEN	
ϕ4	ϕ8 OR OVERLAP D	RED	WHITE	RED	DON'T WALK
		BLACK	WHITE	YELLOW	
		GREEN	WHITE	GREEN	WALK
ϕ1 PED. OR ϕ2 PED.	ϕ6 PED.	BLUE	-----	WALK	
		BLACK	-----	DON'T WALK	
ϕ2 PED. OR ϕ4 PED.	ϕ8 PED.	BLUE	WHITE	WALK	
		RED	GREEN	DON'T WALK	
ALL ϕ 'S	ALL ϕ 'S	BLUE	BLACK	SPARE	
		WHITE	BLACK	SPARE	
		WHITE	RED	SPARE	

NOTES:

1. FOR MATERIAL AND INSTALLATION SPECIFICATIONS SEE MCDOT SUPPLEMENT SECTION 478
2. A THWN, #10 AWG, WHITE CONDUCTOR SHALL BE PULLED WITH EACH IMSA CABLE AS A SIGNAL COMMON.
3. FOR THE LUMINAIRE CIRCUIT, TWO (2) CONDUCTORS, THWN #12 AWG, SHALL BE PULLED, A BLACK AND A WHITE.
4. CABLE #1 FOR RING 1.
5. CABLE #2 FOR RING 2. (CABLE #2 SHALL BE MARKED BY TWO (2) WRAPS OF WHITE TAPE)

MARICOPA COUNTY DEPARTMENT OF TRANSPORTATION	COLOR CODE - 20 CONDUCTOR CABLE	DATE:	DETAIL NO.
STANDARD DETAIL		7/01/2013	4799-2

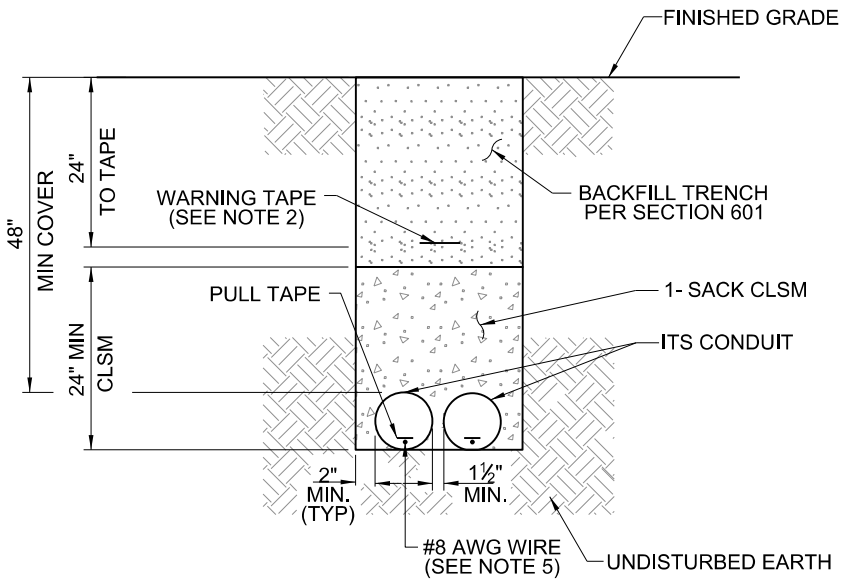

TWO ITS TRUNKLINE CONDUITS

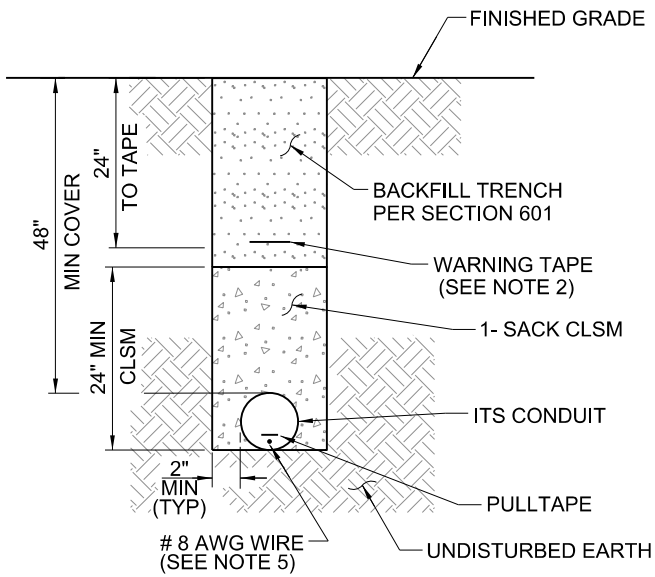

ITS BRANCH OR SINGLE TRUNKLINE CONDUIT

NOTES:

1. PULL TAPE SHALL BE INSTALLED IN ALL EMPTY CONDUITS AND ALL UNOCCUPIED INNERDUCT CELLS.
2. WARNING TAPE SHALL BE CENTERED OVER CONDUIT AND INSTALLED AT A DEPTH OF 24" FROM FINISHED GRADE. TAPE SHALL MEET THE REQUIREMENTS OF SECTION 481.2.8.
3. AFTER COMPLETION OF TRENCH BACKFILL, CONDUIT SHALL BE BLOWN OUT WITH COMPRESSED AIR AND HAVE A METAL DISK MANDREL 90% OF THE INSIDE DIAMETER (80 % FOR HDPE) OF THE CONDUIT PULLED THROUGH THE CONDUIT PRIOR TO ACCEPTANCE.
4. CONDUIT ALIGNMENT OFFSETS ARE TO BE ACCOMPLISHED BY A UNIFORM RATE OF CONDUIT DEFLECTION OVER A DISTANCE EQUAL TO OR GREATER THAN TEN (10) TIMES THE OFFSET DISTANCE.
5. BAREBOND #8 AWG WIRE SHALL BE INSTALLED CONTINUOUSLY UNSPLICED IN ALL CONDUITS TO ESTABLISH AN UNBROKEN PATH FOR LOCATING PURPOSES.

MARICOPA COUNTY DEPARTMENT OF TRANSPORTATION	TYPICAL ITS PVC CONDUIT INSTALLATION	DATE:	DETAIL NO.
STANDARD DETAIL		10/19/2013	4801

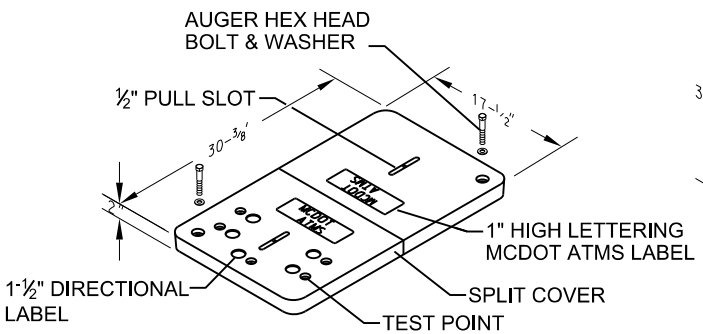

COVER

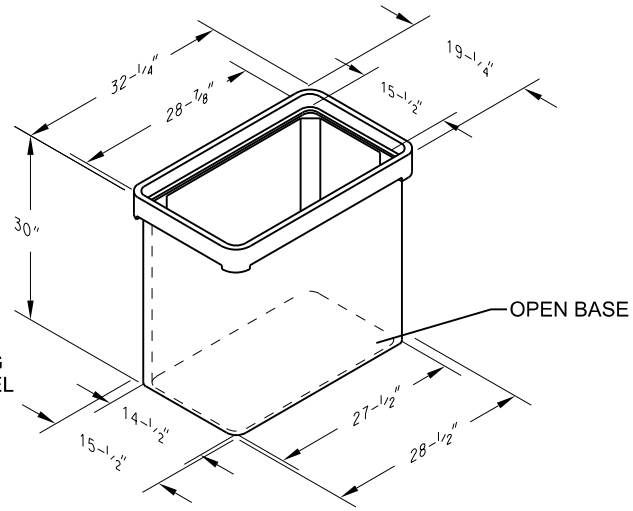

BOX

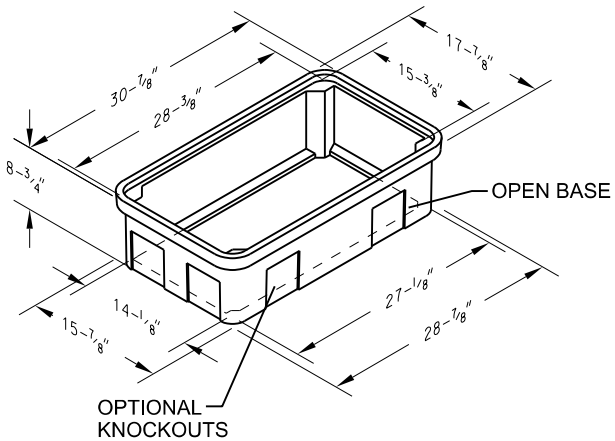

EXTENSION

TYPE-A PULL BOX

PLAN SYMBOL

NOTES:

1. PULL BOX AND COVER SHALL BE OF POLYMER CONCRETE MATERIAL.
2. PULL BOX SPLIT COVERS SHALL BE SECURED TO PULL BOX USING 3/8-7 AUGER HEX HEAD BOLTS AND 3/8 FLAT WASHERS ON EACH COVER.
3. PULL BOX COVERS SHALL HAVE THE WORDS 'MCDOT ATMS' IN NOMINAL 1-INCH HIGH LETTERS.
4. PULL BOX COVERS SHALL BE FURNISHED WITH A MINIMUM OF FIVE (5) TEST POINT LOCATIONS ON ONE SIDE OF THE SPLIT COVER. THE TEST POINT COVERS SHALL CONSIST OF 1/2-13 UNC STAINLESS STEEL CAPTIVE PENTA HEAD OR HEX BOLTS IN RECESSED HOLE CAPABLE OF BEING CONNECTED TO NO. 8 AWG TRACER WIRE, GROUND WIRE OR DETECTABLE PULL TAPE AT THE BOTTOM OF THE COVER. ALL TEST POINTS SHALL BE EQUIPPED WITH A REMOVABLE PLASTIC COVER. ADDITIONAL TEST POINTS SHALL BE PROVIDED WHEN NEEDED.
5. TEST POINT LOCATIONS SHALL BE SEPARATED FROM EACH OTHER BY A MINIMUM DISTANCE OF 8 INCHES.
6. COVER PULL SLOTS SHALL BE A MINIMUM OF 1/2-INCH WIDE AND RATED FOR A MINIMUM OF 3,000 LBS.
7. PULL BOX COVERS SHALL HAVE 1-1/2 INCH DIAMETER RECESSED SMOOTH SURFACE NEXT TO EACH TEST POINT LOCATION FOR DIRECTIONAL LABELS.
8. UV RESISTANT POLYCARBONATE DIRECTIONAL LABELS SHALL BE 1-1/2 INCH DIAMETER ORANGE CIRCLE WITH BLACK ARROW GRAPHIC.
9. THE RECESSED SURFACE OF THE POLYMER CONCRETE PULL BOX SHALL BE CLEANED WITH ALCOHOL OR ACETONE PRIOR TO APPLYING LABELS.
10. FOR INSTALLATION OF PULL BOX AND CONDUIT SEE DETAIL 4810.

MARICOPA COUNTY DEPARTMENT OF TRANSPORTATION	ITS FIBER OPTIC PULL BOX TYPE A	DATE:	DETAIL NO.
STANDARD DETAIL		10/19/2013	4805-1

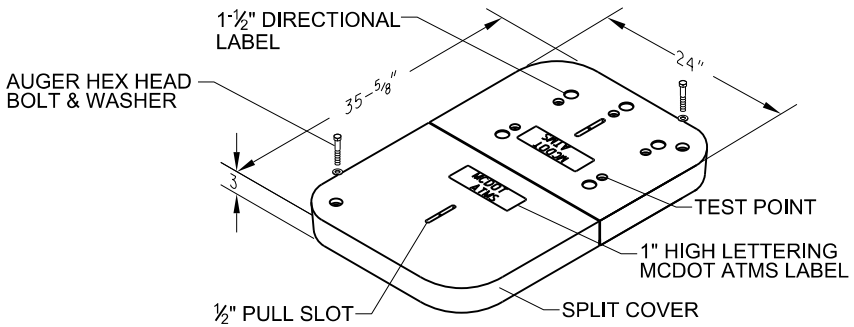

COVER

TYPE-B PULL BOX

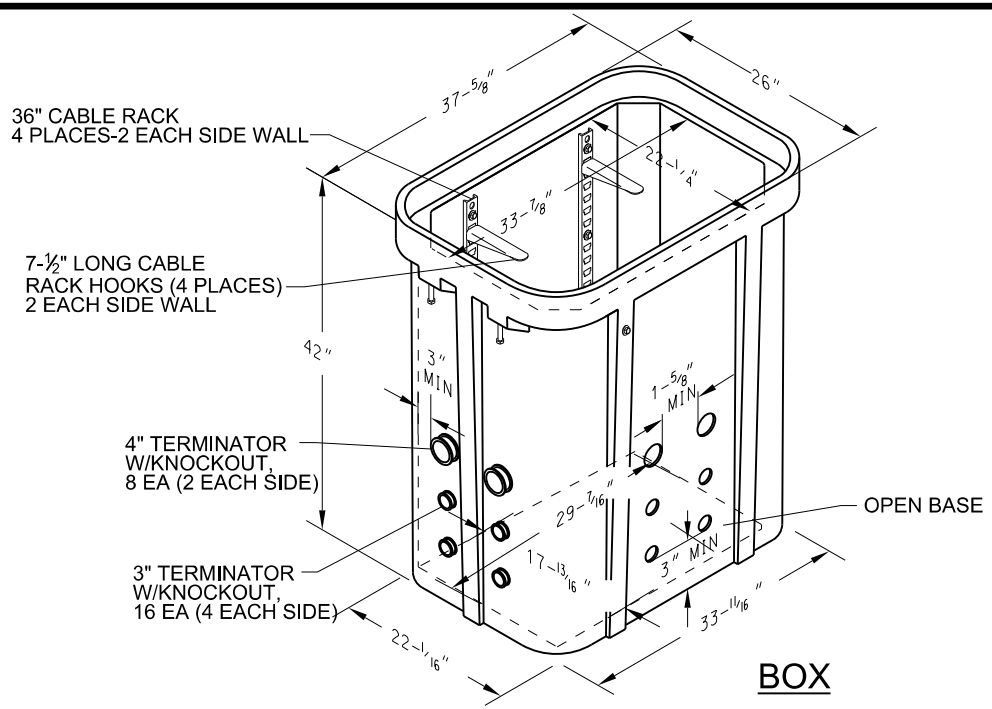

BOX

NOTES:

PLAN SYMBOL

1. PULL BOX AND COVER SHALL BE OF POLYMER CONCRETE MATERIAL. PULL BOX COVER SHALL PROVIDE A SKID RESISTANT SURFACE.
2. PULL BOX SPLIT COVERS SHALL BE SECURED TO PULL BOX USING 3/8-7 AUGER HEX HEAD BOLTS AND 3/8 FLAT WASHERS ON EACH COVER.
3. PULL BOX COVER SHALL HAVE THE WORDS 'MCDOT ATMS' IN NOMINAL 1-INCH HIGH LETTERS.
4. PULL BOX COVERS SHALL BE FURNISHED WITH A MINIMUM OF FIVE (5) TEST POINT LOCATIONS ON ONE SIDE OF THE SPLIT COVER. THE TEST POINT COVERS SHALL CONSIST OF 1/2-13 UNC STAINLESS STEEL CAPTIVE PENTA HEAD OR HEX BOLTS IN RECESSED HOLE CAPABLE OF BEING CONNECTED TO NO. 8 AWG TRACER WIRE AT THE BOTTOM OF THE COVER. ALL TEST POINTS SHALL BE EQUIPPED WITH A REMOVABLE PLASTIC COVER. ADDITIONAL TEST POINTS SHALL BE PROVIDED WHEN NEEDED.
5. TEST POINT LOCATIONS SHALL BE SEPARATED FROM EACH OTHER BY A MINIMUM DISTANCE OF 8 INCHES.
6. COVER PULL SLOTS SHALL BE 1/2-INCH WIDE AND RATED FOR A MINIMUM OF 3,000 LBS.
7. PULL BOX COVERS SHALL HAVE 1-1/2 INCH DIAMETER RECESSED SMOOTH SURFACE NEXT TO EACH TEST POINT LOCATION FOR DIRECTIONAL LABELS.
8. UV RESISTANT POLYCARBONATE DIRECTIONAL LABELS SHALL BE 1-1/2 INCH DIAMETER ORANGE CIRCLE WITH BLACK ARROW GRAPHIC.
9. THE RECESSED SURFACE OF THE POLYMER CONCRETE PULL BOX SHALL BE CLEANED WITH ALCOHOL OR ACETONE PRIOR TO APPLYING LABELS.
10. FOR INSTALLATION OF PULL BOX AND CONDUIT SEE DETAIL 4811.
11. TRANSITION COUPLINGS SHALL BE USED TO TRANSITION SMALLER SIZED CONDUITS TO THE SIZE MATCHING TERMINATORS IN PULL BOX.

MARICOPA COUNTY DEPARTMENT OF TRANSPORTATION	ITS FIBER OPTIC PULL BOX TYPE B	DATE:	DETAIL NO.
STANDARD DETAIL		10/18/2013	4805-2

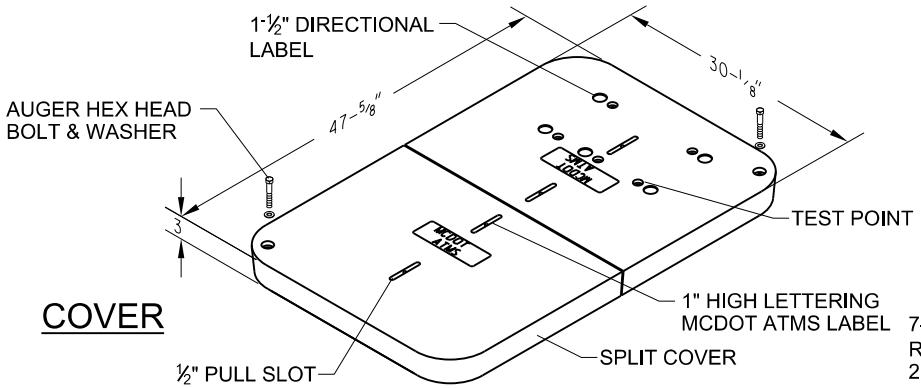

COVER

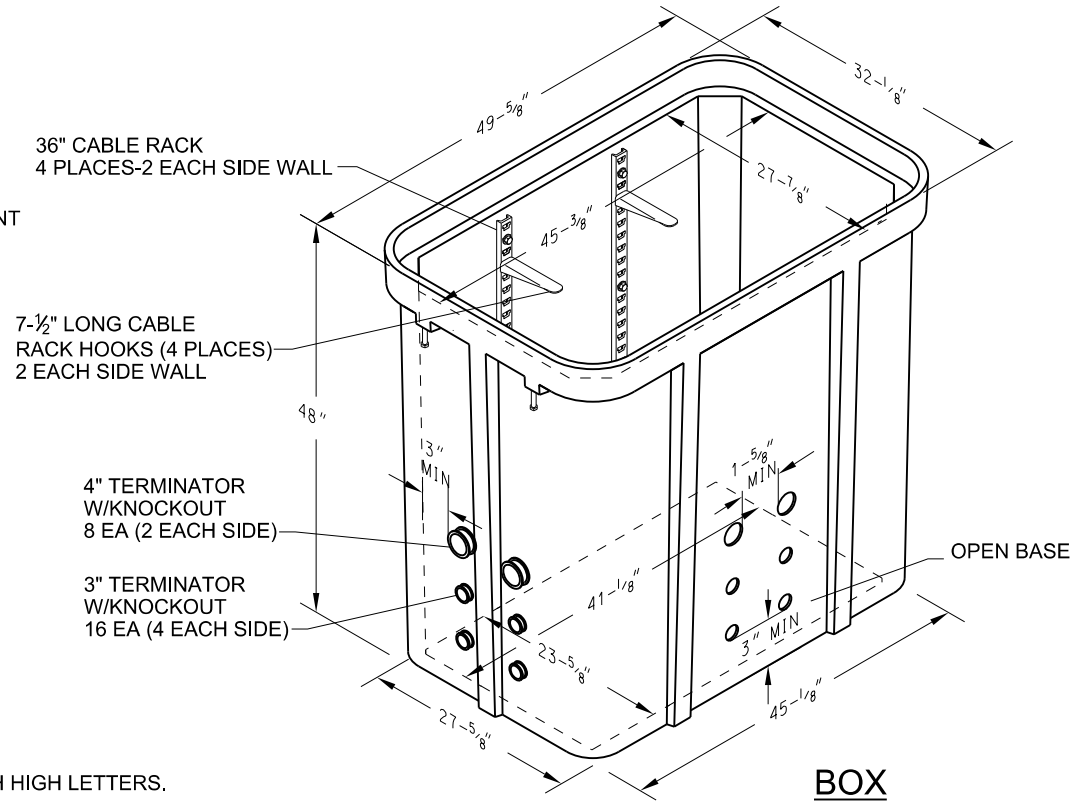

BOX

TYPE-C PULL BOX

NOTES:

1. PULL BOX AND COVER SHALL BE OF POLYMER CONCRETE MATERIAL. PULL BOX COVERS SHALL PROVIDE A SKID RESISTANT SURFACE.
2. PULL BOX SPLIT COVERS SHALL BE SECURED TO PULL BOX USING 3/8-7 AUGER HEX HEAD BOLTS AND 3/8 FLAT WASHERS ON EACH COVER.
3. PULL BOX COVERS SHALL HAVE THE WORDS 'MCDOT ATMS' IN NOMINAL 1-INCH HIGH LETTERS.
4. PULL BOX COVERS SHALL BE FURNISHED WITH A MINIMUM OF FIVE (5) TEST POINT LOCATIONS ON ONE SIDE OF THE SPLIT COVER. THE TEST POINT COVERS SHALL CONSIST OF 1/2-13 UNC STAINLESS STEEL CAPTIVE PENTA HEAD OR HEX BOLTS IN RECESSED HOLE CAPABLE OF BEING CONNECTED TO NO. 8 AWG TRACER WIRE AT THE BOTTOM OF THE COVER. ALL TEST POINTS SHALL BE EQUIPPED WITH A REMOVABLE PLASTIC COVER. ADDITIONAL TEST POINTS SHALL BE PROVIDED WHEN NEEDED.
5. TEST POINT LOCATIONS SHALL BE SEPARATED FROM EACH OTHER BY A MINIMUM DISTANCE OF 8 INCHES.
6. COVER PULL SLOTS SHALL BE 1/2-INCH WIDE AND RATED FOR A MINIMUM OF 3,000 LBS.
7. PULL BOX COVERS SHALL HAVE 1-1/2 INCH DIAMETER RECESSED SMOOTH SURFACE NEXT TO EACH TEST POINT LOCATION FOR DIRECTIONAL LABELS.
8. UV RESISTANT POLYCARBONATE DIRECTIONAL LABELS SHALL BE 1-1/2 INCH DIAMETER ORANGE CIRCLE WITH BLACK ARROW GRAPHIC.
9. THE RECESSED SURFACE OF THE POLYMER CONCRETE PULL BOX SHALL BE CLEANED WITH ALCOHOL OR ACETONE PRIOR TO APPLYING LABELS.
10. FOR INSTALLATION OF PULL BOX AND CONDUIT SEE DETAIL 4811.
11. TRANSITION COUPLINGS SHALL BE USED TO TRANSITION SMALLER SIZED CONDUITS TO THE SIZE MATCHING TERMINATORS IN PULL BOX.

PLAN SYMBOL

MARICOPA COUNTY DEPARTMENT OF TRANSPORTATION	ITS FIBER OPTIC PULL BOX TYPE C	DATE:	DETAIL NO.
STANDARD DETAIL		10/18/2013	4805-3

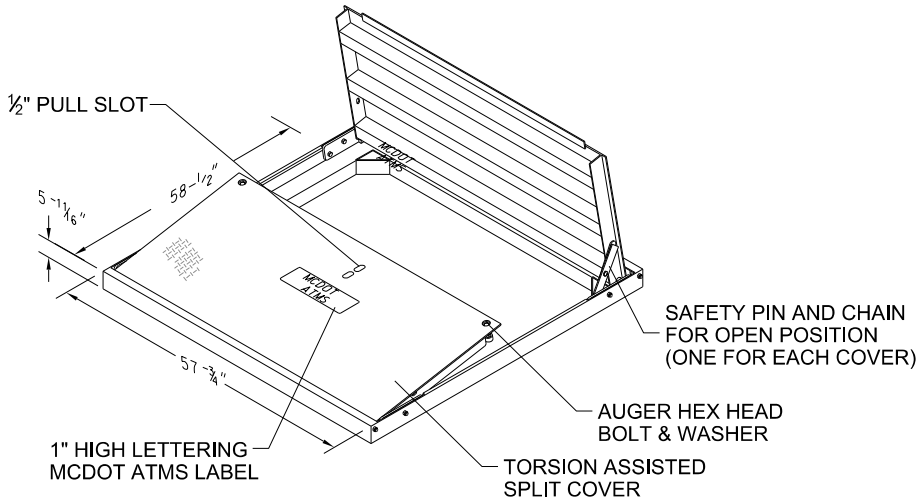

COVER

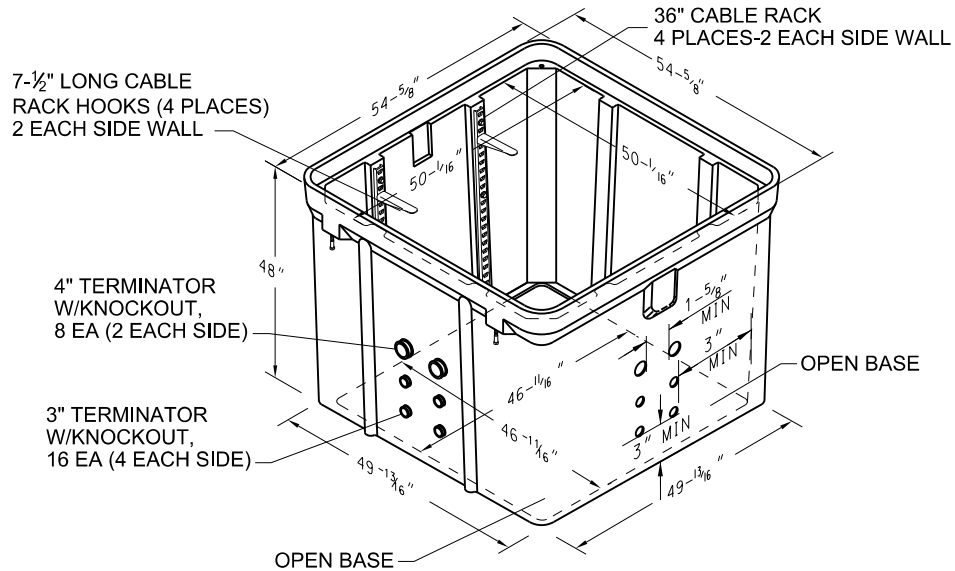

BOX

TYPE-D PULL BOX

(NOT FOR AREAS SUBJECT TO VEHICULAR TRAFFIC)

PLAN SYMBOL

NOTES:

1. PULL BOX SHALL BE OF POLYMER CONCRETE MATERIAL.
2. PULL BOX COVER SHALL BE DIAMOND PLATE GALVANIZED OR MILD STEEL AND SHALL PROVIDE A SKID RESISTANT SURFACE.
3. PULL BOX COVER AND FRAME SHALL PROVIDE TORSION ASSISTANCE FOR LIFTING.
4. THE TORSION ASSISTED COVER FRAME SHALL HAVE A LOCKING MECHANISM INCLUDING A SAFETY PIN AND CHAIN TO LOCK THE COVER IN POSITION WHEN OPENED.
5. PULL BOX SPLIT COVERS SHALL BE SECURED TO PULL BOX USING FOUR 1/2-13 UNC HEX HEAD BOLTS AND 3/8 FLAT WASHERS, TWO ON EACH COVER.
6. PULL BOX COVERS SHALL HAVE THE WORDS 'MCDOT ATMS' IN NOMINAL 1-INCH HIGH LETTERS.
7. COVER PULL SLOTS SHALL BE 1/2-INCH WIDE AND RATED FOR A MINIMUM OF 3,000 LBS.
8. FOR INSTALLATION OF PULL BOX AND CONDUIT SEE DETAIL 4811.
9. TRANSITION COUPLINGS SHALL BE USED TO TRANSITION SMALLER SIZED CONDUITS TO THE SIZE MATCHING TERMINATORS IN PULL BOX.

MARICOPA COUNTY DEPARTMENT OF TRANSPORTATION	ITS FIBER OPTIC PULL BOX TYPE D	DATE:	DETAIL NO.
STANDARD DETAIL		10/18/2013	4805-4

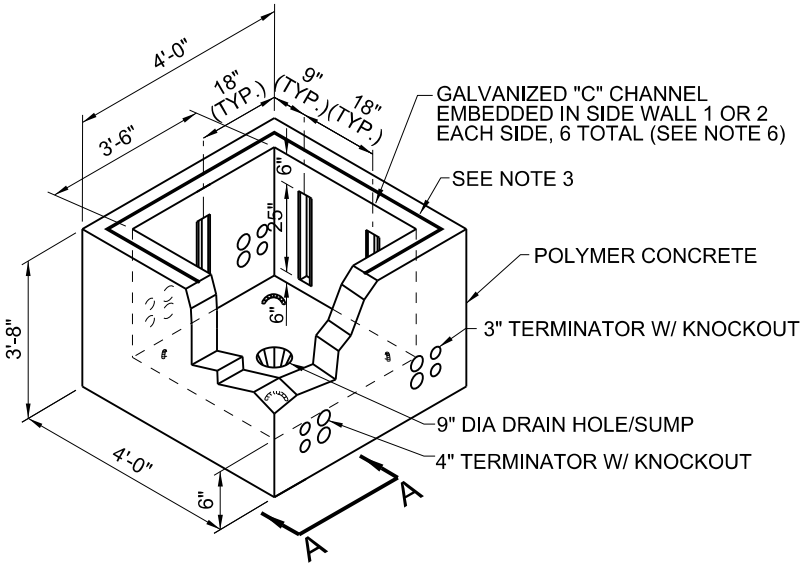

TYPE E PULL BOX

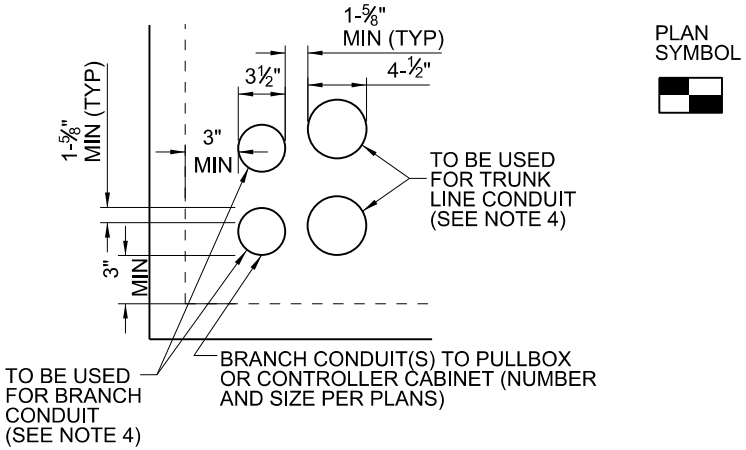

SECTION A-A

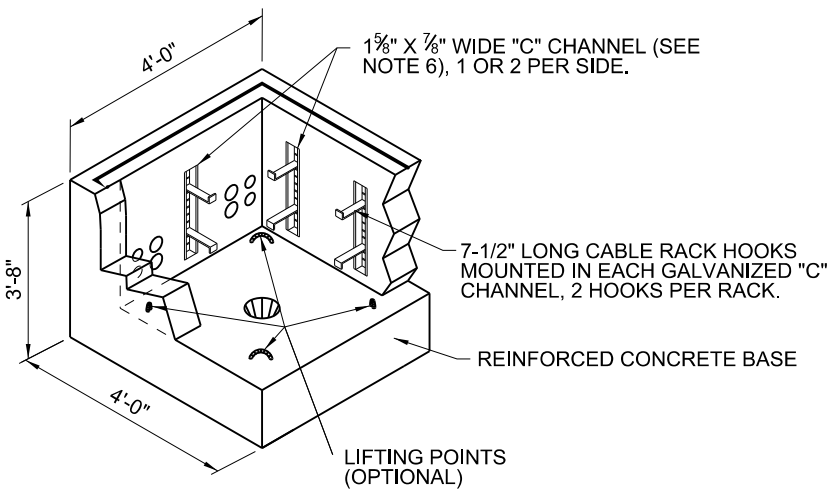

NOTES:

1. PULL BOX SHALL BE OF PRECAST REINFORCED CONCRETE MATERIAL.
2. PULL BOX SHALL BE FURNISHED WITH HOOKS/RACKS AND UNISTRUT INSTALLED.
3. PULL BOX SHALL BE FURNISHED WITH A LOCKING LIP WITH SEAL BETWEEN WALL AND COVER ASSEMBLY.
4. TERMINATORS/ BELL ENDS SHALL ACCEPT 4-INCH AND 3-INCH DIA. CONDUIT SIZES.
6. UNISTRUT SHALL BE WIDE "C" CHANNEL (UNISTRUT P-3200 OR APPROVED EQUAL) AND SHALL BE EMBEDDED IN SIDEWALL A MINIMUM OF 6-INCHES FROM FINISHED FLOOR.
7. CABLE RACKS/ HOOKS MOUNTED IN UNISTRUT SHALL BE A MINIMUM OF 7-1/2 INCHES LONG.
8. FOR COVER ASSEMBLY, SEE DETAIL 4806-2.

MARICOPA COUNTY DEPARTMENT OF TRANSPORTATION	ITS FIBER OPTIC PULL BOX TYPE E	DATE:	DETAIL NO.
STANDARD DETAIL		10/25/2013	4806-1

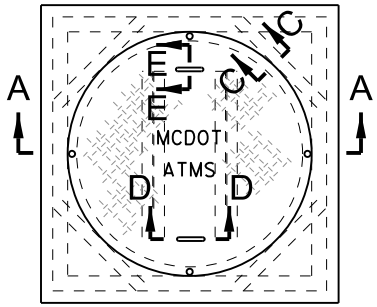

COVER ASSEMBLY

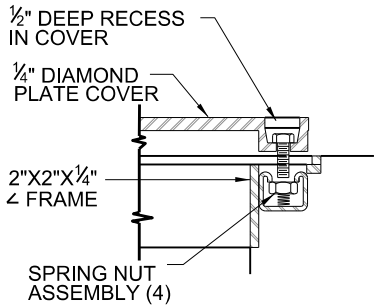

DETAIL B
(BOLT DOWN)

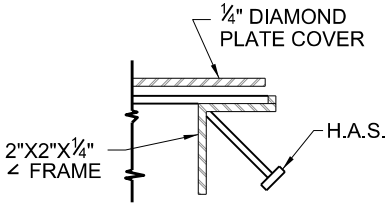

SECTION C-C
(TYPICAL)

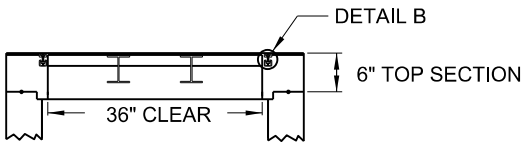

SECTION A-A

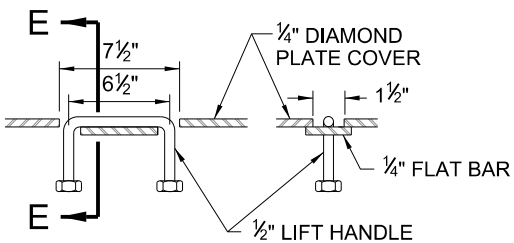

SECTION D-D
(LIFT HANDLE)

SECTION E-E
(LIFT HANDLE)

NOTES:

1. PULL BOX COVER SHALL BE 1/4-INCH DIAMOND PLATE GALVANIZED OR MILD STEEL AND SHALL PROVIDE A SKID RESISTANT SURFACE.
2. PULL BOX COVER SHALL BE SECURED TO PULL BOX USING A SPRING NUT ASSEMBLY.
3. PULL BOX COVERS SHALL HAVE THE WORDS 'MCDOT ATMS' IN 1-INCH HIGH LETTERS.
4. COVER PULL SLOTS SHALL BE A MINIMUM OF 7-1/2 -INCH WIDE AND BE EQUIPPED WITH LIFT HANDLES.
5. COVER SLOTS AND LIFT HANDLES SHALL BE RATED FOR A MINIMUM OF 3,000 LBS PULLING FORCE.

MARICOPA COUNTY DEPARTMENT OF TRANSPORTATION	ITS FIBER OPTIC TYPE E PULL BOX COVER ASSEMBLY	DATE:	DETAIL NO.
STANDARD DETAIL		10/25/2013	4806-2

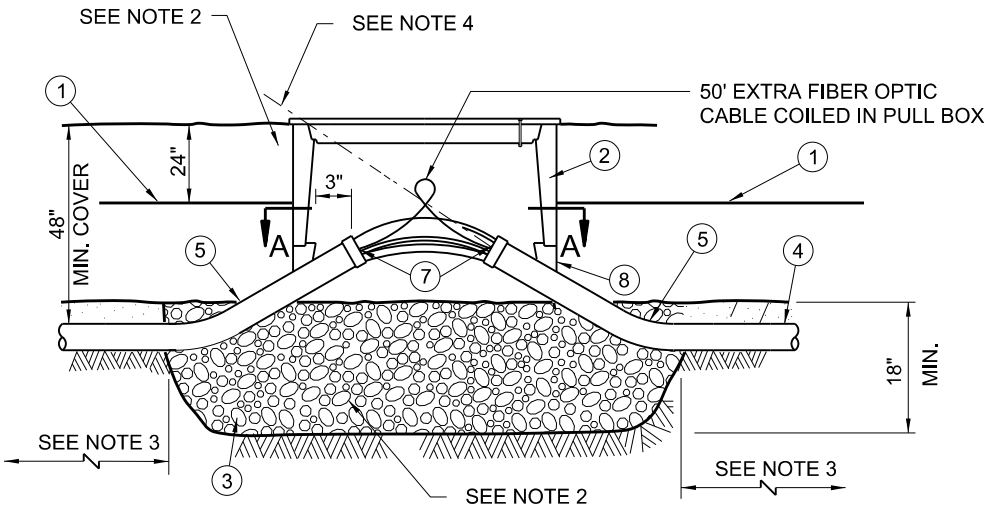

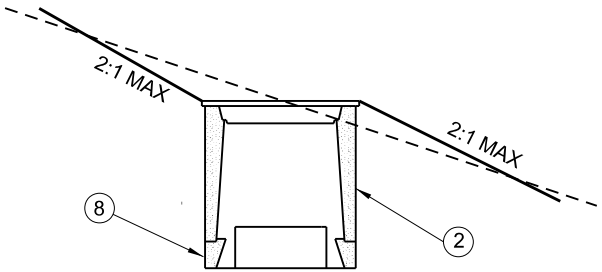

INSTALLATION IN SLOPED AREAS

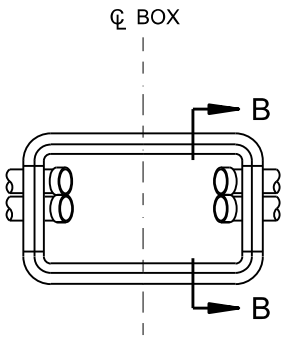

SECTION A-A

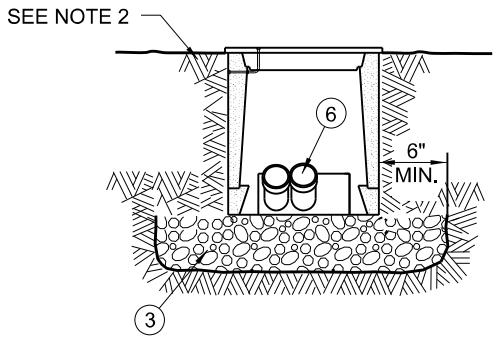

SECTION B-B

MATERIAL LIST	
ITEM	DESCRIPTION
1	WARNING TAPE
2	ITS FIBER OPTIC PULL BOX - TYPE A, DETAIL 4805-1
3	18" DEEP GRAVEL BED
4	4" DIA, SCHEDULE 40 P.V.C./SDR 11 HDPE CONDUIT
5	30 DEGREE ELBOW, 15" RADIUS
6	CONDUIT PLUG
7	BELL END FOR PVC
8	PULL BOX EXTENSION - TYPE A, DETAIL 4805-1

NOTES:

1. FOR MATERIAL AND CONSTRUCTION SPECIFICATIONS SEE SECTION 481.
2. BACKFILL BELOW THE PULL BOX WITH AN EIGHTEEN INCH (18") DEEP UNIFORMLY GRADED GRAVEL BED. THE GRAVEL BED SHALL EXTEND A MINIMUM OF SIX INCHES BEYOND THE PULL BOX EDGES. BACKFILL VOIDS AROUND THE SIDES OF THE PULL BOX WITH EXCAVATED MATERIAL COMPACTED TO 95% MAXIMUM DENSITY WHEN LOCATED IN AN AREA SUBJECT TO VEHICULAR TRAFFIC AND COMPACTED TO 90% MAXIMUM DENSITY WHEN LOCATED BACK OF CURB.
3. CONDUIT ALIGNMENT OFFSETS ARE TO BE ACCOMPLISHED BY A UNIFORM RATE OF CONDUIT DEFLECTION OVER A DISTANCE EQUAL TO OR GREATER THAN TEN (10) TIMES THE OFFSET DISTANCE.
4. CONDUIT C/L SHALL BE ALIGNED TO BE PARALLEL TO EDGE OF PULL BOX TO FACILITATE CABLE PULLING.
5. ALL POWER AND COMMUNICATIONS CABLE SHALL BE TAGGED WITH CABLE IDENTIFICATION.
6. LOCATION AND SHAPE OF KNOCKOUTS MAY VARY.

MARICOPA COUNTY DEPARTMENT OF TRANSPORTATION	ITS CONDUIT AND ITS TYPE-A PULL BOX INSTALLATION	DATE:	DETAIL NO.
STANDARD DETAIL		10/25/2013	4810

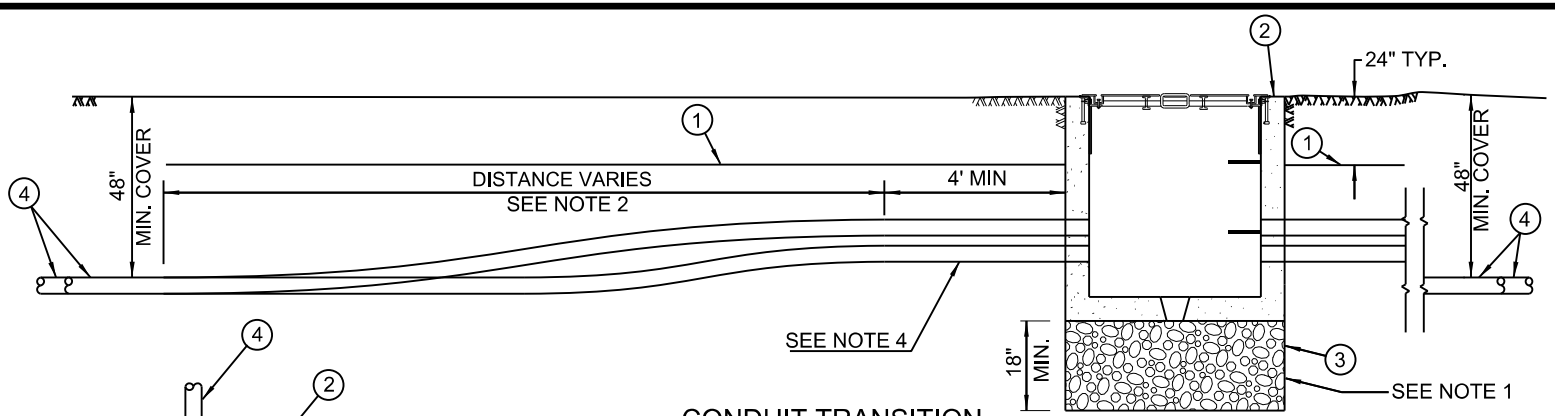

CONDUIT TRANSITION AND INSTALLATION

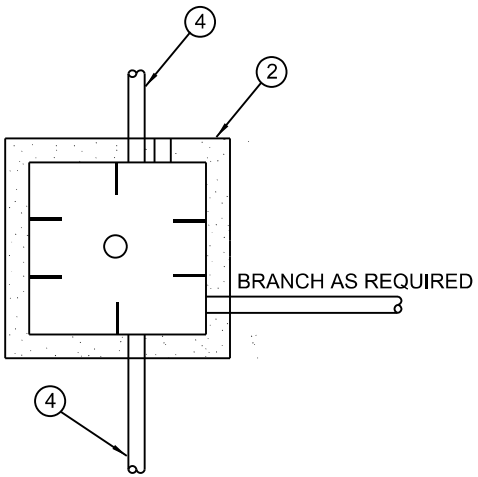

LATERAL CONDUIT INSTALLATION

MATERIAL LIST	
ITEM	DESCRIPTION
1	WARNING TAPE
2	ITS TYPE B,C,D OR E PULL BOX, DETAILS 4805-2, 3 & 4 & DETAILS 4806-1 & 2
3	18" DEEP GRAVEL BED
4	4" DIA, SCHEDULE 40 P.V.C./SDR 11 HDPE CONDUIT

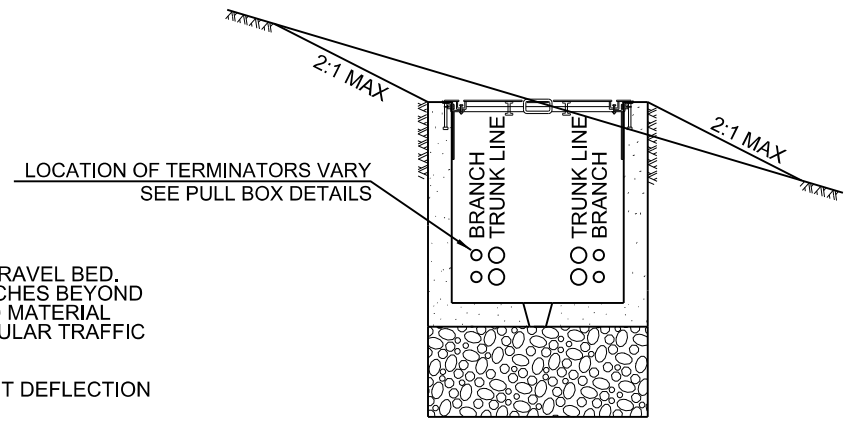

INSTALLATION IN SLOPED AREAS

NOTES:

1. BACKFILL BELOW THE PULLBOX WITH AN EIGHTEEN INCH (18") DEEP UNIFORMLY GRADED GRAVEL BED. FOR TYPES B, C AND D PULL BOXES THE GRAVEL BED SHALL EXTEND A MINIMUM OF SIX INCHES BEYOND THE PULL BOX EDGES. BACKFILL VOIDS AROUND SIDES OF THE PULL BOX WITH EXCAVATED MATERIAL COMPACTED TO 95% MAXIMUM DENSITY WHEN LOCATED IN AN AREA SUBJECTED TO VEHICULAR TRAFFIC AND COMPACTED TO 90% MAXIMUM DENSITY WHEN LOCATED BACK OF CURB..
2. CONDUIT ALIGNMENT OFFSETS ARE TO BE ACCOMPLISHED BY A UNIFORM RATE OF CONDUIT DEFLECTION OVER A DISTANCE EQUAL TO OR GREATER THAN TEN (10) TIMES THE OFFSET DISTANCE.
3. PLUG EACH EMPTY CONDUIT END WITH APPROVED, WATERPROOF DUCT PLUG.
4. USE BOTTOM ACCESS POINT IN WALL OF PULL BOX WHEN ONLY A SINGLE 4" PVC CONDUIT IS REQUIRED FOR TRUNK LINE.

TO INSTALL FIBER OPTIC CABLE IN ITS TYPE B, C, D OR E PULL BOXES SEE DETAIL 4821.

MARICOPA COUNTY DEPARTMENT OF TRANSPORTATION	ITS CONDUIT AND ITS TYPE B, C, D & E PULL BOX INSTALLATION	DATE:	DETAIL NO.
STANDARD DETAIL		10/25/2013	4811

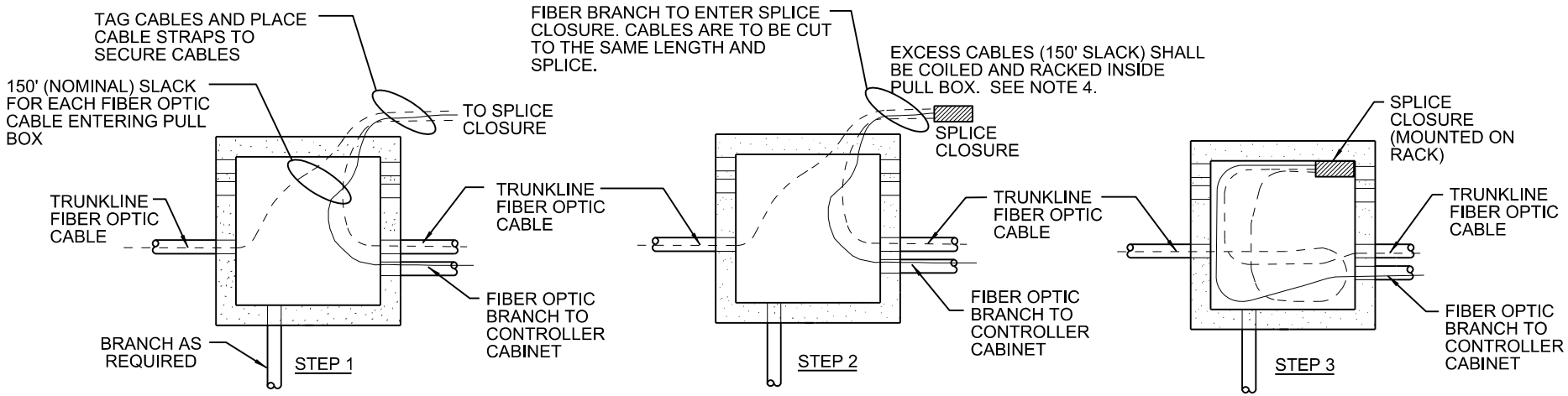

FIBER OPTIC SPLICE PROCEDURE

(TOP VIEW)

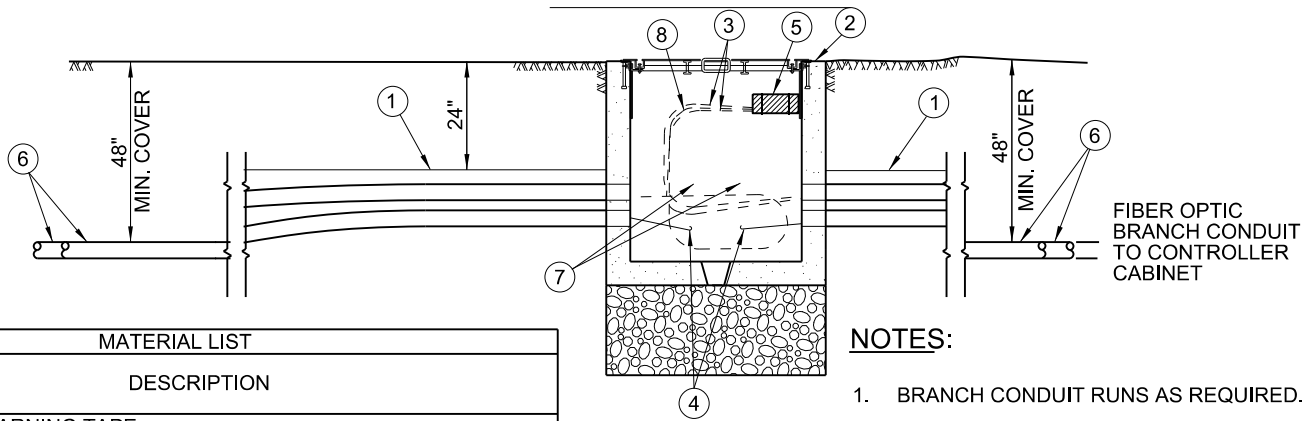

MATERIAL LIST	
ITEM	DESCRIPTION
1	WARNING TAPE
2	ITS TYPE B, C, D OR E PULL BOX
3	SINGLE MODE FIBER OPTIC CABLE (SMFO)
4	PULL TAPE SEE NOTE 3
5	FIBER OPTIC SPLICE CLOSURE
6	SCHEDULE 40 PVC OR HDPE CONDUIT, SIZE AS INDICATED ON THE PLANS
7	#8 AWG SOLID COPPER WIRE
8	SINGLE MODE FIBER OPTIC BRANCH WHERE REQUIRED

NOTES:

1. BRANCH CONDUIT RUNS AS REQUIRED.
2. ALL FIBER OPTIC CABLES SHALL HAVE PERMANENT TO/FROM LABELING TAGS ON CABLES.
3. FIBER OPTIC CABLES SHALL BE INSTALLED WITH PULL TAPE. PULL TAPE SHALL BE REPLACED WHEN USED FOR INSTALLAION.
4. PROVIDE 150' (NOMINAL) SLACK FOR EACH FIBER OPTIC CABLE ENTERING ALL ITS TYPE B, C, D OR E PULL BOXES. 300 FEET OF SLACK SHALL BE PROVIDED FOR EACH FIBER OPTIC CABLE PASSING THROUGH ITS TYPE B, C, D OR E PULL BOX WITHOUT A SPLICE CLOSURE. ALL CABLE SLACK SHALL BE COILED AND RACKED INSIDE PULL BOX.

MARICOPA COUNTY DEPARTMENT OF TRANSPORTATION	FIBER OPTIC CABLE INSTALLED IN ITS TYPE B,C,D & E PULL BOX	DATE:	DETAIL NO.
STANDARD DETAIL		08/21/2018	4821

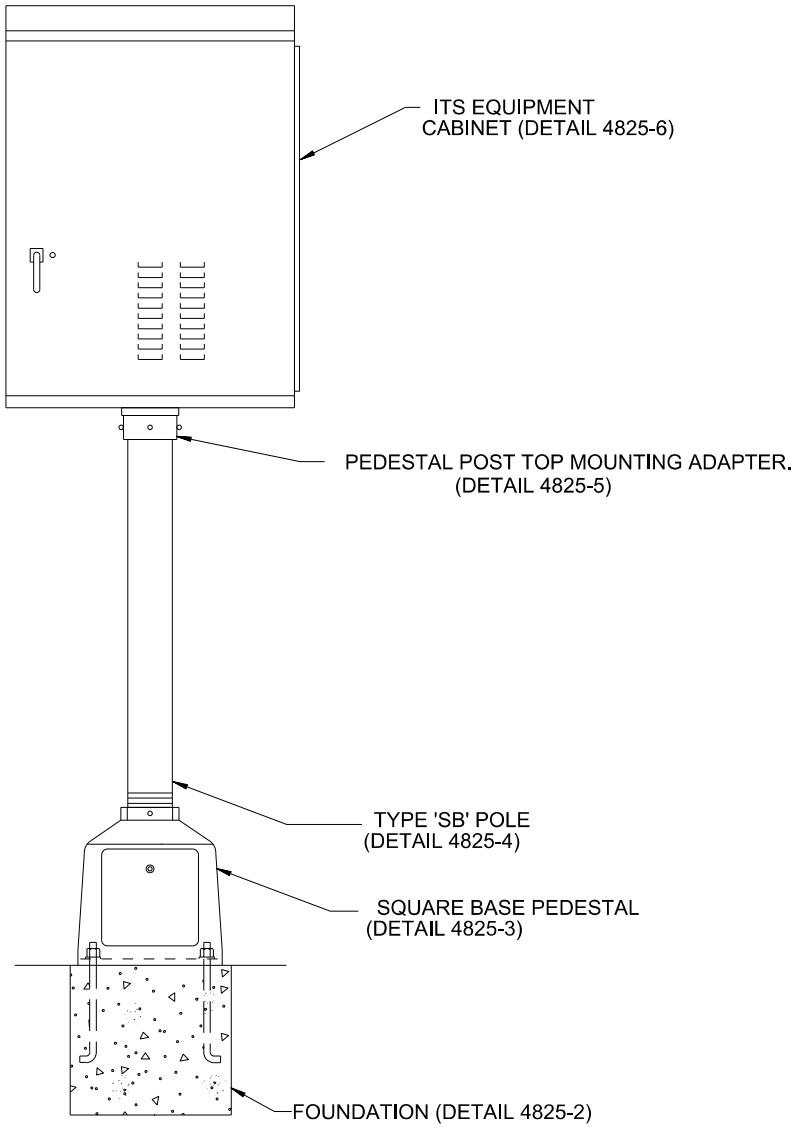

MARICOPA COUNTY DEPARTMENT OF TRANSPORTATION	ITS PEDESTAL POST TOP MOUNTING (G-1)	DATE:	DETAIL NO.
STANDARD DETAIL		4/09	4825-1

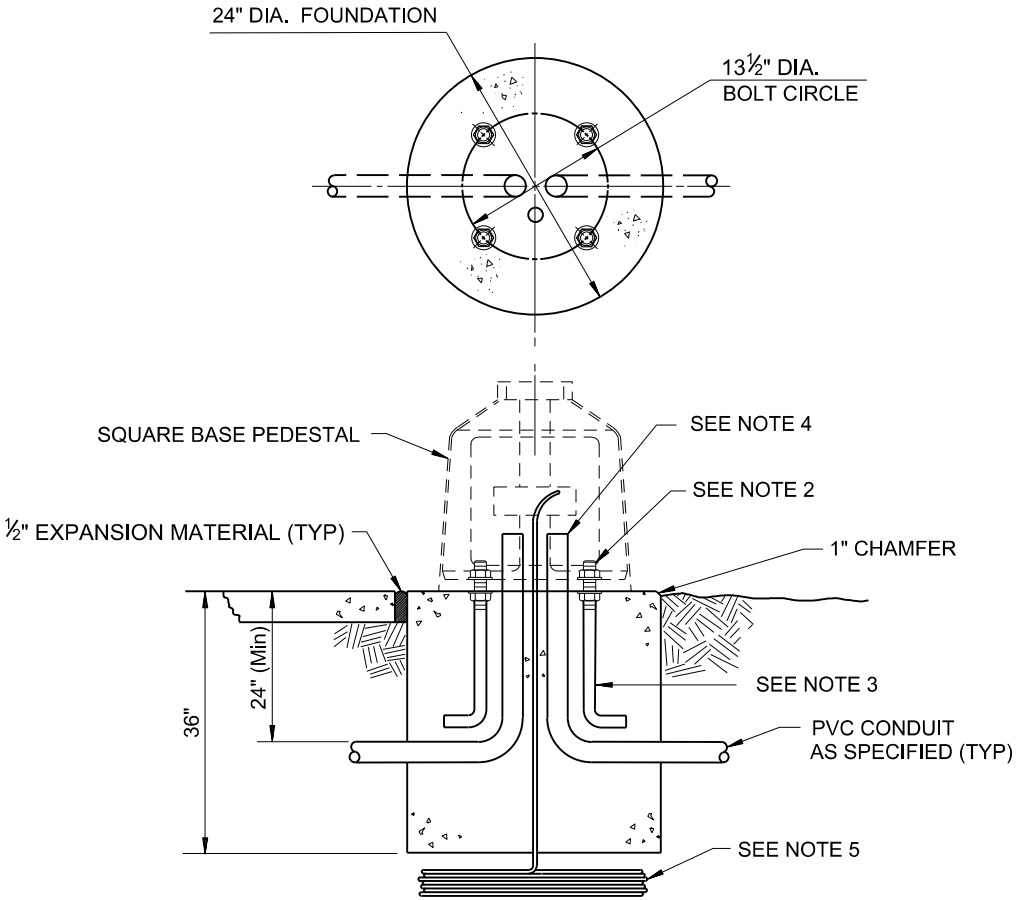

NOTES:

1. FOR MATERIAL AND CONSTRUCTION SEE SECTIONS 471 AND 472.
2. ANCHOR BOLTS SHALL EXTEND 2" ABOVE THE FOUNDATION.
3. FOUR ¾" X 18" X 4" ANCHOR BOLTS. TOP THREADED LENGTH OF ANCHOR BOLTS SHALL BE MINIMUM OF 3". SEE DETAIL 4725
4. CONDUIT SHALL EXTEND A MINIMUM OF 3" AND A MAXIMUM OF 5" ABOVE THE TOP OF THE FOUNDATION.
5. INSTALL 25 FOOT COIL OF NO. 4 AWG BARE COPPER GROUNDING ELECTRODE 2 FEET ABOVE TOP OF FOUNDATION.
6. FOR CONDUIT SIZE, LOCATION AND QUANTITY, SEE PLANS.

MARICOPA COUNTY DEPARTMENT OF TRANSPORTATION	ITS SQUARE BASE ('SB') POLE FOUNDATION DETAIL	DATE:	DETAIL NO.
STANDARD DETAIL		04/01/2009	4825-2

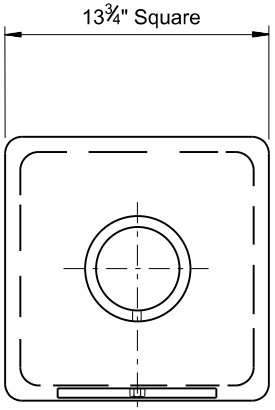

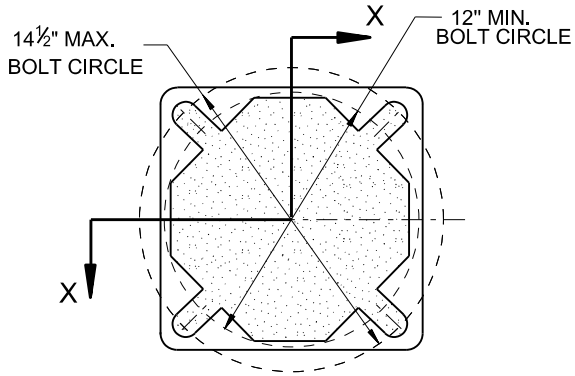

SECTION Y - Y

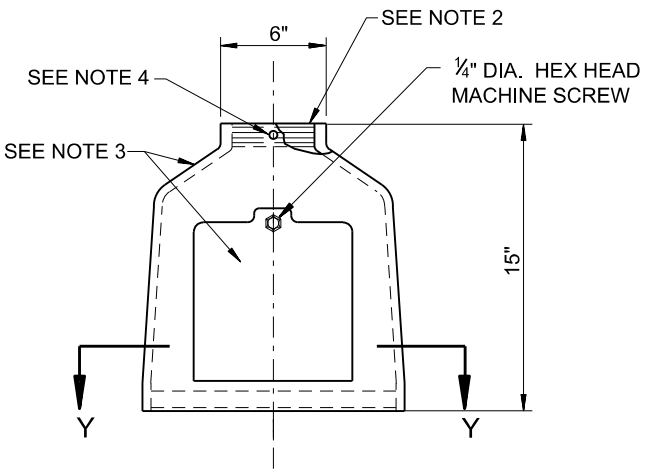

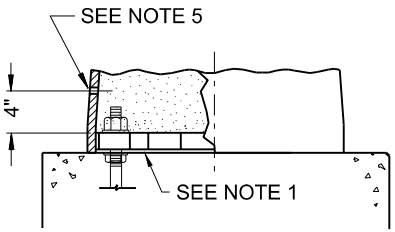

SECTION X - X

NOTES:

1. USE GROUT OR MASTIC TO SEAL GAP BETWEEN SQUARE BASE PEDESTAL AND FOUNDATION.
2. 4 INCH N.P.T. AT 8 THREADS/INCH.
3. THE SQUARE BASE PEDESTAL AND DOOR SHALL BE CONSTRUCTED OF CAST ALUMINUM.
4. A THREADED HOLE WITH ⅜" - 16 x 1" SET SCREW SHALL BE PROVIDED IN BASE COLLAR AS SHOWN.
5. A THREADED HOLE FOR ¼" - 20 SCREW SHALL BE PROVIDED FOR GROUND CONNECTION.

MARICOPA COUNTY DEPARTMENT OF TRANSPORTATION	ITS SQUARE BASE (SB) PEDESTAL	DATE:	DETAIL NO.
STANDARD DETAIL		4/09	4825-3

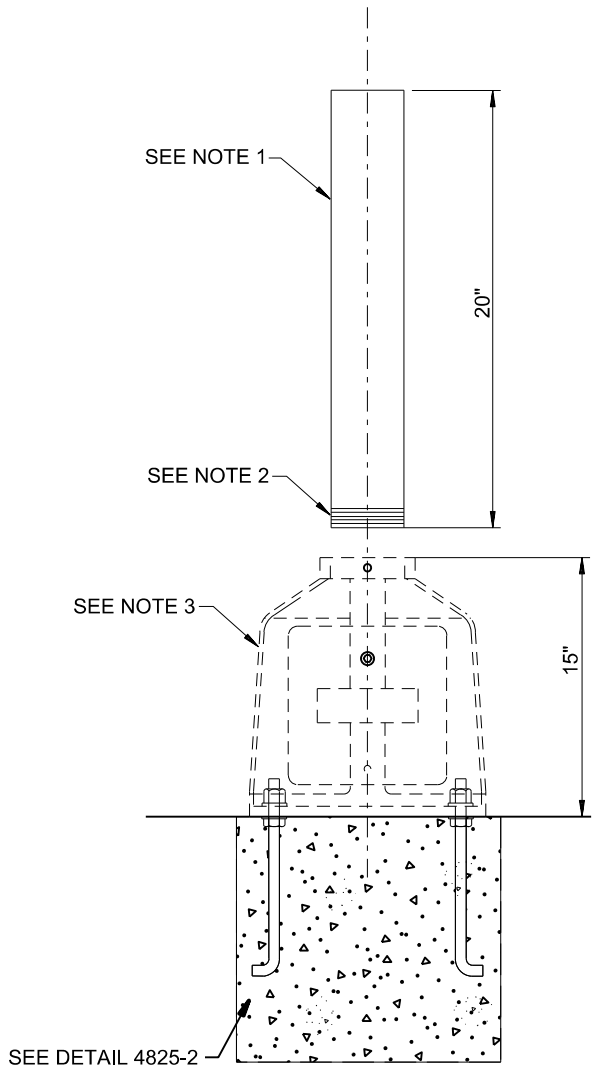

NOTES:

1. THE POLE SHAFT SHALL BE 4 ½" O.D. x 0.237 WALL (SCHEDULE 40) 6063-T6 ALUMINUM, SPUN FINISH.
2. 4-INCH N.P.T. AT 8 THREADS/INCH.
3. FOR SQUARE BASE PEDESTAL SEE DETAIL 4825-3

MARICOPA COUNTY DEPARTMENT OF TRANSPORTATION	ITS TYPE 'SB' POLE	DATE:	DETAIL NO.
STANDARD DETAIL		4/01/2009	4825-4

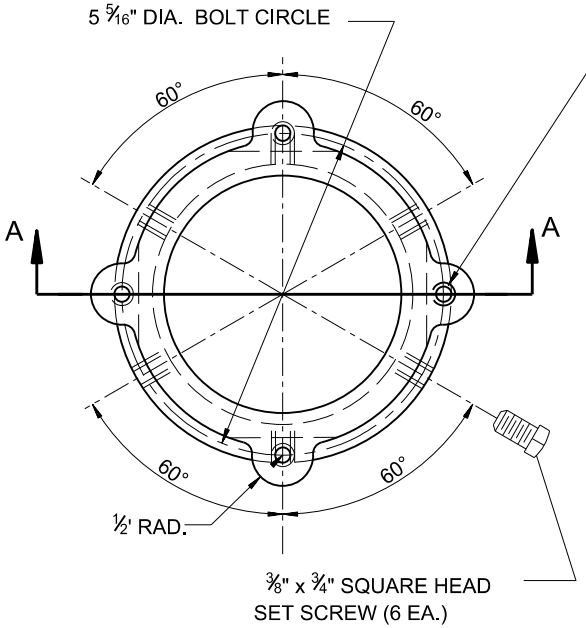

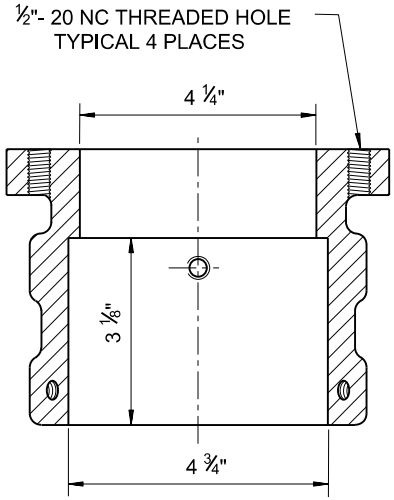

SECTION A-A

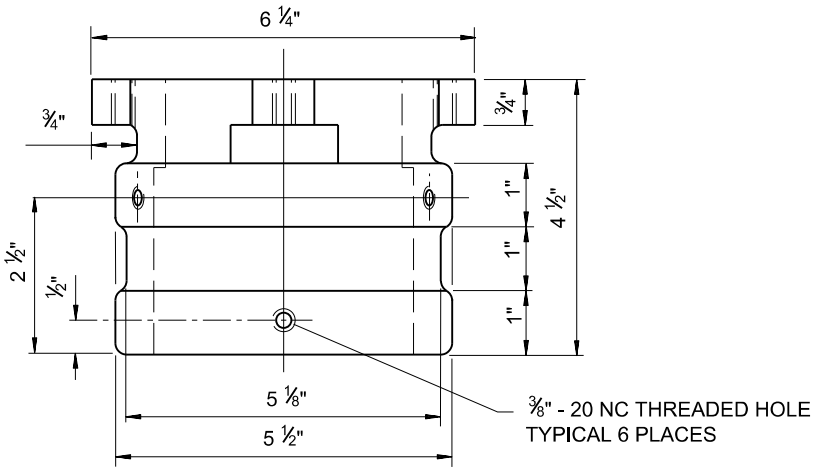

ALL FILLETS ARE 3/16" RAD.

NOTES:

1. MATERIAL SHALL BE CAST ALUMINUM.
2. ADAPTER SHALL BE TRAFFIC SIGNAL HARDWARE (TSH) 0184 OR APPROVED EQUAL.

MARICOPA COUNTY DEPARTMENT OF TRANSPORTATION	ITS PEDESTAL POLE TOP MOUNTING ADAPTER	DATE:	DETAIL NO.
STANDARD DETAIL		4/09	4825-5

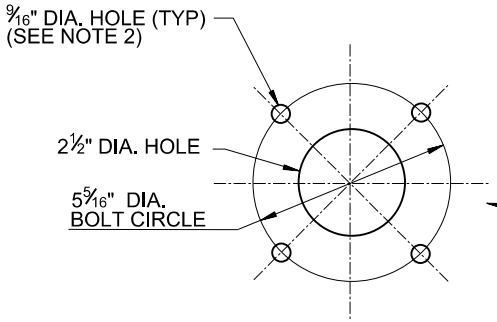

BOLT CIRCLE DETAIL

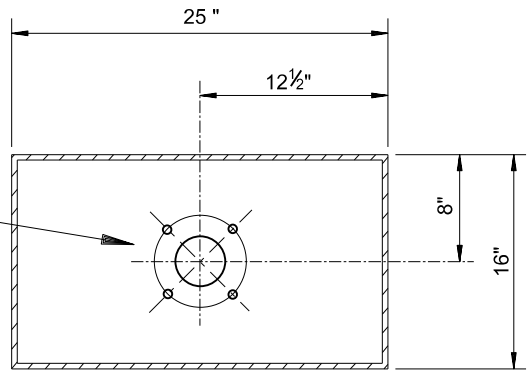

SECTION A-A

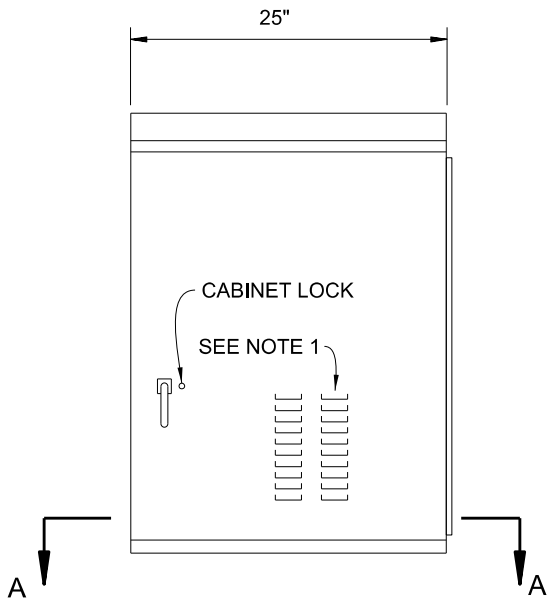

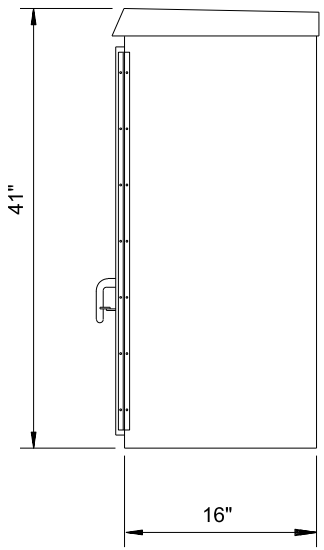

NOTES:

1. VENTILATING AIR INLET LOUVERS WITH 12"x12"x1" AIR FILTER
2. OMIT 9/16" DIAMETER HOLES FOR SIDE MOUNT INSTALLATION (DETAIL 4827).

MARICOPA COUNTY DEPARTMENT OF TRANSPORTATION	ITS TYPE 'G' CABINET	DATE:	DETAIL NO.
STANDARD DETAIL		4/09	4825-6

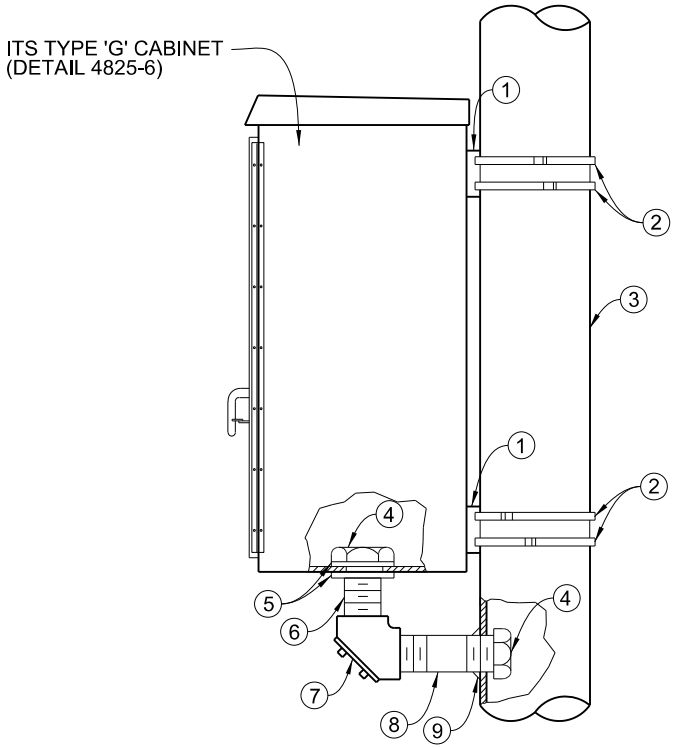

ITEM	QTY.	DESCRIPTION
1	2	POLE CLAMP (ECONOLITE NO. 9463480G1 OR EQUAL)
2	4	½" STAINLESS STEEL BAND W/BUCKLE (BAND-IT TYPE 201 OR EQUAL)
3	1	TYPE 'A' POLE OR MULTI-USE POLE
4	2	INSULATING BUSHING
5	2	LOCKNUT
6	1	2" x 2" NIPPLE
7	1	2" x 90° PULLING ELBOW
8	1	2" NIPPLE (LENGTH AS REQUIRED)
9	----	SEALING COMPOUND

MARICOPA COUNTY DEPARTMENT OF TRANSPORTATION		DATE:	DETAIL NO.
STANDARD DETAIL	ITS POST SIDE MOUNT (G-2)	04/01/2009	4827

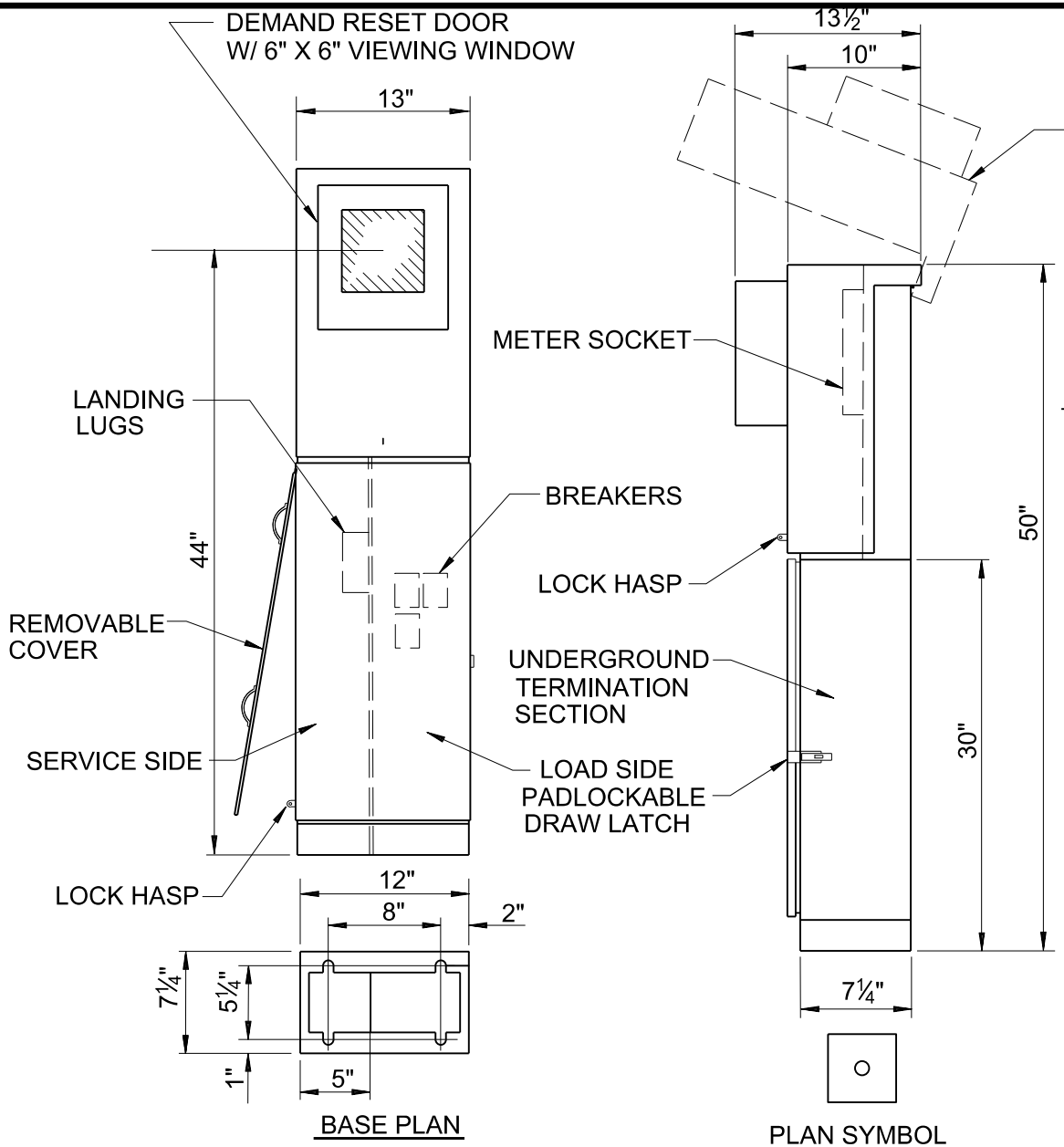

NOTES:

1. FOR CONSTRUCTION SPECIFICATIONS SEE SECTION 475.
2. EXTERIOR SHALL BE 12 GA. H. D. GALVANIZED STEEL, THE INTERIOR SHALL BE 14 GA. COLD ROLLED STEEL. ALL WELDS SHALL BE ELECTRICALLY WELDED AND REINFORCED WHERE REQUIRED.
3. CONSTRUCTION SHALL BE NEMA 3R AND 12. RAINTIGHT AND DUST TIGHT.
4. ALL NUTS, BOLTS, SCREWS AND HINGES SHALL BE STAINLESS STEEL.
5. NUTS, BOLTS AND SCREWS SHALL NOT BE VISIBLE FROM OUTSIDE OF ENCLOSURE.
6. CONTROL WIRING SHALL BE MARKED AT BOTH ENDS WITH PERMANENT WIRE MARKERS.
7. A PLASTIC COVERED WIRING DIAGRAM SHALL BE SUPPLIED WITH ENCLOSURE.
8. THE ENCLOSURE SHALL BE FACTORY WIRED AND CONFORM TO REQUIRED NEMA STANDARDS.

MARICOPA COUNTY DEPARTMENT OF TRANSPORTATION	SERVICE PEDESTAL	DATE:	DETAIL NO.
STANDARD DETAIL		1/1/2011	4829-1

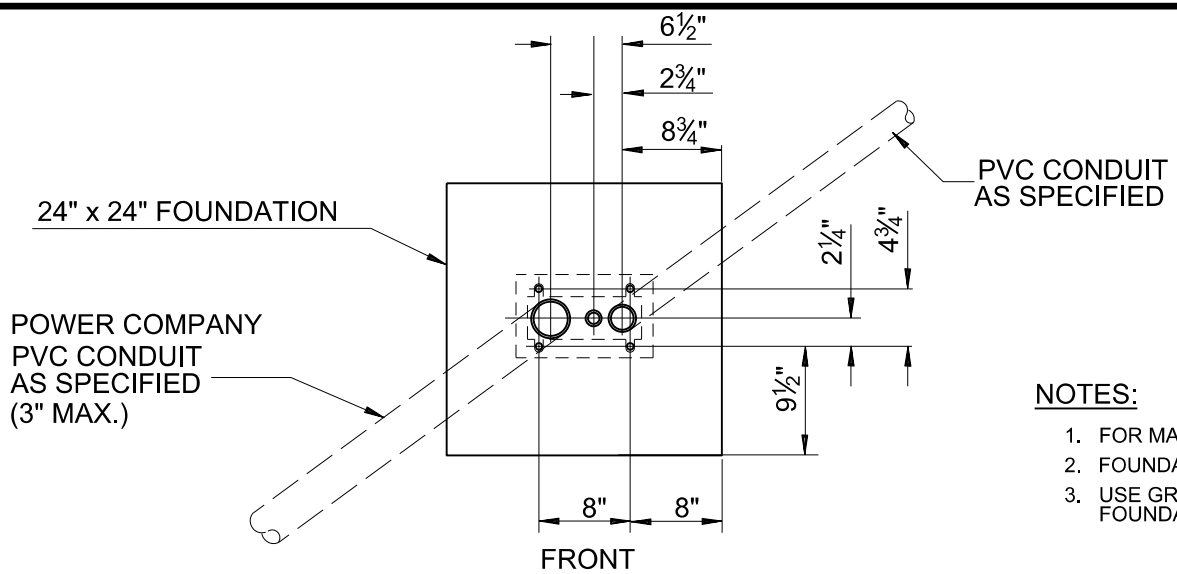

NOTES:

1. FOR MATERIAL AND CONSTRUCTION SPECIFICATIONS SEE SECTION 472.
2. FOUNDATIONS SHALL HAVE A ⅝" x 8' BONDED COPPER GROUND ROD.
3. USE GROUT OR MASTIC TO SEAL GAP BETWEEN SERVICE PEDESTAL AND FOUNDATION.

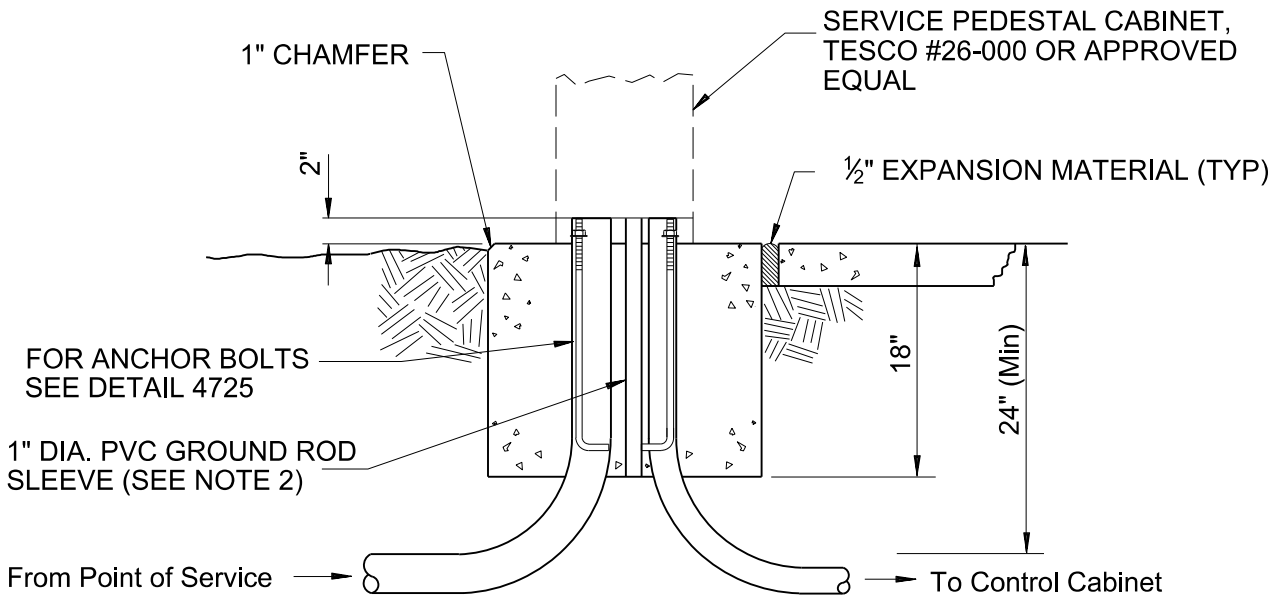

MARICOPA COUNTY DEPARTMENT OF TRANSPORTATION	SERVICE PEDESTAL FOUNDATION	DATE:	DETAIL NO.
STANDARD DETAIL		1/1/2011	4829-2

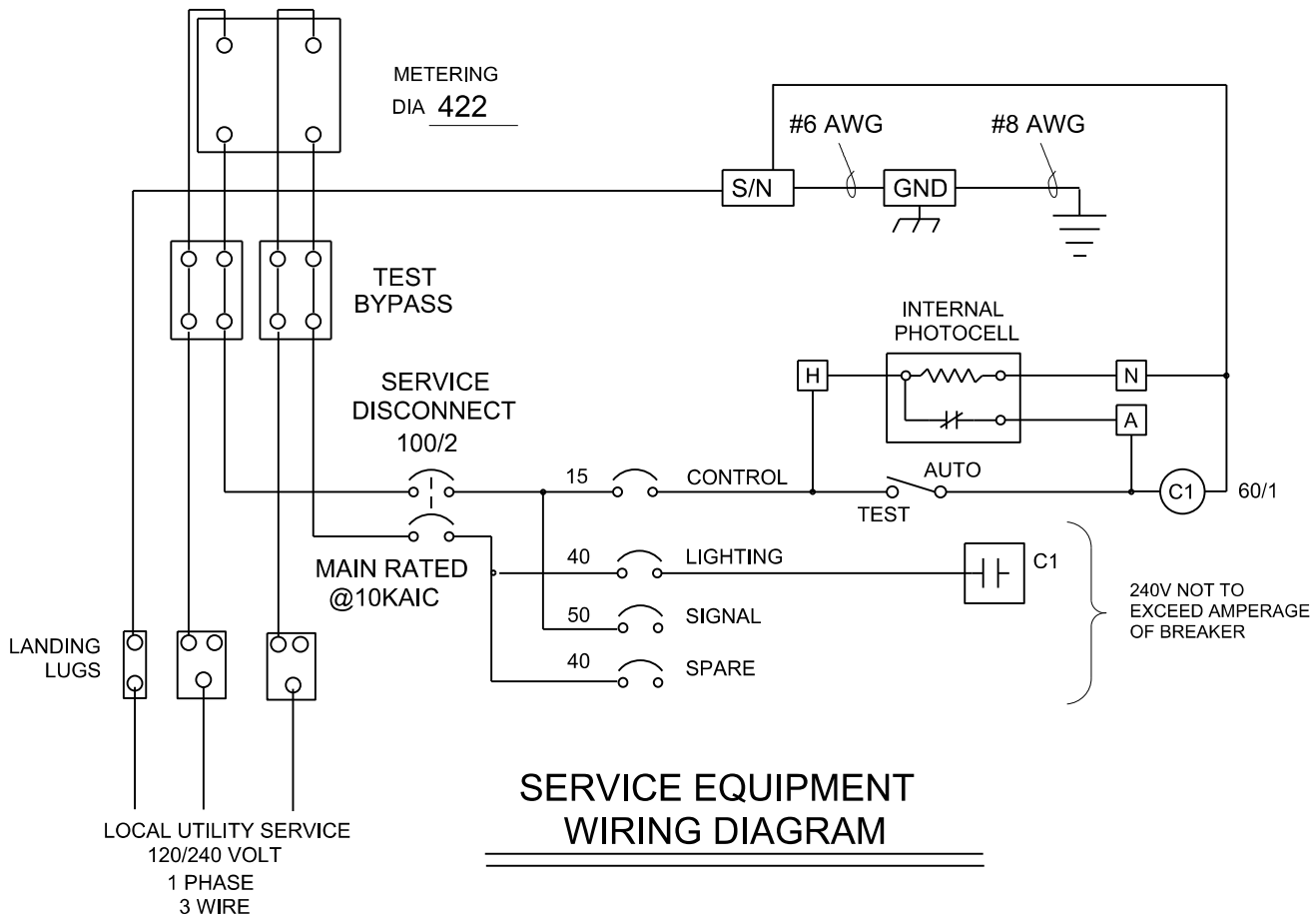

SERVICE EQUIPMENT WIRING DIAGRAM

NOTES:

1. SIGNAL AND LIGHTING SHALL BE WIRED ON SEPARATE PHASES.
2. LOAD CURRENT FOR ALL BREAKERS SHALL NOT EXCEED 80% OF BREAKER AMPERAGE.

MARICOPA COUNTY DEPARTMENT OF TRANSPORTATION	SERVICE PEDESTAL WIRING SCHEMATIC	DATE:	DETAIL NO.
STANDARD DETAIL		1/1/2011	4829-3

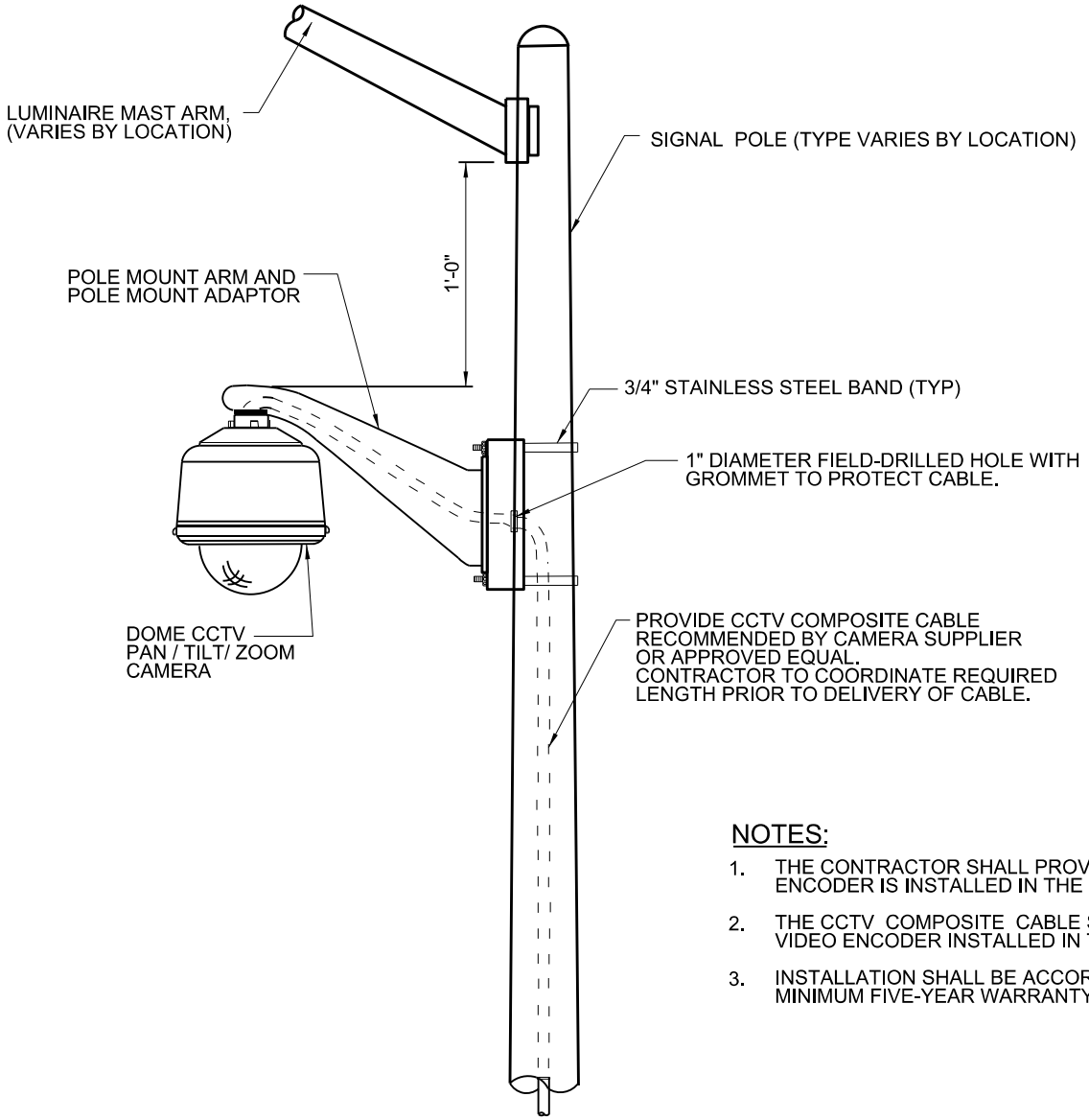

CCTV CAMERA
POLE MOUNTIING DETAIL

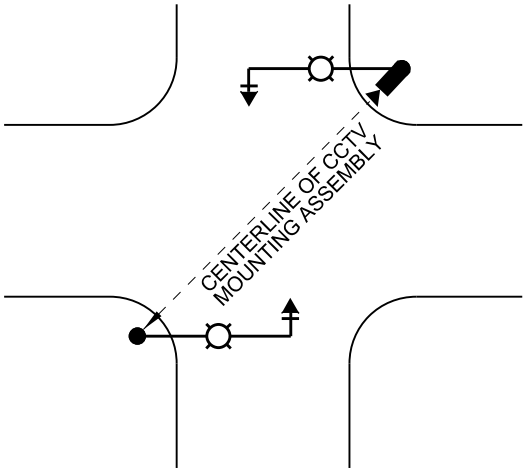

THE ROTATION OF THE CCTV CAMERA SHALL BE ALIGNED TO POINT AT THE TRAFFIC SIGNAL POLE ON THE DIAGONALLY OPPOSITE CORNER.

CCTV MOUNTING ASSEMBLY
ORIENTATION DETAIL

NOTES:

1. THE CONTRACTOR SHALL PROVIDE AND INSTALL A VIDEO ENCODER, AS SPECIFIED IN THE PLANS. ENCODER IS INSTALLED IN THE TRAFFIC SIGNAL CONTROL CABINET.
2. THE CCTV COMPOSITE CABLE SHALL RUN UNSPLICED FROM THE CCTV BACKBOX TO THE VIDEO ENCODER INSTALLED IN THE CONTROL CABINET.
3. INSTALLATION SHALL BE ACCORDING TO THE MANUFACTURE'S SPECIFICATIONS AND SHALL CARRY A MINIMUM FIVE-YEAR WARRANTY OF PARTS AND LABOR.

MARICOPA COUNTY DEPARTMENT OF TRANSPORTATION	CCTV CAMERA INSTALLATION ON SIGNAL POLE	DATE:	DETAIL NO.
STANDARD DETAIL		10/10/2013	4830

LEFT SIDE OF CABINET

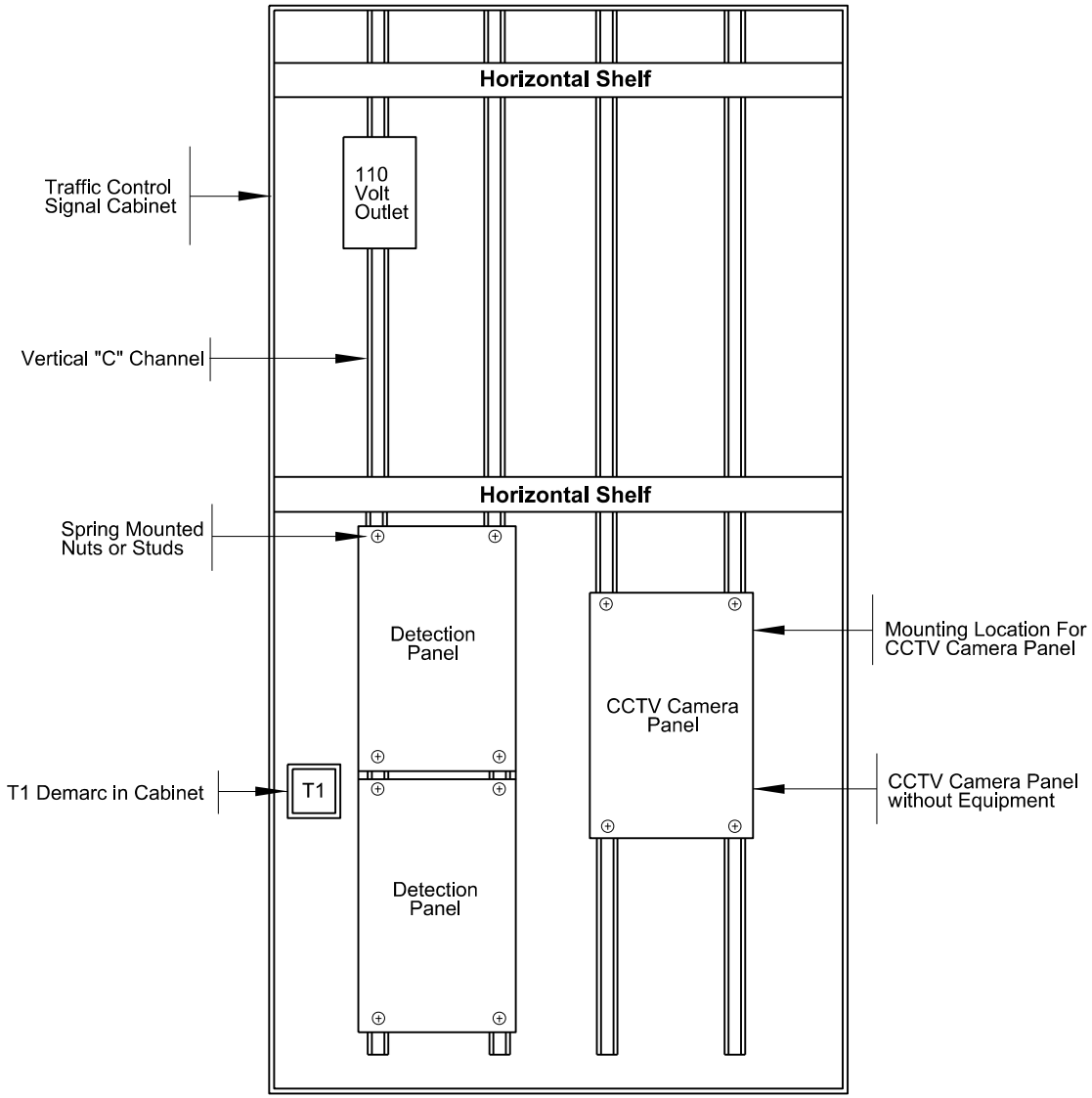

MARICOPA COUNTY DEPARTMENT OF TRANSPORTATION	ITS CCTV CAMERA PANEL LOCATION	DATE:	DETAIL NO.
STANDARD DETAIL		4/09	4831-1

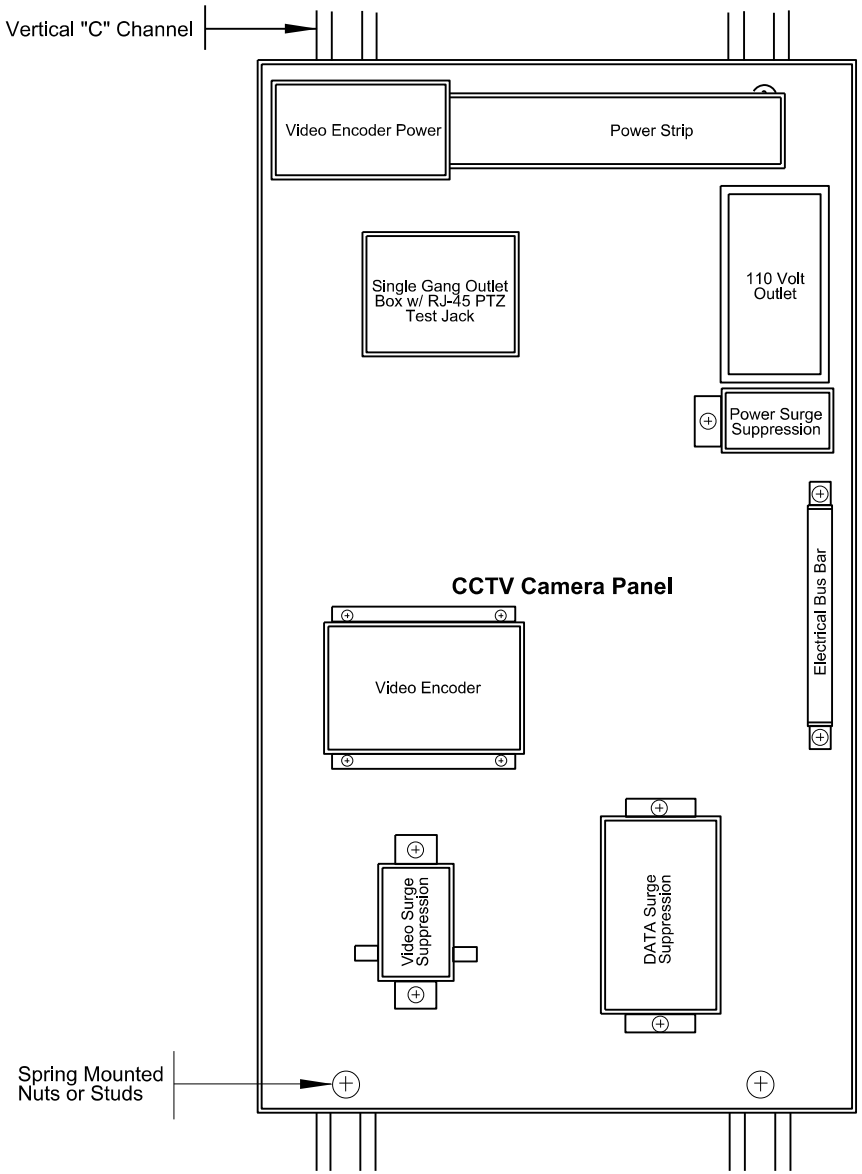

MARICOPA COUNTY DEPARTMENT OF TRANSPORTATION	ITS CCTV CAMERA PANEL DETAILS	DATE:	DETAIL NO.
STANDARD DETAIL		4/09	4831-2

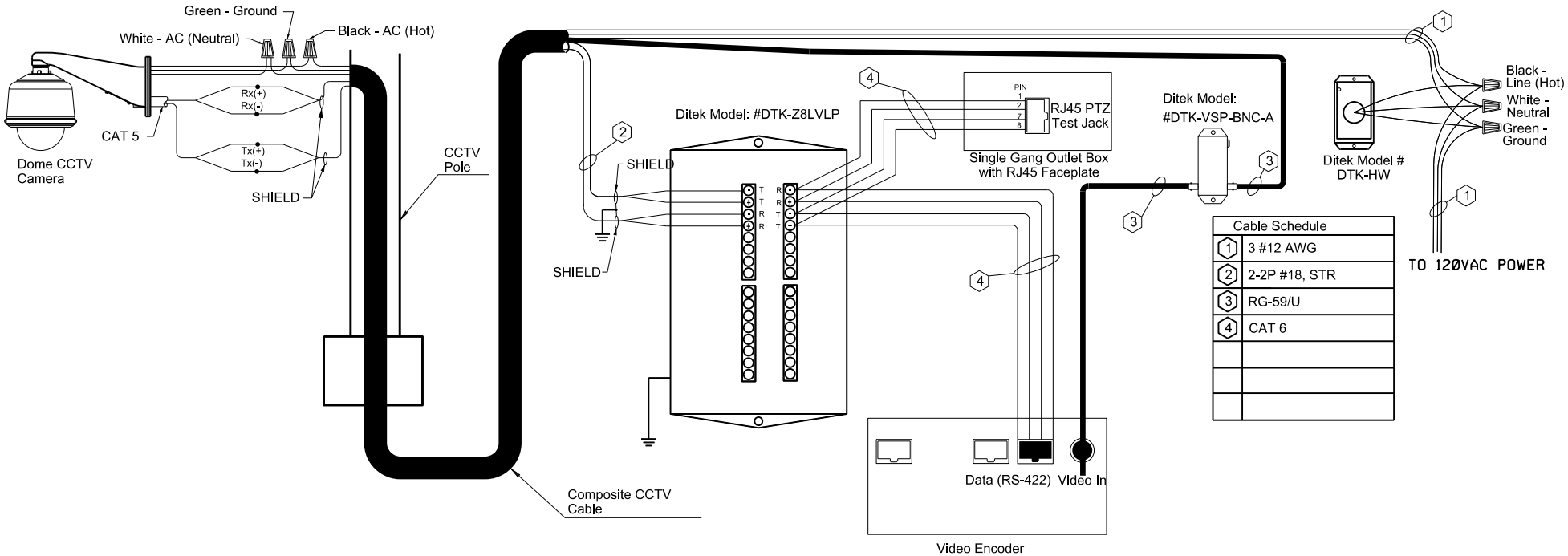

Cable Schedule	
1	3 #12 AWG
2	2-2P #18, STR
3	RG-59/U
4	CAT 6

MARICOPA COUNTY DEPARTMENT OF TRANSPORTATION	CCTV CAMERA WIRING SCHEMATIC	DATE:	DETAIL NO.
STANDARD DETAIL		4/09	4831-3

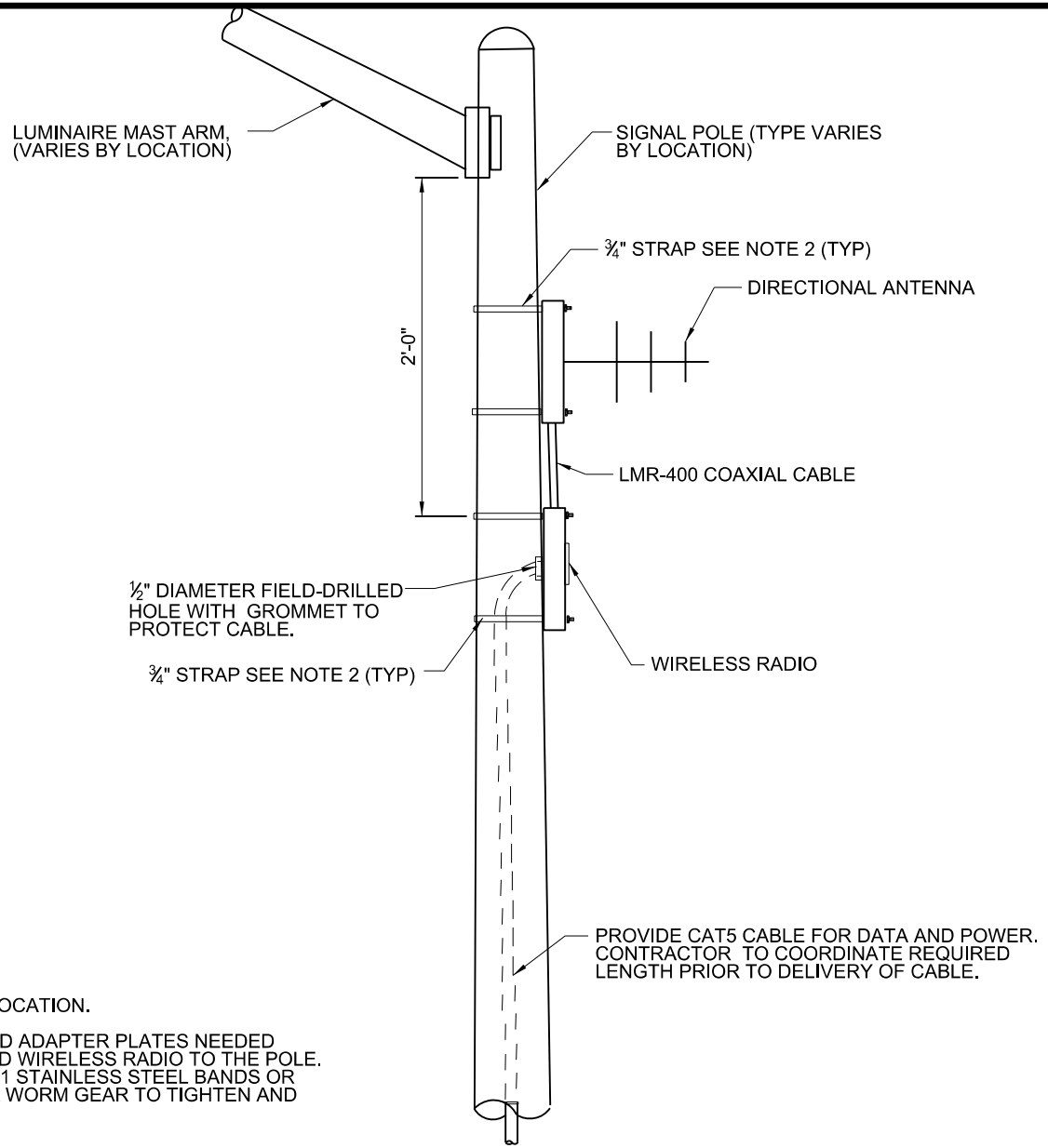

NOTES:

1. ORIENTATION OF ANTENNA VARIES BY LOCATION.
2. PROVIDE ALL MOUNTING HARDWARE AND ADAPTER PLATES NEEDED TO SECURELY MOUNT THE ANTENNA AND WIRELESS RADIO TO THE POLE. STRAPS SHALL BE 3/4" BAND-IT®TYPE 201 STAINLESS STEEL BANDS OR APPROVED EQUAL. STRAPS UTILIZING A WORM GEAR TO TIGHTEN AND HOLD THE STRAP SHALL NOT BE USED.

MARICOPA COUNTY DEPARTMENT OF TRANSPORTATION	MULTISERVICE RADIO INSTALLATION ON SIGNAL POLE	DATE:	DETAIL NO.
STANDARD DETAIL		4/09	4833

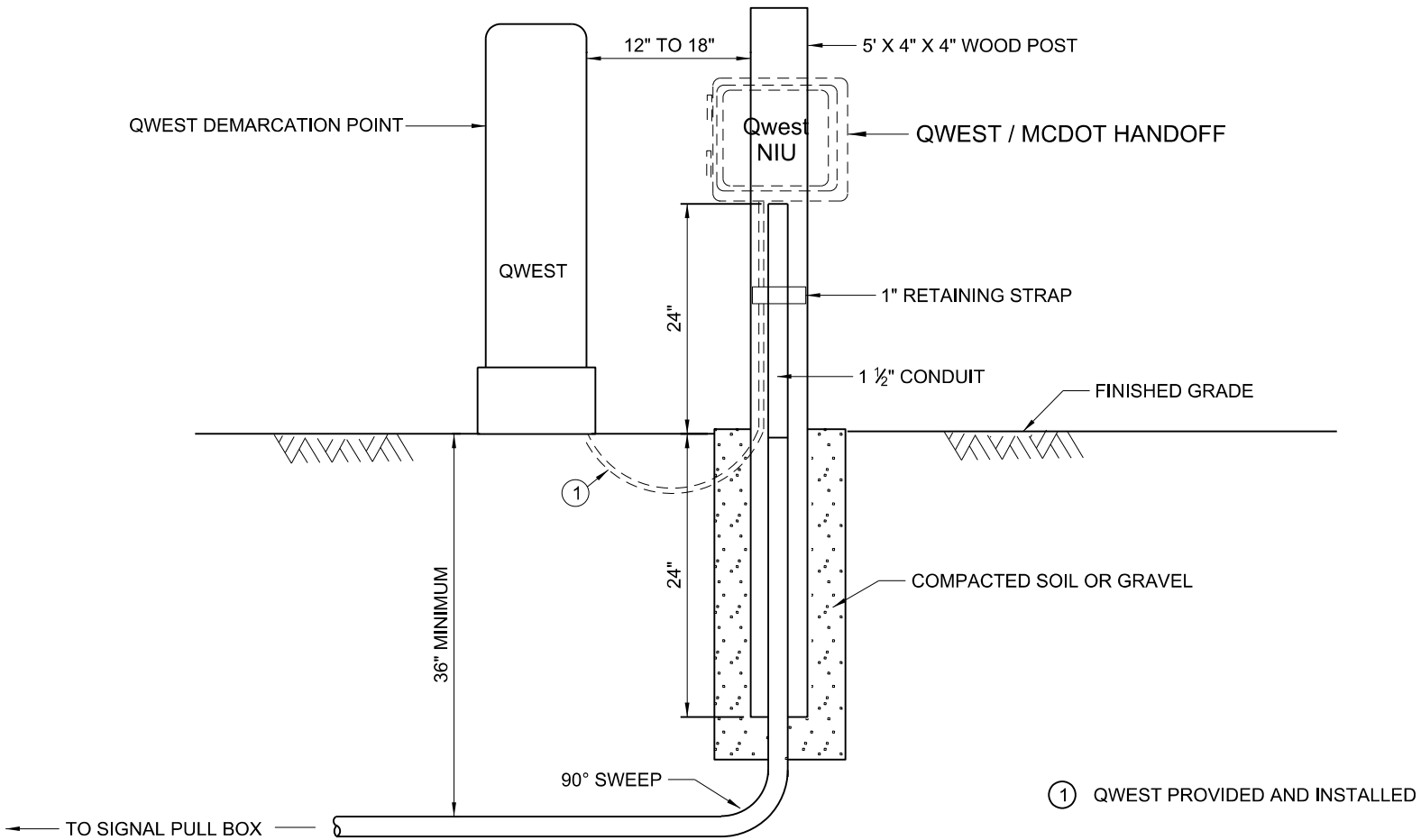

MARICOPA COUNTY DEPARTMENT OF TRANSPORTATION	4" X 4" POST WITH CONDUIT FOR T1 DEMARCATION POINT	DATE:	DETAIL NO.
STANDARD DETAIL		04/01/2009	4835

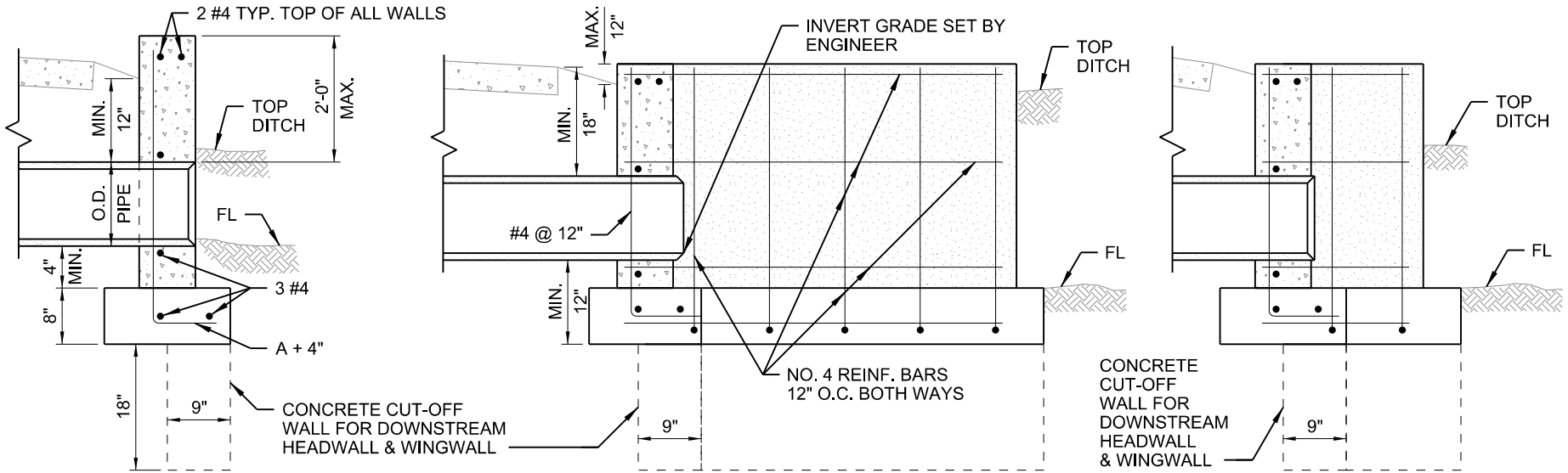

SECTION B-B

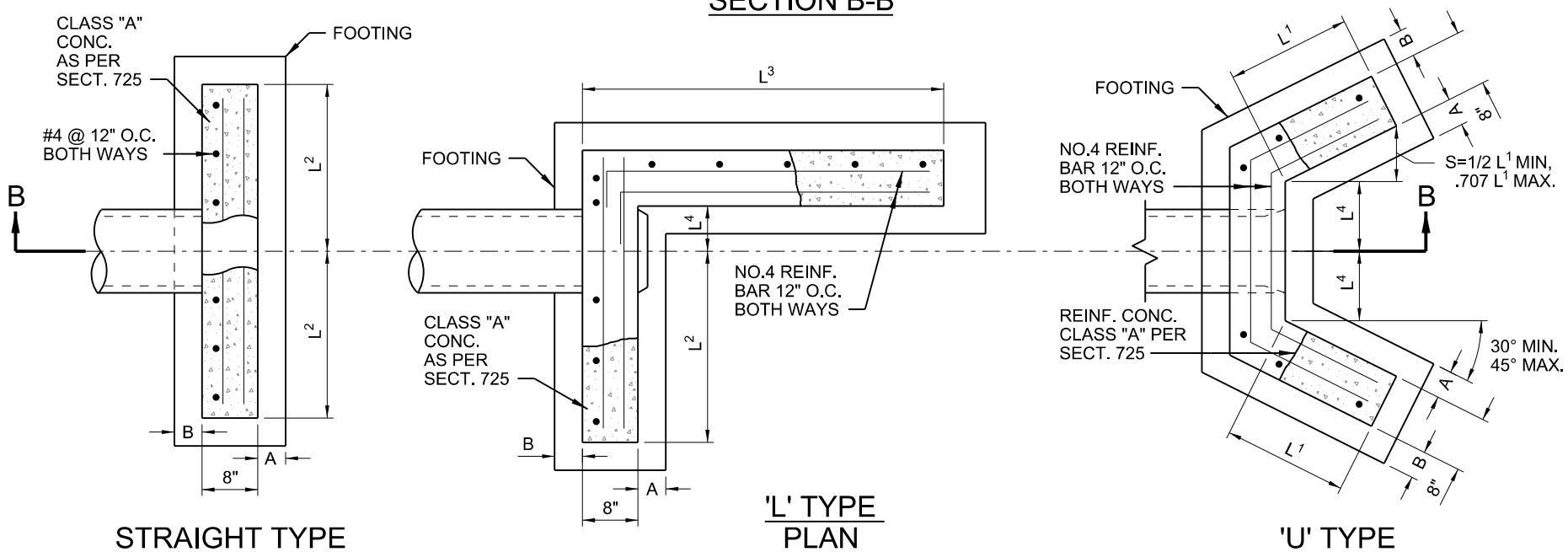

STRAIGHT TYPE

'L' TYPE PLAN

'U' TYPE

MARICOPA COUNTY DEPARTMENT OF TRANSPORTATION	HEADWALL	DATE:	DETAIL NO.
STANDARD DETAIL		01/01/2019	5524-1

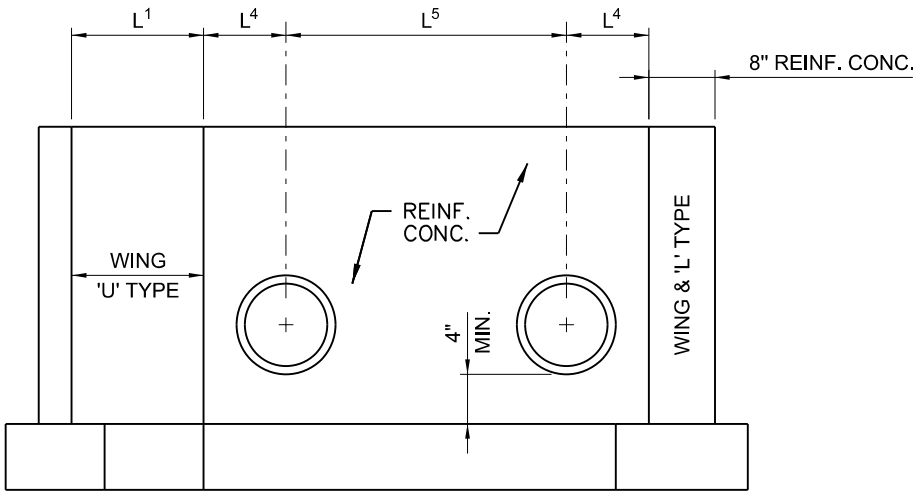

DOUBLE PIPE HEADWALL

** FOR (3) OR MORE PIPES USE L^5 SPACING OF PIPES.

HEADWALL DIMENSIONS							
* NOMINAL PIPE SIZE	L^1	L^2	L^3	L^4	L^5	A	B
12"	1'-4"	2'-0"	3'-8"	0'-10"	2'-9"	6"	10"
15"	2'-0"	2'-8"	4'-0"	1'-0"	3'-0"	6"	10"
18"	2'-0"	3'-8"	4'-8"	1'-2"	3'-3"	6"	10"
21"	2'-8"	4'-0"	5'-4"	1'-3"	3'-6"	8"	1'-0"
24"	2'-8"	4'-0"	5'-4"	1'-6"	4'-0"	8"	1'-0"
30"	2'-8"	5'-4"	6'-8"	1'-10"	4'-6"	10"	1'-2"
36"	3'-4"	6'-8"	8'-0"	2'-0"	5'-0"	1'-0"	1'-4"
42"	4'-0"	8'-0"	9-4"	2'-2"	5'-6"	1'-2"	1'-6"

* NOMINAL PIPE SIZE GIVEN FOR REINFORCED CONCRETE PIPE.

NOTES:

1. DESIGN SPECIFICATIONS - AASHTO LRFD BRIDGE DESIGN SPECIFICATIONS, 8TH EDITION 2017.
2. LOADING CLASS - HL-93.
3. DESIGN SOIL WEIGHT = 120 P.C.F.
4. ALL CONCRETE SHALL BE CLASS 'A' PER SECTION 505 & 725.
5. REINFORCING STEEL SHALL CONFORM TO ASTM SPECIFICATIONS A615. ALL REINFORCING SHALL BE FURNISHED AS GRADE 60.
6. ALL BENDS AND HOOKS SHALL MEET THE REQUIREMENTS OF AASHTO LRF ARTICLE 5.10. ALL BEND DIMENSIONS FOR REINFORCING STEEL SHALL BE OUT-TO-OUT OF BARS. ALL PLACEMENT DIMENSIONS FOR REINFORCING STEEL SHALL BE TO CENTER OF BARS UNLESS NOTED OTHERWISE.
7. CONCRETE REINF. SHALL BE NO.4 BAR 12" O.C. BOTH WAYS.
8. ALL REINFORCING STEEL SHALL HAVE 2 INCH CLEAR COVER UNLESS NOTED OTHERWISE.
9. CHAMFER ALL EXPOSED CORNERS 3/4" UNLESS NOTED OTHERWISE.
10. DISTURBED AREA OF PIPE SHALL BE TREATED IN ACCORDANCE WITH STANDARD SPECIFICATIONS REQUIREMENTS WHEN END OF PIPE IS CUT TO FIT SKEW OR SLOPE.
11. COMPACT BACKFILL FOR FOOTING AND WING BASE MINIMUM 95 PERCENT OF ASTM D698 MAXIMUM DRY DENSITY.
12. SEE PROJECT PLANS FOR CULVERT LAYOUT INVERT ELEVATIONS, FINISHED GRADE AND OTHER SITE SPECIFIC DETAILS.
13. INSTALL SAFETY RAIL PER MAG STD DETAIL 145 WHERE INDICATED ON THE PLANS.
14. DIMENSIONS SHALL NOT BE SCALED FROM DRAWINGS.

MARICOPA COUNTY DEPARTMENT OF TRANSPORTATION	HEADWALL	DATE:	DETAIL NO.
STANDARD DETAIL		01/01/2019	5524-2

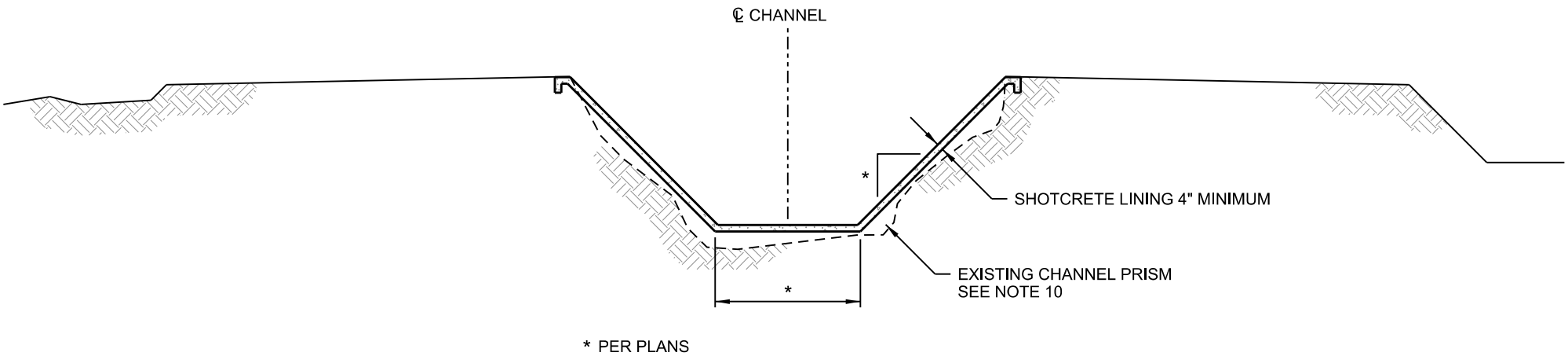

CHANNEL LINING SECTION

NOTES

1. ALL CONCRETE FOR LINING SHALL BE 4" THICK MINIMUM SHOTCRETE (CLASS A PER MAG STANDARD SPECIFICATION SECTION 725) WITH FIBEROUS REINFORCEMENT.

2. HAND-PLACED LINING SHALL BE CLASS "A" PER MAG STANDARD SPECIFICATION SECTION 725 WITH FIBEROUS REINFORCEMENT.

3. THE JOINT SEALENT SHALL BE POURED TYPE CONFORMING TO MAG STANDARD SPECIFICATION SECTION 729 OR APPROVED EQUIVALENT.

4. FIBEROUS REINFORCEMENT SHAL HAVE THE FOLLOWING CHARACTERISTICS:
   a. SPECIFIC GRAVITY 0.91
   b. TENSILE STRENGTH 55ksi
   c. FIBER LENGTH GRADED 1/4" TO 3/4"

   THE APPLICATION RATE FOR THE FIBERS IS 1.5 POUNDS PER CUBIC YARD.

5. CONTRACTION JOINTS IN CONCRETE LINING SHALL BE CONSTRUCTED TRANSVERSELY AT 10 FOOT INTERVALS AND CONSTRUCTED PER MAG STANDARD SPECIFICATION 324.3.9.

6. EXPANSION JOINTS ARE REQUIRED AT 40 FOOT INTERVALS AND AT ANY LOCATION WHERE LINING ABUTS NEW OR EXISTING STRUCTURES AND SHALL BE CONSTRUCTED PER MAG STANDARD SPECIFICATION 324.3.9.

7. CONSTRUCTION JOINTS ARE REQUIRED WHEREVER THE CHANNEL LINING PROCESS RESUMES AFTER CONCRETE/SHOTCRETE HAS HARDENED.

8. BACKER ROD SHALL CONFORM TO MAG STANDARD SPECIFICATION SECTION 729 OR APPROVED EQUIVALENT. INSTALL BACKER ROD IN JOINT PER MANUFACTURER'S INSTRUCTIONS.

9. 6x6-W2.9xW2.9 WELDED WIRE FABRIC MAY BE USED AS AN ALTERNATE TO FIBEROUS REINFORCEMENT.

10. FILL AND BACKFILL SHALL BE PLACED AND COMPACTED TO 95% MINIMUM UNIFORM DENSITY PER MAG STANDARD SPECIFICATION 211.2 AND 211.3.

11. CONTRACTOR SHALL SHAPE, TRIM AND COMPACT CANAL PRISM AS NECESSARY PER MAG STANDARD SPECIFICATION 215.

12. SEE PLAN NOTES FOR ADDITIONAL INFORMATION AND REQUIREMENTS.

MARICOPA COUNTY DEPARTMENT OF TRANSPORTATION	CHANNEL LINING	DATE:	DETAIL NO.
STANDARD DETAIL		01/01/2020	5560-1

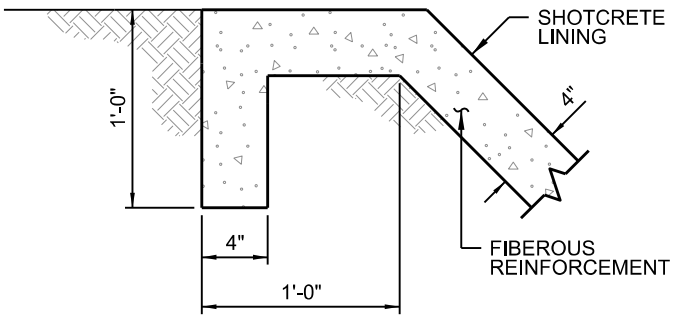

BERM

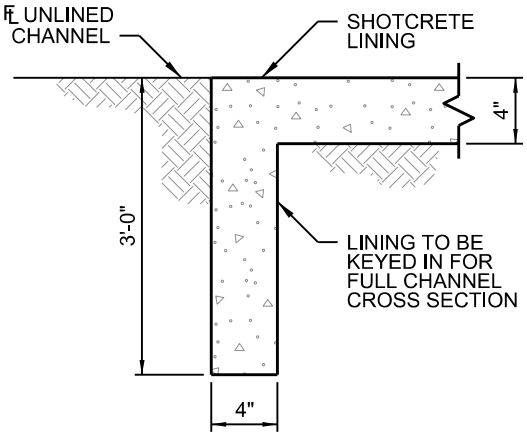

UNLINED CHANNEL TIE-IN

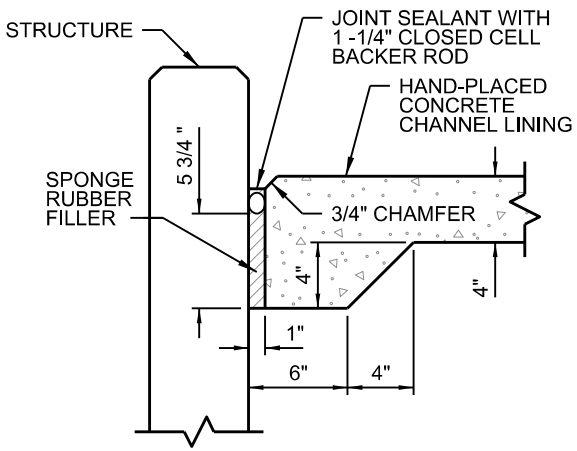

EXPANSION JOINT

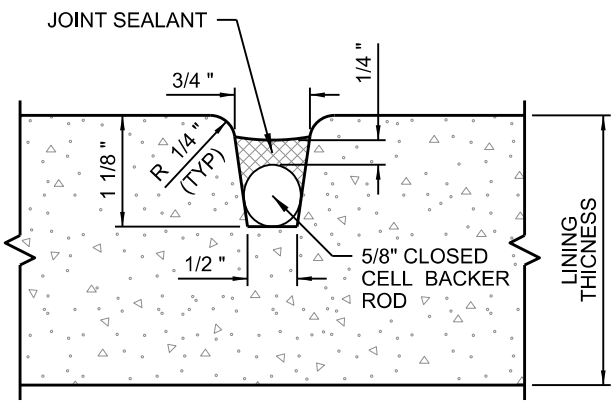

CONTRACTION JOINT

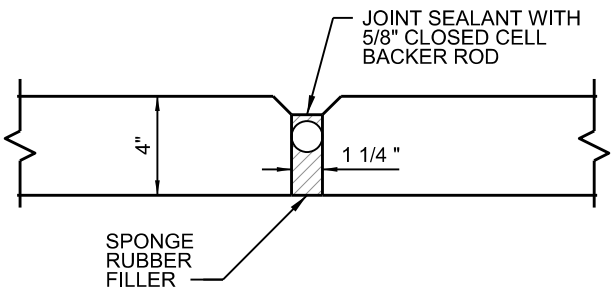

EXPANSION JOINT

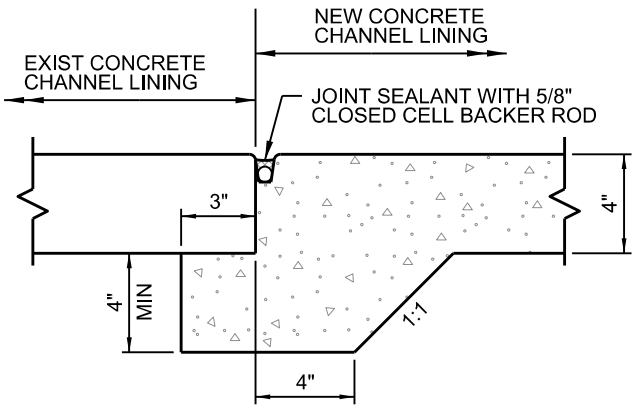

CONSTRUCTION JOINT

MARICOPA COUNTY DEPARTMENT OF TRANSPORTATION	CHANNEL LINING	DATE:	DETAIL NO.
STANDARD DETAIL		01/01/2020	5560-2