# Mobile Food Type III

## Information regarding State Licensure:

The initial permitting approval is conducted in the county where the commissary is located. A vendor that is issued a permit in accordance with the state licensing requirements and is operating within the limitations of the permit type that was issued may submit their application, supporting documentation (menu, commissary agreement, toilet use agreement, photos of unit, and route sheet/location of operation), and permit fee electronically to the Maricopa County Environmental Services Department (Department). The Department will review the information provided and if approved, will mail back the permit card and permit plate that is to be affixed to the permitted vehicle. A commissary agreement may still be required within Maricopa County based on the nature of the operation. No plan review/plan review fee/facility inspections are required for those units that have been approved in accordance with state licensing requirements.

## Definitions

"Mobile Food Unit" means a food establishment that is licensed by this state, that is readily movable and that dispenses food or beverages for immediate service and consumption and other incidental retail items from any vehicle as defined in Section 28-101 (see definition below).

"Mobile Food Type III" means an enclosed vehicle-mounted food establishment that prepares, cooks, holds and serves food.

"Vehicle" means a device in, on or by which a person or property is or may be transported or drawn on a public highway, excluding devices moved by human power or used exclusively on stationary rails or tracks.

"Commissary" means a food establishment that acts as a base of operation for a mobile food establishment, food vending establishment or an adventure food establishment.

## Additional permit requirements

The Type III is limited to food preparation that is simplified to reduce excessive steps so as to ensure contamination does not occur. Excessive steps include, but are not limited to, cooking overnight without oversight, cooling, or cutting large volumes of food items on the unit. These complex/excessive steps may be approved in a commissary or other permitted permanent food establishment.

All produce must be purchased commercially pre-washed or be washed in advance at a permitted food establishment/ commissary. Produce may not be washed in the unit unless an approved prep sink has been installed.

All time/temperature control for safety foods shall be prepared on the same day of sale or service. Time/temperature control for safety foods shall not be held over from a previous day's operation unless otherwise approved by the Department.

All food held for consumer self-service shall be wrapped or effectively dispensed to protect from contamination.

All cooking, processing, preparing, grilling, assembly, storage, and service of any food or beverage shall be conducted inside the permitted vehicle.

## Plan review submittal requirements

If the unit has a current issued permit in another county in Arizona in accordance with state licensing requirements or has had a permit in Maricopa County within the last 3 years then a plan review is not needed, provided the cart/unit has not been modified and is operating within the limitations of this permit type.

The following will need to be provided for review to the Department:

- ◊ Complete set of plans to scale that are legible on 8.5"X11" paper
- ◊ Plan Review Fee ($75/unit—standard review; $150/unit—expedited review)
- ◊ Top View Layout/Equipment
- ◊ Side View Plumbing Schematic
- ◊ Proposed Menu (describe concepts)
- ◊ Fresh Water Tank Dimensions (30 gallons)
  - ◊ If prep-sink is installed, 20 gallons additional fresh water is required
- ◊ Waste Water Tank Dimensions (15% greater than the fresh water tank)
- ◊ Hand Wash Sink Dimensions (9" x 9"x 5")
- ◊ Combination mixing faucet of hot & cold water at the sink
- ◊ Fresh Water inlet no greater than ¾ inch
- ◊ Waste Water drain valve greater than 1 inch
- ◊ 3-Compartment Sink
  - ◊ 6-gallon basin capacity
  - ◊ Minimum flow rate of ½ gallon per minute
  - ◊ Water temperature at least 100°F
  - ◊ 2-integral metal drain boards that are sized at least at 144 square inches
- ◊ All plumbing connections shall be different sizes
- ◊ Waste water tank on drain at lowest point of tank
- ◊ Water continuous & evacuated by opening valve
- ◊ Tanks fill connection at top or higher point
- ◊ NSF or FDA approved water hose (food grade)
- ◊ Water Heater or other approved hot water source
- ◊ Quick-Disconnect design (sewer & potable water)
- ◊ Food service window openings are limited to 324 square inches, equipped with a screen
  - ◊ Multiple window opening shall be at least 18 inches apart
- ◊ Design & Construction Materials used
- ◊ Food Contact Surface Materials
- ◊ Food Protection, Sneeze-Guards
- ◊ Storage Equipment/Steam Table
- ◊ All Equipment NSF/ANSI approved
- ◊ Lighting (50-ft candles)

Note: Once the plans have been reviewed, a stipulation approval letter will be sent to you and detail any modifications/additional information that may be required. Once all items have been received, an inspection can be scheduled at the Mobile Food/Special Events office.

**Prior to the issuance of the permit, the inspector will verify construction of truck/unit meets code requirements in addition to reviewing/verifying the following have been provided:**

- Business Name on 2 sides and rear (3" high x 3/8 wide)
  - If owner has more than one permitted unit, each unit must bear a unique identifier (e.g. Lunch Truck #1, etc.)
- Commissary Agreement
- Toilet Use Agreement
- Route Sheet/Location of Operation
- Certified Manager Certificate
- Thermometers
- Generators/Power Source
- Pictures of unit

- Note: An in-office pre-approval inspection is not required for those units that are currently permitted under the state licensing requirements.

**Permit renewal information**

- Renewals are done at the Mobile Food/Special Events Office
  - Appointments may be scheduled between 8AM-11AM, Monday – Friday
  - Inspections are conducted (without appointment) between 12PM-5PM
- The following must be brought to office for renewal:
  - Permitted truck/unit
  - Commissary Agreement
  - Route Sheet/Location of Operation/Farmers' Market Calendar
  - Thermometers
  - Generators/Power Source
  - Updated menu

- Note: Please contact the Mobile Food/Special Events office to confirm that an in-office renewal inspection is required.

**Inspection information**

- Inspections are conducted at the Mobile Food/Special Events Office
  - Appointments may be scheduled between 8AM-11AM, Monday – Friday
  - Inspections are conducted (without appointment) between 12PM-5PM
- A permit will be issued once all items have been verified and approved for use.

**Permit fees**

- Permits are issued for 1 year
  - 1 year - $610

**Plan Submittal Example**

ES Foods (Page 1 of 3)

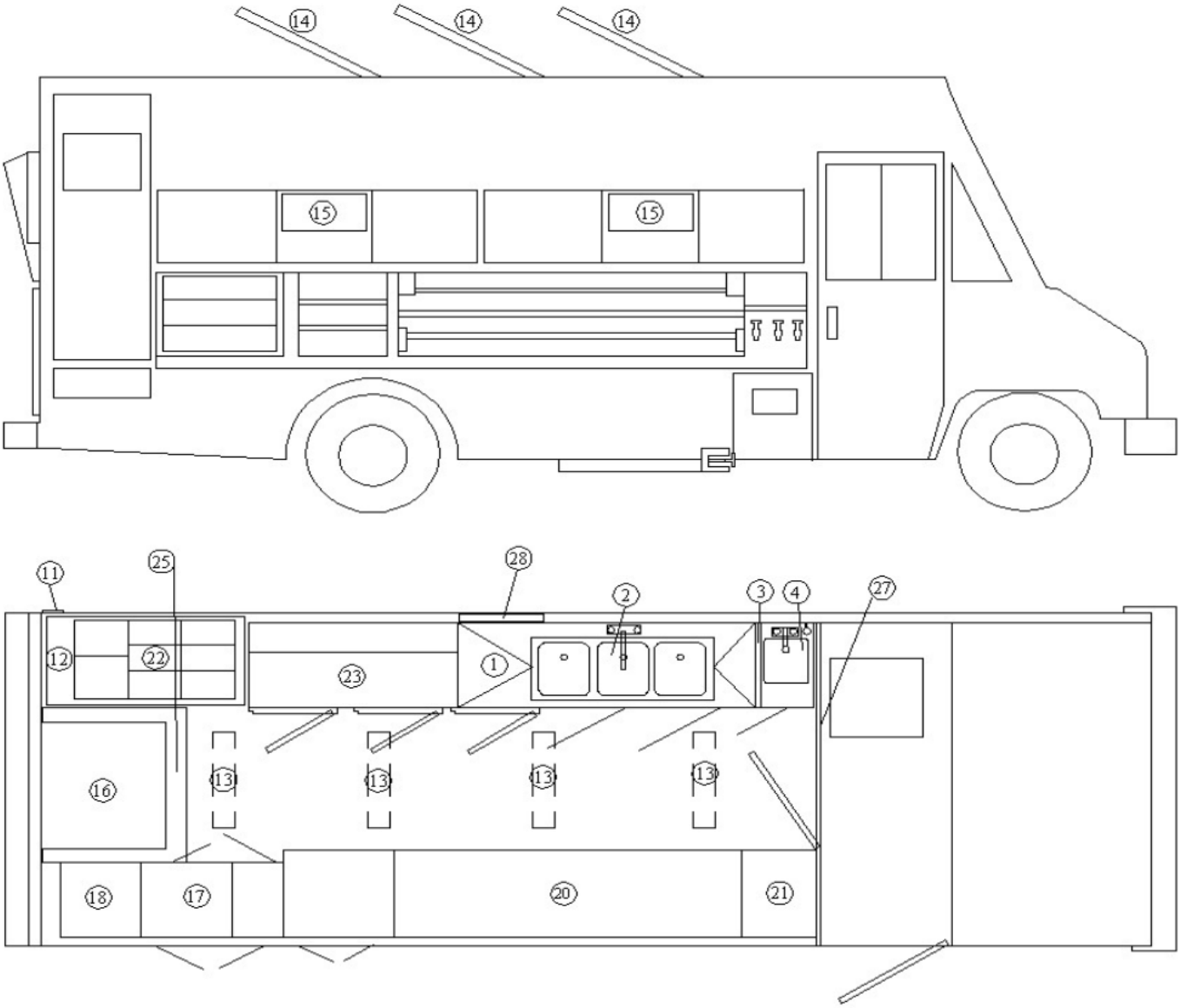

# Plumbing Schematic Examples

ES Foods (Page 2 of 3)

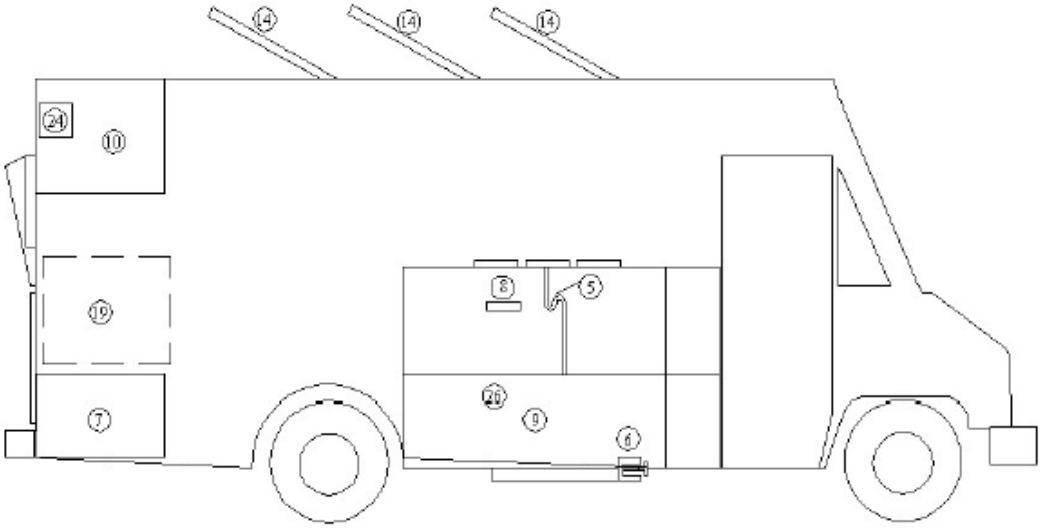


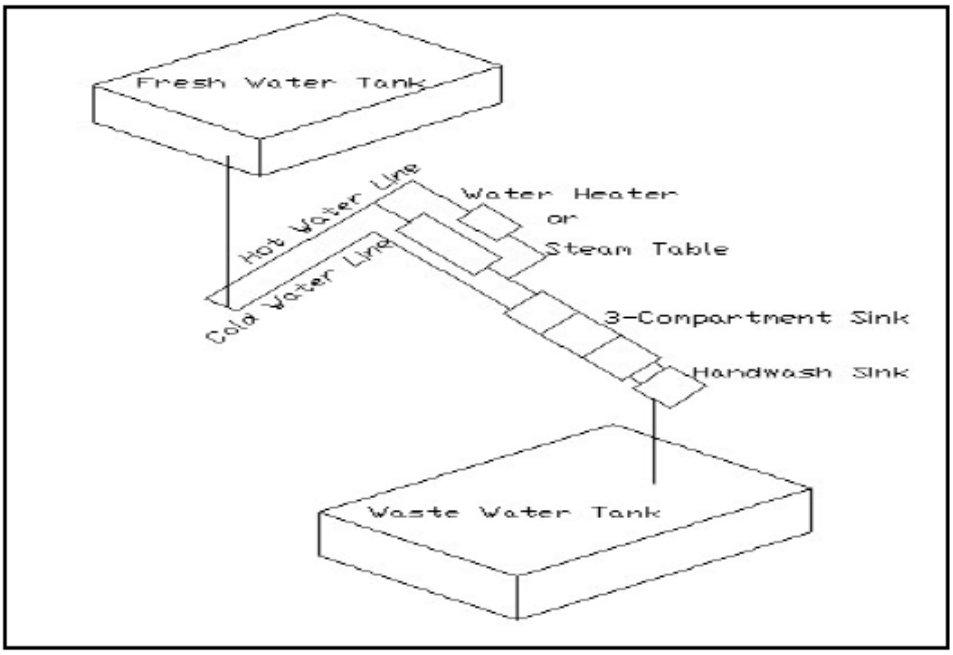

## Plan Submittal Example



1. Steel storage compartment for chemical storage
2. NSF approved, 3-compartment sink with 12” x 12”x 10” compartments, 12” faucet, and two (12” x 12” = 144” square inches) drain boards sloped to drain.
3. 12” splashguard between hand sink and 3-compartment sink
4. Hand sink with 9” x 9” x 5” with 4” faucet
5. P-trap assembly
6. 4” drain valve
7. 6-Gallon water heater (on floor)
8. Demand Pump—1.34 gpm with check valve
9. 45-Gallon wastewater tank, sloped to drain at 1/2 inch per foot.
10. 30-Gallon steel potable water tank, food grade, corrosion resistant
11. Potable water fill—3/4” inlet valve with screw cap, check valve, water inlet is 2” above vent line
12. Vent line. Both the vent line exit and potable water fill inlet are in a stainless steel box with door. The vent line terminates downward.
13. Shielded dome lights that delivers 50 foot candles light
14. Sky lights with screens—16 mesh per inch. Sky lights can be opened for make-up air for hood.
15. Serve out windows (12” H x 18 W” with 16 mesh per inch self-closing screen doors)
16. Propane grill (36” W x 36” H x 18” D with waste container beneath)
17. NSF approved refrigerator (24” W x 24” D x 36” H)
18. Steel table (24” W x 24” D x 36” H)
19. Steel enclosed generator compartment, completely sealed from interior of trailer.
20. Dry storage steel shelving unit
21. NSF approved freezer unit (24” W x 24” D x 36” H)
22. NSF Approved hot holding cabinet (30” W x 36” H x 18” D)
23. NSF approved refrigerator (30”W x 48” H x 18”D)
24. Overflow device located 2” below water inlet on tank
25. Type one high velocity hood assembly. Hood has a 6” overhang of grill and is made completely with steel. Base of hood to cooking surface is 3 feet. Hood uses vertically positioned hood baffles sloped to at least a 45 degree angle from horizontal. A grease collection tray and cup is used. Hood in accordance with latest edition of uniform mechanical code.
26. Outlet for vent line from waste tank.
27. Partition separating cabin and kitchen area.
28. “Screened” vent window.

**Mobile Food/Special Events Office**
1645 E. Roosevelt Street
Phoenix, AZ 85006
602.506.6872
esplanreview@mail.maricopa.gov