Maricopa County Zoning Ordinance

Maricopa County Planning and Development Department
411 North Central, Third Floor
Phoenix, AZ 85004-2191

February 2003

Maricopa County

MARICOPA COUNTY ZONING ORDINANCE

Table of Contents

CHAPTER 1 – INTRODUCTORY PROVISIONS		
Section		**Page**
101	Title	1
102	Declaration	1
103	Effective Date	1
104	Purpose	1
105	Interpretation	2
106	Separability Clause	2
107	Repeal of Conflicting Ordinances	2
108	General Rules for Construction of Language	3
CHAPTER 2 – DEFINITIONS		
Section		**Page**
201	Definitions	1
CHAPTER 3 – ADMINISTRATION		
Section		**Page**
301	Board of Supervisors - Reserved	1
302	Planning and Zoning Commission - Reserved	1
303	Board of Adjustment	1
304	Amendments	4
305	Citizen Review Process	11
CHAPTER 4 – ZONING		
Section		**Page**
401	Establishment of Zoning Districts and Boundaries Thereof	1
402	Boundaries	3
403	Lands Not Previously Zoned	4
404	Lands Previously Zoned by Other Jurisdictions	4
405	Lots Divided by Zoning District Boundaries	5
CHAPTER 5 – RURAL ZONING DISTRICTS		
Section		**Page**
501	Rural-190 – 190,000 Square Feet Per Dwelling Unit	1
502	Rural-70 – 70,000 Square Feet Per Dwelling Unit	8
503	Rural-43 – One Acre Per Dwelling Unit	9
CHAPTER 6 – SINGLE FAMILY RESIDENTIAL ZONING DISTRICTS		
Section		**Page**
601	R1-35 – 35,000 Square Feet Per Dwelling Unit	1
602	R1-18 – 18,000 Square Feet Per Dwelling Unit	8
603	R1-10 – 10,000 Square Feet Per Dwelling Unit	9

Table of Contents

604	R1-8 – 8,000 Square Feet Per Dwelling Unit	11
605	R1-7 – 7,000 Square Feet Per Dwelling Unit	12
606	R1-6 – 6,000 Square Feet Per Dwelling Unit	13
CHAPTER 7 – MULTIPLE FAMILY RESIDENTIAL ZONING DISTRICTS		
Section		**Page**
701	R-2 – Two Family Residential	1
702	R-3, R-4, R-5 – Multiple Family Residential	3
CHAPTER 8 – COMMERCIAL ZONING DISTRICTS		
Section		**Page**
801	C-S – Planned Shopping Center	1
802	C-O – Commercial Office	4
803	C-1 – Neighborhood Commercial	9
804	C-2 – Intermediate Commercial	14
805	C-3 – General Commercial	21
CHAPTER 9 – INDUSTRIAL ZONING DISTRICTS		
Section		**Page**
901	Ind-1 – Planned Industrial	1
902	Ind-2 – Light Industrial	7
903	Ind-3 – Heavy Industrial	14
CHAPTER 10 – OVERLAY ZONING DISTRICTS		
Section		**Page**
1001	PAD – Planned Area Development Overlay	1
1002	RUPD – Residential Unit Plan of Development	5
1003	CUPD – Commercial Plan of Development	7
1004	IUPD – Industrial Plan of Development	9
1005	PD – Planned Development Overlay	11
1006	SC – Senior Citizen Overlay	14
1007	Westside Military Airbase	16
1008	Wickenburg Scenic Corridor	21
1009	Hwy 74 Scenic Corridor	28
CHAPTER 11 – GENERAL REGULATIONS		
Section		**Page**
1101	Applying General Provisions	1
1102	Parking Regulations	1
1103	Loading and Unloading Regulations	7
1104	Right of Way Acquisition	8
1105	Setback Lines	8
1106	Accessory Buildings and Uses	9

Table of Contents

1107	Number of Principal Buildings on a Lot	10
1108	Adjustment Permitting an Additional Dwelling Unit	10
1109	Additional Lot Area and Dimension Regulations	10
1110	Additional Yard and Open Space Regulations	11
1111	Additional Height Regulations	12
1112	Outdoor Light Control Provisions	16
1113	Flood Control Regulations	20
1114	Location of Mobile Homes, Travel Trailers, Aircraft, Boats, Camping Trailers, Truck Campers & Motor Homes	21
1115	Amateur Radio Antennas and Antenna Support Structures	21
CHAPTER 12 – DEVELOPMENT REGULATIONS		
Section		**Page**
1201	Hillside Development Standards	1
1202	Wireless Communication Facilities	8
1203	Mobile Home Parks	15
1204	Protected Development Rights	18
1205	Drainage Provisions	20
CHAPTER 13 – USE REGULATIONS		
Section		**Page**
1301	Special Uses	1
1302	Temporary Uses	10
1303	Conditional Uses	14
1304	Exempted Uses	17
1305	Nonconforming Uses	18
CHAPTER 14 – SIGN REGULATIONS		
Section		**Page**
1401	Rural Zoning Districts	1
1402	Single Family Residential Zoning Districts	6
1403	Multiple Family Residential Zoning Districts	11
1404	Commercial Zoning Districts	13
1405	Industrial Zoning Districts	30
1406	Overlay Zoning Districts	40
1407	Mobile Home Parks	41
1408	Additional Sign Regulations	42
CHAPTER 15 – VIOLATION, PENALTY AND ENFORCEMENT		
Section		**Page**
1501	Violation, Penalty and Enforcement	1
1502	Violation	2

Table of Contents

1503	Penalty	2
1504	Enforcement	3
CHAPTER 16 – FEES		
Section		**Page**
1601	Purpose	1
1602	Fees	1
1603	Appeals	3
1604	Application Fees for Variance	3
1605	Use Permits	4
CHAPTER 17 – INDEXES AND APPENDICES		
Section		**Page**
1701	Reference Index	1
1702	Appendices	6
1703	Revisions/Additions	7

MARICOPA COUNTY ZONING ORDINANCE

Chapter 1 – Introductory Provisions

SECTION 101. SHORT TITLE[*1]

This Ordinance may be cited as "*The Zoning Ordinance for the Unincorporated Area of Maricopa County*".

Date of Revisions			
*1	Revised 4-01-85		

SECTION 102. DECLARATION

An Amended Zoning Ordinance for the Unincorporated Area of Maricopa County, Arizona, dividing the unincorporated area of said county into zoning districts appropriate for various classes of residential, business and industrial uses; providing for the establishment of setback lines; providing for adequate light, air, and parking facilities; providing for expediting traffic within the zoning districts; establishing the percentage of a lot or parcel which may be covered by buildings, and the size of yards and other open spaces.

SECTION 103. EFFECTIVE DATE

This Ordinance shall become effective on **May 29, 1969**.

SECTION 104. PURPOSE[*2,*3]

This Amended Zoning Ordinance is designed to promote the public health, peace, safety, comfort, convenience and general welfare of the citizens of Maricopa County; to guide, control and regulate the future growth and development in order to promote orderly and appropriate use of land in the entire unincorporated area of said county; to protect the character and the stability of residential, business and industrial areas of Maricopa County; to facilitate existing or potential traffic movements; to provide adequate light, air and parking facilities; to secure safety from fire and other dangers; and to prevent overcrowding of land and undue congestion of population; and to prevent the concentration of adult oriented facilities which has been determined to be a cause to neighborhood deterioration and blight through an increase in crime and diminution of property values. The provisions of this Ordinance should have neither the purpose nor effect of imposing a limitation or restriction on the content of any communicative materials, including adult oriented materials. Similarly, it is not the intent or effect of the Ordinance to restrict or deny access to materials protected by the First Amendment. In preparation of this Ordinance consideration has been given to Sections 11-801 through 11-808 and 11-821 through 11-830 of the Arizona Revised Statutes, and to all studies and surveys made in the past in connection therewith, including, but not limited to, the following reports and studies of present conditions and prospective future growth:

1. Part I of Comprehensive Plan for Maricopa County - History, Economics, Physical Features;

2. Part II of the Comprehensive Plan for Maricopa County - Population, Community Growth, Existing Land Use;

3. Part III of the Comprehensive Plan for Maricopa County - A Report Upon Future General Land Use;

4. Major Street and Highway Plan;

5. Present and Future Water Use and its Effect on Planning in Maricopa County;

6. The Economy of Maricopa County;

7. Area Plans.

Date of Revisions			
*2	Revised 8-23-90	*3	Revised 8-21-93

SECTION 105. INTERPRETATION

In interpreting and applying the regulations of this Ordinance, they shall be held to be the minimum requirements for the promotion of the public health, safety and general welfare. It is not intended by this Ordinance to interfere with or abrogate or annul any ordinances, rules, regulations or permits previously adopted or issued, and not in conflict with any of the regulations of this Ordinance, or which shall be adopted or issued pursuant to law relating to the use of buildings or premises and likewise not in conflict with this Ordinance; nor is it intended by this Ordinance to interfere with or abrogate or annul any easements, covenants, or other agreements between parties, except that if this Ordinance imposes a greater restriction, this Ordinance shall regulate.

SECTION 106. SEPARABILITY CLAUSE

Should any chapter, section or regulation of this Ordinance be declared by the courts to be unconstitutional or invalid, such decision shall not affect the validity of the Ordinance as a whole, or any portion thereof other than the chapter, section or regulation so declared to be unconstitutional or invalid.

SECTION 107. REPEAL OF CONFLICTING ORDINANCES

All ordinances or portions of ordinances in conflict with this Ordinance, or inconsistent with the regulations of this Ordinance, are hereby repealed to the extent necessary to give this Ordinance full force and effect.

SECTION 108. GENERAL RULES FOR CONSTRUCTION OF LANGUAGE*4

All words used in the present tense shall include the future tense. All words in the singular number shall include the plural number, and all words in the plural number shall include the singular number. The word "structure" includes the word "building", the word "shall" is mandatory and not directory, and the word "may" is permissive.

Date of Revisions			
*4	Revised 10-3-77		

SECTION 201. DEFINITIONS[*1]

For the purpose of this Ordinance, certain words are hereby defined:

ADULT ORIENTED FACILITIES:[*6]

Which shall include the following:

1. ***Adult Arcade*** (also known as "peep show"): Any place to which the public is permitted or invited wherein coin-operated or slug-operated or electronically, electrically, or mechanically controlled still or motion picture machines, projectors, or other image-producing devices are maintained to show images to persons in booths or viewing rooms where the images so displayed depict or describe "specified sexual activities" or "specified anatomical areas." [*24]

2. ***Adult Bookstore or Adult Video Store:*** A commercial establishment which, as one of its principal business purposes, offers for sale or rental for any form of consideration any one or more of the following:[*24]

   a. Books, magazines, periodicals or other printed matter, or photographs, films, motion pictures, video cassettes or video reproductions, slides, or other visual representations that depict or describe "specified sexual activities" or "specified anatomical areas"; or

   b. Instruments, devices, or paraphernalia that are designed for use in connection with "specified sexual activities."

   A commercial establishment may have other principal business purposes that do not involve the offering for sale or rental of material depicting or describing "specified service activities" or "specified anatomical areas" and still be categorized as "adult book store" or "adult video store". Such other business purposes will not serve to exempt such commercial establishment from being categorized as an adult book store or adult video store so long as one of its principal business purposes is the offering for sale or rental for consideration the specified materials which depict or describe "specified sexual activities" or "specified anatomical areas".

3. ***Adult Live Entertainment Establishment:*** [*24] An establishment, which features:

   a. Persons who appear in a state of nudity; or

   b. Live performances which are characterized by the exposure of "specified anatomical areas" or by "specified sexual activities"; or

c. Films, motion pictures, video cassettes, slides, or other photographic reproductions which are characterized by the depiction or description of "specified sexual activities" or "specified anatomical areas."

4. ***"Adult" Motion Picture Theater:*** A commercial establishment where, for any form of consideration, films, motion pictures, video cassettes, slides, or similar photographic reproductions are predominantly shown which are characterized by the depiction or description of "specified sexual activities" or "specified anatomical areas." *24

5. ***"Adult" Theater:*** A theater, concert hall, auditorium, or similar commercial establishment which predominantly features persons who appear in a state of nudity or live performances which are characterized by the exposure of "specified anatomical areas" or by "specified sexual activities."*24

6. ***Massage Establishment:***[*24] Any establishment having its place of business where any person, firm, association or corporation engages in or carries on or permits to be engaged in or carried on any massage activities defined as: Any method of pressure on, friction against, or stroking, kneading, rubbing, tapping, pounding, vibrating, or stimulating of external soft parts of the body with the hands or with the aid of any mechanical apparatus or electrical apparatus or appliance, with or without such supplementary aids as rubbing alcohol. This definition shall not apply to:

   a. Persons authorized by the laws of this state to practice medicine, osteopathy, chiropractic, podiatry, or naturopathy;

   b. Registered nurses, licensed practical nurses or technicians, when acting under the supervision of a licensed physician or osteopath;

   c. Persons employed or acting as trainees for any bona fide amateur, semiprofessional or athlete or athletic team;

   d. Persons authorized by the laws of this state as barbers or cosmetologists, provided their activity is limited to the head, face, or neck;

7. ***Nude Model Studio:*** Any place where a person who appears in a state of nudity, or who displays "specified anatomical areas" is provided to be observed, sketched, drawn, painted, sculptured, photographed, or similarly depicted by other persons who pay money or any form of consideration. Nude model studio shall not include a proprietary school licensed by the State of Arizona or a college, junior college or university supported entirely or in part by public taxation; a private college or university which maintains and operates education programs in which credits are transferable to a college, junior college, or university supported entirely or partly by taxation; or in a structure: *24

a. That has no sign visible from the exterior of the structure and no other advertising that indicates a nude person is available for viewing; and

b. Where in order to participate in a class a student must enroll at least **three days** in advance of the class; and

c. Where no more than **one** nude or semi-nude model is on the premises at any **one** time.

AIRPORT:

A landing area used regularly by aircraft for receiving or discharging passengers or cargo.

1. ***Helipad:*** An area on a heliport established for the landing or takeoff of helicopters.

2. ***Heliport:*** A landing area solely for the use of helicopters. A heliport may include more than one helipad.

3. ***Landing Area:*** Any locality, either land or water, including airports and landing fields, which is used or intended to be used for the landing and takeoff of aircraft, whether or not facilities are provided for the shelter, servicing or repair of aircraft or for receiving or discharging passengers or cargo.

4. ***Landing Area Boundary:*** The outer limit of the land or water of a landing area.

ALLEY:

A passage or way open to public travel which affords generally a secondary means of vehicular access to abutting lots and is not intended for general traffic circulation.

ALLEY LINE:

The boundary which separates the right-of-way of an alley from the abutting property.

AMATEUR RADIO ANTENNA:

The arrangement of wires or metal rods used in the sending and receiving of electromagnetic waves by amateur radio operators. *29

AMATEUR RADIO ANTENNA SUPPORT STRUCTURE:

Any structure, mast, pole, tripod, or tower utilized for the purpose of supporting amateur radio antennas for the purpose of transmission or reception of electromagnetic waves by amateur radio operators. *29

AREA OF JURISDICTION:

That part of the County without the corporate limits of any municipality.

AREA PLAN:

A land use plan adopted by the Board of Supervisors for a portion of the County. *17

AUTOMOBILE GRAVEYARD:

Any establishment or place of business which is maintained, used, or operated for storing, keeping, buying or selling wrecked, scrapped, ruined or dismantled motor vehicles or motor vehicle parts. An automobile graveyard may include repair facilities as an ancillary use. *12

BASEMENT:

That portion of a building between floor and ceiling which is partly below and partly above grade, but so located that the vertical distance from grade to floor below is less than the vertical distance from grade to ceiling.

BOARD OF SUPERVISORS:

The Board of Supervisors of Maricopa County.

BOARDING HOUSE:

A building where, for compensation and by prearrangement for definite periods, meals or lodging and meals, are provided for **three or more persons**, but not exceeding **20 persons**.

BUILDABLE AREA:

The portion of a lot which is within the envelope formed by the required yards. See "YARD, REQUIRED".

BUILDING:

A structure having a roof supported by columns or walls for housing, shelter or enclosure of persons, animals, chattels or property of any kind.

BUILDING, ACCESSORY:

A building or structure which is subordinate to, and the use of which is incidental to that of the principal building, structure or use on the same lot.

BUILDING, COMMUNITY:

A public building designed or used for community activities of an educational, recreational or public service nature.

BUILDING HEIGHT:

The vertical distance from grade to the highest point of the coping of a flat roof; to the deck line of a mansard roof or the height of the highest gable, hip or gambrel roof. *10

BUILDING, PRINCIPAL:

A building in which is conducted the principal use of the lot on which it is situated. In a residential zoning district any dwelling is deemed to be the principal building on the lot on which it is situated.

CARETAKER:

A person whose assigned duties may include maintaining property, caring for farm animals, providing security, or providing care for a person having a documented medical condition.*25

CARPORT:

A roofed structure with **two** or **more** open sides under which a vehicle may be driven.

CELLAR:

That portion of a building between floor and ceiling which is partly below and partly above grade, but so located that the vertical distance from grade to floor below is greater than the vertical distance from grade to ceiling.

COMMISSION:

The County Planning and Zoning Commission of Maricopa County.

COMPREHENSIVE PLAN:

The plan adopted by the Board of Supervisors which meets the requirements of Title 11, Section 821 of Arizona Revised Statutes governing County Planning and Zoning.[*17]

CONDITIONAL USE:

A use of property permitted by right within a zoning district only as long as required conditions are met.[*25]

CONDITIONAL USE PERMIT:

The permit issued for a conditional use in accordance with the provisions of Chapter 13.[*25]

CORRAL:

A pen or enclosure for confining animals.

DEVELOPMENT MASTER PLAN:

A plan approved by Maricopa County in accordance with Section 206 of the county's subdivision regulations which establishes the future development patterns for an area (usually one or more square miles).[*25]

DIRECTOR:

The Director of the Maricopa County Department of Planning and Development.[*4]

DWELLING:

A building or portion thereof designed or used exclusively for residential occupancy, including single-family, two-family and multiple-family dwellings, but not including hotels, boarding and lodging houses.

DWELLING GROUP:

A group of **three** or **more** buildings which occupy a parcel of land in **one** ownership and have a yard in common.

DWELLING, MULTIPLE:

A building or portion thereof designed for occupancy by **three** or **more** families.

DWELLING, SINGLE-FAMILY:

A building designed for occupancy by **one family**.

DWELLING, TWO-FAMILY:

A building designed for occupancy by **two families**.

DWELLING UNIT:

One or more persons occupying a premise and living as a single housekeeping unit as distinguished from a group occupying a boarding house, lodging house or hotel as herein defined.

EASEMENT, NON-ACCESS:

An easement prohibiting vehicular access from a public street.[**9]

EMERGENCY HOUSING:

Temporary shelter required due to a natural disaster or fire.[*25]

FARM:

An area of not less than **two contiguous acres** which is used for the commercial production of farm crops such as vegetables, fruit trees, cotton, grain and other crops and their storage on the area, as well as the raising thereon of farm poultry and farm animals, such as horses, cattle, sheep and swine for commercial purposes. The term "farm" includes the operating of such an area for **one** or **more** of the above uses, including dairy farms, with the necessary accessory uses for treating or storing the produce, provided that the operation of any such accessory use is secondary to that of the farm activities, and provided further that the farm activities do not include commercial pen feeding or commercial feed lots or the commercial feeding of garbage or offal to swine or other animals.

FEED LOT, COMMERCIAL:

A livestock feeding or handling facility operated for the purpose of accommodating the needs of others in whole or in part for a fee or fees paid to the operator or owners for the accommodations, materials and services received.

FLOOR AREA:

For purposes of computing off-street parking requirements, floor area shall mean the gross floor area of the building or buildings and the open land area developed for use of the public, not including parking areas. *5, *19

GARAGE, PRIVATE:

An accessory building or portion of a principal building designed or used for the parking or temporary storage of motor vehicles of occupants in the building to which such garage is accessory, but not including the parking or temporary storage of delivery or truck motor vehicles having a capacity in excess of **10,000 lbs. gross vehicle weight.** *26

GARAGE, PUBLIC:

A building or portion thereof, other than a private garage, designed or used for servicing, repairing, equipping, hiring, selling or storing motor vehicles.

GRADE:

The lowest point of elevation of the surface of the ground, paving or sidewalk at any point adjacent to a structure or fence/wall. For purposes of calculating structure, building or fence/wall heights, existing established grade shall be utilized on subdivision land and natural, undisturbed grade shall be utilized on unsubdivided land. *16

GROUP HOME FOR THE HANDICAPPED AND ADULT CARE:

A dwelling unit shared as their primary residence by handicapped or elderly persons, living together as a single housekeeping unit, in a long term, family-like environment in which staff persons provide on-site care, training, or support for the residents. Such homes or services provided therein shall be licensed by, certified by, approved by, registered with, funded by or through, or under contract with the State. Group homes shall not include homes for the developmentally disabled, defined as persons afflicted with autism, cerebral palsy, epilepsy or mental retardation, as regulated by Arizona Revised Statutes, §36-582. *23

GUEST:

Any transient person who rents or occupies a room for sleeping purposes.

GUEST RANCH:

A building or group of buildings containing **two** or **more** guest rooms, other than a boarding house, hotel or motel, and including outdoor recreational facilities such as, but not limited to,

horseback riding, swimming, tennis courts, shuffleboard courts, barbecue and picnic facilities, and dining facilities intended for the use primarily by guests of the guest ranch, but not including bars and restaurants which cater primarily to other than guests of the guest ranch.

GUEST ROOM:

A room which is designed for occupancy by **one** or **more** guests for sleeping purposes, but having no cooking facilities and not including dormitories.

HANDICAPPED:

A person who: 1) Has a physical or mental impairment which substantially limits **one** or **more** of such person's major life activities. 2) Has a record of having impairment. However, "Handicapped" shall not include current illegal use of or addiction to a controlled substance (as defined in § 102 of the Controlled Substance Act [21 United States Code 802]).[*23]

HILLSIDE LOT OR PARCEL:

A lot or parcel of land which is required to comply with Maricopa County Zoning Ordinance, Chapter 12, Section 1201, Hillside Development Standards.[*32]

HOME OCCUPATION, RESIDENTIAL:

An accessory use of a dwelling that involves very limited manufacture, provision, or sale of goods and/or services. Garage/yard sales or home parties, that are held for the sale of goods or services, are not considered a home occupation provided these sales do not exceed **six** in **one year**. A residential home occupation is only permitted per the standards contained in the Rural and Single-Family Zoning Districts.[*18]

HOME OCCUPATION, COTTAGE INDUSTRY:

An accessory use of a dwelling that involves limited manufacture, provision or sale of goods and/or services. Garage/yard sales or home parties that are held for the sale of goods or services are not considered a home occupation provided these sales do not exceed **six** in **one year**. A cottage industry is a more intense use than a residential home occupation and is only permitted per the standards contained in the Special Use Section in Rural Zoning Districts.[*18]

HOSPITAL:

An institution for the diagnosis, treatment, or other care of human ailments. The term hospital is deemed to include sanitarium, preventorium, clinic, rest home, nursing home, convalescent home and maternity home.

HOTEL:

A building in which lodging or boarding and lodging are provided for more than **20 persons** and offered to the public for compensation and in which ingress and egress to and from all guest rooms are made through an inside lobby or office.

HOTEL, RESORT:

A building or group of buildings, other than a motel, boarding house or lodging house, containing individual guest rooms, suites of guest rooms, and dwelling units, and which furnish services customarily provided by hotels.

JUNK:

Any old or scrap copper, brass, rope, rags, batteries, paper, trash, wood and rubber debris, waste, or junked, dismantled, or wrecked automobiles, or parts thereof, iron, steel, and other old or scrap ferrous or nonferrous material.

JUNKYARD:

An establishment or place of business which is maintained, operated, or used for storing, keeping, buying, or selling junk, or for the maintenance or operation of an automobile graveyard. The term "junkyard" includes garbage dumps and sanitary fills.

KENNEL:

Any premises that are used for the commercial breeding, boarding, training, grooming or bathing of dogs, cats, and/or other small domesticated household pets (not farm animals), or for the breeding or keeping of dogs for racing purposes. *13

LABOR CAMP:

Any camp or similar place of temporary abode, established by or for the care of workmen engaged in construction, repair or alteration work on roads or highways, railroads, or in lumbering or agricultural operations, or in other industrial activities.

LAUNDRY, SELF-SERVICE:

A building within which clothes washing and drying machines, and clothes dry cleaning machines, either coin operated or attendant operated, are provided on a rental basis for use by individuals for doing their own laundry and dry cleaning. Self-service laundry does not include outdoor drying facilities.

LOADING AND UNLOADING SPACES:

A permanently maintained space on the same lot as the principal building accessible to a street or alley and not less than **ten feet** in width, **20 feet** in length, and **14 feet** in height.

LODGING HOUSE:

A building where lodging only is provided for compensation to **three** or **more** persons, but not exceeding **20** persons.

LOT:

Any lot, parcel, tract of land, or combination thereof, shown on a plat of record or recorded by metes and bounds that is occupied or intended for occupancy by a use permitted in this Ordinance, including **one principal building** together with its accessory buildings, the open spaces and parking spaces required by this Ordinance, and having its principal frontage upon a street or upon an officially approved place.

LOT AREA:

The area of a horizontal plane within the lot lines of a lot.

LOT, CORNER:

A lot which has an interior angle of **135 degrees** or **less** at the intersection of **two** street lines**.** A lot abutting upon a curved street is considered a corner lot if the tangents to the curve at the points of intersection of the side lot lines intersect at an interior angle of **135 degrees** or **less**.

LOT COVERAGE:

The percentage of the area of a lot which is occupied by all buildings or other covered structures.

LOT DEPTH:

For lots having front and rear lot lines which are parallel, the shortest horizontal distance between such lines; for lots having front and rear lot lines which are not parallel, the shortest horizontal distance between the midpoint of the front lot line and the midpoint of the rear lot line; and for triangular shaped lots, the shortest horizontal distance between the front lot line and a line within the lot parallel to and at a maximum distance from the front lot line, having a length of not less than **ten feet**.

LOT, INTERIOR:

A lot other than a corner lot.

LOT, KEY:

A lot adjacent to a corner lot having its side lot line in common with the rear lot line of the corner lot and fronting on the street which forms the side boundary of the corner lot.

LOT LINE:

Any line bounding a lot.

LOT LINE, FRONT:

The boundary of a lot which separates the lot from the street; and in the case of the corner lot, the front lot line is the shorter of the **two lot lines** separating the lot from the street except that where these lot lines are equal or within **15 feet** of being equal, either lot line may be designated the front lot line but not both. In the case of residential lots located within a tract or a commercial pad located within a parking lot which have no direct street frontage, the front lot line must be designated by the applicant at the time of subdivision approval or prior to zoning clearance if no subdivision is required.[*26, *30]

LOT LINE, REAR:

The boundary of a lot which is most distant from, and is, or is most nearly, parallel to the front lot line; except that in the absence of a rear lot line as is the case of the triangular shaped lot, the rear lot line may be considered as a line within the lot, parallel to and at a maximum distance from the front lot line, having a length of not less than **ten feet**.

LOT LINE, SIDE:

The boundary of a lot which is not a front lot line or a rear lot line.

LOT OF RECORD:

A lot which is part of a subdivision, the plat of which has been recorded in the office of the County Recorder of Maricopa County; or a lot, parcel or tract of land, the deed of which has been recorded in the office of the County Recorder of Maricopa County.

LOT THROUGH:

A lot having a pair of opposite lot lines abutting **two streets**, and which is not a corner lot. On such lot, both lot lines are front lot lines, except that where a non-access easement has been established on such a lot, the front lot line shall be considered as that lot line most distant from the lot line containing the non-access easement.*9

LOT WIDTH:

For rectangular lots, lots having side lot lines not parallel, and lots on the outside of the curve of a street, the distance between side lot lines measured at the required minimum front yard line on a line parallel to the street or street chord; and for lots on the inside of the curve of a street, the distance between side lot lines measured **30 feet** behind the required minimum front yard line on a line parallel to the street or street chord.

MANUFACTURED HOME:

A structure, manufactured after **June 15, 1976**, transportable in one or more sections, which in the traveling mode, is **eight body feet** or **more** in width and **40 body feet** or **more** in length, and when erected on site, is **320 square feet** or **more** in size, and which is built on a permanent chassis and designed to be used as a dwelling with or without a permanent foundation when connected to the required utilities, and includes the plumbing, heating, air conditioning, and electrical systems contained therein. Calculations used to determine the number of square feet in a manufactured home will be based on the exterior dimensions measured at the largest horizontal projections when erected on site. These dimensions will include all expandable rooms, cabinets, and other projections containing interior space, but do not include bay windows. The term "manufactured home" does not include recreational vehicles or factory built buildings (including modular) or mobile homes. *27

MANUFACTURED HOME, MULTI-SECTIONAL:

A multi-sectional manufactured home not exceeding **two stories** in height and manufactured after **June 15, 1976**, to standards established by the U.S. Department of Housing Urban Development that when joined forms a residence for human occupancy that measures **16 feet** by **40 feet** or **larger** and which is designed to be installed on a permanent foundation system when located on an individual lot of record in a rural or residential zoning district. A multi-sectional manufactured home shall have roofing and siding materials similar in appearance and kind to those used in site built homes.*27

MOBILE HOME:

A dwelling unit built prior to **June 15, 1976**, on a permanent chassis, capable of being transported in one or more sections and designed to be used with or without a permanent

foundation as a dwelling in approved locations when connected to on-site utilities. The term "mobile home" does not include recreational vehicles or factory built buildings. [3, *8, *11]

MCDOT:

Maricopa County Department of Transportation.[*25]

MOBILE HOME PARK:

Any parcel of land upon which **two** or **more** mobile homes occupied for dwelling or sleeping purposes, are located regardless of whether or not a charge is made for such accommodations.

MOBILE HOME SPACE:

A plot of ground within a mobile home park or travel trailer park designed for the accommodation of **one mobile home** or **travel trailer** together with its accessory structures including carports or other off-street parking areas, storage lockers, ramadas, cabanas, patios, patio covers, awnings and similar appurtenances.

MOBILE HOME SUBDIVISION:

A subdivision designed and intended for residential use where residence is in mobile homes exclusively.

MOTEL:

A building or group of buildings containing guest rooms or dwelling units, some or all of which have a separate entrance leading directly from the outside of the building with garage or parking space located on the lot and designed, used, or intended wholly or in part for the accommodation of automobile transients. Motel includes motor courts, motor lodges and tourist courts, but not mobile home parks or travel trailer parks.

NONCONFORMING USE:

The lawful use of any building, lot, parcel or tract of land existing at the time this Ordinance, or amendments thereto, become effective which does not conform with the use regulations of the zoning district in which it is located.

NUDITY OR A STATE OF NUDITY:[*24] means:

1. The appearance of a human anus, male genitals, female genitals, or female breast; or

2. A state of dress which fails to opaquely cover a human anus, male genitals, female genitals, or areola of the female breast.

PARKING LOT:

An area, other than a street or alley, devoted to unenclosed parking spaces.

PARKING SPACE, STANDARD:

A rectangular area of not less than **nine feet** in width and not less than **18 feet** in length, together with independent access from an aisle or driveway to be used by automobiles.[*5, *19]

PARKING SPACE, HANDICAPPED:

A rectangular area of not less than **12 feet** in width and **18 feet** in length, together with independent access from an aisle or driveway.[*20]

PARKING SPACE/LOT, PAVING:

The material used for permanently surfacing a parking space and/or lot which may include any of the following: asphaltic concrete; cement concrete; penetration treatment of bituminous material and a seal coat of bituminous and mineral aggregate; or the equivalent of the above as approved by the Department of Planning and Development.[*20]

PLACES OF PUBLIC ASSEMBLY:

For purposes of establishing parking requirements, the following uses shall be considered places of public assembly uses: churches, elementary, junior high and high schools both public and private, colleges and university, both public and private, funeral homes, museums, libraries, private clubs, lodges, community buildings, theaters, auditoriums, arenas, indoor and outdoor stadiums, health spas, gyms, tennis/handball court facilities, hospitals, rest homes, orphanages, nursing homes and institutions of a religious, charitable or philanthropic nature and uses similar to the above uses. [*20]

PLANNING AND ZONING COMMISSION:

The Planning and Zoning Commission of Maricopa County.[*21]

PRIVATE HILLSIDE ROAD:

A thoroughfare providing recorded vehicular access to more than one property, in which any or all properties over which the access traverses, falls within the purview of the Hillside

Development Standards. (This does not apply to roadways under the jurisdiction of the Maricopa County Department of Transportation).*32

RECREATION VEHICLE:

A vehicular or portable unit mounted on a chassis and wheels, designed and constructed to be installed with or without a permanent foundation for human occupancy as a residence, not more than **12 feet** in width, nor more than **40 feet** in length and containing no more than **400 square feet** in total floor area. Total width of said unit including all tip-outs, slide-outs, hinged extensions, or solid frames shall not exceed **12 feet**. For purposes of measuring length, the recreation vehicle hitch and/or tongue shall be excluded. The term "recreation vehicle" shall include travel trailers, camping trailers, truck campers, and motor homes.**11

RECREATION VEHICLE (OVERNIGHT):

A recreation vehicle which is not designed for, or to be used for, permanent residential use in a travel trailer/recreation vehicle park or at other approved locations.**11

RECREATION VEHICLE (DESTINATION):

A recreation vehicle which is designed for, and is to be used for, permanent residential use in a travel trailer/recreation vehicle park or at other approved locations. The term recreation vehicle (destination) includes park model travel trailers.**11

RECREATION VEHICLE PARK:

Any parcel of land upon which **two** or **more** recreation vehicles for dwelling or sleeping purposes are located regardless of whether or not a charge is made for such accommodations.**11

SCHOOL:

An institution of learning, such as preschools, day nurseries, nursery schools, charter schools, elementary and secondary schools, colleges and universities, which offer instruction in several branches of learning and study, but not including business colleges, dancing schools, riding academies, or trade or vocational schools.*31

SEMI-NUDE:

Means a state of dress in which clothing covers no more than the genitals, pubic region, and areola of the female breast, as well as portions of the body covered by supporting straps or devices.*24

SERVANT:

A person who is paid for performing household duties such as cooking, cleaning, chauffeuring, nursing, caring for children, or similar activities. *25

SERVICE STATION:

A building or use devoted to the retail sale of fuels, lubricants, and other supplies for motor vehicles, including minor repair activities which are subordinate to the sale of petroleum products.

SETBACK LINE:

A line measured from the future right-of-way line of a street or property line, as applicable.*14

SIGN:

Any device for visual communication, including any structure or natural object or part thereof, that is used for the purpose of bringing the subject thereof to the attention of the public, but not including any flag, badge or insignia of any government or governmental agency, or of any civic, charitable, religious, patriotic, fraternal or similar organization.

SIGN, MONUMENT:*15

A freestanding on-site advertising sign which meets the following requirements:

1. The base of the sign must be equal to or greater than **one half** the width of the sign.

2. Maximum sign area of **32 square feet**.

3. Maximum sign height of **six feet**.

4. The sign is no closer than **three feet** from any property line and is also no closer than **30 feet** from any rural or residential zone boundary.

5. The sign must allow clear unobstructed vision at corners of streets and at driveway entrances/exits to the property. The sign must be placed in accordance with Chapter 14, Section 1404. located herein as applied to corners of intersecting streets and at driveway entrances/exits to streets.

6. The sign must meet all other standards for on-site advertising signs not specified above.

SIGN, ROOF:

A sign affixed on, above, or over the roof of a building so that it projects above the eave line of a roof. The top of the parapet wall shall be considered the eave line. The lowest point of a mansard style roof shall be considered the eave line. Where a parapet wall is combined with a mansard roof, the eave line shall be the top of the parapet.*15

SINGLE-FAMILY RESIDENTIAL COMPLEX:

A group of single-family dwellings designed for individual separate ownership with unified management that provides common services and outdoor recreational facilities, but not including public bars, public restaurants or any commercial activity in connection therewith.

SPECIAL USE:

A use of property whose characteristics or impacts do not allow the use to be permitted in a zoning district without approval by the Board of Supervisors in accordance with the provisions of Chapter 13, Section 1301.*25

SPECIAL USE PERMIT:

The permit issued for a special use in accordance with the provisions of Chapter 13.*25

SPECIFIED SEXUAL ACTIVITIES: *24

Means and includes any of the following:

1. Human genitals in a state of sexual stimulation or arousal.

2. Sex acts, normal or perverted, actual or simulated, including acts of human masturbation, sexual intercourse, oral copulation, or sodomy.

3. Fondling or other erotic touching of human genitals, pubic region, buttocks, anus, or female breasts.

4. Excretory functions as part of or in connection with any of the activities set forth in 1. through 3. above.

SPECIFIED ANATOMICAL AREAS:*24

The male genitals in a state of sexual arousal and/or the vulva or more intimate parts of the female genitals, and may include:

1. Less than completely and opaquely covered:

   a. Human genitals, pubic region;

   b. Breasts below a point immediately above the top of the areola.

2. Human male genitals in a discernibly turgid state, even if completely and opaquely covered.

STORY:

That portion of a building, other than a cellar, included between the surface of any floor and the surface of the floor next above it, or, if there be no floor above it, then the space between the surface of such floor and the ceiling or roof above it.

STREET:

All property dedicated or otherwise reserved for public or private street uses, or having thereon a public easement for such use. A street shall not include commercial/industrial parking lots or single family/multi-family common tract areas used for ingress/egress. These parking lots and common tract areas shall be deemed to meet the legal access requirements of this Ordinance.[*26]

STREET LINE:

The boundary which separates the right-of-way of a street from the abutting property.

STRUCTURAL ALTERATION:

Any change in the supporting members of a building, such as bearing walls or partitions, columns, beams or girders, or any complete rebuilding of the roof or exterior walls.

STRUCTURE:

Anything constructed or erected which requires location on the ground or attached to something having location on the ground, including multi-sectional manufactured homes, but not including other types of mobile homes, tents, recreational vehicles or travel trailers.[*27]

TRAVEL TRAILER PARK:

Any parcel of land upon which **two** or **more** travel trailers for dwelling or sleeping purposes are located regardless of whether or not a charge is made for such accommodations.

TRAVEL TRAILER SPACE:

A plot of ground within a mobile home park or travel trailer park designed for the accommodation of **one** travel trailer together with its accessory structures including carports or other off-street parking areas, storage lockers, ramadas, cabanas, patios, patio covers, awnings and similar appurtenances.

USE:

The purpose or purposes for which land or a building is occupied, maintained, arranged, designed, or intended.

USE, ACCESSORY:

A use which is customarily incidental and subordinate to the principal use of a lot or a building, including bona fide servant quarters, or accessory vehicle parking or storage and located on the same lot therewith.[*26]

USE, PRINCIPAL:

The main use of land or a building as distinguished from an accessory use.

WAREHOUSING AND STORAGE:

Buildings used for the rental of space to the public for the storage of merchandise, commodities or personal property and where access is under the control of the building management, but excluding the warehousing and storage of explosive, corrosive or noxious materials, such as dust, fumes or noise that could be dangerous, injurious, distasteful, pernicious or obnoxious to man, other organisms or properties.[*2]

WAREHOUSES, MINI:

Buildings which are composed of contiguous individual rooms which are rented to the public for the storage of personal property and which have independent access and locks under the control of the tenant; but excluding the storage of explosive, corrosive or noxious materials, such as dust, fumes, or noise that could be dangerous, injurious, distasteful, pernicious or obnoxious to man, other organisms or properties; and further excluding any other use otherwise permitted in the zoning district in which the mini-warehouse is located.[*2]

WIRELESS COMMUNICATION FACILITIES:

Either a structure composed of a monopole; or a structure mounted on a building; either of which is maintained by a public service corporation, and which supports microwave antennae and

dishes and other necessary attachments used exclusively for cellular communication purposes, all of which are used as part of a cellular mobile telephone communications system. *22

YARD:

The open space at grade level between a building and the adjoining lot lines, unoccupied and unobstructed by any portion of a structure from the ground upward, except as otherwise provided in this Ordinance. In measuring a yard for the purpose of determining the width of a side yard, the depth of a front yard or the depth of a rear yard, the minimum horizontal distance between the lot line and the principal building is to be used; however, on any lot wherein a setback line has been established by the regulations of this Ordinance for any street abutting the lot, such measurement is to be taken from the principal building to the setback line (see "YARD, REQUIRED").

YARD, FRONT:

A yard extending across the front width of a lot and being the minimum horizontal distance between the street line and the principal building or any projection thereof, other than steps, unenclosed balconies and unenclosed porches. The front yard of a corner lot is the yard adjacent to the designated front lot line.

YARD, REAR:

A yard extending between the side lot lines and being the minimum horizontal distance between the rear lot line and the rear of the principal building or any projection thereof, other than steps, unenclosed balconies or unenclosed porches. On corner lots and interior lots, the rear yard is in all cases at the opposite end of the lot from the front yard.*28

YARD, REQUIRED:

The minimum open space as specified by the regulations of this Ordinance for front, rear and side yards, as distinguished from any yard area in excess of the minimum required (see "BUILDABLE AREA").

YARD, SIDE:

A yard between the building and the side lot line of a lot and extending from the front yard to the rear yard and being the minimum horizontal distance between a side lot line and the side of the principal building or any projection thereof, other than steps, unenclosed balconies or unenclosed porches. An interior side yard is defined as the side yard adjacent to a common lot line.*28

ZONING DISTRICT:

Any portion of the unincorporated area of Maricopa County in which the same zoning regulations apply.

ZONING CLEARANCE:

The issuance of a permit or authorization by the Zoning Inspector indicating that a proposed building, structure or use of land meets all the standards contained in this Ordinance.[*1, *4]

ZONING INSPECTOR:

The Director of the Maricopa County Department of Planning and Development or his duly authorized representative.[*1, *4]

Date of Revisions			
*1	Revised 12-30-74	*17	Added 8-23-90
*2	Added 5-2-77	*18	Revised 9-12-90
*3	Revised 6-6-77	*19	Revised 4-3-91
*4	Revised 10-3-77	*20	Added 4-3-91
*5	Revised 5-11-81	*21	Renumbered after subparagraph 202.71 4-3-91
*6	Revised 6-1-81	*22	Added 4-5-92
*8	Revised 3-15-82	*23	Added 4-15-93
*9	Revised 8-15-83	*24	Revised 8-21-93
**9	Added 8-15-83	*25	Added 2-20-94
*10	Revised 4-1-85	*26	Revised 5-6-94
*11	Revised 4-7-86	*27	Revised 7-23-94
**11	Added 4-7-86	*28	Revised 6-5-96
*12	Revised 5-18-87	*29	Effective 1-17-98
*13	Revised 10-19-87	*30	Effective 7-2-99
*14	Revised 2-6-89	*31	Effective 11-19-99
*15	Added 11-02-89	*32	Effective 10-4-01
*16	Revised 5-16-90		

Chapter 3 - Administration

SECTION 301. BOARD OF SUPERVISORS

Reserved.

SECTION 302. PLANNING AND ZONING COMMISSION

Reserved.

SECTION 303. BOARD OF ADJUSTMENT

ARTICLE 303.1. CREATION AND MEMBERSHIP: There is hereby created one Board of Adjustment representing the five supervisorial districts of Maricopa County. The Board of Adjustment shall be composed of five members. One member shall be appointed from each of the five supervisorial districts. Each member shall be a resident and taxpayer of the unincorporated area of the supervisorial district from which he or she is appointed. The appointments shall be for staggered terms of four years each, except that the first members of such board shall be appointed for the following terms: One member for one year, one member for two years, one member for three years, two members for four years. Members of such board shall be appointed by the Board of Supervisors. The Board of Supervisors shall also have the authority to remove any member for cause after public hearing. Vacancies shall be filled for the unexpired term of the member whose place has become vacant. The jurisdiction of the Board of Adjustment shall include all five supervisorial districts from which the members thereof are appointed. [*4, *11]

ARTICLE 303.2. POWERS AND DUTIES: [*1, *3, *4] The Board of Adjustment shall have only the powers and duties prescribed by this Ordinance, which are more particularly the following:

303.2.1. Interpret upon appeal, the terms of this Ordinance when the meaning of any word, phrase, or regulation is in doubt, when there is dispute between the appellant and the Zoning Inspector or when the location of a zoning district boundary is in doubt.

303.2.2. Allow upon application a Variance in the strict application of any of the regulations of this Ordinance where, by reason of any peculiar situation, surroundings or conditions of a specific property, or by reason of particular narrowness, shallowness or shape of a specific lot of record, or by reason of unusual topographical conditions, the strict application of any regulation of this Ordinance would result in practical difficulties or unnecessary hardship upon the owner of such property, provided such relief can be granted without substantially

impairing the purpose of this Ordinance. In granting any Variance appropriate conditions in conformity with the purpose of this Ordinance shall be prescribed. Under no circumstances shall there be granted a Variance to allow a use of property not permitted by the regulations for the zoning district in which such property is located or where such Variance is specifically prohibited within this ordinance. No variance to Chapter, Sections 1302, 1303 or Chapter 11, Section 1115 shall be considered. *5, *8, *10

303.2.3. Grant, upon application and filing of a letter of protest or request for extension, Temporary Use Permits required by this Ordinance.*8

ARTICLE 303.3. MEETINGS AND RULES: *1, *3, *4, *11 Meetings of the Board of Adjustment shall be held at the call of the Chairman, regularly at least once a month and at such other times deemed necessary for the transaction of business. All such meetings shall be open to the public. The Chairman, or in his absence the Vice-Chairman, may administer oaths and compel the attendance of witnesses. The Board of Adjustment shall keep minutes of its proceedings, showing the vote of member upon each question, or if absent or failing to vote, indicating such facts, and shall also keep records of its hearings and other official actions. A copy of every rule or regulation, every Variance and every order, requirement, decision or determination of the Board of Adjustment shall be filed with the Director and shall be a public record. The Board of Adjustment shall adopt its own rules of procedure and elect its own officers.

ARTICLE 303.4. APPEALS:[*3] An appeal to the Board of Adjustment concerning interpretation or administration of this Ordinance may be taken by any person aggrieved or by any officer, department, board or agency of Maricopa County affected by any decision of the Zoning Inspector. Such appeal shall be taken within a reasonable time, not to exceed **60 days** or such lesser period as may be provided by the rules of the Board of Adjustment, by filing with the Director and with the Board of Adjustment a notice of appeal specifying the grounds thereof. The Director shall forthwith transmit to the Board of Adjustment all papers constituting the record upon which the action appealed from was taken. Such an appeal shall stay all proceedings in the matter appealed from unless the Director certifies to the Board of Adjustment that, by reason of the facts stated in the certificate, the stay would in his opinion cause imminent peril to life or property. In such case, proceedings shall not be stayed, except by a restraining order granted by said Board of Adjustment or by a court of record on application and notice to the Zoning Inspector from whom the appeal is taken. Said Board of Adjustment shall fix a time for hearing the appeal and give notice thereof to the parties in interest and the public as set forth herein.

ARTICLE 303.5. APPLICATION FOR VARIANCE: *1, *3, *8 Application for any Variance to the regulations of this Ordinance shall be made to the Board of Adjustment. Such applications shall be made on forms prescribed by the Board of Adjustment, shall be filed with the Director, and shall be accompanied by:

303.5.1. Accurate plot plans and description of the property involved, description of the proposed use, preliminary floor plans and elevations of all proposed buildings, and an estimate of the valuation of the proposed construction.

303.5.2. Evidence, satisfactory to the Board of Adjustment, of the ability and intention of the applicant to proceed with actual construction work in accordance with said plans within **120 days** after allowing any Variance. *8

303.5.3. Reasons for requesting the Variance. *8

ARTICLE 303.6. PUBLIC HEARINGS:

303.6.1. ***Appeals:*** Upon receipt in proper form of appeals concerning interpretation or administration of this Ordinance, the Board of Adjustment having jurisdiction shall hold public hearing thereon after giving at least **ten days** public notice thereof as well as due notice to the parties in interest, and decide the same within a reasonable time.

303.6.2. ***Variance or Temporary Use Permit:*** Upon receipt in proper form of applications for any Variance to the regulations of this Ordinance or upon receipt of a letter of protest or request for extension for any Temporary Use Permit, the Board of Adjustment shall hold public hearing thereon after giving public notice thereof by adequately posting the area of concern in such application at least **ten days** in advance of the public hearing and decide the same within a reasonable time.*8

303.6.3. ***Continuation of a Conditional Use Permit:*** Upon receipt in proper form of a fifth consecutive status report for continuation of a Conditional Use Permit for a model home sales complex or construction yard (etc.). The Board of Adjustment shall hold a public hearing pursuant to public notice by posting the property at least **ten days** in advance of the public hearing. A decision regarding continuance of the Conditional Use Permit will normally be made at that public hearing. **8

ARTICLE 303.7. APPEAL OF A DECISION MADE BY THE BOARD OF ADJUSTMENT: *4 A person aggrieved by a decision of the Board of Adjustment may at any time, within **30 days** of such decision, appeal to the Superior Court and the matter shall be heard de novo as appeals from courts of justices of the peace.

ARTICLE 303.8. LIMITATIONS: Any Variance or Temporary Use Permit granted under the terms of this Ordinance shall expire by limitation of substantial construction, in accordance with the plans for which such Variance or Temporary Use Permit was granted, which has not been completed within **one year** from the date of granting said Variance or Temporary Use Permit, or if judicial proceedings to review the Board of Adjustment's decision shall be instituted **one year** from the date of entry of the final order in such proceedings, including all appeals. *8

Date of Revisions			
*1	Revised 12-30-74	*8	Revised 2-20-94
*3	Revised 10-3-77	**8	Added 2-20-94
*4	Revised 2-26-79	*10	Effective 1-17-98
*5	Revised 4-14-80	*11	Effective 2-4-00

SECTION 304. AMENDMENTS

ARTICLE 304.1. AUTHORITY: The Board of Supervisors may from time to time, after receiving report and recommendation thereupon by the Commission and after public hearings required by law, amend zoning district boundaries or the regulations herein or subsequently established. Amendments may be initiated either by the property owner or by the Commission on its own motion. *14

ARTICLE 304.2. AMENDMENTS INITIATED BY PROPERTY OWNER(S): *14

304.2.1. Any property owner or authorized agent of a property owner desiring an amendment or change in the Zoning Ordinance changing the zoning district boundaries within an area previously zoned shall file an application for the amendment or change with the Board of Supervisors.

304.2.2. Upon receipt of the application, the Board of Supervisors shall submit it to the Commission for report and recommendation. Prior to presenting its report and recommendation to said Board, the Commission shall hold public hearing thereon after giving at least **15 days** notice thereof by publication once in a newspaper of general circulation in the seat of Maricopa County and by posting of the area included in the proposed change. The posting shall be in no less than **two** places with at least **one** notice for each **one-quater mile** of frontage along perimeter public rights-of-way so that the notices are visible from the nearest public right-of-way.

304.2.3. The Commission shall also send notice by first class mail to each real property owner as shown on the last assessment of the property within **300 feet** of the

proposed amendment or change and each county or municipality which is contiguous to the area of the amendment or change. The notice sent by mail shall include, at a minimum, the date, time and place of the hearing on the proposed amendment or change including a general explanation of the matter to be considered; a general description of the area of the proposed amendment or change; and notification that if **20%** of the property owners by area and number within the zoning area file protests, an affirmative vote of **three-fourths** of all members of the Board will be required to approve the rezoning.

304.2.4. If the Planning Commission has held a public hearing, the Board may adopt the recommendations of the Planning Commission through use of a consent calendar without holding a second public hearing if there is no objection, request for public hearing or other protest. If there is an objection, a request for public hearing or a protest, the Board of Supervisors shall hold public hearing on such petitions giving at least **15 days** notice thereof by publication once in a newspaper of general circulation in the seat of Maricopa County and by adequate posting of the area of concern in said petition at least **15 days** in advance of the public hearing. After holding the public hearing, the Board of Supervisors may adopt the petitioner's proposed change provided that if **20%** of the owners by number and by area, of all property within **300 feet** of the proposed change, file a protest, such a change shall not be made except by a **three-fourths** vote of all members of the Board of Supervisors. However, except that the required number of votes shall in no event be less than a majority of the full members of the Board. *17

304.2.5. In calculating the owners by area for a protest, only that portion of a lot or parcel of record situated within **300 feet** of the property to be rezoned shall be included. In calculating the owner by number or area, County property and public rights-of-way shall not be included.

ARTICLE 304.3. AMENDMENTS INITIATED BY THE COMMISSION: *14, *19

304.3.1. Amendments initiated by the Commission are subject to the same public hearing requirements set forth herein Chapter 3, Section 304, Article 304.2 (amendments initiated by property owners).

304.3.2. Notice by first class mail of proceedings that are not initiated by the property owner involving rezoning of land to a more restrictive zone shall be sent to each real property owner, as shown on the last assessment of the property, of the area to be rezoned and all property owners, as shown on the last assessment of the property, within **300 feet** of property to be rezoned. **10, *11

A *"more restrictive zone"* shall be interpreted to mean:

1. Zoning from one category to another category; or,

2. Zoning from a less restrictive use to a more restrictive use within categories as shown on the following table:

CATEGORY A:	
(More Restrictive) (Less Restrictive)	Rural-190 Rural Zoning District Rural-70 Rural Zoning District Rural-43 Rural Zoning District
CATEGORY B:	
(More Restrictive) (Less Restrictive)	R1-35 Single-Family Residential Zoning District R1-18 Single-Family Residential Zoning District R1-10 Single-Family Residential Zoning District R1-8 Single-Family Residential Zoning District R1-7 Single-Family Residential Zoning District R1-6 Single-Family Residential Zoning District R-2 Limited Multiple-Family Residential Zoning District R-3 Limited Multiple-Family Residential Zoning District R-4 Limited Multiple-Family Residential Zoning District R-5 Limited Multiple-Family Residential Zoning District
CATEGORY C:	
(More Restrictive) (Less Restrictive)	C-O Commercial Office Zoning District C-S Planned Shopping Center Zoning District C-1 Neighborhood Commercial Zoning District C-2 Intermediate Commercial Zoning District C-3 General Commercial Zoning District
CATEGORY D:	
(More Restrictive) (Less Restrictive)	IND-1 Planned Industrial Zoning District IND-2 Light Industrial Zoning District IND-3 Heavy Industrial Zoning District
CATEGORY E:	Any Special Use
CATEGORY F:	Hillside Development Overlay Zoning District
CATEGORY G:	Senior Citizen Overlay Zoning District
CATEGORY H:	Residential Unit Plan of Development
CATEGORY I:	Industrial Unit Plan of Development
CATEGORY J:	Commercial Unit Plan of Development

ARTICLE 304.4. AMENDMENTS TO ZONING ORDINANCE STANDARDS: **11, *21

304.4.1. Proceedings involving **one** or **more** of the following proposed changes or related series of changes in the standards governing land uses, shall include notice to real property owners provided by one of the methods discussed below:

1. A **10%** or **more** increase or decrease in the number of square feet or units that may be developed.

2. A **10%** or **more** increase or reduction in the allowable height of buildings.

3. An increase or reduction in the allowable number of stories of buildings.

4. A **10%** or **more** increase or decrease in setback or open space requirements.

5. An increase or reduction in permitted uses.

Prior to the first hearing on such changes, notice shall be sent by first class mail to each real property owner, as shown on the last assessment, whose real property is directly affected by the changes; or the change shall be published in a display ad covering not less than **one-eighth** of a full page in a newspaper of general circulation in the County.*20

304.4.2. For amendments to Zoning Ordinance standards or uses, the Department will send notice by first class mail to persons who register their names and addresses with the Department as being interested in receiving such notice. A fee of **$5.00 per year** will be charged for the provision of this service payable initially upon registration and yearly thereafter.

ARTICLE 304.5. AMENDMENT APPROVED BY THE BOARD: **10,*11,***11,*18 A decision by the Board of Supervisors involving rezoning of land which changes the zoning classification of such land or amends Zoning Ordinance standards or uses shall not be effective until the dedication of required right-of-way but not prior to **31 days** after final approval of the change in classification, standard or use by the Board. Unless a resident files a written objection with the Board of Supervisors, the rezoning may be enacted as an emergency measure that becomes effective immediately by a **four-fifths** majority vote of the board.

ARTICLE 304.6. CONDITIONAL ZONING: ***11

304.6.1. The Board of Supervisors may approve a change of zone conditioned on a schedule for development of the specific use or uses for which rezoning is requested. When the Board of Supervisors adopts the zoning amendment, it may impose a schedule of development including, but not limited to, a date by which construction shall commence or dates by which phases of development of the property for the use approved shall be substantially completed. **9, ***10

304.6.2. The owner or developer of property which was rezoned conditioned on compliance with a schedule of development shall submit to the Department a certified statement of compliance prior to the expiration of any time limits imposed by the Board. If the certified statement of compliance is not filed or the Department independently determines that the property has not been improved for the use for which it was conditionally approved, a public hearing shall be set before the Commission. The findings and recommendation of the Commission shall be forwarded to the Board of Supervisors for public hearing to determine compliance with the schedule of development, grant an extension, or cause the property to revert to its former zoning classification. Notification by registered mail of both the hearing before the Commission and the hearing before the Board shall be sent to the owner and applicant who requested the rezoning. Notice of public hearing shall be as set forth in Chapter 3, Section 304., Article 304.2. herein.

ARTICLE 304.7. RECONSIDERATION OF DENIED PETITION: *2, ***9, ***10, ***11 If a petition for amendment is withdrawn by the applicant or denied by the Board of Supervisors, that petition shall not be refiled nor shall there be filed with the Board of Supervisors any other petition for the same amendment within a period of **one year** unless in the opinion of the Commission there is a change of circumstances warranting such filing.

ARTICLE 304.8. COMPLIANCE WITH COUNTY PLANS: *12 All applications for changes of Zoning District boundaries that include property, which totals **40 acres** or **more** in size must be in compliance with the County's adopted Comprehensive Plan and/or any adopted area plan.

Date of Revisions			
*2	Revised 9-13-71	*12	Added 8-23-90
**9	Added 8-4-86	*14	Revised 8-06-93
***9	Renumbered 8-4-86	*17	Revised 8-21-96
**10	Added 12-7-87	*18	Revised 8-21-96
***10	Renumbered 12-7-87	*19	Effective 5-15-98
*11	Revised 2-6-89	*20	Effective 6-21-98
**11	Added 2-6-89	*21	Effective 1-15-99
***11	Renumbered 2-6-89		

SECTION 305. CITIZEN REVIEW PROCESS*24

305.1. Upon application for a change in the Zoning Ordinance changing the zoning district within an area previously zoned as set forth in Chapter 13, Section 304, Articles 304.2 and 304.3 herein or upon application requesting a special use as set forth in Chapter 13, Section 1301 herein, a citizen review process shall be conducted. The purposes of the citizen review process shall be the following:

1. Adjacent landowners and other potentially affected citizens will be notified of the application and substance of the proposed change in zoning district or special use.

2. Adjacent landowners and other potentially affected citizens will be provided an opportunity to express any issues or concerns they may have with the proposed rezoning or special use before any public hearing required as set forth in Chapter 3, Section 304, Articles 304.2 and 304.3 herein.

305.2. Prior to any application that requires a citizen review process, the applicant shall conduct a pre-application meeting with the Planning Department.

305.3. Within 30 days upon submitting an application that requires a citizen review process, the applicant shall post the property included in the proposed change. The posting shall be in no less than two places with at least one notice for each quarter mile of frontage along perimeter right-of-way so that the notices are visible from the nearest public right-of-way. Each notice shall be a minimum of six square feet in area and shall be laminated. The posting shall include, at a minimum, a brief description of the area of the proposed amendment or change, a general explanation of the nature of the proposed amendment or change, the name of the applicant, and contact information for the applicant. A signed affidavit along with photographic evidence shall be submitted to staff demonstrating proof of posting within 30 days of application submittal.

305.4. Within 30 days upon submitting an application that requires a citizen review process, the applicant shall also send notice by first class mail to each real property owner as shown on the last assessment of the property within three hundred feet of the proposed amendment or change. The notice by mail shall include, at a minimum, description of the area of the proposed amendment or change, a general explanation of the nature of the proposed amendment or change, the name of the applicant, and contact information for the applicant. A copy of the notice and an affidavit demonstrating proof of such notification shall be submitted to staff within 30 days of application submittal.

305.5. Every application that requires a citizen review process shall include a citizen participation plan. The citizen participation plan, at a minimum, shall include the following information:

1. Which residents, property owners, interested parties, political jurisdictions and public agencies may be affected by the application.

2. How those interested in and potentially affected by an application will be notified that an application has been made.

3. How those interested and potentially affected parties will be informed of the substance of the change, amendment, or development proposed by the application.

4. How those affected or otherwise interested will be provided an opportunity to discuss the applicant's proposal with the applicant and express any concerns, issues or problems they may have with the proposal in advance of the public hearing.

5. The applicant's schedule for completion of the citizen participation plan.

6. How the applicant will keep the Planning Department informed on the status of their citizen participation efforts.

305.6. The level of citizen interest and area involvement will vary depending on the nature of the application and the location of the site. The target area for early notification will be determined through a coordinated effort of the applicant and staff. The Planning Director shall resolve any disputes that may arise while arriving at the target area. At a minimum, the target area shall include the following:

1. Real property owners within the noticing area set forth in item 305.4 herein;

2. The head of any homeowners association within the noticing area set forth in item 305.4 herein;

3. Other potentially affected citizens in the target area who have requested that they be placed on the routing list maintained by the Planning Department.

305.7. These requirements apply in addition to any notice provisions set forth in Chapter 3, Section 304, Articles 304.2 and 304.3 herein.

305.8. The applicant may submit a citizen participation plan and begin implementation prior to formal application at their discretion. This shall not occur until after the required pre-application meeting and consultation with planning department staff.

305.9. The citizen participation plan shall include a written report on the results of the citizen participation effort prior to notice of public hearing set forth in Chapter 3, Section 304, Articles 304.2 and 304.3 herein. At a minimum the citizen participation report shall include the following information:

1. Details and techniques the applicant used to involve the public, including:

   a. Dates and locations of any and all meetings where citizens were invited to discuss the applicant's proposal;

   b. Content, dates mailed, and number of mailings, including letters, meeting notices, newsletters and other publications;

   c. The location of residents, property owners, and interested parties receiving notices, newsletters or other written materials.

   d. The number of people that participated in the process.

2. A summary of perceived or real concerns, issues and problems expressed during the process, including:

   a. The substance of the concerns, issues, and problems;

   b. How the applicant has addressed or intends to address perceived or real concerns, issues, and problems expressed during the process; and,

   c. Perceived or real concerns, issues and problems with which the applicant disagrees, which the applicant cannot address, or which the applicant chooses not to address, including an explanation of the applicant's reasoning.

Date of Revisions			
*24	Effective 6-1-01		

SECTION 401. ESTABLISHMENT OF ZONING DISTRICTS AND BOUNDARIES THEREOF

For the purpose of this Ordinance, that part of Maricopa County outside the corporate limits of any municipality is hereby classified into the following zoning districts:

ARTICLE 401.1. RURAL ZONING DISTRICTS:

401.1.1. **RURAL - 190** Rural Zoning District - **190,000 Square Feet** Per Dwelling Unit

401.1.2. **RURAL - 70** Rural Zoning District - **70,000 Square Feet** Per Dwelling Unit

401.1.3. **RURAL - 43** Rural Zoning District - **1 Acre** Per Dwelling Unit

ARTICLE 401.2. SINGLE FAMILY RESIDENTIAL ZONING DISTRICTS:

401.2.1. **R1 - 35** Single-Family Residential Zoning District - **35,000 Square Feet** Per Dwelling Unit

401.2.2. **R1 - 18** Single-Family Residential Zoning District - **18,000 Square Feet** Per Dwelling Unit

401.2.3. **R1 - 10** Single-Family Residential Zoning District - **10,000 Square Feet** Per Dwelling Unit

401.2.4. **R1 - 8** Single-Family Residential Zoning District - **8,000 Square Feet** Per Dwelling Unit

401.2.5. **R1 – 7**[*2] Single-Family Residential Zoning District - **7,000 Square Feet** Per Dwelling Unit

401.2.6. **R1 - 6** Single-Family Residential Zoning District - **6,000 Square Feet** Per Dwelling Unit

ARTICLE 401.3. MULTIPLE FAMILY RESIDENTIAL ZONING DISTRICTS:

401.3.1. **R - 2** Two-Family Residential Zoning District

401.3.2. **R - 3** Multiple-Family Residential Zoning District

401.3.3. **R - 4** Multiple-Family Residential Zoning District

401.3.4. **R - 5** Multiple-Family Residential Zoning District

ARTICLE 401.4. COMMERCIAL ZONING DISTRICTS:

301.4.1.	**C - S**	Planned Shopping Center Zoning District
401.4.2.	**C - O**[*3]	Commercial Office Zoning District
401.4.3.	**C - 1**	Neighborhood Commercial Zoning District
401.4.5.	**C - 2**	Intermediate Commercial Zoning District
401.4.5.	**C - 3**	General Commercial Zoning District

ARTICLE 401.5. INDUSTRIAL ZONING DISTRICTS:

401.5.1.	**IND - 1**	Planned Industrial Zoning District
401.5.2.	**IND - 2**	Light Industrial Zoning District
401.5.3.	**IND - 3**	Heavy Industrial Zoning District

ARTICLE 401.6. OVERLAY ZONING DISTRICTS:

401.6.1.	**PAD**	Planned Area Development Overly
401.6.2.	**RUPD**	Residential Unit Plan of Development
401.6.3.	**CUPD**	Commercial Plan of Development
401.6.4.	**IUPD**	Industrial Plan of Development
401.6.5.	**PD**[*7]	Planned Development Zoning District
401.6.6.	**SC**[*5]	Senior Citizen Overlay Zoning District
401.6.7.	**WESTSIDE MILITARY AIRBASE**[*9]	Westside Military Airbase Overlay Zoning District
401.6.8.	**WICKENBURG SCENIC CORRIDOR**[*8]	Wickenburg Scenic Corridor Overlay Zoning District
401.6.9.	**HWY 74 SCENIC**	Highway 74 Scenic Corridor Overlay Zoning District

CORRIDOR[*11]

401.6.10. **WIRELESS COMMUNICATION FACILITY USE DISTRICTS**[*10] Wireless Communication Facilities Use District

401.6.11. **AD**[*4] Airport District (See Separate Ordinance)

401.6.12. **MHR**[*6,*12] Manufactured Housing Residential Zoning District–Deleted 7-23-94

Date of Revisions			
*2	Added 11-3-75	*8	Added 8-1-91
*3	Added 12-12-77	*9	Added 1-9-92
*4	Added 12-11-78	*10	Added 4-5-92
*5	Added 5-30-79	*11	Added 6-6-94
*7	Added 7-1-85		

SECTION 402. BOUNDARIES

ARTICLE 402.1. BOUNDARY LINES ON THE ZONING DISTRICT MAPS: The boundaries of the aforesaid zoning districts are shown upon the maps designated as the "Zoning District Maps". The zoning district maps, along with all the notations, references, and other maps, along with all the notations, references, and other information shown thereon, are a part of this Ordinance and have the same force and effect as if said maps and all the notations, references and other information shown thereon were all fully set forth or described herein.

ARTICLE 402.2. BOUNDARY DETERMINATION: Where uncertainty exists with respect to the boundaries of any zoning district as shown on the zoning district maps, the following rules shall apply:

402.2.1. Where zoning district boundaries are indicated as approximately following street or alley lines or the centerlines thereof, such lines shall be construed to be the zoning district boundaries.

402.2.2. Where zoning district boundaries are so indicated that they approximately follow the lot lines, such lot lines shall be construed to be the zoning district boundaries.

402.2.3. Where zoning district boundaries are indicated as approximately following the line of any stream, irrigation canal or other waterway or railroad right-of-way, or the boundary line of public land, the center of such stream, canal or waterway, or of

such railroad right-of-way, or the boundary line of such public land shall be construed to be the zoning district boundaries.

402.2.4. Where a zoning district boundary divides a lot or parcel of land, the location of such boundary, unless indicated by dimensions shown on the zoning district maps, shall be determined by the use of the scale appearing on said maps. Further, such zoning district line shall be treated as a property line for applying all zoning district requirements.*13

402.2.5. Where such boundaries have been changed by the Board of Supervisors pursuant to Chapter 3, Section 304. of this Ordinance and where such changed boundaries are shown on detailed maps, the detailed maps shall govern in event there is any difference between the boundaries shown on the zoning district maps adopted as part of this Ordinance, or subsequent amendments thereto, and the detailed maps.

ARTICLE 402.3. PUBLIC WAY VACATION: Whenever any street, alley or other public way is vacated by the Board of Supervisors, the zoning districts adjoining each side of such street, alley or public way shall be considered as extended to the center of such vacation and all area included in the vacation shall then and henceforth be subject to all appropriate regulations of the extended zoning districts.

Date of Revisions			
*13	Revised 6-5-96		

SECTION 403. LANDS NOT PREVIOUSLY ZONED

Lands which for reason of law, change in ownership or for any other reason, come under the authority of Maricopa County after this Ordinance becomes effective and which have not been zoned prior thereto by any other jurisdiction having zoning authority, shall be subject to the regulations of the Rural-190 Zoning District until such time as soon as practicable thereafter public hearings are held as required by law for the expressed purpose of zoning such lands pursuant to this Ordinance.

SECTION 404. LANDS PREVIOUSLY ZONED BY OTHER JURISDICTIONS

Lands which for reason of law, change in ownership or for any other reason, come under the authority of Maricopa County after this Ordinance becomes effective and which have been zoned prior thereto by another jurisdiction having zoning authority, shall retain such zoning until such time as soon as practicable thereafter public hearings are held as required by law for the expressed purpose of zoning such lands pursuant to this Ordinance.

SECTION 405. LOTS DIVIDED BY ZONING DISTRICT BOUNDARIES

Whenever a lot of record existing at the effective date of this Ordinance or any applicable subsequent amendment thereto is divided by a zoning district boundary, the regulations applicable to the zoning district in which **50%** or **more** of the lot area of such lot is located may apply to the entire area of such lot, provided that the greatest distance from said zoning district boundary to any lot line of such lot in the zoning district in which less than **50%** of its area is located shall not exceed **25 feet**. Such distance shall be measured perpendicular to said zoning district boundary.

SECTION 501. RURAL-190 (Rural Zoning District - 190,000 Square Feet Per Dwelling Unit)

ARTICLE 501.1. **PURPOSE:** The principal purpose of this zoning district is to conserve and protect farms and other open land uses, foster orderly growth in rural areas, and prevent urban and agricultural land use conflicts. The primary purpose of requiring large minimum lots of not less than **190,000 square feet** in area is to discourage small lot or residential subdivisions where public facilities such as water, sewage disposal, parks and playgrounds, and governmental services such as police and fire protection are not available or could not reasonably be made available. Principal uses permitted in this zoning district include both farm and non-farm residential uses, farms, and recreational and institutional uses.

ARTICLE 501.2. **USE REGULATIONS:** A building or premises shall be used only for the following purposes:

1. **One single-family dwelling** per lot of record.*5

2. **One multi-sectional manufactured home** per lot of record with the following standards: *12, *20

   a. If a permanent foundation wall is not installed, all sides of the multi-sectional manufactured home shall extend to meet the surrounding ground, or a facade shall be used on all sides of the manufactured home that would appear to have a foundation wall similar in appearance and kind to those used in conventional site built homes.

   b. Re-roofing, residing and structural additions shall conform to the Maricopa County Comprehensive Building Codes.

3. Churches, including accessory columbariums provided that the building area of the columbarium shall not exceed **10%** of the total building area of the church building(s). *8

4. Farms, as defined in Chapter 2.

5. Group homes for not more than **ten persons**, subject to the following performance criteria: *11, *16

a. Dispersal: No such home shall be located on a lot with a property line within **1,320 feet**, measured in a straight line in any direction, of the lot line of another such group home.

b. If licensing is required by the State of Arizona, for the use, proof of such licensure shall be available to the Department of Planning and Development prior to the use being established.

6. Public schools, elementary and high.*[19]

7. Private and charter schools as long as the following standards are met:

a. The lot shall be a minimum of **five acres** in size or larger.

b. All structures must setback a minimum of **100 feet** from all property lines and shall be screened from adjacent rural and residential zoned properties by a **six foot** high fence.

c. The lot shall have frontage along a paved road that has been accepted as a public right-of-way by the Maricopa County Department of Transportation.

d. The site shall include on-site drop-off and pick-up of students. All on-site drop-off and pick-up and other parking must be setback at least **50 feet** from all property lines, excluding ingress and egress, and meet requirements as outline in Chapter 11, Section 1102.1.2.1.

e. All other standards of the Zoning District shall apply. A zoning clearance must be obtained prior to construction of any school.

If these standards cannot be met, a Special Use Permit may be applied for.

8. Public and private forests and wildlife reservations.

9. Service to the public of water, gas, electricity, telephone and cable television. The foregoing shall be deemed to include without limitation, distribution, collector and feeder lines, pumping or booster stations along pipelines, and substations along electric transmission lines. Public utility treatment and generating plants, offices and

attendant facilities to the above uses may be allowed with a Special Use Permit.[*5, *18]

10. Publicly or privately owned or operated fire stations, and publicly owned or operated police stations and post offices.[*4]

11. Golf courses including clubhouses located thereon, but not including miniature courses or practice driving tees operated for commercial purposes.

12. Libraries, museums, parks, playgrounds and community buildings, provided such uses are conducted on a nonprofit basis.[*1]

13. Home occupations, residential, subject to the following:[*10]

    a. The entrepreneur of a home occupation shall reside in the dwelling in which the business operates.

    b. No one other than the residents of the dwelling shall be employed in the conduct of the home occupation.

    c. The business shall be conducted entirely within a completely enclosed dwelling.

    d. The total area used in the conduct of the business shall not exceed **15%** or **250 square feet** of the habitable dwelling area, whichever is less.

    e. There shall be no signs, advertising, display or other indications of the home occupation on the premises.

    f. The residential address of the business shall not be listed in any business directory or in any advertising.

    g. Direct sales of products, from display shelves or racks, is prohibited. However, a customer may pick up an order previously made by telephone or at a sales meeting.

    h. The home occupation shall not interfere with the delivery of utilities or other services to the area.

    i. The business shall not generate any noise, vibration, smoke, dust, odors, heat, glare, or electrical interference with radio or

television transmission in the area that would exceed that normally produced by a dwelling unit in a zoning district used solely for residential purposes.

j. No mechanical equipment or power tools shall be used, except that used for normal household purposes.

k. No toxic, explosive, flammable, radioactive, or other similar material shall be used, sold, or stored on the site.

l. There shall be no change to the residential appearance of the premises, including the creation of separate or exclusive business entrance(s).

m. No more than **one vehicle** used in commerce shall be permitted in connection with the home occupation. Said vehicle shall be stored in an enclosed garage at all times and shall have no more than **two axles.**

n. The number of clients or students on the premises shall not exceed **one** at any time.

o. No clients or students shall be permitted on the premises for business purposes between the hours of **10:00 p.m.** and **7:00 a.m.**

p. Deliveries from commercial suppliers shall not occur more than once a month, shall not restrict traffic circulation and shall occur between **8:00 a.m.** and **5:00 p.m.**, Monday through Friday.

q. Any outdoor display or storage of materials, goods, supplies, or equipment shall be prohibited.

r. If the home occupation requires that any clients or students visit the property, **one parking space** shall be provided per Chapter 11, Section 1102. of this Ordinance. For the purpose of providing said parking space, tandem parking is permissible.

14. Home occupations, cottage industry subject to securing a Special Use Permit. **10

15. Roadside stands offering for sale only farm products produced on the premises.***10

16. DELETED – Public riding stables and boarding stables. (See Chapter 13, Section 1301.1., Article 1301.1., Item 1301.1.20. **3

17. Plant nurseries and greenhouses for the propagation, cultivation and wholesale distribution of plants produced on the premises, provided such uses do not include retail sales. Open storage is limited to plants or packaged fertilizer, and the buildings and structures used in connection therewith set back from all lot lines a distance of not less than **50 feet**.

18. Corrals for the keeping of horses.

19. Fences or freestanding walls not to exceed a height of **six feet** outside of the lot's buildable area. Note: Those utility companies which are regulated by the Arizona Corporation Commission may be allowed increased fence heights due to national, state or local safety standards.*7

20. Accessory buildings and uses customarily incidental to the above uses, including:*11

    a. Private swimming pool along with incidental installations, such as pumps and filters, provided the following standards, and those in the current Uniform Building Code (U.B.C.), are met and maintained:

        1. Such pool and incidental installations are located in other than the required front yard.

        2. Such pools are set back from all lot lines a distance of not less than **three feet**.

        3. All fish ponds and other contained bodies of water, either above or below ground level, with the container being **18 inches** or more in depth and/or wider than **eight feet** at any point measured on the long axis shall conform to the location and enclosure requirements for swimming pools as provided in the current U.B.C.

4. Irrigation and storm water retention facilities and the water features in public parks and golf courses are exempt from the fencing requirements for swimming pool barriers as provided in the current U.B.C.

5. It is the responsibility of the property owner to ensure that any pool enclosure fence and its appurtenances (e.g., gates, latching devices, locks, etc.) are maintained in safe and good working order. No person shall alter or remove any portion of a swimming pool enclosure except to repair, reconstruct or replace the enclosure in compliance with provisions of swimming pool barriers as provided in the current U.B.C.[*6,*7,*9,*11,*12,*17]

b. Private tennis court, provided that such court is not constructed within **20 feet** of any adjoining property under other ownership, and provided that tennis court fences or walls shall not exceed **12 feet** in height.[*2]

c. Servant's quarters with kitchen facilities provided that the servant's quarters are integral to the primary dwelling unit and does not exceed **35%** of its area.[**11]

d. Accessory use lights provided that a permitted accessory use exists. The lights must be located on the property so as not to direct or reflect light upon adjoining land, shall not be constructed within **20 feet** of any adjoining property under other ownership, and shall not exceed **20 feet** in height.[**11]

21. Emergency housing: Temporary shelter required due to a natural disaster or fire or other circumstances determined to constitute an emergency by the zoning inspector.[**11, *15]

22. Conditional uses may be allowed on any lot in this district as authorized in Chapter 13, Section 1302.[**11]

23. Temporary uses may be allowed on any lot in this district as authorized in Chapter 13, Section 1303.[**11]

24. Special uses may be allowed on any lot in this district as authorized in Chapter 13, Section 1301.[**11]

ARTICLE 501.3. **HEIGHT REGULATIONS:** The height of buildings shall not exceed **30 feet** or **two stories**.

ARTICLE 501.4. **YARD REGULATIONS:** The required yards are as follows:

1. ***Front Yard:***

   a. There shall be a front yard having a depth of not less than **60 feet**.

   b. For through lots, a front yard shall be provided along both front lot lines.

   c. Yards along each street side of corner lots shall have a width equal to not less than **one half** the depth of the required front yard. Yards along each street side of corner lots shall otherwise conform with regulations applicable to front yards.

2. ***Side Yard:*** There shall be a side yard on each side of a building having a width of not less than **30 feet**.

3. ***Rear Yard:*** There shall be a rear yard having a depth of not less than **60 feet**.

ARTICLE 501.5. **INTENSITY OF USE REGULATIONS**: The intensity of use regulations are as follows:

1. ***Lot Area:*** Each lot shall have a minimum lot area of **190,000 square feet**.

2. ***Lot Width:*** Each lot shall have a minimum width of **300 feet**.

3. ***Lot Area Per Dwelling Unit:*** The minimum lot area per dwelling unit shall be **190,000 square feet**.

4. ***Lot Coverage:*** The maximum lot coverage shall be **5%** of the lot area.

5. ***Distance Between Buildings:*** The minimum distance between buildings on the same lot shall be **15 feet**.

ARTICLE 501.6. **PARKING REGULATIONS:** The parking regulations are as provided in Chapter 11, Section 1102. hereof.

ARTICLE 501.7. **SIGN REGULATIONS:** The sign regulations are as provided in Chapter 14, Section 1401. hereof.

Date of Revisions			
*1	Revised 1-24-72	**10	New 9-12-90
*2	Added 4-07-75	***10	Renumbered 9-12-90
**3	Deleted 8-11-75	*11	Revised 2-20-94
*4	Revised 1-03-77	**11	Added 2-20-94
*5	Revised 11-8-82	*15	Revised 6-5-96
*6	Revised 8-15-83	*16	Effective 5-16-98
*7	Revised 4-1-85	*17	Effective 8-6-99
*8	Revised 4-10-89	*18	Effective 11-19-99
*9	Revised 1-04-90	*19	Effective 11-19-99
*10	Revised 9-12-90	*20	Deleted 11-19-99

SECTION 502. RURAL–70 (Rural Zoning District - 70,000 Square Feet Per Dwelling Unit)

ARTICLE 502.1. **PURPOSE:** The principal purpose of this zoning district is to conserve and protect farms and other open land uses, foster orderly growth in rural areas, and prevent urban and agricultural land use conflicts. The primary purpose of requiring large minimum lots of not less than **70,000 square feet** in area is to discourage small lot or residential subdivisions where public facilities such as water, sewage disposal, parks and playgrounds, and governmental services such as police and fire protection are not available or could not reasonably be made available. Principal uses permitted in this zoning district include both farm and nonfarm residential uses, farms and recreational institutional uses.

ARTICLE 502.2. **USE REGULATIONS:** The use regulations are the same as those in the **Rural-190** Zoning District.

ARTICLE 502.3. **HEIGHT REGULATIONS:** The height of buildings shall not exceed **30 feet** or **two stories**.

ARTICLE 502.4. **YARD REGULATIONS:** The required yards are as follows:

1. ***Front Yard:***

   a. There shall be a front yard having a depth of not less than **60 feet**.

b. For through lots, a front yard shall be provided along both front lot lines.

c. Yards along each street side of corner lots shall have a width equal to not less than **one half** the depth of the required front yard. Yards along each street side of corner lots shall otherwise conform with regulations applicable to front yards.

2. ***Side Yard:*** There shall be a side yard on each side of a building having a width of not less than **30 feet**.

3. ***Rear Yard:*** There shall be a rear yard having a depth of not less than **60 feet**.

ARTICLE 502.5. **INTENSITY OF USE REGULATIONS:** The intensity of use regulations are as follows:

1. ***Lot Area:*** Each lot shall have a minimum lot area of **70,000 square feet**.

2. ***Lot Width:*** Each lot shall have a minimum width of **250 feet**.

3. ***Lot Area per Dwelling Unit:*** This minimum lot area per dwelling unit shall be **70,000 square feet**.

4. ***Lot Coverage:*** The maximum lot coverage shall be **10%** of the lot area.

5. ***Distance between Buildings:*** The minimum distance between buildings on the same lot shall be **15 feet**.

ARTICLE 502.6. **PARKING REGULATIONS:** The parking regulations are as provided in Chapter 11, Section 1102. hereof.

ARTICLE 502.7. **SIGN REGULATIONS:** The sign regulations are as provided in Chapter 14, Section 1401. hereof.

SECTION 503. RURAL-43 (Rural Zoning District - One Acre Per Dwelling Unit)

ARTICLE 503.1. **PURPOSE:** The principal purpose of this zoning district is to conserve and protect farms and other open land uses, foster orderly growth in rural and agricultural areas, and prevent urban and agricultural land use conflicts; but when governmental facilities and services, public utilities and street access

are available, or can reasonably be made available, applications for change of this zoning district to any single-family residential zoning district will be given favorable consideration. Principal uses permitted in this zoning district include both farm and non-farm residential uses, farms and recreational and institutional uses.

ARTICLE 503.2. **USE REGULATIONS:** The use regulations are the same as those in the **Rural-190** Zoning District.

ARTICLE 503.3. **HEIGHT REGULATIONS:** The height of buildings shall not exceed **30 feet** or **two stories**.

ARTICLE 503.4. **YARD REGULATIONS:** The required yards are as follows:

1. ***Front Yard:***

   a. There shall be a front yard having a depth of not less than **40 feet**.

   b. For through lots, a front yard shall be provided along both front lot lines.

   c. Yards along each street side of corner lots shall have a width equal to not less than **one half** the depth of the required front yard. Yards along each street side of corner lots shall otherwise conform with regulations applicable to front yards.

2. ***Side Yard:*** There shall be a side yard on each side of a building having a width of not less than **30 feet**.

3. ***Rear Yard:*** There shall be a rear yard having a depth of not less than **40 feet**.

ARTICLE 503.5. **INTENSITY OF USE REGULATIONS:** The intensity of use regulations are as follows:

1. ***Lot Area:*** Each lot shall have a minimum lot area of **one acre**.

2. ***Lot Width:*** Each lot shall have a minimum width of **145 feet**.

3. ***Lot Area per Dwelling Unit:*** This minimum lot area per dwelling unit shall be **one acre**.

4. ***Lot Coverage:*** The maximum lot coverage shall be **15%** of the lot area.

5. ***Distance Between Buildings:*** The minimum distance between buildings on the same lot shall be **15 feet**.

ARTICLE 503.6. **PARKING REGULATIONS:** The parking regulations are as provided in Chapter 11, Section 1102. hereof.

ARTICLE 503.7. **SIGN REGULATIONS:** The sign regulations are as provided in Chapter 14, Section 1401. hereof.

Date of Revisions			
*1	Revised 10-13-70		

SECTION 601. R1-35 (Single-Family Residential Zoning District - 35,000 Square Feet Per Dwelling Unit)

ARTICLE 601.1. **PURPOSE:** The principal purpose of this zoning district is to conserve and protect single-family residential development where minimum lots of not less than **35,000 square feet** in area are suitable and appropriate taking into consideration existing conditions, including present use of land, present lot sizes, future land use needs, and the availability of public utilities. Principal uses permitted in this zoning district include single-family dwellings, churches, schools, parks, playgrounds and other community facilities.

ARTICLE 601.2. **USE REGULATIONS:** A building or premises shall be used only for the following purposes:

1. **One single-family dwelling** per lot of record.*6

2. **One multi-sectional manufactured home** per lot of record. *14, *22

   a. If a permanent foundation wall is not installed, all sides of the multi-sectional manufactured home shall extend to meet the surrounding ground, or a facade shall be used on all sides of the manufactured home that would appear to have a foundation wall similar in appearance and kind to those used in conventional site built homes.

   b. Re-roofing, residing and structural additions shall conform to the Maricopa County Comprehensive Building Codes.

3. Churches, including accessory columbariums provided that the building area of the columbarium shall not exceed **10%** of the total building area of the church building(s). *9

4. Group homes for not more than **ten** persons, subject to the following performance criteria: *13, *18

   a. Dispersal: No such home shall be located on a lot with a property line within **1,320 feet**, measured in a straight line in any direction, of the lot line of another such group home.

   b. If licensing is required by the State of Arizona for the use, proof of such licensure shall be available to the Department of Planning and Development prior to the use being established.

5. Public schools, elementary and high. *21

6. Private and charter schools as long as the following standards are met:

   a. The lot shall be a minimum of **five acres** in size or larger.

   b. All structures must setback a minimum of **100 feet** from all property lines and shall be screened from adjacent rural and residential zoned properties by a **six foot** high fence.

   c. The lot shall have frontage along a paved road that has been accepted as a public right-of-way by the Maricopa County Department of Transportation.

   d. The site shall include on-site drop-off and pick-up of students. All on-site drop-off and pick-up and other parking must be setback at least **50 feet** from all property lines, excluding ingress and egress, and meet requirements as outline in Chapter 10, Section 10010.

   e. All other standards of the Zoning District shall apply. A zoning clearance must be obtained prior to construction of any school.

   If these standards cannot be met, a Special Use Permit may be applied for.

7. Service to the public of water, gas, electricity, telephone and cable television. The foregoing shall be deemed to include without limitation, distribution, collector and feeder lines, pumping or booster stations along pipelines, and substations along electric transmission lines. Public utility treatment and generation plants, offices and attendant facilities to the above uses may be allowed with a Special Use Permit. *6, *20

8. Publicly or privately owned or operated fire stations, and publicly owned or operated police stations and post offices. *4

9. Golf courses including clubhouses located thereon, but not including miniature courses or practice driving tees operated for commercial purposes.

10. Libraries, museums, parks, playgrounds, and community buildings, provided such uses are conducted on a nonprofit basis. *2

11. Home occupations, residential, subject to the following: *11

    a. The entrepreneur of a home occupation shall reside in the dwelling in which the business operates.

    b. No one other than the residents of the dwelling shall be employed in the conduct of the home occupation.

    c. The business shall be conducted entirely within a completely enclosed dwelling.

    d. The total area used in the conduct of the business shall not exceed **15%** or **250 square feet** of the habitable dwelling area, whichever is less.

    e. There shall be no signs, advertising, display or other indications of the home occupation on the premises.

    f. The residential address of the business shall not be listed in any business directory or in any advertising.

    g. Direct sales of products from display shelves or racks is prohibited. However, a customer may pick up an order previously made by telephone or at a sales meeting.

    h. The home occupation shall not interfere with the delivery of utilities or other services to the area.

    i. The business shall not generate any noise, vibration, smoke, dust, odors, heat, glare, or electrical interference with radio or television transmission in the area that would exceed that normally produced by a dwelling unit in a zoning district used solely for residential purposes.

    j. No mechanical equipment or power tools shall be used except that used for normal household purposes.

    k. No toxic, explosive, flammable, radioactive, or other similar material shall be used, sold, or stored on the site.

l. There shall be no change to the residential appearance of the premises, including the creation of separate or exclusive business entrance(s).

m. No more than **one vehicle** used in commerce shall be permitted in connection with the home occupation. Said vehicle shall be stored in an enclosed garage at all times and shall have no more than **two axles**.

n. The number of clients or students on the premises shall not exceed **one** at any time.

o. No clients or students shall be permitted on the premises for business purposes between the hours of **10:00 p.m. and 7:00 a.m.**

p. Deliveries from commercial suppliers shall not occur more than once a month, shall not restrict traffic circulation and shall occur between **8:00 a.m. and 5:00 p.m.**, Monday through Friday.

q. Any outdoor display or storage of materials, goods, supplies, or equipment shall be prohibited.

r. If the home occupation requires that any clients or students visit the property, **one parking space** shall be provided per Chapter 11, Section 1102. of this Ordinance. For the purpose of providing said parking space, tandem parking is permissible.

12. Fences or freestanding walls not to exceed a height of **three feet six inches** in any required front yard, and not to exceed a height of **six feet** in required side or rear yards on the lot, except that when a corner lot abuts a key lot, the fence or freestanding wall over **three feet six inches**, but not more than **six feet** in height on the corner lot, shall set back from the street side property line not less than **half** the depth of the required front yard. Note: Those utility companies which are regulated by the Arizona Corporation Commission may be allowed increased fence heights due to national, state or local standards. *5, *6, *8

13. Accessory buildings and uses customarily incidental to the above uses, including:

a. Corrals for the keeping of horses, provided such corrals are located in the rear yard, set back from all lot lines a distance of not less than **40 feet** and contain at least **1,200 square feet** of area for each horse kept therein. The keeping of horses on properties located in residential zoning districts in other than permitted corral areas is prohibited.

b. Private swimming pool along with incidental installations, such as pumps and filters, provided the following standards, and those in the current Uniform Building Code (U.B.C.), are met and maintained*:*

1. Such pool and incidental installations are located in other than the required front yard.

2. Such pools are set back from all lot lines a distance of not less than **three feet**.

3. All fish ponds and other contained bodies of water, either above or below ground level, with the container being **18 inches** or more in depth and/or wider than **eight feet** at any point measured on the long axis shall conform to the location and enclosure requirements for swimming pools as provided in the current U.B.C.

4. Irrigation and storm water retention facilities and the water features in public parks and golf courses are exempt from the fencing requirements for swimming pools as provided in the current U.B.C.

5. It is the responsibility of the property owner to ensure that any pool enclosure fence and its appurtenances (e.g., gates, latching devices, locks, etc.) are maintained in safe and good working order. No person shall alter or remove any portion of a swimming pool enclosure except to repair, reconstruct or replace the enclosure in compliance with provisions of swimming pool barriers as provided in the current U.B.C. *6, *7, *9, *11, *12, *19

c. Private tennis court, provided that such court is not constructed within **20 feet** of any adjoining property under

other ownership, and provided that tennis court fences or walls shall not exceed **12 feet** in height. *3, *13

d. Servant's quarters with kitchen facilities provided that the servant's quarters are integral to the primary dwelling unit and does not exceed **35%** of its area. **13

e. Accessory use lights provided that a permitted accessory use exists. The lights must be located on the property so as not to direct or reflect light upon adjoining land, shall not be constructed within **20 feet** of any adjoining property under other ownership, and shall not exceed **20 feet** in height. **13

14. Emergency housing: Temporary shelter required due to a natural disaster or fire or other circumstances determined to constitute an emergency by the zoning inspector. **13, *17

15. Conditional uses may be allowed on any lot in this district as authorized in Chapter 13, Section 1303. **13

16. Temporary uses may be allowed on any lot in this district as authorized in Chapter 13, Section 1302. **13

17. Special uses may be allowed on any lot in the district as authorized in Chapter 13, Section 1301. **13

ARTICLE 601.3. **HEIGHT REGULATIONS:** The height of buildings shall not exceed **30 feet** or **two stories**.

ARTICLE 601.4. **YARD REGULATIONS:** The required yards are as follows:

1. ***Front Yard:***

a. There shall be a front yard having a depth of not less than **40 feet**.

b. For through lots, a front yard shall be provided along both front lot lines.

c. Yards along each street side of corner lots shall have a width equal to not less than **half** the depth of the required front yard. Yards along each street side of corner lots shall otherwise conform with regulations applicable to front yards.

2 ***Side Yard:*** There shall be a side yard on each side of a building having a width of not less than **20 feet**.

3. ***Rear Yard:*** There shall be a rear yard having a depth of not less than **40 feet**.

ARTICLE 601.5. **INTENSITY OF USE REGULATIONS:** The intensity of use regulations are as follows:

1. ***Lot Area:*** Each lot shall have a minimum lot area of **35,000 square feet**.

2. ***Lot Width:*** Each lot shall have a minimum width of **145 feet**. *1

3. ***Lot Area Per Dwelling Unit:*** The minimum lot area per dwelling unit shall be **35,000 square feet**.

4. ***Lot Coverage:*** The maximum lot coverage shall be **20%** of the lot area.

5. ***Distance Between Buildings:*** The minimum distance between buildings on the same lot shall be **15 feet**.

ARTICLE 601.6. **PARKING REGULATIONS:** The parking regulations are as provided in Chapter 11, Section 1102. hereof.

ARTICLE 601.7. **SIGN REGULATIONS:** The sign regulations are as provided in Chapter 14, Section 1402. hereof.

Date of Revisions			
*1	Revised 10-13-70	*12	Revised 7-5-91
*2	Revised 1-24-72	*13	Revised 2-20-94
*3	Added 4-7-75	**13	Added 2-20-94
*4	Revised 1-3-77	*14	Added 7-23-94
*5	Revised 6-6-77	*17	Revised 6-5-96
*6	Revised 11-8-82	*18	Effective 5-16-98
*7	Revised 8-15-83	*19	Effective 8-6-99
*8	Revised 4-1-85	*20	Effective 11-19-99
*9	Revised 4-10-89	*21	Effective 11-19-99
*11	Revised 9-12-90	*22	Deleted 11-19-99

SECTION 602. R1-18 (Single-Family Residential Zoning District - 18,000 Square Feet Per Dwelling Unit)

ARTICLE 602.1. **PURPOSE:** The principal purpose of this zoning district is to conserve and protect single-family residential development where minimum lots of not less than **18,000 square feet** in area are suitable and appropriate taking into consideration existing conditions, including present use of land, present lot sizes, future land use needs and the availability of public utilities. Principal uses permitted in this zoning district include single-family dwellings, churches, schools, parks and playgrounds and other community facilities.

ARTICLE 602.2. **USE REGULATIONS:** The use regulations are the same as those in the **R1-35** Zoning District.

ARTICLE 602.3. **HEIGHT REGULATIONS:** The height of buildings shall not exceed **30 feet** or **two stories**.

ARTICLE 602.4. **YARD REGULATIONS:** The required yards are as follows:

1. ***Front Yard:***

   a. There shall be a front yard having a depth of not less than **30 feet**.

   b. For through lots, a front yard shall be provided along both front lot lines.

   c. Yards along each street side of corner lots shall have a width equal to not less than **half** the depth of the required front yard. Yards along each street side of corner lots shall otherwise conform with regulations applicable to front yards.

2. ***Side Yard:*** There shall be a side yard on each side of a building having a width of not less than **ten feet**.

3. ***Rear Yard:*** There shall be a rear yard having a depth of not less than **30 feet**.

ARTICLE 602.5. **INTENSITY OF USE REGULATIONS:** The intensity of use regulations are as follows:

1. ***Lot Area:*** Each lot shall have a minimum lot area of **18,000 square feet**.

2. ***Lot Width:*** Each lot shall have a minimum width of **120 feet**.

3. ***Lot Area Per Dwelling Unit:*** This minimum lot area per dwelling unit shall be **18,000 square feet**.

4. ***Lot Coverage:*** The maximum lot coverage shall be **25%** of the lot area.

5. ***Distance Between Buildings:*** The minimum distance between buildings on the same lot shall be **15 feet**.

ARTICLE 602.6. **PARKING REGULATIONS:** The parking regulations are as provided in Chapter 11, Section 1102. hereof.

ARTICLE 602.7. **SIGN REGULATIONS:** The sign regulations are as provided in Chapter 14, Section 1402. hereof.

SECTION 603. R1-10 (Single-Family Residential Zoning District 10,000 Square Feet Per Dwelling Unit)

ARTICLE 603.1. **PURPOSE:** The principal purpose of this zoning district is to conserve and protect single-family residential development where minimum lots of not less than **10,000 square feet** in area are suitable and appropriate taking into consideration existing conditions, including present use of land, present lot sizes, future land use needs and the availability of public utilities. Principal uses permitted in this zoning district include single-family dwellings, churches, schools, parks and playgrounds and other community facilities.

ARTICLE 603.2. **USE REGULATIONS:** The use regulations are the same as those in the **R1-35** Zoning District.

ARTICLE 603.3. **HEIGHT REGULATIONS:** The height of buildings shall not exceed **30 feet** or **two stories**.

ARTICLE 603.4. **YARD REGULATIONS:** The required yards are as follows:

1. ***Front Yard:***

   a. There shall be a front yard having a depth of not less than **20 feet**.

   b. For through lots, a front yard shall be provided along both front lot lines.

c. Yards along each street side of corner lots shall have a width equal to not less than **half** the depth of the required front yard. Yards along each street side of corner lots shall otherwise conform with regulations applicable to front yards.

2. ***Side Yard:*** There shall be a side yard on each side of a building having a width of not less than **seven feet**.

3. ***Rear Yard:*** There shall be a rear yard having a depth of not less than **25 feet**.

ARTICLE 603.5. **INTENSITY OF USE REGULATIONS:** The intensity of use regulations are as follows:

1. ***Lot Area:*** Each lot shall have a minimum lot area of **10,000 square feet**.

2. ***Lot Width:*** Each lot shall have a minimum width of **80 feet**.

3. ***Lot Area Per Dwelling Unit:*** This minimum lot area per dwelling unit shall be **10,000 square feet**.

4. ***Lot Coverage:*** The maximum lot coverage shall be **30%** of the lot area.

5. ***Distance Between Buildings:*** The minimum distance between buildings on the same lot shall be **15 feet**.

ARTICLE 603.6. **PARKING REGULATIONS:** The parking regulations are as provided in Chapter 11, Section 1102. hereof.

ARTICLE 603.7. **SIGN REGULATIONS:** The sign regulations are as provided in Chapter 14, Section 1402. hereof.

Date of Revisions			
*1	Revised 11-7-83		

SECTION 604. R1-8 (Single-Family Residential Zoning District - 8,000 Square Feet Per Dwelling Unit)

ARTICLE 604.1. **PURPOSE:** The principal purpose of this zoning district is to conserve and protect single-family residential development where minimum lots of not less than **8,000 square feet** in area are suitable and appropriate taking

into consideration existing conditions, including present use of land, present lot sizes, future land use needs and the availability of public utilities. Principal uses permitted in this zoning district include single-family dwellings, churches, schools, parks and playgrounds and other community facilities.

ARTICLE 604.2. USE REGULATIONS: The use regulations are the same as those in the **R1-35** Zoning District.

ARTICLE 604.3. HEIGHT REGULATIONS: The height of buildings shall not exceed **30 feet** or **two stories**.

ARTICLE 604.4. YARD REGULATIONS: The required yards are as follows:

1. ***Front Yard:***

   a. There shall be a front yard having a depth of not less than **20 feet**.

   b. For through lots, a front yard shall be provided along both front lot lines.

   c. Yards along each street side of corner lots shall have a width equal to not less than **half** the depth of the required front yard. Yards along each street side of corner lots shall otherwise conform with regulations applicable to front yards.

2. ***Side Yard:*** There shall be a side yard on each side of a building having a width of not less than **seven feet**.

3. ***Rear Yard:*** There shall be a rear yard having a depth of not less than **25 feet**.

ARTICLE 604.5. INTENSITY OF USE REGULATIONS: The intensity of use regulations are as follows:

1. ***Lot Area:*** Each lot shall have a minimum lot area of **8,000 square feet**.

2. ***Lot Width:*** Each lot shall have a minimum width of **80 feet**.

3. ***Lot Area Per Dwelling Unit:*** The minimum lot area per dwelling unit shall be **8,000 square feet**.

4. ***Lot Coverage:*** The maximum lot coverage shall be **35%** of the lot area.

5. ***Distance Between Buildings:*** The minimum distance between buildings on the same lot shall be **15 feet**.

ARTICLE 604.6. **PARKING REGULATIONS:** The parking regulations are as provided in Chapter 11, Section 1102. hereof.

ARTICLE 604.7. **SIGN REGULATIONS:** The sign regulations are as provided in Chapter 14, Section 1402. hereof.

SECTION 605. R1-7 (Single-Family Residential Zoning District - 7,000 Square Feet Per Dwelling Unit)

ARTICLE 605.1. **PURPOSE:** The principal purpose of this zoning district is to conserve and protect single-family residential development where minimum lots of not less than **7,000 square feet** in area are suitable and appropriate taking into consideration existing conditions, including present use of land, present lot sizes, future land use needs and the availability of public utilities. Principal uses permitted in this zoning district include single-family dwellings, churches, schools, parks and playgrounds and other community facilities.

ARTICLE 605.2. **USE REGULATIONS:** The use regulations are the same as those in the **R1-35** Zoning District.

ARTICLE 605.3. **HEIGHT REGULATIONS:** The height of buildings shall not exceed **30 feet** or **two stories**.

ARTICLE 605.4. **YARD REGULATIONS:** The required yards are as follows:

1. ***Front Yard:***

   a. There shall be a front yard having a depth of not less than **20 feet**.

   b. For through lots, a front yard shall be provided along both front lot lines.

   c. Yards along each street side of corner lots shall have a width equal to not less than **half** the depth of the required front yard. Yards along each street side of corner lots shall otherwise conform with regulations applicable to front yards.

2. ***Side Yard:*** There shall be a side yard on each side of a building having a width of not less than **five feet**.

3. ***Rear Yard:*** There shall be a rear yard having a depth of not less than **25 feet**.

ARTICLE 605.5. **INTENSITY OF USE REGULATIONS:** The intensity of use regulations are as follows:

1. ***Lot Area:*** Each lot shall have a minimum lot area of **7,000 square feet**.

2. ***Lot Width:*** Each lot shall have a minimum width of **70 feet**.

3. ***Lot Area Per Dwelling Unit:*** This minimum lot area per dwelling unit shall be **7,000 square feet**.

4. ***Lot Coverage:*** The maximum lot coverage shall be **35%** of the lot area.

5. ***Distance Between Buildings:*** The minimum distance between buildings on the same lot shall be **15 feet**.

ARTICLE 605.6. **PARKING REGULATIONS:** The parking regulations are as provided in Chapter 11, Section 1102. hereof.

ARTICLE 605.7. **SIGN REGULATIONS:** The sign regulations are as provided in Chapter 14, Section 1402. hereof.

Date of Revisions			
*1	Revised 11-3-75		

SECTION 606. R1-6 (Single-Family Residential Zoning District - 6,000 Square Feet Per Dwelling Unit)

ARTICLE 606.1. **PURPOSE:** The principal purpose of this zoning district is to conserve and protect single-family residential development where minimum lots of not less than **6,000 square feet** in area are suitable and appropriate taking into consideration existing conditions, including present use of land, present lot sizes, future land use needs and the availability of public utilities. Principal uses permitted in this zoning district include single-family dwellings, churches, schools, parks and playgrounds and other community facilities.

ARTICLE 606.2. **USE REGULATIONS:** The use regulations are the same as those in the **R1-35** Zoning District.

ARTICLE 606.3. **HEIGHT REGULATIONS:** The height of buildings shall not exceed **30 feet** or **two stories**.

ARTICLE 606.4. **YARD REGULATIONS:** The required yards are as follows:

1. ***Front Yard:***

   a. There shall be a front yard having a depth of not less than **20 feet**.

   b. For through lots, a front yard shall be provided along both front lot lines.

   c. Yards along each street side of corner lots shall have a width equal to not less than **half** the depth of the required front yard. Yards along each street side of corner lots shall otherwise conform with regulations applicable to front yards.

2. ***Side Yard:*** There shall be a side yard on each side of a building having a width of not less than **five feet**.

3. ***Rear Yard:*** There shall be a rear yard having a depth of not less than **25 feet**.

ARTICLE 606.5. **INTENSITY OF USE REGULATIONS:** The intensity of use regulations are as follows:

1. ***Lot Area:*** Each lot shall have a minimum lot area of **6,000 square feet**.

2. ***Lot Width:*** Each lot shall have a minimum width of **60 feet**.

3. ***Lot Area Per Dwelling Unit:*** This minimum lot area per dwelling unit shall be **6,000 square feet**.

4. ***Lot Coverage:*** The maximum lot coverage shall be **40%** of the lot area.

5. ***Distance Between Buildings:*** The minimum distance between buildings on the same lot shall be **ten feet**.

ARTICLE 606.6. **PARKING REGULATIONS:** The parking regulations are as provided in Chapter 11, Section 1102. hereof.

ARTICLE 606.7. **SIGN REGULATIONS:** The sign regulations are as provided in Chapter 14, Section 1402. hereof.

SECTION 701. R-2 (Two-Family Residential Zoning District)

ARTICLE 701.1. **PURPOSE:** The principal purpose of this zoning district is to provide for efficient use of land and facilities by single-family attached or detached dwellings and limited multiple-family residential projects taking into consideration existing conditions, including present use of land, future land use needs and the availability of public utilities. The minimum lot required is **6,000 square feet** in area and the minimum lot area required for each dwelling unit is **4,000 square feet**. Principal uses permitted in this zoning district include single-family, two-family, and limited multiple-family dwellings and other uses permitted in the single-family residential zoning district.

ARTICLE 701.2. **USE REGULATIONS:** A building or premises shall be used only for the following purposes:

1. Any use permitted in the **R1-35** Zoning District, subject to all the regulations specified in the use regulations for such R1-35 Zoning District.

2. Two-family and limited multiple-family dwellings.

3. Accessory buildings and uses customarily incidental to the above uses, including:

   a. Private tennis courts provided that such courts are not constructed within **20 feet** of any adjoining property not internal to the multiple-family development and provided that tennis court fences or walls shall not exceed **12 feet** in height and further provided that any lights for the tennis courts shall be subject to a use permit and shall be placed so as to not direct or reflect light upon adjoining land, and subject lights shall be in conformance with standards in Chapter 11, Section 1112. (Outdoor Light Control Provisions) herein. More than **one tennis court** is permitted so long as the primary use of the property is residential and so long as the court or courts are accessory to the residential use and maintained exclusively for the use of residents of the parcel on which it is located.

   b. Private swimming pools along with incidental installations, such as pumps and filters, provided such pools and incidental installations are located in other than the required front yard and provided such pools are set back from all lot lines a distance of not less than **three feet**. Pools and spas must

meet all barrier requirements as provided in the current U.B.C.*3

ARTICLE 701.3. **HEIGHT REGULATIONS:** The height of buildings shall not exceed **30 feet** or **two stories**.

ARTICLE 701.4. **YARD REGULATIONS:** The required yards are as follows:

1. ***Front Yard:***

   a. There shall be a front yard having a depth of not less than **20 feet**.

   b. For through lots, a front yard shall be provided along both front lot lines.

   c. Yards along each street side of corner lots shall have a width equal to not less than **half** the depth of the required front yard. Yards along each street side of corner lots shall otherwise conform with regulations applicable to front yards.

2. ***Side Yard:*** There shall be a side yard on each side of a building having a width of not less than **five feet**.

3. ***Rear Yard:*** There shall be a rear yard having a depth of not less than **25 feet**.

ARTICLE 701.5. **INTENSITY OF USE REGULATIONS**: The intensity of use regulations are as follows:

1. ***Lot Area:*** Each lot shall have a minimum lot area of **6,000 square feet**.

2. ***Lot Width:*** Each lot shall have a minimum width of **60 feet**.

3. ***Lot Area Per Dwelling Unit:*** This minimum lot area per dwelling unit shall be **4,000 square feet**.

4. ***Lot Coverage:*** The maximum lot coverage shall be **50%** of the lot area.

5. ***Distance Between Buildings:*** The minimum distance between buildings on the same lot shall be **ten feet**.

ARTICLE 701.6. **PARKING REGULATIONS:** The parking regulations are as provided in Chapter 11, Section 1102. hereof.

ARTICLE 701.7. **SIGN REGULATIONS:** The sign regulations are as provided in Chapter 14, Section 1403. hereof.

ARTICLE 701.8. **OUTDOOR LIGHTING:** Any outdoor lighting used shall conform to the standards as provided in Chapter 11, Section 1112. hereof.

Date of Revisions			
*1	Revised 2-4-85	*3	Effective 8-6-99
*2	Revised 4-1-85		

SECTION 702. **R-3** (Multiple-Family Residential Zoning District), **R-4** (Multiple-Family Residential Zoning District) & **R-5** (Multiple-Family Residential Zoning District)*2

ARTICLE 702.1. ***Purpose:*** The principal purpose of these zoning districts are to provide for multiple-family residential developments in locations which are suitable and appropriate taking into consideration existing conditions, including present use of land, future land use needs, and the availability of public utilities. The minimum lot area required for each dwelling unit in each of the districts is as follows: **3,000 square feet for R-3**; **2,000 square feet for R-4**; and **1,000 square feet for R-5**. Principal uses permitted in these zoning districts include two-family dwellings, multiple-family dwellings and the uses permitted in the single-family residential zoning district.

ARTICLE 702.2. ***Use Regulations:*** A building or premises shall be used only for the following purposes:

1. Any use permitted in the R-2 Zoning District, subject to all the regulations specified in the use regulations for such R-2 Zoning District unless the use is otherwise regulated in this Section.

2. Two-family dwellings

3. Multiple-family dwellings

4. Group homes for not more than **ten persons** subject to the following performance criteria: *4 *5

a. If licensing is required by the State of Arizona for the use, proof of such licensure shall be available to the Department of Planning and Development prior to the use being established.

5. Accessory buildings and uses customarily incidental to the above uses including:

a. Private tennis courts provided that such courts are not constructed within **20 feet** of any adjoining property under other ownership and provided that tennis court fences or walls shall not exceed **12 feet** in height and further provided that any lights for the tennis courts shall be subject to a use permit and shall be placed so as to not direct or reflect light upon adjoining land, and subject lights shall be in conformance with standards in Chapter 11, Section 1112. (Outdoor Light Control Provisions) herein. More than **one tennis court** is permitted so long as the primary use of the property is residential and so long as the court or courts are accessory to the residential use and maintained exclusively for the use of residents of the parcel on which it is located. *1

b. Private swimming pools along with incidental installations, such as pumps and filters, provided such pools and incidental installations are located in other than the required front yard and provided such pools are set back from all lot lines a distance of not less than **three feet**. Pools and spas must meet all barrier requirements as provided in the current U.B.C. *6

ARTICLE 702.3. HEIGHT REGULATIONS: The height of buildings shall not exceed **40 feet** or **three stories**.

ARTICLE 702.4. YARD REGULATIONS: The required yards are as follows:

1. ***Front Yard:***

a. There shall be a front yard having a depth of not less than **20 feet**.

b. For through lots, a front yard shall be provided along both front lot lines.

c. Yards along each street side of corner lots shall have a width equal to not less than **half** the depth of the required front

yard. Yards along each street side of corner lots shall otherwise conform with regulations applicable to front yards.

2. ***Side Yard:*** There shall be a side yard on each side of a building having a width of not less than **five feet**.

3. ***Rear Yard:*** There shall be a rear yard having a depth of not less than **25 feet**.

ARTICLE 702.5. INTENSITY OF USE REGULATIONS: The intensity of use regulations are as follows:

1. ***Lot Area:*** Each lot shall have a minimum lot area of **6,000 square feet**.

2. ***Lot Width:*** Each lot shall have a minimum width of **60 feet**.

3. ***Lot Area Per Dwelling Unit:*** The minimum lot areas per dwelling unit shall be as follows:

   a. **R-3** Zoning District - **3,000 square feet** per dwelling unit

   b. **R-4** Zoning District - **2,000 square feet** per dwelling unit

   c. **R-5** Zoning District - **1,000 square feet** per dwelling unit

4. ***Lot Coverage:*** The maximum lot coverage shall be **50%** of the lot area.

5. ***Distance Between Buildings:*** The minimum distance between buildings on the same lot shall be **ten feet**.

ARTICLE 702.6. PARKING REGULATIONS: The parking regulations are as provided in Chapter 11, Section 1102. hereof.

ARTICLE 702.7. SIGN REGULATIONS: The sign regulations are as provided in Chapter 14, Section 1403. hereof.

Date of Revisions	
*1	Revised 4-1-85
*2	Revised 4-7-86 Effective 1-1-88
*4	Added 4-15-93
*5	Revised 1-20-94
*6	Effective 8-6-99

SECTION 801. C-S (Planned Shopping Center Zoning District)

ARTICLE 801.1. **PURPOSE:** The principal purpose of this zoning district is to provide for well designed and attractive retail shopping facilities on sites in appropriate locations to serve adjacent and nearby residential neighborhoods. Permitted uses in this zoning district include the retail sale of merchandise and services customarily considered as shopping center uses.

ARTICLE 801.2. **USE REGULATIONS:** A building or premises shall be used for the following purposes:

1. Retail sale of merchandise, services, recreational and otherwise, parking area and other facilities customarily considered as shopping center uses.

2. Uses permitted on the shopping center site, according to the rural or residential zoning district regulations in effect prior to the establishment of the C-S Zoning District on said site, as the only alternative in the event that the C-S Zoning District is not used for the purpose for which it was specifically intended; namely, a shopping center.

3. Emergency housing - Temporary shelter required due to a natural disaster or fire or other circumstances determined to constitute an emergency by the zoning inspector.[**5, *6]

4. Conditional uses may be allowed on any lot in this district as authorized in Chapter 13, Section 1303.[**5]

5. Temporary uses may be allowed on any lot in this district as authorized in Chapter 13, Section 1302.[**5]

6. Special uses may be allowed on any lot in this district as authorized in Chapter 13, Section 1301.[**5]

ARTICLE 801.3. **HEIGHT REGULATIONS:** The height of buildings shall not exceed **40 feet** or **three stories**.

ARTICLE 801.4. **YARD REGULATIONS:** The buildings shall set back from all lot lines bounding the shopping center site or in the absence of lot lines, the boundaries delineating the shopping center site, a distance of not less than **50 feet**.

ARTICLE 801.5. **INTENSITY OF USE REGULATIONS:** The maximum lot coverage shall be **25% of the area** in the shopping center site.

ARTICLE 801.6. **PARKING REGULATIONS:** The parking regulations are as provided in Chapter 11, Section 1102. hereof.[*4]

ARTICLE 801.7. **SIGN REGULATIONS:** The sign regulations are as provided in Chapter 14, Section 1404. hereof.

ARTICLE 801.8. **LOADING AND UNLOADING REGULATIONS:** The loading and unloading regulations are as provided in Chapter 11, Section 1103. hereof.

ARTICLE 801.9. **ADDITIONAL REGULATIONS:** The additional regulations are as follows:

1. The shopping center buildings shall be designed and built as a whole, unified, and single project.

2. Any part of the shopping center site not used for buildings or other structures, loading and access ways, or pedestrian walks shall be landscaped with grass, trees or shrubs.

3. Any outdoor lighting shall be in conformance with provisions in Chapter 11, Section 1112. hereof. Any outdoor lighting shall be placed so as to reflect light away from any adjoining rural or residential zoning district.[*1]

4. ***Walls and screening:***

   a. A solid wall, not less than **six feet** in height, shall be required along and adjacent to any side or rear property line abutting any rural or residential zone boundary, or any alley abutting such zone boundary at the time of development of the commercial property. Further, any access gates in said solid wall shall be constructed of view-obscuring material to provide effective site screening.[**2]

   b. The perimeter of any portion of a site not adjacent to a rural or residential zone boundary upon which any outdoor use of a commercial nature is permitted shall be enclosed to a height of not less than **six feet** by building walls, walls or fences of any view-obscuring material. No outdoor commercial use or enclosure thereof shall encroach into any required setback area adjacent to any street, nor shall any storage products or materials exceed the height of any such enclosure.

5. In any multi-phase commercial project, all areas of a parcel which have been graded or the surface disturbed in any way, and which are not currently under development shall be revegetated or surfaced to minimize wind-blown dust by a plan approved by the Department of Planning and Development.*5

ARTICLE 801.10. TIME LIMIT FOR CONSTRUCTION: Upon approving a plan of development, construction of the shopping center shall proceed as soon as practicable, and if reasonable progress is not being made within a period of **one year** ending after the date of such approval by the Board of Supervisors, the Commission may have the owners of the shopping center explain the delay, and if reasonable progress is not being made within a period of **two years** ending after the date of said approval, the Commission may initiate proceedings to rezone the area of the C-S Zoning District to the zoning district in existence prior to the adoption of the C-S Zoning District or to such other zoning district as it may deem suitable and appropriate.

ARTICLE 801.11. PROCEDURAL REGULATIONS: The C-S Zoning District may be established and made a part of the zoning district maps prior to approving a plan of development. However, before building permits are issued, a plan of development shall be submitted and approved by the Board of Supervisors after first referring same to the Commission for review and report in accordance with the following procedures:

1. The owners or agents of a site comprising an area of not less than **five acres** may submit to the Board of Supervisors a plan to develop all or at least **five acres** of that site as a Planned Shopping Center. The plan to develop said site may be submitted as a separate proposal, or as part of a Commercial Unit Plan of Development as set forth in Chapter 10, Section 1003. thereof. *7

2. The plan shall be referred to the Commission for its review, report and recommendation, and for public hearing. Notice and procedure for public hearing shall conform with the procedures prescribed in Chapter 3, Section 304. hereof.

3. The Commission having held public hearing shall then present its report and recommendation and the plan to the Board of Supervisors for consideration and public hearing. Notice and procedure for public hearing shall conform with the procedures prescribed in Chapter 3, Section 304. hereof.

4. The recommendation of the Commission shall include the reasons for approval or disapproval of the plan, and if recommended for approval, specific evidence and facts showing that the plan meets the requirements of the regulations for the C-S Zoning District.

5. The recommendation of the Commission may include reasonable additional requirements as to landscape treatment, including grading plans and planting plans, vehicular ingress and egress, signs, lighting, screening and setback of buildings.

6. The Commission may require of said owners or agents a market analysis showing the need for a shopping center in the location requested and the inadequacy of the existing zoning to meet this need, and such other information deemed necessary to achieve the purpose of the C-S Zoning District.

7. The shopping center site and the buildings and appurtenant facilities shall be in a single ownership, or under management or supervision of a central authority; or they shall be subject to other supervisory lease or ownership control as may be necessary to carry out the purpose of regulations relating to the C-S Zoning District.

8. The plan shall show that the proposed shopping center would conform with the requirements of regulations for the C-S Zoning District, and development of the shopping center shall be according to these requirements and the approved plan.

9. Amendments shall be processed in the same manner as the initial plan to develop a site as a Planned Shopping Center.

Date of Revisions			
*1	Revised 4-2-84	**5	Added 2-20-94
**2	Added 10-15-84	*6	Revised 6-5-96
*4	Revised 4-3-91	*7	Effective 5-16-98
*5	Revised 2-20-94		

SECTION 802. C-O (Commercial Office Zoning District) *1

ARTICLE 802.1. **PURPOSE:** The principal purpose of this zoning district is to provide for well designed and attractive business and professional office facilities on sites in appropriate locations. This zoning district would constitute a transition between other commercial land uses and residential neighborhoods.

Principal uses in this zoning district include professional, semi-professional and business office uses.

ARTICLE 802.2. **USE REGULATIONS:** A building or premise shall be used only for the following purposes:

1. Any business office in which chattels or goods, wares or merchandise are not commercially created, repaired, sold or exchanged.

2. Offices for accountant, architect, chiropodist, chiropractor, dentist, engineer, lawyer, minister, naturopath, osteopath, physician, surgeon, surveyor, optometrist, geologist, insurance broker, public stenographer, real estate broker, stock broker, advertising agency, talent agency, private employment agency, labor union, marriage counselor, private detective, telephone message service, professional membership organization, business association, collection agency and other similar professional and semi-professional work.

3. Banks, building and loan associations, savings and loan associations, title insurance companies, trust companies, credit unions, finance companies and investment companies.

4. Studios for photography, fine or commercial arts or other professional work.

5. Medical and clinical laboratories.

6. Post office.

7. Pharmacy, when in conjunction with a medical center consisting of offices occupied by **five or more doctors** provided that there shall be no outside entrance for business purposes, and that no sign or display be located so as to be visible from a public thoroughfare or adjacent property.

8. Service to the public of water, gas, electricity, telephone and cable television and sewage including wastewater treatment plants. The foregoing shall be deemed to include attendant facilities and appurtenances to these uses, including without limitation, distribution, collector and feeder lines, pumping or booster stations along pipelines, and substations along electric transmission lines. *6

9. Emergency housing - Temporary shelter required due to a natural disaster or fire or other circumstances determined to constitute an emergency by the zoning inspector.[*4, *5]

10. Conditional uses may be allowed on any lot in this district as authorized in Chapter 13, Section 1303.[*4]

11. Temporary uses may be allowed on any lot in this district as authorized in Chapter 13, Section 1302.[*4]

12. Special uses may be allowed on any lot in this district as authorized in Chapter 13, Section 1301.[*4]

ARTICLE 802.3. **HEIGHT REGULATIONS:** The height of buildings shall not exceed **30 feet** or **two stories** except that within **20 feet** of any rural or residential zoning district, no building shall exceed **15 feet** in height.

ARTICLE 802.4. **YARD REGULATIONS:** The required yards are as follows:

1. ***Front Yard:***

   a. There shall be a front yard having a depth of not less than **ten feet**.

   b. Where the frontage between **two intersecting streets** is located partly in the C-0 Zoning District and partly in a rural or residential zoning district, there shall be a front yard equal to the front yard required in the adjoining rural or residential zoning district but such yard need not exceed **25 feet** in depth.

2. ***Side Yard:***

   a. There shall be a side yard on each side of a building of not less than **five feet** unless otherwise provided herein.

   b. Where the lot is adjacent to a rural or residential zoning district, there shall be a side yard on the side of the lot adjacent to such rural or residential zoning district having a width of not less than **ten feet**.

   c. Where a corner lot abuts a rural or residential zoning district whether or not separated by an alley, there shall be a side

yard on the street side of such corner lot having a width of not less than **15 feet**.

3. ***Rear Yard:***

   a. There shall be a rear yard having a depth of not less than **five feet**.

ARTICLE 802.5. **INTENSITY OF USE REGULATIONS:** The intensity of use regulations are as follows:

1. ***Lot Area:*** The minimum lot area shall be **12,000 square feet**.

2. ***Lot Coverage:*** The maximum lot coverage shall be **35%** of the lot area.

3. ***Lot Width:*** Each lot shall have a minimum width of **60 feet**.

ARTICLE 802.6. **PARKING REGULATIONS:** The parking regulations are as provided in Chapter 11, Section 1102. hereof.

ARTICLE 802.7. **SIGN REGULATIONS:** The sign regulations are as provided in Chapter 14, Section 1404. hereof.

ARTICLE 802.8. **LOADING AND UNLOADING REGULATIONS:** The loading and unloading regulations are as provided in Chapter 11, Section 1103. hereof.

ARTICLE 802.9. **ADDITIONAL REGULATIONS*:*** The additional regulations are as follows:

1. All refuse collection areas shall be screened from view from all public streets.

2. There shall be a solid fence, wall and suitable planting **six feet** in height where the side or rear lot lines or boundaries of the lot area adjacent to a rural or residential zoning district.

   a. A solid wall, not less than **six feet** in height, shall be required along and adjacent to any side or rear property line abutting any rural or residential zone boundary, or any alley abutting such zone boundary at the time of development of the commercial property. Further, any access gates in said solid wall shall be constructed of view-obscuring material to provide effective site screening. *3

b. The perimeter of any portion of a site not adjacent to a rural or residential zone boundary upon which any outdoor use of a commercial nature is permitted, shall be enclosed to a height of not less than **six feet** in height by building walls, walls or fences of any view-obscuring material. No outdoor commercial use or enclosure thereof shall encroach into any required setback area adjacent to any street, nor shall any storage products or materials exceed the height of any such enclosure.

3. Any outdoor lighting shall be in conformance with provisions in Chapter 11, Section 1112. hereof. Any outdoor lighting shall be placed so as to reflect light away from any adjoining rural or residential zoning district. *2

4. In any multi-phase commercial project, all areas of a parcel which have been graded or the surface disturbed in any way, and which are not currently under development shall be revegetated or surfaced to minimize wind-blown dust by a plan approved by the Department of Planning and Development. *4

ARTICLE 802.10. LANDSCAPING REGULATIONS:

1. The required front yard of the lot shall be landscaped.

2. The required side yards shall be landscaped.

3. **Four percent** of the gross parking area shall be landscaped with grass, trees, shrubs, or natural vegetation.

4. Any part of the lot not used for buildings, other structures, parking and vehicular and pedestrian access shall be landscaped with grass, trees, shrubs or natural vegetation.

5. All landscaped areas shall be provided with water bibs or an automatic sprinkler system.

Date of Revisions	
*1	Added 12-12-77
*2	Revised 4-2-84
*3	Added 10-15-84
*4	Added 2-20-94
*5	Revised 6-5-96
*6	Effective 11-19-99

SECTION 803. C-1 (Neighborhood Commercial Zoning District) *1

ARTICLE 803.1. **PURPOSE:** The principal purpose of this zoning district is to provide for smaller shops and services in convenient locations to meet the daily needs of families in the immediate residential neighborhoods. Principal uses permitted in this zoning district include food markets, drugstores and personal service shops.

ARTICLE 803.2. **USE REGULATIONS:** A building or premises shall be used only for the following purposes:

1. Antique shops
2. Art galleries
3. Automobile parts and supplies
4. Bakery shops, including baking on the premises for on-site sales only.
5. Banks
6. Barber and beauty shops
7. Book, stationery and gift shops except adult oriented facilities as defined under Chapter 2.*2
8. Business schools (such as: real estate, secretarial, data processing), but not including trade schools.
9. Candy shops, including manufacturing of candy on the premises for on-site sales only.
10. Churches, including accessory columbariums provided that the building area of the columbarium shall not exceed **10%** of the total building area of the church building(s).*6
11. Cleaning agencies, laundry agencies, pressing establishments and self-service laundries, including self-service dry cleaning machines, provided there is no cleaning of clothes on the premises.
12. Clock and watch repair shops
13. Clothing and dry good shops, including clothing and costume rental.

14. Craft and hobby shops, with incidental craft or hobby instruction only.

15. Day nurseries and nursery schools, including a playground and playground equipment which shall be screened from any adjoining rural or residential zoning district.

16. Delicatessen shops

17. Dress shops

18. Drugstores and soda fountains

19. Fire stations, publicly or privately owned or operated

20. Florist shops

21. Gasoline service stations, provided all incidental repair work is conducted wholly within a completely enclosed building and space required for such repair work does not constitute more than **60%** of the floor area.

22. Grocery stores and meat markets, provided there is no slaughtering of animals or poultry on the premises.

23. Hardware shops

24. Household appliance shops

25. Ice cream shops, including manufacturing of ice cream on the premises for on-site sales only.

26. Interior decorator shops

27. Jewelry shops

28. Key, locksmith or gun shops

29. Liquor stores limited to retail sales of package goods for off-site consumption.

30. Offices

31. Photographer's and artist's studios

32. Precision, optical and musical instrument repair shops

33. Private schools operated as a commercial enterprise, except trade schools.

34. Public facilities such as libraries, museums, parks, playgrounds, community buildings including police stations, post offices and other community service buildings used for non-commercial non-profit purposes.

35. Public schools; elementary, high school and college

36. Radio and television shops, including repair

37. Restaurants and cafes, including drive-through service with no outside eating facilities, but not including those having dancing or shows, or drive-in car service. The sale of alcoholic beverages for on-site consumption only may be permitted as an accessory use subject to the following requirements:

    a. The kitchen facilities in the restaurant shall be no less than **20%** of the floor area.

    b. The floor plan of the restaurant shall be approved by the Department of Planning and Development.

38. Secretarial or answering services

39. Service to the public of water, gas, electricity, telephone, cable television and sewage including wastewater treatment plants. The foregoing shall be deemed to include attendant facilities and appurtenances to these uses, including, without limitation, distribution, collector and feeder lines, pumping or booster stations along pipelines, and substations along electric transmission lines.[*12]

40. Shoe repair shops

41. Tailor shops

42. Variety or notion stores

43. Videotape rental stores[*8]

44. Accessory buildings and uses customarily incidental to the above uses.

45. Emergency housing - Temporary shelter required due to a natural disaster or fire or other circumstances determined to constitute an emergency by the zoning inspector. *9, *11

46. Conditional uses may be allowed on any lot in this district as authorized in Chapter 13, Section 1303. *9

47. Temporary uses may be allowed on any lot in this district as authorized in Chapter 13, Section 1302. *9

48. Special uses may be allowed on any lot in this district as authorized in Chapter 13, Section 1301. *9

ARTICLE 803.3. **HEIGHT REGULATIONS:** The height of buildings shall not exceed **30 feet** or **two stories**, except that the height of any building or structure closer than **30 feet** to any rural or residential zone boundary shall not exceed the distance from said building or structure to the zone boundaries. Streets or alleys may be included in calculating distance.

ARTICLE 803.4. **YARD REGULATIONS:**

1. ***Front Yard:*** A minimum of **ten feet**, and further that where the frontage between **two intersecting streets** is located partly in the C-1 Zoning District, and partly in a rural or residential zoning district, there shall be a front yard equal to the front yard required in the adjoining rural or residential zoning district but such yard need not exceed **25 feet** in depth.

2. ***Side Yard:*** None required (see Chapter 8, Section 803., Article 803.3. - Height Regulations), except that:

   a. Where a lot is adjacent to a rural or residential zoning district, there shall be a side yard on the side of the lot adjacent to such rural or residential zoning district having a width of not less than **ten feet**.

   b. Where a corner lot abuts a rural or residential zoning district, whether or not separated by an alley, there shall be a side yard on the street side of such corner lot having a width of not less than **ten feet**.

c. If a side yard is otherwise provided, it shall have a width of not less than **three feet**.

3. ***Rear Yard:*** None required (see Chapter 8, Section 803., Article 803.3. - Height Regulations), except that where a lot abuts a rural or residential zoning district whether or not separated by an alley, there shall be a rear yard having a depth of not less than **25 feet**.

a. If a rear yard is otherwise provided, it shall have a depth of not less than **three feet**.

ARTICLE 803.5. INTENSITY OF USE REGULATIONS: The intensity of use regulations are as follows:

1. ***Lot Area:*** Each lot shall have a minimum area of **6,000 square feet**.

2. ***Lot Width:*** Each lot shall have a minimum width of **60 feet**.

3. ***Lot Coverage:*** The maximum lot coverage shall be **60%** of the lot area.

ARTICLE 803.6. PARKING REGULATIONS: The parking regulations are as provided in Chapter 11, Section 1102. hereof.

ARTICLE 803.7. SIGN REGULATIONS: The sign regulations are as provided in Chapter 14, Section 1404. hereof.

ARTICLE 803.8. LOADING AND UNLOADING REGULATIONS: The loading and unloading regulations are as provided in Chapter 11, Section 1103. hereof.

ARTICLE 803.9. ADDITIONAL REGULATIONS: The additional regulations are as follows:

1. All activity (except required on-site parking, loading or unloading) including incidental or accessory storage and display area shall be within a completely enclosed building, unless otherwise specifically noted herein.

2. Any outdoor lighting shall be in conformance with provisions in Chapter 11, Section 1112. hereof. Any outdoor lighting shall be placed so as to reflect light away from any adjoining rural or residential zoning district. *3

3. A building other than the residence of the family of the operator or caretaker employed on the premises of a commercial use shall not be used for dwellings unless approved as a Special Use by the Board of Supervisors. *5, *10

4. ***Walls and Screening:***

   a. A solid wall, not less than **six feet** in height, shall be required along and adjacent to any side or rear property line abutting any rural or residential zone boundary, or any alley abutting such zone boundary at the time of development of the commercial property. Further, any access gates in said solid wall shall be constructed of view-obscuring material to provide effective site screening. *4

   b. The perimeter of any portion of a site not adjacent to a rural or residential zone boundary upon which any outdoor use of a commercial nature is permitted shall be enclosed to a height of not less than **six feet** by building walls, walls or fences of any view-obscuring material. No outdoor commercial use or enclosure thereof shall encroach into any required setback area adjacent to any street, nor shall any storage products or materials exceed the height of any such enclosure.

5. In any multi-phase commercial project, all areas of a parcel which have been graded or the surface disturbed in any way, and which are not currently under development shall be revegetated or surfaced to minimize wind-blown dust by a plan approved by the Department of Planning and Development. *9

Date of Revisions			
*1	Revised 5-11-81	*8	Added and renumbered after subparagraph Ch. 8, Section 803.2.43
*2	Revised 6-1-81	*9	Added 2-20-94
*3	Revised 4-2-84	*10	Revised 5-6-94
*4	Added 10-15-84	*11	Revised 6-5-96
*5	Renumbered 1-7-85	*12	Effective 11-19-99
*6	Revised 4-10-89		

SECTION 804. C-2 (Intermediate Commercial Zoning District) *1

ARTICLE 804.1. PURPOSE: The principal purpose of this zoning district is to provide for the sale of commodities and the performance of services and other activities in

locations for which the market area extends beyond the immediate residential neighborhoods. Principal uses permitted in this zoning district include automobile sales and services, furniture stores, hotels and motels, travel trailer parks, restaurants, and some commercial recreation and cultural facilities such as movies and instruction in art and music. This zoning district is designed for application at major street intersections.

ARTICLE 804.2. **USE REGULATIONS:** A building or premises shall be used only for the following purposes:

1. Any use permitted in the C-1 Zoning District, subject to all the regulations specified in the use regulations for such C-1 Zoning District unless the use is otherwise regulated in this Section.

2. Adult oriented facilities as defined under Chapter 2, subject to the following conditions: *11

   a. Adult oriented facilities shall not be located within **1,500 feet** of any other adult oriented facility.

   b. Adult oriented facilities shall not be located within **1,500 feet** of:

      1. A church; or

      2. A public or private elementary or secondary school; or

      3. A public or private day care center, preschool, nursery, kindergarten, or similar use; or

      4. A public park or playground

   c. For purposes of measuring separation distances required in this section, the measurements shall be taken in a straight line from the closest exterior walls of any affected structures without regard to intervening structures or objects or political boundaries.

   d. An adult oriented business lawfully operating is not rendered in violation of these provisions by the subsequent location of a church, public or private elementary or secondary school, or public park within **1,500 feet** of the adult oriented business.

e. This provision shall not be construed as permitting any use or act which is otherwise prohibited or made punishable by law.

3. Art metal and ornamental iron shops.

4. Automobile laundries, provided steam cleaning is confined to a building.

5. Automobile repair shops and garages, including an outside vehicle storage area to be used for vehicles under repair which shall be completely screened from any street or surrounding property, and further provided all repair operations are conducted within a building.

6. New and used, automobile and golf cart sales, and rentals provided all sales, service, and repair activities are conducted within a building. If any outside display areas are provided, the site shall be subject to site plan approval by the Planning and Zoning Commission and Board of Supervisors. *10, *13

7. Awning and canvas stores.

8. Bars, including retail sales of package goods for off-site consumption, provided that there is no entertainment or music audible offsite.

9. Health spas and public gyms. *2

10. Blueprint, photostat and reproduction (copy) services.

11. Boat sales, including an outside display area, providing all sales and repair activities are conducted within a building and subject to site plan approval of the Planning and Zoning Commission and Board of Supervisors.

12. Cabinet and carpenter shops.

13. Catering establishments not utilizing any manufacturing process or outside storage of materials or vehicles.

14. Conservatories or studios: Art, dancing or music.

15. Department stores.

16. Drive-in restaurants and refreshment stands.

17. Electrical fixtures and appliance sales, repair and service.

18. Feed stores, inside storage only.

19. Funeral homes, mortuaries and chapels.

20. Furniture stores including: New, used, finished or unfinished merchandise.

21. Gas (butane or propane), retail sales of.[*6]

22. Hotels.

23. Laboratories, medical or dental.

24. Liquor stores.

25. Motels.

26. Nurseries, flower and plant sales, provided all incidental equipment and supplies including fertilizer and empty cans, are kept within a completely enclosed building or within an area enclosed on all sides by a solid fence or wall at least **six feet** in height and no goods, materials or objects are stacked higher than the fence or wall so erected.

27. Paint and wall paper stores.

28. Parking lots and public garages, subject to parking standards in Chapter 11, Section 1102.

29. Pet shops, not involving the treatment or boarding of cats, dogs or other small animals.

30. Plumbing shops.

31. Pool halls or billiard centers.

32. Radio and television broadcasting stations and studios, but not including transmitter towers and stations.

33. Rental services: Household, lawn, garden, sickroom or office equipment.

34. Restaurants and cafes, including patios, with or without cocktail lounges, provided there is no entertainment or music audible off-site. *14

35. Retail stores.

36. Taxidermists.

37. Theaters, but not including a drive-in theater and adult oriented facilities as defined under Chapter 2. *2

38. Tinsmith shops.

39. Trade schools.

40. Deleted 2-20-94

41, Upholstery shops.

42. Veterinary hospitals and clinics for animals, subject to*:*

    a. Animals shall not be boarded or lodged except for short periods of observation incidental to care or treatment.

    b. Animals shall be kept within a completely enclosed building, which shall be constructed and maintained as to prevent objectionable noise and odor outside the walls of the building.

    c. No open kennels or exercise runs will be permitted.

    d. All refuse shall be stored within the enclosed building or within odor proof containers.

43. Accessory buildings and uses customarily incidental to the above.

ARTICLE 804.3. **HEIGHT REGULATIONS:** The height of buildings shall not exceed **40 feet** or **three stories**, except that the height of any building or structure closer than **40 feet** to any rural or residential zone boundary shall not exceed that distance from said building or structure to the zone boundaries. Streets or alleys may be included in calculating distance.

ARTICLE 804.4. YARD REGULATIONS:

1. ***Front Yard:*** A minimum of **10 feet**, and further that where the frontage between **two intersecting streets** is located partly in the C-2 Zoning District and partly in a rural or residential zoning district there shall be a front yard equal to the front yard required in the ad-joining rural or residential zoning district but such yard need not exceed **25 feet** in depth.

2. ***Side Yard:*** None required (see Chapter 8, Section 804., Article 804.3. - Height Regulations) except that:

   a. Where a lot is adjacent to a rural or residential zoning district, there shall be a side yard on the side of a lot adjacent to such rural or residential zoning district having a width of not less than **ten feet**.

   b. Where a corner lot abuts a rural or residential zoning district whether or not separated by an alley, there shall be a side yard on the street side of such corner lot having a width of not less than **ten feet**.

   c. If a side yard is otherwise provided, it shall have a width of not less than **three feet**.

3. ***Rear Yard:*** None required (see Chapter 8, Section 804., Article 804.3. - Height Regulations) except that where a lot abuts a rural or residential zoning district whether or nor separated by an alley, there shall be a rear yard having a depth of not less than **25 feet**.

   a. If a rear yard is otherwise provided, it shall have a depth of not less than **three feet**.

ARTICLE 804.5. INTENSITY OF USE REGULATIONS: The intensity of use regulations are as follows:

1. ***Lot Area:*** Each lot shall have a minimum area of **6,000 square feet**.

2. ***Lot Width:*** Each lot shall have a minimum width of **60 feet**.

3. ***Lot Coverage:*** The maximum lot coverage shall be **60%** of the lot area.

ARTICLE 804.6. **PARKING REGULATIONS:** The parking regulations are as provided in Chapter 11, Section 1102. hereof.

ARTICLE 804.7. **SIGN REGULATIONS:** The sign regulations are as provided in Chapter 14, Section 1404. hereof.

ARTICLE 804.8. **LOADING AND UNLOADING REGULATIONS:** The loading and unloading regulations are as provided in Chapter 11, Section 1103. hereof.

ARTICLE 804.9. **ADDITIONAL REGULATIONS:** The additional regulations are as follows:

1. All activity (except required on-site parking, including loading and unloading areas), incidental or accessory storage and display areas shall be within a completely enclosed building unless otherwise specifically noted herein.

2. Any outdoor lighting shall be in conformance with provisions in Chapter 11, Section 1112. hereof. Any outdoor lighting shall be placed so as to reflect light away from any adjoining rural or residential zoning district. *3

3. A building other than the residence of the family of the operator or caretaker employed on the premises of a commercial use shall not be used for dwellings, unless approved as a Special Use by the Board of Supervisors. *5, *13

4. ***Walls and Screening:***

   a. A solid wall, not less than **six feet** in height, shall be required along and adjacent to any side or rear property line abutting any rural or residential zone boundary, or any alley abutting such zone boundary at the time of development of the commercial property. Further, any access gates in said solid wall shall be constructed of view-obscuring material to provide effective site screening.*4

   b. The perimeter of any portion of a site not adjacent to a rural or residential zone boundary upon which any outdoor use of a commercial nature is permitted shall be enclosed to a height of not less than **six feet** by building walls, walls or fences of any view-obscuring material. No outdoor commercial use or enclosure thereof shall encroach into any required setback area adjacent to any street, nor shall any storage products or materials exceed the height of any such enclosure.

5. In any multi-phase commercial project, all areas of a parcel which have been graded or the surface disturbed in any way, and which are not currently under development shall be revegetated or surfaced to minimize wind-blown dust by a plan approved by the Department of Planning and Development.*12

Date of Revisions			
*1	Revised 5-11-81	*10	Revised 5-16-90
*2	Revised 6-1-81	*11	Added 8-21-93
*3	Revised 4-2-84	*12	Added 2-20-94
*4	Added 10-15-84	*13	Revised 5-6-94
*5	Renumbered 1-7-85	*14	Effective 5-9-97
*6	Revised 4-1-85		

SECTION 805. C-3 (General Commercial Zoning District) *1

ARTICLE 805.1. **PURPOSE:** The principal purpose of this zoning district is to provide for commercial uses concerned with wholesale or distribution activities in locations where there is adequate access to major streets or highways. Principal uses permitted in this zoning district include retail and wholesale commerce and commercial entertainment.

ARTICLE 805.2. **USE REGULATIONS*:*** A building or premise shall be used only for the following:

1. Any use permitted in the C-2 Zoning District, subject to all the regulations specified in the use regulations for such C-2 Zoning District unless the use is otherwise regulated in this Section.

2. Amusement enterprises.

3. Auction sales, including swap meet operations.

4. Automobile sales, service and rental.

5. Boat sales, service and rental.

6. Bowling alleys.

7. Bus depots.

8. Dance halls and nightclubs, except adult oriented facilities as defined under Chapter 2. *2

9. Drive-in theaters.

10. Equipment rentals and sales, but not including equipment customarily used for heavy construction.

11. Frozen food lockers, including processing but not slaughtering of animals.

12. Hospitals and clinics for animals, provided animals are not boarded or lodged other than those being treated.

13. Wholesale ice distributing stations.

14. Landscape material sales provided all incidental equipment and supplies, including fertilizer and empty cans, are kept within a completely enclosed building or within an area enclosed on all sides by a solid fence or wall at least **six feet** in height, and no goods, materials or objects are stacked higher than the fence or wall so erected.

15. Lumber yards not including industrial milling or planning operations.

16. Miniature golf courses and driving ranges.

17. Mobile home, travel trailer and recreation vehicle sales and service.

18. Printing, lithography and publishing establishments.

19. Stone monument sales.

20. Commercial storage of mobile homes, travel trailers, recreation vehicles, boats and aircraft on sites of no less than **one acre.** *5

21. Truck stops, with customary accessory facilities including but not limited to restaurant, convenience retail, motel, truck wash, and minor repair facilities but not including major repair, freight storage, freight handling, warehousing or distribution facilities. **7

22. Wholesale stores.

23. Accessory buildings and uses customarily incidental to the above uses.

ARTICLE 805.3. **HEIGHT REGULATIONS:** The height of buildings shall not exceed **40 feet** or **three storie**s, except that the height of any building or structure closer than **40 feet** to any rural or residential zone boundary shall not exceed the distance from said building or structure to the zone boundaries. Streets or alleys may be included in calculating distance.

ARTICLE 805.4. **YARD REGULATIONS:**

1. ***Front Yard:*** A minimum of **ten feet**, and further that where the frontage between **two intersecting streets** is located partly in the C-3 Zoning District and partly in a rural or residential zoning district, there shall be a front yard equal to the front yard required in the ad-joining rural or residential zoning district but such yard need not exceed **25 feet** in depth.

2. ***Side Yard:*** None required (see Chapter 8, Section 805., Article 805.3. - Height Regulations) except that:

   a. Where a lot is adjacent to a rural or residential zoning district there shall be a side yard on the side of the lot adjacent to such rural or residential zoning district having a width of not less than **ten feet**.

   b. Where a corner lot abuts a rural or residential zoning district whether or not separated by an alley, there shall be a side yard on the street side of such corner lot having a width of not less than **ten feet**.

   c. If a side yard is otherwise provided, it shall have a width of not less than **three feet**.

3. ***Rear Yard:*** None required (see Chapter 8, Section 805., Article 805.3. - Height Regulations) except that where a lot abuts a rural or residential zoning district whether or not separated by an alley, there shall be a rear yard having a depth of not less than **25 feet**.

   a. If a rear yard is otherwise provided, it shall have a depth of not less than **three feet**.

ARTICLE 805.5. **INTENSITY OF USE REGULATIONS:** The intensity of use regulations are as follows:

1. ***Lot Area:*** Each lot shall have a minimum area of **6,000 square feet**.

2. ***Lot Width:*** Each lot shall have a minimum width of **60 feet**.

3. ***Lot Coverage:*** The maximum lot coverage shall be **60%** of the lot area.

ARTICLE 805.6. PARKING REGULATIONS: The parking regulations are as provided in Chapter 11, Section 1102. hereof.

ARTICLE 805.7. SIGN REGULATIONS: The sign regulations are as provided in Chapter 14, Section 1404. hereof.

ARTICLE 805.8. LOADING AND UNLOADING REGULATIONS: The loading and unloading regulations are as provided in Chapter 11, Section 1103. hereof.

ARTICLE 805.9. ADDITIONAL REGULATIONS: The additional regulations are as follows:

1. Site Enclosure and Screening Requirements: Commercial site and/or uses shall be enclosed to provide effective site screening from adjoining properties, uses or streets as follows:

   a. A solid wall, not less than **six feet** in height shall be required along and adjacent to any side or rear property line abutting any rural or residential zone boundary, or any alley abutting such zone boundary at the time of development of the commercial property. Further, any access gates in said solid wall shall be constructed of view-obscuring material to provide effective site screening.

   b. The perimeter of any portion of a site not adjacent to a rural or residential zone boundary upon which any outdoor use of a commercial nature is permitted shall be enclosed to a height of not less than **six feet** by building walls, walls or fences of any view-obscuring material. No outdoor commercial use or enclosure thereof shall encroach into any required setback area adjacent to any street, nor shall any storage products or materials exceed the height of any such enclosure.

2. Any outdoor lighting shall be in conformance with provisions in Chapter 11, Section 1112. hereof. Any outdoor lighting shall be

placed so as to reflect light away from any adjoining rural or residential zoning district. *3

3. A building other than the residence of the family of the operator or caretaker employed on the premises of a commercial use shall not be used for dwelling purposes unless approved as a Special Use by the Board of Supervisors. *4,*10

4. In any multi-phase commercial project, all areas of a parcel which have been graded or the surface disturbed in any way, and which are not currently under development shall be revegetated or surfaced to minimize wind-blown dust by a plan approved by the Department of Planning and Development.*9

Date of Revisions			
*1	Revised 5-11-81	*5	Revised 4-1-85
*2	Revised 6-1-81	**7	Added 4-10-89
*3	Revised 4-2-84	*9	Added 2-20-94
*4	Renumbered 1-7-85	*10	Revised 5-6-94

SECTION 901. IND-1 (Planned Industrial Zoning District)[*1]

ARTICLE 901.1. **PURPOSE:** The principal purpose of this zoning district is to provide sufficient space in appropriate locations for certain types of business and manufacturing uses that are quiet, attractive and well designed including appropriate screening and/or landscape buffers to afford locations close to existing residential uses, so that people can live and work in the same neighborhood. [*6]

ARTICLE 901.2. **USE REGULATIONS:** A building or premise shall be used only for the following purposes, and subject to procedural regulations as listed in Chapter 9, Section 901., Article 901.11. herein: [*4]

1. Art needlework, handweaving and tapestries.
2. Books, hand binding and tooling.
3. Compounding of cosmetics and pharmaceutical products.
4. Jewelry, manufacture from precious metals and minerals.
5. Laboratories, research, experimental and testing.
6. Manufacture and assembly of clay, leather, metal and glass products of a handicraft nature.
7. Manufacture and assembly of medical, dental and drafting instruments.
8. Manufacture and assembly of optical goods and equipment, watches, clocks and other similar precision instruments.
9. Manufacture and assembly of electrical or electronic apparatus, musical instruments, games and toys.
10. Motion picture producing.
11. Offices.
12. Radio and television broadcasting stations and studios, but not including transmitter towers and transmitter stations.
13. Warehousing, storage and wholesale distribution facilities.

14. Any other office, laboratory, manufacturing and assembling uses similar to those uses enumerated herein which do not create any danger to the public health, safety and general welfare in surrounding areas and which do not create any offensive noise, vibration, smoke, dust, odor, heat or glare and which, by reason of high value in relation to size and weight of merchandise received and shipped create very little truck traffic.

15. Accessory buildings and uses customarily incidental to the above uses.

16. Emergency housing - Temporary shelter required due to a natural disaster or fire or other circumstances determined to constitute an emergency by the zoning inspector. [**7, *9]

17. Conditional uses may be allowed on any lot in this district as authorized in Chapter 13, Section 1303. [**7]

18. Temporary uses may be allowed on any lot in this district as authorized in Chapter 13, Section 1302. [**7]

19. Special uses may be allowed on any lot in this district as authorized in Chapter 13, Section 1301. [**7]

20. Service to the public of water, gas, electricity, telephone and cable television and sewage including wastewater treatment plants. The foregoing shall be deemed to include attendant facilities and appurtenances to these uses, including without limitation, distribution, collector and feeder lines, pumping or booster stations along pipelines, and substations along electric transmission lines. [*10]

ARTICLE 901.3. **HEIGHT REGULATIONS:** The height of buildings shall not exceed **40 feet** or **three stories**, except that the height of any building or structure closer than **40 feet** to any rural or residential zone boundary shall not exceed the distance from said building or structure to the zone boundary, except that no building need be less than **ten feet** in height. Streets or alleys may be included in calculating distance.

ARTICLE 901.4. **YARD REGULATIONS:** The required yards are as follows: [*5]

1. ***Front Yard:*** [*6]

   a. All properties abutting a public street shall have an open setback area which shall be landscaped extending for the full

width of the property. This setback shall be parallel to the centerline of the street and shall be measured from the setback line or the ultimate right-of-way line of a local street, and shall be of a depth as indicated as follows:

1. Abutting any major street, section line road, State or Federal Highway not less than **20 feet**.

2. Abutting collector streets and midsection line roads and roads adjoining rural or residential zoning districts not less than **15 feet**. *7

3. Abutting local streets and interior streets of industrial subdivisions not less than **ten feet**.

b. For through lots, a front yard shall be provided along both front lot lines.

c. For corner lots the yard along each street side of such corner lot shall conform with the front yard regulations. *7

2. ***Side Yard:*** Where the side of a lot is adjacent to a rural or residential zoning district, there shall be a side yard having a width of not less than **30 feet**, of which a minimum of **10 feet** shall be landscaped and continuously maintained. (see Chapter 9, Section 901., Article 901.3. - Height Regulations). *7

3. ***Rear Yard:*** Where the rear of a lot is adjacent to a rural or residential zoning district there shall be a rear yard having a depth of not less than **30 feet**, of which a minimum of **10 feet** shall be landscaped and continuously maintained. (See Chapter 9, Section 901., Article 901.3. - Height Regulations). *6

ARTICLE 901.5. **INTENSITY OF USE REGULATIONS:** The intensity of use regulations are as follows: *5

1. ***Lot Area:*** Each lot shall have a minimum lot area of **35,000 square feet**. *6

2. ***Lot Width***: Each lot shall have a minimum width of **150 feet**. *6

3. ***Lot Coverage:*** The maximum lot coverage shall be **60%** of the lot area.

4. ***Volume Ratio:*** The volume of all structures on a lot shall not exceed the product of the lot area in square feet multiplied by **nine feet**. *6

ARTICLE 901.6. PARKING REGULATIONS: The parking regulations are as provided in Chapter 11, Section 1102. hereof except as provided herein. *4, *6

ARTICLE 901.7. SIGN REGULATIONS: The sign regulations are as provided in Chapter 14, Section 1405. hereof.

ARTICLE 901.8. LOADING AND UNLOADING REGULATIONS: The loading and unloading regulations are as provided in Chapter 11, Section 1103. hereof except as provided herein. *4, *6

ARTICLE 901.9. ADDITIONAL REGULATIONS: The additional regulations are as follows: *5

1. All uses except for parking, loading, unloading and storage shall be conducted within a completely enclosed building.

2. Any outdoor lighting shall be in conformance with provisions in Chapter 11, Section 1112. hereof. Any outdoor lighting shall be placed so as to reflect light away from any adjoining rural or residential zoning district. *2

3. Required yards adjacent to any street shall be landscaped and shall not be occupied by any use or structure including parking or loading spaces except for drives and roadways, signs and lighting as permitted in this Ordinance. *6

4. Site Enclosure and Screening Requirements: Industrial sites and/or uses shall be enclosed to provide effective site screening from adjoining properties, uses or streets by the use of walls, berms and landscape plantings or combinations thereof as follows: *6

   a. Adjacent to any rural or residential zone, automobile parking shall be screened from view.

   b. A solid masonry, concrete or earthen product wall not less than **six feet** in height or approved landscaped berms, landscape screening or combinations thereof shall be required along and adjacent to any side or rear property line abutting any rural or residential zone boundary, or any alley abutting such zone boundary. Further, any access gates shall be

constructed of view-obscuring materials to provide effective site screening. Approval of the alternative screening methods listed above shall be by the Board of Supervisors upon recommendation of the Commission. *6

c. The perimeter of any portion of a site not adjacent to a rural or residential zoning boundary upon which any outdoor use of an industrial nature is permitted, shall be screened to a height of not less than **six feet** in height by building walls, walls or fences of any view obscuring material, approved landscaped berms, landscape screening or combinations thereof. No outdoor industrial use or enclosure thereof shall encroach into any required setback area adjacent to any street, nor shall any storage products or materials exceed the height of any such enclosure. Approval of the alternative screening methods listed above shall be by the Board of Supervisors upon recommendation of the Commission. *6

d. Landscape Requirements: Minimum site landscape requirements are as follows: (Note: The Board of Supervisors or the Planning and Zoning Commission may include additional landscape requirements.) *6

1. Any part of a site not used for buildings, parking, driveways, storage, loading, sidewalks, etc. shall be landscaped and maintained.

2. Not less than **2%** of all vehicle storage or parking areas, nor less than **8%** of the total net lot area, shall be landscaped and continuously maintained in a healthy condition. The landscaped area within the storage and parking areas shall not be included in the calculation for the minimum **8%** landscaping requirement for the total net lot area.

3. Landscaped areas shall include an approved mixture of drought tolerant or other plant materials, and organic and non-organic ground cover materials. The approval of the above mixture of landscape materials shall be by the Board of Supervisors upon recommendation of the Commission.

4. An automatic irrigation system shall be provided and maintained to all landscaped areas requiring water. *6

5. All landscaped areas adjacent to vehicular parking and access areas shall be protected by **six inch** vertical concrete curbing in order to control storm water flows and minimize damage by vehicular traffic. *6

5. In any multi-phase industrial project, all areas of a parcel which have been graded or the surface disturbed in any way, and which are not currently under development shall be revegetated or surfaced to minimize wind-blown dust by a plan approved by the Department of Planning and Development. *7

ARTICLE 901.10. EXPIRATION OF APPROVAL: Approval of a Plan of Development by the Board of Supervisors shall be valid for **two years**, in which time construction of the project shall commence or the use authorized shall be initiated. Prior to the expiration of the approval, the developer may request an extension of time for the Commission to initiate the project. The Commission upon a finding of substantial grounds may grant an extension of time up to **one year**. *3

ARTICLE 901.11. PROCEDURAL REGULATIONS: The IND-1 Zoning District may be established and made a part of the zoning district maps prior to approving a Plan of Development, however, before Zoning Clearances are issued, a Plan of Development shall be submitted to and approved by the Board of Supervisors, after first referring same to the Commission for review and report in accordance with the following procedures: *4

1. The owners or authorized agents of all or part of the land in the IND-1 Zoning District shall submit prior to the issuance of a building permit a Plan of Development to the Board of Supervisors showing the location and arrangement of the buildings, structures and other improvements upon the land, including but not limited to, preliminary grading and drainage plans, walks, roadways, interior and boundary streets, vehicle parking areas, outside storage areas, perimeter screening, lighting, landscaping areas and signs. *6

2. The plan shall be referred to the Commission for its review, report and recommendation to the Board of Supervisors.

3. After review of the plan, the Commission shall present its report and recommendation to the Board of Supervisors for consideration and action.

4. The recommendation of the Commission shall include its reasons for approval or disapproval of the plan, and if recommended for approval, specific evidence and facts showing that the plan meets the requirements of the regulations for the IND-1 Zoning District.

5. The recommendation of the Commission shall include reasonable additional plan requirements, including but not limited to grading plans, landscape plans and landscaping treatments, vehicular ingress/egress and parking, off-site improvements (such as street, curbs and sidewalks, screening of outside storage areas, lighting, utility services and setbacks of buildings or structures). *6

6. The plan shall show that the proposed use or uses would conform with the requirements of regulations for the IND-1 Zoning District, and development of the subject parcel of land shall be according to these requirements and the approved plan.

7. For Industrial Uses, which were developed prior to **October 15, 1984**, an as-built plan may serve as the plan of development. When the owner or authorized agent wants to make a change on the property, this as-built plan indicating the changes may be submitted. The Zoning Inspector may approve changes as long as any expansion is part of the existing land use, does not conflict with existing codes, does not exceed one hundred percent of the area of the original development, and does not adversely impact the surrounding areas or drainage conditions. These changes may include, but are not limited to parking covers, interior remodeling, additions to the buildings or new buildings. *8

Date of Revisions			
*1	Revised 4-9-79	*7	Revised 2-20-94
*2	Revised 4-2-84	**7	Added 2-20-94
*3	Revised 10-15-84	*8	Added 5-3-95
*4	Revised/Renumbered 10-15-84	*9	Revised 6-5-96
*5	Renumbered 10-15-84	*10	Effective 11-19-99
*6	Revised 1-25-88		

SECTION 902. IND-2 (Light Industrial Zoning District) *2

ARTICLE 902.1. **PURPOSE:** The principal purpose of this zoning district is to provide for light industrial uses in locations which are suitable and appropriate taking into consideration the land uses on adjacent or nearby properties, access to a major street or highway, rail service or other means of transportation, and the availability of public utilities. Principal uses permitted in this zoning

district include the manufacture, compounding, processing, packaging or treatment of materials which do not cause or produce objectionable effects that would impose hazard to adjacent or other properties by reason of smoke, soot, dust, radiation, odor, noise, vibration, heat, glare, toxic fumes, or other conditions that would affect adversely the public health, safety and general welfare.

ARTICLE 902.2. **USE REGULATIONS:** A building or premise shall be used only for the following purposes, and subject to procedural regulations as listed in Chapter 9, Section 902., Article 902.11. herein. *5

1. Any use permitted in the **IND-1** Zoning District. Any use permitted in the **C-3** Zoning District provided such use has a primary purpose of providing services for existing industrial uses in the area with only incidental sales/service provided for the general public, subject to all the regulations in the use regulations for the IND-2 Zoning District unless the use is otherwise regulated in this article except that the following uses shall be prohibited: mobile home parks, travel trailer parks, mobile home subdivisions, resort hotels, dwellings and mobile homes, other than the residence, or **one mobile home**, of the family of the operator or caretaker employed on the premise of a commercial or industrial use. *1, *8

2. Aircraft firms including sales, service and rental.

3. Bakeries, wholesale.

4. Bottling plants or breweries.

5. Cleaning plants, including carpets and dyeing.

6. Construction equipment, including sales, service, rental and storage.

7. Dairy products, processing of.

8. Farms as defined in Chapter 2.

9. Laboratories, experimental, photo or motion picture, research or testing.

10. Manufacturing, compounding, assembling, processing, packaging or treatment of products such as candy, drugs, perfumes, pharmaceuticals, perfumed toilet soaps, toiletries, but not including the refining or rendering of fats and oils.

11. Manufacturing, compounding, assembling or treatment of articles or merchandise from the following previously prepared materials: bone, cellophane, canvas, cloth, cork, feathers, felt, fiber, fur, glass, hair, leather, paper, plastics, precious or semi-precious metals or stones, light sheet metal, shell, textiles, tobacco, wire, yarns, wood not involving planing mills, and paint not employing a boiling process.

12. Manufacturing or assembly of electrical appliances, electronic instruments and devices, optical goods, precision instruments, radios and phonographs, including the manufacture of small parts only, such as coils, condensers, transformers and crystal holders.

13. Manufacture of pottery and figurines or other similar ceramic products using only previously pulverized clay.

14. Packing houses, fruit or vegetable not including processing.

15. Training centers, industrial.

16. Truck terminals, including service and storage.

.

17. Warehousing, storage and wholesale distribution facilities.

18. Any other office, laboratory, manufacturing and assembly uses similar to those uses enumerated herein which do not create any danger to the public health, safety and general welfare in surrounding areas and which do not create any offensive noise, vibration, smoke, dust, odor, heat or glare, and which by reason of high value in relation to size and weight of merchandise received and shipped create very little truck traffic.

19. Accessory buildings and uses customarily incidental to the above uses.

ARTICLE 902.3. **HEIGHT REGULATIONS:** The height of buildings shall not exceed **40 feet** or **three stories,** except that the height of any building or structure closer than **40 feet** to any rural or residential zone boundary shall not exceed the distance from said building or structure to the zone boundary except that no building need be less than **ten feet** in height. Streets or alleys may be included in calculating distance.

ARTICLE 902.4. **YARD REGULATIONS:** Yards are required as follows:

1. ***Front Yard:***

   a. All properties abutting a public street shall have an open setback area extending for the full width of the property. This setback shall be parallel to the centerline of the street and shall be measured from the setback line or the ultimate right-of-way line of a local street, and shall be of a depth as indicated below:

      1. Abutting any major street, section line road, State or Federal highway not less than **20 feet**.

      2. Abutting collector streets and midsection line roads not less than **15 feet**.

      3. Abutting local streets and interior streets of industrial subdivision not less than **ten feet**.

   b. Where the frontage between **two** intersecting streets is located partly in the IND-2 Zoning District and partly in a rural, residential or commercial zoning district, there shall be a front yard equal to the front yard required in the adjoining rural, residential or commercial zoning district, but such yard need not exceed **25 feet** in depth.

2. ***Side Yard:*** None required (see Chapter 9, Section 902., Article 902.3. - Height Regulations) except that:

   a. Where a lot is adjacent to a rural or residential zoning district, there shall be a side yard on the side of the lot adjacent to such rural or residential zoning district having a width of not less than **five feet**.

   b. Where a corner lot abuts a rural or residential zoning district, whether or not separated by an alley, there shall be a side yard on the street side of such corner lot having a width of not less than **ten feet**.

   c. If a side yard is otherwise provided it shall have a width of not less than **three feet**.

3. ***Rear Yard:*** None required (see Chapter 9, Section 902., Article 902.3. - Height Regulations) except that where a lot abuts a rural or

residential zoning district whether or not separated by an alley, there shall be a rear yard having a depth of not less than **25 feet**.

ARTICLE 902.5. INTENSITY OF USE REGULATIONS:

1. ***Lot Area:*** Each lot shall have a minimum area of **6,000 square feet**.

2. ***Lot Width:*** Each lot shall have a minimum width of **60 feet**.

3. ***Lot Coverage:*** The maximum lot coverage shall be **60%** of the lot area.

ARTICLE 902.6. PARKING REGULATIONS: The parking regulations are as provided in Chapter 11, Section 1102. hereof.

ARTICLE 902.7. SIGN REGULATIONS: The sign regulations are as provided in Chapter 14, Section 1405. hereof.

ARTICLE 902.8. LOADING AND UNLOADING REGULATIONS: The loading and unloading regulations are as provided in Chapter 11, Section 1103. hereof.

ARTICLE 902.9. ADDITIONAL REGULATIONS: The additional regulations are as follows:

1. All uses except for parking, loading, unloading or storage shall be conducted within a completely enclosed building.

2. Any outdoor lighting shall be in conformance with provisions in Chapter 11, Section 1112. hereof. Any outdoor lighting shall be placed so as to reflect light away from any adjoining rural or residential zoning district. *4

3. Site Enclosure and Screening Requirements: Industrial sites and/or uses shall be enclosed to provide effective site screening from adjoining properties, uses or streets as follows:

   a. Adjacent to any rural or residential zone automobile parking shall be screened from view.

   b. A solid masonry wall not less than **six feet** in height shall be required along and adjacent to any side or rear property line abutting any rural or residential zone boundary, or any alley abutting such zone boundary. Further, any access gates shall

be constructed of view-obscuring material to provide effective site screening.

c. The perimeter of any portion of a site not adjacent to a rural or residential zone boundary upon which any outdoor use of an industrial nature is permitted shall be enclosed to a height of not less than **six feet** by building walls, walls or fences of any view-obscuring material. No outdoor industrial use or enclosure thereof shall encroach into any required setback area adjacent to any street, nor shall any storage products or materials exceed the height of any such enclosure.

4. All uses shall be maintained in such a manner that they are neither obnoxious nor offensive by reason of emission of odor, dust, smoke, gas, noise, vibration, electromagnetic disturbance, radiation or other similar causes detrimental to the public health, safety or general welfare.

5. In any multi-phase industrial project, all areas of a parcel which have been graded or the surface disturbed in any way, and which are not currently under development shall be revegetated or surfaced to minimize wind-blown dust by a plan approved by the Department of Planning and Development. *9

ARTICLE 902.10. EXPIRATION OF APPROVAL: Approval of a Plan of Development by the Board of Supervisors shall be valid for **two years**, in which time construction of the project shall commence or the use authorized shall be initiated. Prior to expiration of the approval, the developer may request an extension of time from the Commission to initiate the project. The Commission upon a finding of substantial grounds may grant an extension of time up to **one year**. **5

ARTICLE 902.11. PROCEDURAL REGULATIONS: The IND-2 Zoning District may be established and made a part of the zoning district maps prior to approving a Plan of Development; however, before zoning clearances are issued, a Plan of Development shall be submitted to and approved by the Board of Supervisors after first referring same to the Commission for review and report in accordance with the following procedures:*5

1. The owners or authorized agents of all or part of the land in the IND-2 Zoning District shall submit, prior to the issuance of a building permit, a Plan of Development to the Board of Supervisors showing the location and arrangement of buildings, structures and other improvements upon the land, including but not limited to preliminary

grading and drainage plans, walks, roadways, interior and boundary streets, vehicle parking areas, outside storage areas, perimeter screening, lighting, landscaping and signs.

2. The plan shall be referred to the Commission for its review, report and recommendation to the Board of Supervisors.

3. After review of the plan, the Commission shall present its report and recommendation to the Board of Supervisors for consideration and action.

4. The recommendation of the Commission shall include its reasons for approval or disapproval of the plan, and if recommended for approval, specific evidence and facts showing that the plan meets the requirements of the regulations for the IND-2 Zoning District.

5. The recommendation of the Commission may include reasonable additional plan requirements, including but not limited to grading plans and planting plans, vehicular ingress/egress and parking, off-site improvements (such as streets, curbs and sidewalks), screening of outside storage areas, lighting and setbacks of buildings or structures.

6. The plan shall show that the proposed use or uses conform with the requirements of regulations for the IND-2 Zoning District, and development of the subject parcel of land shall be according to these requirements and the approved plan.

7. For Industrial Uses that were developed prior **to October 15, 1984**, an as-built plan may serve as the plan of development. When the owner or authorized agent wants to make a change on the property, this as-built plan indicating the changes may be submitted. The Zoning Inspector may approve changes as long as any expansion is part of the existing land use, does not conflict with existing codes, does not exceed **100%** of the area of the original development, and does not adversely impact the surrounding areas or drainage conditions. These changes may include, but are not limited to parking covers, interior remodeling, additions to the buildings or new buildings. *10

Date of Revisions			
*1	Revised 3-29-71	**5	Added 10-15-84
*2	Revised 4-9-79	*8	Revised 5-16-90
*4	Revised 4-2-84	*9	Added 2-20-94
*5	Revised 10-15-84	*10	Added 5-3-95

SECTION 903. IND-3 (Heavy Industrial Zoning District) *2

ARTICLE 903.1. **PURPOSE:** The principal purpose of this zoning district is to provide for heavy industrial uses in locations which are suitable and appropriate, taking into consideration land uses on adjacent or nearby properties, access to a major street or highway, rail service or other means of transportation, and the availability of public utilities. Principal uses permitted in this zoning district include the industrial uses that are not permitted in any other zoning district.

ARTICLE 903.2. **USE REGULATIONS:** A building or premise shall be used only for any industrial use not in conflict with any Ordinance of Maricopa County, and subject to procedural regulations as listed in Chapter 9, Section 903., Article 903.11. herein. *4

ARTICLE 903.3. **HEIGHT REGULATIONS:** The height of buildings shall not exceed **40 feet** or **three stories**, except that the height of any building or structure closer than **40 feet** to any rural or residential zone boundary shall not exceed the distance from said building or structure to the zone boundaries, except that no building need be less than **ten feet** in height. Streets or alleys may be included in calculating distance.

ARTICLE 903.4. **YARD REGULATIONS:** Yards are required as follows:

1. ***Front Yard:***

   a. All properties abutting a public street shall have an open setback area extending for the full width of the property. This setback shall be parallel to the centerline of the street and shall be measured from the setback line or the ultimate right-of-way line of a local street, and shall be of a depth as indicated below:

      1. Abutting any major street, section line road, State or Federal highway not less than **20 feet**.

      2. Abutting collector streets and midsection line roads not less than **15 feet**.

      3. Abutting local streets and interior streets of industrial subdivision not less than **ten feet**.

   b. Where the frontage between **two intersecting streets** is located partly in the IND-3 Zoning District and partly in a rural,

residential or commercial zoning district, there shall be a front yard equal to the front yard required in the adjoining rural, residential or commercial zoning district, but such yard need not exceed **25 feet** in depth.

2. ***Side Yard:*** None required (see Chapter 9, Section 903., Article 903.3. - Height Regulations) except that:

   a. Where a lot is adjacent to a rural or residential zoning district, there shall be a side yard on the side of the lot adjacent to such rural or residential zoning district having a width of not less than **five feet**.

   b. Where a corner lot abuts a rural or residential zoning district whether or not separated by an alley, there shall be a side yard on the street side of such corner lot having a width of not less than **ten feet**.

   c. If a side yard is otherwise provided it shall have a width of not less than **three feet**.

3. ***Rear Yard:*** None required (see Chapter 9, Section 903., Article 903.3. - Height Regulations) except that where a lot abuts a rural or residential zoning district whether or not separated by an alley, there shall be a rear yard having a depth of not less than **25 feet**.

ARTICLE 903.5. INTENSITY OF USE REGULATIONS:

1. ***Lot Area:*** Each lot shall have a minimum area of **6,000 square feet**.

2. ***Lot Width:*** Each lot shall have a minimum width of **60 feet**.

3. ***Lot Coverage:*** The maximum lot coverage shall be **60%** of the lot area.

ARTICLE 903.6. PARKING REGULATIONS: The parking regulations are as provided in Chapter 11, Section 1102. hereof.

ARTICLE 903.7. SIGN REGULATIONS: The sign regulations are as provided in Chapter 14, Section 1405. hereof.

ARTICLE 903.8. LOADING AND UNLOADING REGULATIONS: The loading and unloading regulations are as provided in Chapter 11, Section 1103. hereof.

ARTICLE 903.9. **ADDITIONAL REGULATIONS:** The additional regulations are as follows: *1

1. A building or premise other than the residence, or **one** mobile home of the family of the operator or caretaker employed on the premise of a commercial or industrial use shall not be used for dwellings, mobile home parks, travel trailer parks, mobile home subdivisions and resort hotels.

2. Any outdoor lighting shall be in conformance with provisions in Chapter 11, Section 1112. hereof. Any outdoor lighting shall be placed so as to reflect light away from any adjoining rural or residential zoning district. *3

3. Site Enclosure and Screening Requirements: Industrial sites and/or uses shall be enclosed to provide effective site screening from adjoining properties, uses or streets as follows*:*

    a. Adjacent to any rural or residential zone, automobile parking shall be screened from view.

    b. A solid masonry wall, not less than **six feet** in height shall be required along and adjacent to any side or rear property line abutting any rural or residential zone boundary, or any alley abutting such zone boundary. Further, any access gates shall be constructed of view-obscuring material to provide effective site screening.

    c. The perimeter of any portion of a site not adjacent to a rural or residential zone boundary upon which any outdoor use of any industrial nature is permitted shall be enclosed to a height of not less than **six feet** by building walls, walls or fences of any view-obscuring material. No outdoor industrial use or enclosure thereof shall encroach into any required setback area adjacent to any street, nor shall any storage products or materials exceed the height of any such enclosure.

4. Signs shall be subject to the same provisions applying to signs when located in the **IND-2** Zoning District.

5. In any multi-phase industrial project, all areas of a parcel which have been graded or the surface disturbed in any way, and which are not currently under development shall be revegetated or surfaced to

minimize wind-blown dust by a method or plan approved by the Department of Planning and Development. *5

ARTICLE 903.10. EXPIRATION OF APPROVAL: Approval of a plan of development by the Board of Supervisors shall be valid for **two years**, in which time construction of the project shall commence or the use authorized shall be initiated. Prior to expiration of the approval, the developer may request an extension of time from the Commission to initiate the project. The Commission upon a finding of substantial grounds may grant an extension of time up to **one year**. **4

ARTICLE 903.11. PROCEDURAL REGULATIONS: *4

1. The owners or authorized agents of all or part of the land in the IND-3 Zoning District shall submit prior to the issuance of a building permit, a Plan of Development to the Board of Supervisors showing the location and arrangement of buildings, structures and other improvements upon the land, including but not limited to preliminary grading and drainage plans, walks, roadways, interior and boundary streets, vehicle parking areas, outside storage areas, perimeter screening, lighting, landscaping and signs.

2. The plan shall be referred to the Commission for its review, report and recommendation to the Board of Supervisors.

3. After review of the plan, the Commission shall present its report and recommendation to the Board of Supervisors for consideration and action.

4. The recommendation of the Commission shall include its reasons for approval or disapproval of the plan, and if recommended for approval, specific evidence and facts showing that the plan meets the requirements of the regulations for the IND-3 Zoning District.

5. The recommendation of the Commission may include reasonable, additional plan requirements, including but not limited to grading plans and planting plans, vehicular ingress/egress and parking, off-site improvements (such as streets, curbs and sidewalks), screening of outside storage areas, lighting and setbacks of buildings or structures.

6. The plan shall show that the proposed use or uses conform with the requirements of regulations for the IND-3 Zoning District, and

development of the subject parcel of land shall be according to these requirements and the approved plan.

7. For Industrial Uses which were developed prior to **October 15, 1984**, an as-built plan may serve as the plan of development. When the owner or authorized agent wants to make a change on the property, this as-built plan indicating the changes may be submitted. The Zoning Inspector may approve changes as long as any expansion is part of the existing land use, does not conflict with existing codes, does not exceed one hundred percent of the area of the original development, and does not adversely impact the surrounding areas or drainage conditions. These changes may include, but are not limited to parking covers, interior remodeling, additions to the buildings or new buildings. *6

Date of Revisions			
*1	Revised 3-29-70	**4	Added 10-15-84
*2	Revised 4-9-79	*5	Added 2-20-94
*3	Revised 4-2-84	*6	Added 5-3-95
*4	Revised 10-15-84		

SECTION 1001. PAD (Planned Area of Development)[*1]

ARTICLE 1001.1. PURPOSE: The Planned Area Development (PAD) Overlay Zoning District is intended to accomplish the following:

1. Permit and encourage the unified planning of large areas in order to achieve the mixture, variety and cohesiveness of land uses and amenities that such large scale planning makes possible.

2. Establish development parameters for land uses, densities and intensities, and design standards, while allowing final detailed site plans and parcel descriptions to be deferred to the time of subdividing or site planning.

3. Assure both the County and the property owner that the development approved under a PAD may be carried out over a specified time.

ARTICLE 1001.2. GENERAL PROVISIONS:

1. The PAD District is an overlay zoning district which may be combined with any of the zoning districts set forth in this Ordinance, including Rural and Residential Districts, Commercial Districts, Industrial Districts, Unit Plans of Development (RUPD, CUPD and IUPD), and Special Uses (SUP).

2. The minimum site area for a PAD shall be **160 acres**.

3. Parameters for development are established through approval of a General Development Plan for the entire PAD site. Prior to development on any site within a PAD, approval of Specific Development Plans is required. Specific Development Plans provide the details of development for individual development parcels in the PAD.

ARTICLE 1001.3. USE REGULATIONS:

1. Uses permitted within the PAD District shall be limited to those permitted in the zoning districts with which the PAD District is combined, as set forth in the General Development Plan.

2. Height regulations, yard regulations, and intensity of use regulations shall be those required in the zoning districts with which the PAD District is combined, as set forth in the General

Development Plan. Variations in these development standards may be approved through concurrent use of Unit Plans of Development (RUPD, CUPD and IUPD) in combination with the PAD and underlying zoning districts.

ARTICLE 1001.4. REQUIRED PLAN SUBMITTAL:

1. Applications for a PAD shall be filed and processed in the same manner as other amendments to the Zoning Ordinance. Notice and procedures for public hearings shall conform to the procedures prescribed in Chapter 3, Section 304.

2. The PAD application shall be accompanied by a General Development Plan which shall consist of the following:

   a. Map(s) showing at least the following:

      1. Boundary of the proposed PAD District.

      2. General boundaries, approximate acreage, and proposed land use of each development parcel (including the different types and densities of residential use), and the corresponding zoning district for each land use.

      3. General location of any known public uses, such as schools, parks, recreational facilities and trails.

      4. Approximate location of all arterial and collector streets.

      5. Landscaping concept plan.

      6. Topographic character of the land, with identification of any areas in the Hillside District (see Chapter 12, Section 1201.).

      7. Conceptual/preliminary drainage plan.

      8. General phasing boundaries.

   b. Development narrative including at least the following:

1. Description of the proposed PAD and the nature of the development proposed.

2. Discussion of the internal and external land use relationships and compatibility.

3. Discussion of the proposed public features provided.

4. Identification of utilities and services to be provided for the development.

5. Schedule of development parcels listing land use, proposed underlying zoning district, approximate acreage, density or intensity limit, and applicable development standards.

6. Overall density proposed.

7. Landscaping concepts.

8. Phasing plan and anticipated timing for implementation of the development.

9. Master street plan, including street widths and cross-sections.

10. Traffic report including information on trip generation for each development unit, traffic volumes and capacity analysis.

11. Restrictive covenants (if applicable).

12. Legal description of the PAD boundary.

3. Upon approval of the General Development Plan by the Board of Supervisors, the PAD Zoning District shall be established on the site in accordance with provisions of Chapter 3, Section 304. However, no development shall be permitted until a Specific Development Plan has been approved for the parcel to be developed.

4. The Commission may recommend and the Board of Supervisors may approve conditions to the approval of a PAD including maximum density/intensity, maximum building heights, maximum lot coverage, minimum setbacks, timing and phasing, and other

reasonable considerations deemed necessary to promote the purpose of this Ordinance.

5. Major changes to an approved PAD General Development Plan shall be processed in the same manner as the initial application. Minor amendments may be administratively approved by the Department of Planning and Development. For the purposes of this section the following shall be considered a major change to the approved PAD General Development Plan:

   a. A change in individual zoning district category.

   b. A change in individual zoning district area by **5%** or more.

   c. A change in the number or a substantial change in the location of major streets.

   d. Any change that is determined by the Planning Department Director to warrant review by the Planning Commission and Board of Supervisors.

ARTICLE 1001.5 SPECIFIC DEVELOPMENT PLAN:

1. Submittal and approval of a Specific Development Plan is required prior to development of any parcel within a PAD.

2. The Specific Development Plan shall be generally consistent with the development parameters set forth in the General Development Plan. Refinements in site configuration and development parcel size are allowable, as long as any limitations applied to the overall PAD are met. A legal description of the development parcel shall be included with application for the Specific Development Plan. Application for the Specific Development Plan shall include information showing the development parcel in the context of the approved PAD and in relation to any other approved Specific Development Plans in the PAD, along with an accounting of density or intensity if limits were stipulated in the PAD approval.

3. For residential parcels, the Specific Development Plan shall be a final plat or an approved Special Use Permit, processed in the same manner and with the same requirements set forth in the County Subdivision Regulations or this Ordinance.

4. For non-residential parcels, the Specific Development Plan shall be a site plan processed in the same manner and with the same requirements set forth for a precise plan of development in Chapter 10, Section 1005.

Date of Revisions			
*1	Effective 3-31-00		

SECTION 1002. RUPD (Residential Unit Plan of Development) *21

ARTICLE 1002.1. The purpose of the Residential Unit Plan of Development is to allow large-scale residential development where variation in development standards is warranted due to topography, innovative project design, or other considerations.

ARTICLE 1002.2. The owners or authorized agents of a site may submit to the Board of Supervisors a plan to develop a Residential Unit Plan of Development. Plans, drawings and specifications shall be in sufficient detail so that reviewing bodies can fully evaluate the proposal and its effects.

ARTICLE 1002.3. The plan shall be referred to the Commission for its review, and recommendation at a public hearing. Notice and procedures for public hearings shall conform to the procedures prescribed in Chapter 3, Section 304.

ARTICLE 1002.4. The Commission having held a public hearing shall then present its recommendation and the plan to the Board of Supervisors for consideration and public hearing. Notice and procedures for public hearings shall conform to the procedures prescribed in Chapter 3, Section 304.

ARTICLE 1002.5. The recommendation of the Commission shall include the reasons for approval or disapproval of the plan, and if recommended for approval, specific evidence and facts showing the following:

1. The buildings shall be used only for single-family dwellings, two-family dwellings, multiple-family dwellings or manufactured houses, customary accessory uses, and community facilities.*1

2. The average lot area per dwelling unit or manufactured house, exclusive of the area occupied by streets, shall not be less than that required by the zoning district regulation otherwise applicable to the site.*1

3. The proposed development will not adversely affect adjacent properties or the permitted uses thereof.

ARTICLE 1002.6. The recommendation of the Commission may include reasonable conditions as deemed necessary to promote the purpose of the Ordinance including but not limited to specification or regulation of the following:

1. Yards and open spaces.

2. Fences, walls, or other types of site screening.

3. Points of vehicular and pedestrian ingress and egress.

4. Signs.

5. Landscaping and its maintenance.

6. Outdoor lighting.

7. Time limit for the start of construction.

ARTICLE 1002.7. A Residential Unit Plan of Development may be established in any rural or residential zoning district but not in any other zoning district.

ARTICLE 1002.8. Major amendments to a Residential Unit Plan of Development shall be processed in the same manner as the initial plan. Minor amendments may be administratively approved by the Department of Planning and Development.

ARTICLE 1002.9. Accessory dwelling units, with or without additional kitchen facilities, may be permitted as an accessory use, if specifically set forth in the plan. Accessory dwelling units shall be developed in accordance with the following:

1. Development of an accessory dwelling unit shall conform to all applicable building, fire and health codes.

2. Evidence shall be provided that the water supply and wastewater disposal facilities have adequate capacity for the potential maximum number of residents, based on an accessory dwelling unit on every lot.

3. The accessory dwelling unit may be attached to, or detached from, the principal dwelling unit.

4. Only one accessory dwelling unit will be permitted per lot.

5. The property owner must occupy either the principal dwelling unit or the accessory dwelling unit as their permanent residence for at least six months out of the year.

6. The accessory dwelling unit may be developed in conjunction with either an existing or a new residence.

7. The total floor area of the accessory dwelling unit shall not exceed **50%** of the total floor area of the principal dwelling unit.

8. The combined floor area of the principal and accessory dwelling units on each lot shall not exceed the maximum lot coverage approved in the plan.

9. The accessory dwelling unit shall not encroach into the approved setbacks.

10. The entrance to the accessory dwelling unit shall not be visible from any adjacent public street.

11. In addition to the parking requirements for the principal dwelling unit, **one** additional off-street parking space shall be provided for the accessory dwelling unit. The parking space must be included within a garage, carport, driveway or other designated parking area.

12. Access to the parking area for the accessory dwelling unit shall utilize the same driveway as the principal dwelling unit.

13. The accessory dwelling unit shall be designed to be architecturally compatible with the principal dwelling unit.

Date of Revisions			
*1	Revised 6-22-81	*21	Effective 5-16-98

SECTION 1003. CUPD (Commercial Unit Plan of Development)*21

ARTICLE 1003.1. The purpose of the Commercial Unit Plan of Development is to allow variations in development standards in commercial projects which require special design techniques or flexibility due to topography, innovative project design, or other considerations.

ARTICLE 1003.2. The owners or authorized agents of a site may submit to the Board of Supervisors a plan to develop a Commercial Unit Plan of Development. Plans, drawings and specifications shall be in sufficient detail so that reviewing bodies can fully evaluate the proposal and its effects.

ARTICLE 1003.3. The plan shall be referred to the Commission for its review and recommendation at a public hearing. Notice and procedures for public hearings shall conform to the procedures prescribed in Chapter 3, Section 304.

ARTICLE 1003.4. The Commission having held public hearing shall then present its recommendation and the plan to the Board of Supervisors for consideration and public hearing. Notice and procedures for public hearings shall conform to the procedures prescribed in Chapter 3, Section 304.

ARTICLE 1003.5. The recommendation of the Commission shall include the reasons for approval or disapproval of the plan, and if recommended for approval, specific evidence and facts showing the following:

1. The use(s) of the property will conform to the permitted uses as listed in the use regulations of the commercial zoning district in which it is located.

2. The project will have access to, and frontage along, a paved street of sufficient capacity for the proposed use(s).

3. The proposed development will not adversely affect adjacent properties or the permitted uses thereof.

ARTICLE 1003.6. The recommendation of the Commission may include reasonable conditions as deemed necessary to promote the purpose of this Ordinance including, but not limited to, specification or regulation of the following:

1. Yards and open spaces.

2. Fences, walls, or other types of site screening.

3. The number of parking spaces required, and the surface of parking areas; however, parking space size and driveway design must meet standard requirements.

4. Noise, vibration, odor, and other potentially dangerous or objectionable elements.

5. Points of vehicular and pedestrian ingress and egress.

6. Signs.

7. Landscaping and its maintenance.

8. Outdoor lighting.

9. Time limit for the start of construction.

ARTICLE 1003.7. A Commercial Unit Plan of Development may be established in any commercial zoning district (C-S, C-O, C-1, C-2 or C-3) but not in any other zoning district.

ARTICLE 1003.8. Major amendments to a Commercial Unit Plan of Development shall be processed in the same manner as the initial plan. Minor amendments may be administratively approved by the Department of Planning and Development.

Date of Revisions			
*21	Effective 5-16-98		

SECTION 1004. IUPD (Industrial Unit Plan of Development)*4, *21

ARTICLE 1004.1. The purpose of the Industrial Unit Plan of Development is to allow variations in development standards in industrial projects that require special design techniques or flexibility due to topography, innovative project design, or other considerations.

ARTICLE 1004.2. The owners or authorized agents of a property may submit to the Board of Supervisors a plan to develop an Industrial Unit Plan of Development. Plans, drawings and specifications shall be in sufficient detail so that reviewing bodies can fully evaluate the proposal and its effects.

ARTICLE 1004.3. The plan shall be referred to the Commission for its review and recommendation at a public hearing. Notice and procedures for public hearings shall conform to the procedures prescribed in Chapter 3, Section 304.

ARTICLE 1004.4. The Commission having held a public hearing shall then present its recommendation and the plan to the Board of Supervisors for consideration and public hearing. Notice and procedures for public hearings shall conform to the procedures prescribed in Chapter 3, Section 304.

ARTICLE 1004.5. The recommendation of the Commission shall include the reasons for approval or disapproval of the plan, and if recommended for approval, specific evidence and facts showing the following:

1. The subject project will not adversely affect adjacent properties or the public health, safety, and general welfare by causing or producing objectionable effects that would impose hazard to adjacent or other properties by reason of smoke, soot, dust, radiation, odor, noise, vibration, heat, glare, toxic fumes or other undesirable conditions.

2. The project will have access to a major street or highway, rail service or other means of transportation.

3. The use(s) of the property will conform to the permitted uses as listed in the use regulations of the industrial zoning district in which it is located.

ARTICLE 1004.6. The recommendation of the Commission may include reasonable conditions as deemed necessary to promote the purpose of the Ordinance, including but not limited to specification or regulation of the following:

1. Yards and open spaces.

2. Fences, walls, or other types of site screening.

3. Points of vehicular and pedestrian ingress and egress.

4. Signs.

5. Outdoor lighting.

6. Landscaping and its maintenance.

7. The number of parking spaces required, and the surface of parking areas; however, parking space size and driveway design must meet standard requirements.

8. Noise, vibration, odor, and other potentially dangerous or objectionable elements.

9. Time limit for the start of construction.

ARTICLE 1004.7. An Industrial Unit Plan of Development may be established in any industrial zoning district (IND-1, IND-2, or IND-3) but not in any other zoning district.

ARTICLE 1004.8. Major amendments to an Industrial Unit Plan of Development shall be processed in the same manner as the initial plan. Minor amendments may be administratively approved by the Department of Planning and Development.

Date of Revisions			
*4	Added 10-15-84	*21	Effective 5-16-98

SECTION 1005. PD (Planned Development) *1

ARTICLE 1005.1. PURPOSE: The principal purpose of the Planned Development Overlay Zoning District is to establish a basic set of conceptual parameters for the development of land and supporting infrastructure, which is to be carried out and implemented by precise plans at the time of actual development. Conceptual plans for Planned Development Overlay Development should describe the general land use concept being proposed, along with information necessary to identify the nature, scale, intent and impact of development. Precise plans for actual development refine the concept proposal to a detail level.

ARTICLE 1005.2. GENERAL PROVISIONS: *2

1. The Planned Development Overlay Zoning District is an overlay zone and may be combined with any other zoning district or combination of districts listed in Chapter 4, Section 401.

2. All portions of a lot, parcel or combinations, thereof, within the Planned Development Overlay Zoning District as designated on the zoning district maps shall be subject to the regulations and procedures set forth in this Section, except as otherwise noted herein.

ARTICLE 1005.3. USE REGULATIONS: The use regulations which apply to property in any zoning district with which the Planned Development Overlay Zoning District has been combined shall remain the same as specified in the primary zoning district, except that development in accordance with these procedures shall apply in all cases.

ARTICLE 1005.4. OTHER REGULATIONS: The height, yard, intensity of use, parking, loading and unloading, and additional regulations which apply to property in

any zone district with which the Planned Development Overlay Zoning District has been combined shall remain the same as specified in the primary zoning district unless otherwise specified herein.

ARTICLE 1005.5. PROCEDURAL REGULATIONS: The Planned Development Overlay Zoning District may be combined with any primary zone and made a part of the Zoning District maps prior to approval of plans herein specified. However, before any development of property so designated with the "PD" Overlay is authorized, concept and precise plans as further required below shall be submitted and approved by the Board of Supervisors after first referring same to the Commission for review and report in accordance with the following procedures:

1. The owners or agents of property may submit to the Board of Supervisors a conceptual plan to develop the site as a Planned Development. *2

2. The concept plan shall first be referred to the Commission for its review, report and recommendation. *3

3. After review of the Plan, the Commission shall present its report and recommendation and the concept plan to the Board of Supervisors for consideration and action. *3

4. PD Overlay Zoning may be added to any application being heard by the Planning and Zoning Commission or the Board of Supervisors without a petition or other notice. *4

5. The recommendation of the Commission shall include the reasons for approval or disapproval of the concept plan, and if recommended for approval, specific evidence and facts showing that the plan meets the requirements of the regulations for the primary zoning district, or such other requirements of a Special Use which is permitted in the primary zone district.

6. The recommendation of the Commission may include reasonable additional requirements as to the elements of the concept plan.

7. Upon approval of an overall concept plan, the owners or their agents of property may submit to the Board of Supervisors a precise plan of development consistent with that initial concept approval for an area or portion thereof so designated with the "PD" Overlay. *2

8. A precise plan shall be processed in the same manner as concept plans. The owners or agents for development of a "PD" Overlay designation may elect to submit directly to the precise plan approval process.

9. A Special Use or Unit Plan of Development as specified in Chapter 13, Section 1301 or Chapter 10, Sections 1002, 1003, and 1004 of this Ordinance, or a preliminary plat for a conventional single-family detached subdivision as specified in Article II of the Maricopa County Subdivision Regulations may be substituted for the precise plan herein required. In which case, the provisions of Chapter 13, Section 1301 or Chapter 10, Sections 1002, 1003, and 1004 of this Ordinance, or the provisions of Article II of the Maricopa County Subdivision Regulations shall be accepted as satisfying the requirements of this section.

10. Amendments shall be processed in the same manner as the plan sought to be changed.

ARTICLE 1005.6. REQUIRED PLAN SUBMITTAL:

1. Accompanying any request by an owner or agent for concept plan approval, there shall be provided a report consisting of maps, tables, and explanatory text. The Planned Development concept plan submittal shall be prepared to a scale and accuracy commensurate with its purpose and shall include the following information as a minimum:

    a. Designation of the various categories of proposed land uses including designation of areas proposed for Unit Plan of Development and other Special Uses.

    b. General arrangement of arterial streets and collector streets.

    c. General location and size of proposed school sites, parks and common areas.

    d. Methods proposed for water supply, sewage disposal, fire protection, drainage and protection from floods.

    e. Sequential phasing of uses and major improvements.

f. Major geographical features including but not limited to mountains, valleys, rivers, major washes, major highways and railroads.

g. Any additional information that may be needed in order to carry out the purpose and intent of the Planned Development Overlay Zone District.

h. An owner or agent shall also submit a report in narrative form in support of the proposed concept plans.

2. Upon approval of a concept plan, and prior to development of the site, the owners or agents of property within "PD" Overlay designation shall submit a precise plan of development consistent with the concept plan approval and which includes all of the reports, information and exhibits required of the concept plan, but in a final precise form.

Date of Revisions			
*1	Added 7-1-85	*3	Revised 7-18-90
*2	Revised 6-30-86	*4	Revised 7-18-90

SECTION 1006. SC (Senior Citizen)*1

ARTICLE 1006.1. PURPOSE: The SC (Senior Citizen Overlay) Zoning District is intended to provide for planned residential development, designed specifically for residency by persons of advanced age.

ARTICLE 1006.2. USE REGULATIONS:

1. The SC (Senior Citizen Overlay) Zoning District is an overlay zone and shall be combined with any rural or residential zoning district and not with any other zoning district, (e.g., Rural-190 (SC), R1-35 (SC), R-5 (SC), etc.).

2. The regulations which apply to property in any zone with which the SC Zoning District is combined shall remain the same, except as to the matters specified in this Section. This Section shall apply in lieu of or in addition to and shall supersede the corresponding regulations of such zone with which the SC Zoning District is combined.

3. Temporary use for underage occupancy. Continued occupancy in this district in the dwelling unit by an underage spouse, because of the death or long term medical relocation of the spouse meeting the

age requirement, shall be exempt from this provision. This exemption shall continue only so long as the remaining spouse maintains a sole occupant status. Upon change from a sole occupant status, the age requirements of this district for occupancy shall be met. Otherwise, a Temporary Use Permit for underage occupancy shall be required for occupancy of any underage person beyond the **90 days** permitted in Article 1006.6.1. *3

ARTICLE 1006.3. HEIGHT REGULATIONS: No building shall be constructed that exceeds **two stories** in height, unless it contains elevators for the use of the occupants.

ARTICLE 1006.4. INTENSITY OF USE REGULATIONS: The Senior Citizen Overlay Zoning District shall only be established on parcels of **five** or **more contiguous acres** which may include existing or proposed subdivided lots and public or private rights-of-way and easements.

ARTICLE 1006.5. PARKING REGULATIONS: The required parking spaces as delineated in the underlying zoning district shall be located within **200 feet** of the unit it is to serve.

ARTICLE 1006.6. ADDITIONAL REGULATIONS: **3

1. Each dwelling unit, if occupied, shall be occupied by at least **one person** not less than **55 years of age** and no person **18 years of age** or under shall reside in any dwelling unit for a period of time exceeding **90 days**. *2, *3

2. The following criteria shall be met and maintained for each planned residential development: *3, *4

   a. At least **80%** of the dwelling units shall be occupied by at least **one person 55 years of age or older** per unit.

   b. Policies and procedures which demonstrate an intent to provide housing for persons **55 years of age or olde**r shall be published and adhered to.

   c. It is the responsibility of the residents and/or owners of properties to provide evidence that the above criteria are met and will be maintained.

(NOTE: The above criteria are based on the requirements contained in Section 100.304 of the Rules and Regulations for implementation of the Federal Fair Housing Amendment Act of 1988).

ARTICLE 1006.7. PUBLIC HEARING NOTICE AND PROCEDURE: The use and application of this Overlay Zoning District shall be consistent with all other zoning districts in this Ordinance. Notice and procedure for public hearing shall conform to the procedures prescribed in Chapter 3, Section 304. hereof.

Date of Revisions			
*1	Added 5-30-79	**3	Revised 2-20-94
*2	Revised/Effective 8-10-89	*4	Revised 6-5-96
*3	Added 2-20-94		

SECTION 1007. WESTSIDE MILITARY AIRBASE*1

Note: The Airbase Overlay Zoning District is defined by the adopted noise contours with the **75 Ldn** noise contours being the outer limits of the Overlay Zoning District, as shown on the zoning map, which is attached hereto and made a part hereof.

ARTICLE 1007.1. PURPOSE: The principal purposes of the Military Airbase Overlay Zoning District are:

1. To promote the public health and safety in the vicinity of military airports by minimizing exposure to crash hazards and high noise levels.

2. To create orderly, efficient and functional development patterns which are compatible with the continued operation of the military airbase.

3. To reduce the effect of aircraft generated noise intrusion.

4. To encourage safe and efficient traffic movement of goods and people surrounding the military airbase.

ARTICLE 1007.2. GENERAL PROVISIONS:

1. Persons with property divided by the Airbase Overlay Zoning District Boundary or Overlay Zones are required to comply with the district standards only for that segment of the property within the boundary.

2. When standards and requirements differ between the Airbase Overlay Zoning District and the existing zoning district classification, the more restrictive regulation shall apply.

3. All new uses of land, buildings, subdivisions and rezonings shall be required to conform with the Airbase Overlay Zoning District Regulations. Existing uses of land and buildings shall be governed as provided by Chapter 13, Section 1305., Nonconforming Uses, of the Maricopa County Zoning Ordinance.

4. The Board of Adjustment, according to Chapter 3, Section 303. of the Maricopa County Zoning Ordinance, shall have the power to allow variance from the standards and regulations contained herein. In granting any variance it must be shown where, by reason of any peculiar situation, surrounding or conditions of a specific property, or by reason of particular narrowness, shallowness or shape of a specific lot of record, or by reason of unusual topographical conditions, the strict application of any regulation of this Ordinance would result in practical difficulties or unnecessary hardship upon the owner of such property, provide such relief can be granted without substantially impairing the purpose of this Ordinance.

5. The Airbase Overlay Zoning District has been divided into **four overlay zones** according to the noise contours. These are as follows:

   a. ***Zone 1:*** That area within the **80 and above Ldn** noise contour, but not within any other Airport District.

   b. ***Zone 2:*** That area within the **75 to 80 Ldn** noise contour, but not within any other Airport District.

   c. ***Zone 3:*** That area within the **70 to 75 Ldn** noise contour, but not within any other Airport District.

   d. ***Zone 4:*** That area within the **65 to 70 Ldn** noise contour, but not within any other Airport District.

6. The Overlay Zones do not identify those uses that are permitted or prohibited. The underlying or existing zoning district identifies allowable uses. The Overlay Zones "overlay" the existing zoning, and set forth additional regulations that are necessary to promote the public health and safety.

ARTICLE 1007.3. STANDARDS: The following standards apply in the Airbase Overlay Zones:

1. ***Subdivisions:*** Any new subdivision shall include:

   a. Public disclosure of noise levels through the provision of deed restrictions that shall run with the land.

   b. A note stating high noise exposure shall be indicated on any subdivision plat.

   c. The delineation of adopted noise contours on all subdivision plats.

2. ***Comprehensive plan:*** Any new land use designations shall be a land use category that is compatible with the noise level as determined by the Westside Joint Land Use Study adopted by MAG on **May 15, 1988**.

3. ***Rezonings:*** Any change of zoning (rezoning) shall be a zoning district compatible with the noise level determined by the Westside Joint Land Use Study adopted by MAG on **May 25, 1988**.

4. ***Building permits:*** Any new building shall have occupied areas noise attenuated to achieve:

   a. **40 db** reduction in the **80 and above Ldn**.

   b. **35 db** reduction in the **75 and above Ldn**.

   c. **30 db** reduction in the **70 and above Ldn**.

   d. **25 db** reduction in the **65 and above Ldn**.

5. ***ZONE 1*** (80 Ldn and above):

   a. ***Prohibited:***

      1. New residential subdivisions.

      2. All uses requiring occupied building space except for agricultural activity.[*1]

      3. Commercial Uses. [*1]

4. Industrial uses except when the number of employees are limited to a maximum of **one employee for each 3,500 square feet** of net lot area.[*1]

5. Residential density on contiguous land that is under one ownership on the effective date of this Ordinance and exceeds **80 acres** in area is limited to **one dwelling unit** for any acreage in excess of the minimum required acreage.

6. Residential density on contiguous land under common ownership existing as of the effective date of this Ordinance, which is **less** than **80 acres**, is limited to **one dwelling unit** per the total or combined ownership.

b. ***Requirements:***

1. All occupied building areas must be sound attenuated to achieve a **40 db** noise level reduction.

6. ***ZONE 2*** (**75** to **80** Ldn):

a. ***Prohibited:***

1. New residential subdivision.

2. All uses requiring occupied building space except for agricultural uses and industrial uses. [*1]

3. Noise sensitive commercial uses. [*1]

4. Other commercial uses unless approved as part of a Plan of Development. [*1]

5. Residential density on contiguous land that is under one ownership on the effective date of this Ordinance and exceeds **80 acres** in area is limited to **one dwelling unit** per each **80 acres** plus **one dwelling unit** for any acreage in excess of the minimum required acreage.

6. Residential density on contiguous land under common ownership existing as of the effective date of this Ordinance, which is **less than 80 acres**, is limited to **one dwelling unit** per the total or combined ownership.

b. ***Requirements:***

1. All occupied building areas shall be noise attenuated to achieve a **35 db** noise level reduction.[*1]

7. ***ZONE 3*** (70 to 75 Ldn): New Residential development shall be strongly discouraged within the **70 Ldn** and greater noise contour. If it is determined that there is need for residential, low density residential subdivisions not exceeding **two and one-half dwelling units** per acre within the **70-75 Ldn** could be allowed only if sound attenuated to achieve a **30 db** noise reduction in the construction of all buildings.

a. ***Prohibited:***

1. New residential subdivisions at a density greater than exceeding **two and one-half dwelling units** per acre. Community facilities such as auditoriums, concert halls, outdoor amphitheaters and music halls, schools and medical facilities.

b. ***Requirements:***

1. All occupied building areas shall be noise attenuated to achieve a **30 db** noise level reduction.[*1]

8. ***ZONE 4*** (65 to 70 Ldn): New residential development shall be strongly discouraged within the **65 Ldn** and greater noise contour. If it is determined there is a need for residential, low-density residential subdivisions not exceeding **three and one half dwelling units** per acre within the **65-70 Ldn** could be allowed only if sound attenuated to achieve a **25 db** noise reduction in the construction of all dwellings.

a. ***Prohibited:***

1. New residential subdivisions at a density greater than **three and one half dwelling units** per acre. In addition, schools and hospitals are also prohibited.

b. ***Requirements:***

1. All occupied buildings shall be noise attenuated to achieve a **25 db** noise level reduction.[*1]

[*1]Existing zoning, subdivisions and structures are exempt from this provision.

Date of Revisions			
*1	Added 1-9-92		

SECTION 1008 WICKENBURG SCENIC CORRIDOR

ARTICLE 1008.1. PURPOSE: The principal purposes of the Wickenburg Scenic Corridor Overlay Zoning District are:

1. To maintain the scenic beauty that now exists along the Wickenburg Highway.

2. To encourage orderly and sensitive development within the scenic corridor.

3. To encourage safe and efficient traffic flow along the Wickenburg Highway.

4. To encourage and improve the economic, social and physical living environment for the residents within the Scenic Corridor.

ARTICLE 1008.2. GENERAL PROVISIONS:

1. The Wickenburg Highway Scenic Corridor Overlay Zoning District encompasses lands within **two miles** of the edge of the right-of-way of both sides of the Wickenburg Highway (U.S. Highway 60-89) extending from Bell Road (Surprise) to the Town of Wickenburg corporate limits.

2. Persons with property divided by the Scenic Corridor boundary or intensity levels (Class 1-4) are required to comply with the district

standards only for that segment of the property within the boundary according to Chapter 4, Section 405. of the Maricopa County Zoning Ordinance.

3. When standards and requirements differ between the Scenic Corridor Overlay Zoning District and the existing primary zoning district classification, the more restrictive regulation shall apply.

4. All new development shall be required to conform with the Scenic Corridor Overlay Zoning District regulations. Existing uses shall be governed as provided by Chapter 13, Section 1305., Non-Conforming Uses, of the Maricopa County Zoning Ordinance.

5. The Wickenburg Scenic Overlay Zoning District is divided into **four** intensity levels according to location and physical features of the Scenic Corridor. These are as follows:

   a. **Class 1: One-quarter miles to two miles** from Wickenburg Highway Right-of-way.

   b. **Class 2: 300 feet to one-quarter mile** from Wickenburg Highway Right-of-way.

   c. **Class 3: Zero to 300 feet** from Wickenburg Highway Right-of-way; from Rocking Hills Drive alignment (Morristown) north to the Town of Wickenburg.

   d. **Class 4: Zero to 300** feet from Wickenburg Highway Right-of-way; from Rocking Hills Drive alignment south to Bell Road (Surprise).

ARTICLE 1008.3. USE REGULATIONS:

1. Uses allowed within the Scenic Corridor Overlay District shall remain the same as specified in the primary district with which the Overlay District has been combined. However, because of the amount and proliferation of existing commercial zoning, additional commercial zoning (C-O, C-S, C-1, C-2, C-3) will be discouraged. To accommodate needed commercial uses, transfer of commercial zoning within the scenic corridor is allowed. Commercial Zoning may be changed to another commercial classification of equal or less intensity (where C-O is the least intense and C-3 is the most intense). To encourage commercial development in the appropriate areas, *bonus ratios* will be allowed in certain

circumstances. Ratios vary according to class designation as follows:

TRANSFER OF COMMERCIAL ZONING BONUS RATIO*

1.	**Class 3 to Class 1 or 2** (Arterial Intersections)	**2**
2.	**Class 3 to Class 4** (Activity Centers)	**2**
3.	**Class 4 to Class 1 or 2** (Arterial Intersections)	**2**
4.	**Class 4** (Non-activity Center) **to Class 4** (Activity Centers)	**1.5**

Note: ***Ten acres** of C-2 Zoning in Class 3 could be used to designate **20 acres** of C-2 Zoning (or C-1, C-O, C-S) in Classes 1, 2 or 4 at arterial intersection or activity centers.

ARTICLE 1008.4. STANDARDS: The following standards apply in each intensity level Class category:

1. **CLASS 1:**

   a. ***Land Use Plan:*** Rezonings shall be consistent with the Scenic Corridor Plan (Goals and Policies and Land Use Plan).

   b. ***PD Overlay:*** Rezonings shall comply with the procedural requirements of Chapter 10, Section 1005. (Planned Development (PD) Overlay Zoning District). When considering PD Overlay Zoning, the Planning Commission may include reasonable requirements deemed necessary to promote the purpose of the Scenic Corridor.

2. **CLASS 2:**

   a. ***Land Use Plan:*** Rezonings shall be consistent with the Scenic Corridor Plan (Goals and Policies and Land Use Plan).

   b. ***PD Overlay:*** Rezonings shall comply with the procedural requirements of Chapter 10, Section 1005. (Planned Development (PD) Overlay Zoning District). When

considering PD Overlay Zoning, the Planning Commission may include reasonable requirements deemed necessary to promote the purpose of the Scenic Corridor.

c. ***Building Height:*** Building heights for new development shall be limited to **33 feet** above grade.

3. **CLASS 3:**

a. ***Land Use Plan:*** Rezoning shall be consistent with the Scenic Corridor Plan (Goals and Policies and Land Use Plan).

b. ***PD Overlay:*** Rezonings shall comply with the procedural requirements of Chapter 10, Section 1005. (Planned Development (PD) Overlay Zoning District). When considering PD Overlay Zoning, the Planning Commission may include reasonable requirements deemed necessary to promote the purpose of the Scenic Corridor.

c. ***Building Height:*** Building heights for new development shall be limited to **33 feet** above road grade.

d. ***Screening:*** All non-residential uses shall comply with the following provisions regarding screening:

1. Outdoor storage of all items except display goods shall be located to the rear of the principal building, and screened with a solid fence.

2. Loading areas shall be screened and located to the rear of structures.

3. All parking areas shall be screened from the Wickenburg Highway.

4. Natural drought tolerant landscaping shall be placed in front of any wall facing the Wickenburg Highway.

e. ***Signs:*** The sign regulations are as provided in Chapter 14, Section 1406. hereof.

f. ***Architecture:*** All non-residential uses shall meet the following architectural standards:

1. A minimum of **80%** of surface material, excluding doors and windows, shall be made to appear as if natural materials were used in construction. The use of reflective glass shall be prohibited.

2. All accessory structures and improvements must be similar in style and appearance to the architecture of the principal building.

g. ***Access:*** The number of access points to the Wickenburg Highway shall be minimized. A minimum separation of **one half mile** between access points on either side of the highway is required unless otherwise approved by the Board of Supervisors after finding that no alternative is available. Common access points will be encouraged for all new development. All intersections of local roads shall be at **90 degrees** (right angle) with the Wickenburg Highway.

h. ***Slope:*** Development on steep slopes within Class 3 shall be regulated by the following provisions:

1. Maricopa County Zoning Ordinance, Chapter 12, Section 1201., Hillside Development Standards, shall apply to all development of slopes greater than **15%**.

2. The *existing natural slope* of property for all new development shall be maintained according to the following schedule:

SLOPE GRADIENT	PERCENTAGE OF PROPERTY TO KEEP EXISTING NATURAL SLOPE
0 to 5 %	**25%**
5 to 15%	**60%**
15 to 25%	**80%**
25 % +	**90%**

3. No cuts, fills or grading for development shall be made prior to final approval of a Precise Plan of Development by Maricopa County.

i. ***Landscape Setback:*** All structures, parking areas, and other improvements except driveways and free-standing

signs, shall be setback a minimum of **25 feet** from the ultimate right-of-way line of the Wickenburg Highway (U.S. 60-89). For lots less than **250 feet** in depth, the minimum setback shall be **10%** of lot depth except that the minimum setback shall not be less than that required by the underlying zoning district. Existing natural vegetation within the required landscape setback shall be preserved. Additional natural desert vegetation shall be provided if there is insufficient existing vegetation.

j. ***Noise Abatement:*** Residential uses adjacent to the Wickenburg Highway or the Santa Fe Railroad shall include noise abatement improvements when warranted.

4. **CLASS 4:**

a. ***Land Use Plan:*** Rezonings shall be consistent with the Scenic Corridor Plan (Goals and Policies and Land Use Plan).

b. ***PD Overlay:*** Rezonings shall comply with the procedural requirements of Chapter 10, Section 1005. (Planned Development (PD) Overlay Zoning District). When considering the PD Overlay Zoning, the Planning Commission may include reasonable requirements as deemed necessary to promote the purpose of the Scenic Corridor.

c. ***Building Height:*** Building Heights for new development shall be limited to **33 feet** above road grade.

d. ***Screening:*** All non-residential uses shall comply with the following provisions in regard to screening:

1. Outdoor storage of all items except display goods shall be located to the rear of the principal building, and screened with a solid fence.

2. Loading areas shall be screened and located to the rear of structures.

3. All parking areas are to be screened from the Wickenburg Highway.

4. Natural drought tolerant landscaping shall be placed in front of any wall facing the Wickenburg Highway.

e. ***Signs:*** The sign regulations are as provided in Chapter 14, Section 1406. hereof.

f. ***Architecture:*** All non-residential uses shall meet the following architectural standards:

1. A minimum of **80%** of surface material, excluding doors and windows shall be made to appear as if natural materials were used in construction. The use of reflective glass shall be prohibited.

2. All accessory structures and improvements must be similar in style and appearance to the architecture of the principal building.

g. ***Access:*** Direct access to the Wickenburg highway from adjacent property shall be prohibited, except existing development will be allowed temporary access until an alternative method of access is in place. The following access controls shall be implemented as funding becomes available and/or development is approved.

1. Access points shall be limited to **one half mile** along the Wickenburg Highway.

2. All intersections of local roads shall be at ninety degrees (right angles) with the Wickenburg Highway.

3. An alternate internal circulation plan which uses existing access points at railroad crossings, shall be developed for that area *east* of the Wickenburg Highway.

4. A frontage road and/or an alternate internal circulation plan shall be developed for those areas *west* of the Wickenburg Highway which are undeveloped and have parcels of sufficient size to accommodate an internal traffic design.

5. Where property adjacent to the Wickenburg Highway (to the west) is developed or there are small parcels for which an alternate method of access cannot be developed, a frontage road shall be constructed on or

within Arizona Department of Transportation right-of-way, where possible and necessary.

6. Improvements, and right-of-way dedications when necessary, for access including frontage roads, signalization and intersections shall be the responsibility of new development.

h. ***Landscape Setback:*** All structures, parking areas, other improvement except driveways and free-standing signs, shall be setback a minimum of **25 feet** from the ultimate right-of-way line of the Wickenburg Highway (U.S. 60-89). For lots less than **250 feet** in depth except that the minimum setback shall not be less than that required by the underlying zoning district. Existing natural vegetation within the required landscape setback shall be preserved. Additional natural desert vegetation shall be provided if there is insufficient existing vegetation.

i. ***Noise Abatement:*** Residential uses adjacent to the Wickenburg Highway or the Santa Fe Railroad shall include noise abatement improvements when warranted.

j. If additional right-of-way acquisition is needed, the Railroad will be considered as a viable option.

Date of Revisions			
*1	Added 8-1-91		

SECTION 1009. HWY 74 SCENIC CORRIDOR*1

ARTICLE 1009.1. PURPOSE: The Highway 74 Scenic Corridor Overlay Zoning District establishes criteria that encourage preservation of the natural and cultural landscape and its scenic quality along Highway 74. The specific purpose of this Overlay Zoning District is to:

1. Protect scenic land and associated views and viewsheds of natural, cultural and visual resources along Highway 74, while also recognizing the legitimate expectations of property owners and the County's overall land use and economic needs and goals.

2. Preserve Upper Sonoran Desert and hillside landforms to the greatest extent feasible for the benefit of residents, visitors and as an

economic resource to Maricopa County in tourism and recreation activities.

3. Protect designated recreational areas, such as regional parks, by minimizing any potentially negative impacts from adjacent development.

4. Encourage innovative and sensitive planning, high quality design and construction techniques for development along Highway 74.

5. Encourage safe and efficient traffic flow along Highway 74.

6. Enhance the economic, social and physical living environment for the residents.

ARTICLE 1009.2. GENERAL PROVISIONS:

1. The Highway 74 Scenic Overlay Zoning District is comprised of all land **500 feet** from each side of the centerline of the Highway 74 right-of-way, from the east boundary line of Section 30, Township 6 North, Range 1 East, Gila and Salt River Base Meridian to the west boundary line of Section 17 of Township 6 North, Range 3 West, Gila and Salt River Base and Meridian.

2. Property divided by the Overlay Zone boundary is regulated by the district standards only for that segment of the property within the zone.

ARTICLE 1009.3. PERMITTED USES: Uses permitted are those allowed by the primary zoning district with which the Scenic Corridor Overlay Zoning District is combined unless prohibited herein.

ARTICLE 1009.4. STANDARDS: In addition to the standards of the underlying zone district, the following standards shall apply:

1. ***Height Regulations:***

   a. For residential uses, **20 feet** within **250 feet** of the centerline of Highway 74 and **30 feet** from **250-500 feet** of the centerline of Highway 74.

   b. For nonresidential uses, **20 feet** within **250 feet** of the centerline of Highway 74 and **33 feet** from **250-500 feet** of the centerline of Highway 74.

2. ***Slopes:*** In addition to the standards in Chapter 12, Section 1201. (Hillside Development Standards), the following standards shall apply:

SLOPE GRADIENT	PERCENTAGE OF PROPERTY TO REMAIN NATURAL OR TO BE REVEGETATED
0 to 5 %	**25%**
5 to 15%	**45%**
15 % +	**65%**

a. In locating required natural areas, attention shall be given to preservation of washes and significant natural features on the property and should be incorporated into the drainage plan.

b. No cuts, fills or grading for development shall be made prior to final approval of a Precise Plan with the exception of approved access roads.

3. ***Setback from Highway 74:*** Within the Corridor area, all structures, fences, parking areas and other improvements except driveways and signs, shall be setback an average of **75 feet** and a minimum of **50 feet** from the property line to allow an undulating rather than a linear setback and to accommodate the unique terrain and natural features of the site. Existing vegetation within the required setback shall be preserved with the exception of the driveway. Additional vegetation, if provided, shall be native vegetation indigenous to the Upper Sonoran Desert.

4. ***Screening:*** All uses shall comply with the following screening standards:

a. All service and outside storage areas shall be screened from public rights-of-way not less than the height of equipment to be screened. Screening shall consist of a solid decorative wall **six feet** in height to conceal trash containers, loading docks, transformers and other mechanical and/or electrical equipment.

b. All mechanical rooftop equipment must be screened to the height of the tallest equipment and/or integrated with the building design.

5. ***Access:*** The number of access points to Highway 74 from any one development within the corridor zone shall be limited to one driveway except as follows:

   a. A traffic impact study demonstrates the need for additional driveways due to traffic conditions, and

   b. The governmental jurisdiction concurs with that study and then allows additional driveways as required.

6. ***Signs:*** The sign regulations are as provided in Chapter 14, Section 1406.2. hereof.

7. ***Parking:*** **5%** of all surface parking area for non-residential development shall be landscaped with native vegetation indigenous to the Upper Sonoran Desert. Perimeter landscaping shall not be included in the **5 %** and shall not be counted towards the requirements of Chapter 11, Section 1102.

8. ***Archaeological Survey:*** Prior to the issuance of Zoning Clearance, an archaeological survey shall be required for all development with exceptions granted by the State Historic Preservation Officer.

9. ***Lighting:*** Low level lighting is encouraged. All on-site lighting shall be shielded so as to not illuminate any area outside of the site. The source of light shall not exceed **18 feet** in height. All outdoor lighting shall conform to Chapter 11, Section 1112. of the Maricopa County Zoning Ordinance.

10. ***Architectural Design:*** All developments shall select materials and colors that are muted and compatible with the desert environment and help reduce visual contrast, heat gain and glare. Design features are to be included on all sides of a building.

11. ***Plan Approval:*** Prior to the issuance of Zoning Clearance, a Plan of Development shall be submitted to and approved by the Board of Supervisors for all uses with one noted exception. This exception shall be for a individual single-family residence and its accessories, on slopes less than **15 %.**

12. ***Density Bonus:*** To encourage areas of no development within the Corridor, a transfer of density for residential development equal to twice the base zoning will be allowed in property outside and adjacent to the non-developed portion of the property (when the

development proposes no development within the Corridor). To receive the density bonus, a non-development easement agreement must be prepared and submitted as part of an accompanying rezoning request for increased density. Upon approval of the increased density request, the easement shall be recorded prior to zoning clearance.

13. ***Environmental Evaluation:*** For those projects not guided by the National Environmental Policy Act of 1969, a request for a habitat and special status species evaluation shall be made by the developer to the Arizona Game and Fish Department with information forwarded within **45 days** to the appropriate County agency. Mitigation and protection measures based on the evaluation shall be reviewed by staff and incorporated into the recommendation to the Commission with final action by the Board of Supervisors.

14. ***Utilities:*** Utility lines shall be located underground.

Date of Revisions			
*1	6-6-94		

MARICOPA COUNTY ZONING ORDINANCE

Chapter 11 – General Regulations

SECTION 1101. APPLYING GENERAL PROVISIONS

The regulations set forth in this Chapter qualify or supplement, as the case may be, the zoning district regulations appearing elsewhere in this Ordinance.

SECTION 1102. PARKING REGULATIONS[*20, *31]

ARTICLE 1102.1. MINIMUM REQUIREMENTS: There shall be provided parking spaces for each use on a lot based on the following chart: [*8]

USE	MINIMUM PARKING SPACES
1102.1.1. - *Residential Uses:*	
1. Mobile Home and Travel Trailer/RV Park	**One** per approved space + spaces to meet the needs of any commercial, office or public assembly
2. Single-family (includes mobile homes on owned lots)	**Two** per dwelling unit
3. Multiple-family	**Two** per dwelling unit [1 & 2]
4. Fraternities and Sororities	**One** and one-half per each sleeping room [2]
1102.1.2. - *Public Assembly Uses:* [2]	
1. Schools, public, private and charter[*31]	**One** per 400 square feet of floor area
2. All other public assembly uses	**One** per 200 square feet of floor area
1102.1.3. - *Hotels, Motels, Guest Ranches and Resort Hotels:*	**One** per sleeping room + spaces to meet the needs of any commercial, office or public assembly [2]
1102.1.4. - *Office and Commercial Uses:*	**One** per 250 square feet of floor area + **one** per 5,000 square feet of outside display area; and + **one** per 100 square feet of outdoor seating area; and + **four** per golf course green [2]
1102.1.5. - *Industrial, Wholesale and*	**One** per 600 square feet of floor area [2]

Manufacturing Uses:

1102.1.6. - *Warehouse Uses:* **On**e per 900 square feet of floor area [2]

[1] **20%** of parking spaces shall be reserved for guest parking spaces.

[2] **5%** of parking spaces shall be handicapped parking spaces.

ARTICLE 1102.2. **FRACTIONAL MEASUREMENTS: One** additional parking space shall be required if the number of required parking spaces results in a fractional number.

ARTICLE 1102.3. **LOCATION:** *18

1102.3.1. Parking spaces shall be located on the same lot as the use they are intended to serve, or within **600 feet** of the use to be served provided assurances are supplied to the Zoning Administrator that the off-site parking will be continuously available during normal business hours of the use to be served.

1102.3.2. Parking spaces shall be located such that each space has access to the use to be served without crossing a public or private street, or a railroad right-of-way.

ARTICLE 1102.4. **MIXED USES:** The required parking spaces shall be the sum of the required parking spaces for the individual uses.

ARTICLE 1102.5. **JOINT USE:** This Ordinance allows the joint use of parking spaces for **two or more** buildings or uses if the total spaces equals the spaces required for the individual buildings or uses during their normal hours of operation.

ARTICLE 1102.6 **HANDICAPPED PARKING:**

1102.6.1. Such spaces shall be located on the shortest accessible route to building entrances.

1102.6.2. Such spaces shall show the international handicapped symbol and say "Reserved". Such signs shall be exempted from the Sign Regulations of this Ordinance.

1102.6.3. Such space shall have a handicapped symbol painted on the ground to the rear of the parking space.

ARTICLE 1102.7. **DESIGN STANDARDS:** *9, *12 The following parking space/lot design standards shall be complied with:

1102.7.1. For other than **one** single-family dwelling unit or **one** mobile home on a lot of record, any parking area shall be paved.

1102.7.2. For **one** single-family dwelling unit or **one** mobile home on a lot of record, any parking area must be paved or in the alternative surfaced with ABC material.

1102.7.3. Parking spaces, aisles, and driveways shall be so arranged as to require ingress and egress from the lot to a street by forward motion of the vehicle. [3]

1102.7.4. Parking spaces shall be designed so that vehicles exiting there from will not be required to back onto or across any sidewalk or street. [3]

1102.7.5. Adjacent to any rural or residential zone parking areas shall be screened from view, except when separated by a public street. [3]

1102.7.6. Any lights used to illuminate parking spaces shall be so arranged and screened as to reflect the light away from adjoining lots in rural or residential districts and from streets or from any residential use in commercial zoned districts. Such lights shall be in accordance with any adopted County Outdoor Lighting Ordinance and shall have a maximum height of **18 feet**.

1102.7.7. Parking areas shall be visually screened from abutting road right-of-way (excluding alleys) by a building or structure or a strip of landscaping at least **five feet** in width.*[3]

1102.7.8. Either a wall or a minimum **six inches** high curb or bumper guard shall be installed to ensure that no part of a parked vehicle shall extend past any property line.* [3]

1102.7.9. Parking spaces shall be designated by striping. [3]

1102.7.10. The design of roads, pedestrian walks, and open spaces within parking areas are subject to approval by the Zoning Administrator and shall be arranged so that pedestrians are not unnecessarily exposed to vehicular traffic.[3]

1102.7.11. Paved and comfortably graded pedestrian walks shall be provided along lines of the most intense pedestrian use, particularly from building entrances to streets, parking areas, and adjacent buildings. [3]

1102.7.12. Only **one** parking area entrance and **one** parking area exit; or **one** combined parking area entrance and exit is allowed for a lot or parcel along any **one** street unless otherwise approved by the County Engineer.

*3 Requirement applies except for single-family dwellings, two-family dwellings, and individual mobile homes on a lot of record.

ARTICLE 1102.8. **PARKING AREA DIMENSIONS*34:** Dimensions of parking spaces and access areas shall be in accordance with the following:

SEE PARKING LAYOUT GRAPHIC

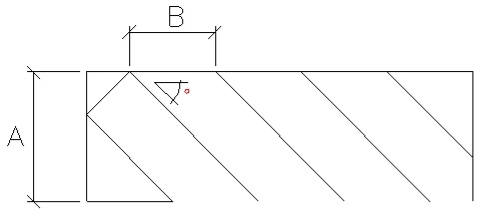

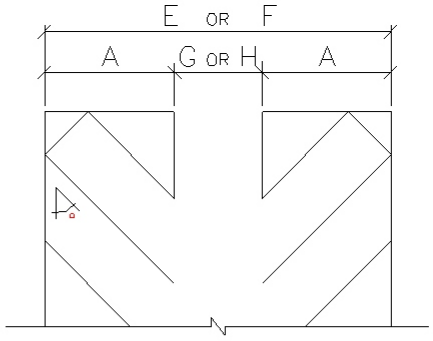

ANGULAR PARKING PATTERNS

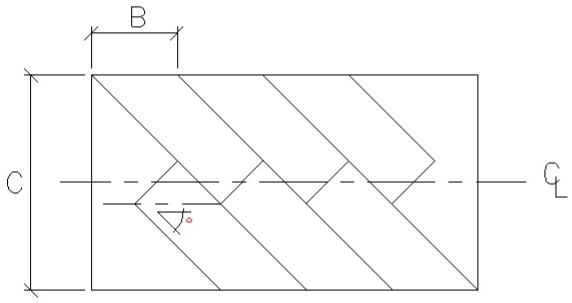

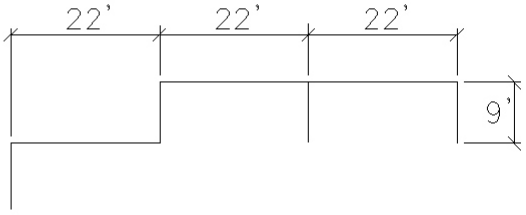

PARALLEL PARKING

ANGLE PARKING

∠°	A	B	C	D	E ONE WAY AISLE	F TWO WAY AISLE	G ONE WAY AISLE	H TWO WAY AISLE
30	16.8	18.0	25.8	12.9	45.6	51.6	12.0	18.0
45	19.1	12.7	31.8	15.9	51.2	58.2	13.0	20.0
60	20.1	10.4	35.7	17.8	58.2	62.2	18.0	22.0

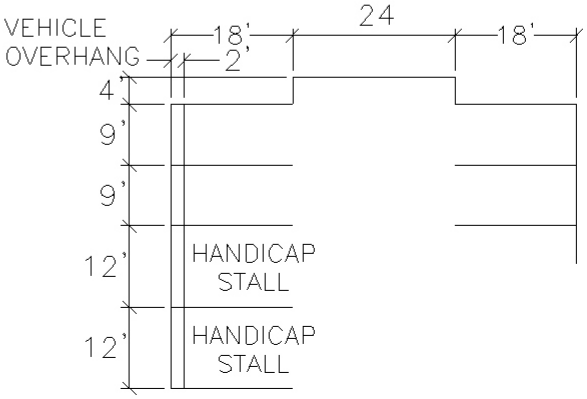

90 DEGREE PARKING

ARTICLE 1102.9. ADDITIONAL PARKING REGULATIONS: In addition to the above parking requirements, the following requirements must be met:

1102.9.1. No Zoning Clearance shall be issued unless the required parking as indicated in this section is provided.

1102.9.2. Whenever a Zoning Clearance has been granted, the subsequent use of the property is conditioned upon the provision of the parking spaces contained in the approved plans.

1102.9.3. No addition or enlargement of an existing building or use shall be permitted unless the parking requirements of this Ordinance are met for the entire building or use.

1102.9.4. The parking or storage of a non-accessory vehicle except for normal deliveries having a gross vehicle weight greater than **10,000 lbs**. on any lot in any rural or residential zoning district is prohibited. *24

1102.9.5. Not more than **one** unregistered or inoperable motor vehicle shall be stored on any lot or parcel of land within any rural or residential zoning district, and such unregistered or inoperable vehicle shall be stored such that it cannot be seen from any public or private street right-of-way.

1102.9.6. The use of any required parking area for motor vehicle repair work, or display, or sales of any kind is prohibited, and any required parking area shall be available for customer, patron, and employee parking at all time during normal business hours.

1102.9.7. Parking structures, which have no portion above grade, shall not be included in the calculation of lot coverage for the site.

1102.9.8. Off-street parking provided for employees of office or commercial or industrial uses requiring **50** or more spaces shall designate at least **10%** of the total number of parking spaces for use by car and/or van pools, and be clearly signed, reserved, and managed to that end.

1102.9.9. Off-street parking provided for employees of office or commercial or industrial uses requiring **100** or more spaces shall designate at least **15%** of the total number of parking spaces for use by car and/or van pools and be clearly signed, reserved, and managed to that end; and shall design and construct convenient facilities in order to secure bicycles; and shall design and provide for needed transit facilities, such as, but not limited to, park and ride parking spaces and

transit stops and shelters as determined by the Regional Public Transit Authority; and shall provide to the Maricopa County Trip Reduction Office, plans and programs to reduce total vehicle trips in conformance with the State of Arizona and Maricopa County goals, policies, regulations, and plans.

1102.9.10. For those large scale developments that include one or more regulation golf courses and which propose to use golf carts to meet some of the transportation needs, **one** of the **two** required parking spaces for single-family and multiple-family dwellings may be a golf cart parking space. Such golf cart parking space shall be a maximum size of **six feet** in width and **12** feet in depth and shall not be used for any purpose other than golf cart parking. Up to **10%** of the required parking spaces at regulation golf courses in the above large scale developments may be golf cart parking spaces.

Date of Revisions			
*1	Revised 7-17-72	*18	Revised 8-5-85, Effective 1-1-86
*2	Added 12-30-74	*20	Revised 4-3-91
*3	Revised 8-11-75	*24	Revised 5-6-94
*8	Revised 10-1-79	*31	Effective 11-19-99
*9	Revised 5-11-81	*34	Correction 2-25-00
*12	Revised 8-15-83		

SECTION 1103. LOADING AND UNLOADING REGULATIONS

ARTICLE 1103.1 **COMMERCIAL BUILDINGS:** For all commercial buildings hereafter erected, or for any building converted to such use or occupancy, there shall be provided **one** loading and unloading space for each **25,000 square feet** of floor area, or fraction thereof, devoted to such use in the building.

ARTICLE 1103.2. **WHOLESALE, MANUFACTURING AND INDUSTRIAL BUILDINGS:** For all wholesale, manufacturing and industrial buildings hereafter erected, or for any building converted to such use or occupancy, there shall be provided **one** loading and unloading space for each **10,000 square feet** of floor area, or fraction thereof, devoted to such use in the building.

ARTICLE 1103.3. **LOCATION:** The required loading and unloading spaces shall in all cases be on the same lot as the use they are intended to serve. In no case shall required loading and unloading spaces be part of the area used to satisfy the parking requirement.

ARTICLE 1103.4. **COLLECTIVE ACTION:** This Ordinance shall not be construed to prevent the joint use of loading and unloading spaces for **two** or more

buildings or used if the total of such spaces when used together is not less than the sum of the spaces required for the various individual buildings or uses computed separately.

ARTICLE 1103.5. **MIXED USES:** In the case of mixed uses, the required loading and unloading spaces shall be the sum of the required loading and unloading spaces for the various uses computed separately, and such spaces for one use shall not be considered as providing required loading and unloading for any other use.

SECTION 1104. RIGHT-OF-WAY ACQUISITION

The recommendation of the Commission on a proposed zoning district boundary or application for a Special Use Permit may include appropriate provision for acquiring right-of-way for street widening purposes. The amount of land recommended for such acquisition, however, shall not extend beyond the setback lines set forth in Chapter 11, Section 1105. hereof. **7, ***9, ***10, ***11

Date of Revisions			
**7	Added 4-1-85	***10	Renumbered 12-7-87
***9	Renumbered 8-4-86	***11	Renumbered 2-6-89

SECTION 1105. SETBACK LINES

ARTICLE 1105.1. **ESTABLISHMENT:** The following setback lines are hereby established:

1105.1.1. ***Cave Creek Road:*** **105 feet** from and on both sides of the centerline of Cave Creek Road; from the northwest corner of the SW 1/4, Section 14, T4N, R3E, G&SRB&M, to the southerly line of Section 33, T6N, R4E, G&SRB&M.

1105.1.2. ***Scottsdale Road:*** **105 feet** from and on both sides of the centerline of Scottsdale Road; from the northeast corner of Section 10, T4N, R4E, G&SRB&M, to the southerly line of Section 3, T5N, R4E, G&SRB&M.

1105.1.3. ***Major Streets, Section Line Roads, State and Federal Highways:***

1. **75 feet** from and on both sides of the centerline of all existing or proposed major streets, section line roads, State and Federal Highways, where service roads are required.

2. **55 feet** from and on both sides of the centerline of all existing or proposed major streets, section line roads, State and Federal Highways, where service roads are not required.

1105.1.4. ***Collector Streets and Mid-Section Line Roads:*** **40 feet** from and on both sides of the centerline of all existing or proposed collector streets and mid-section line roads.

1105.1.5. ***Local Streets:*** **25 feet** from and on both sides of the centerline of all existing or proposed local streets, except that this requirements shall be increased to **30 feet** for local streets abutting properties in multiple-family residential, commercial and industrial zoning districts.

ARTICLE 1105.2. MEASUREMENT: On any lot wherein a setback line has been established, yards required by the regulations for the zoning district in which such lot is located shall be measured from the setback line. The setback line that includes the future right-of-way shall be enforced unless a written report is received from the County Highway Department stating no future street is recommended along the subject setback line on the subject property. *19

ARTICLE 1105.3 BUILDINGS AND STRUCTURES: Buildings or structures hereafter erected, altered or relocated shall not be placed within the aforementioned setback lines. The setback line that includes the future right-of-way shall be enforced unless a written report is received from the County Highway Department stating no future street is recommended along the subject setback line on the subject property. *19

Date of Revisions			
*19	Revised 2-6-89		

SECTION 1106. ACCESSORY BUILDINGS AND USES*17, *22

ARTICLE 1106.1. CONSTRUCTION AND USE: Accessory buildings or uses shall not be constructed or established on a lot until construction of the principal building has been actually commenced or the primary use established. Accessory buildings shall not be used for dwelling purposes, except if specifically approved in a Residential Unit Plan of Development, pursuant to the provisions of Chapter 10, Section 1002., Article 1002.9. or if approved for occupancy by caretakers employed on the premises or if occupied pursuant to a Temporary Use Permit. *27, *29

ARTICLE 1106.2. LOCATION: Detached accessory buildings may be built in the required rear yard but such accessory buildings shall not occupy more than **30%** of the required rear yard and shall not be nearer than **three feet** to any side or rear lot line or setback line. Should the accessory building be

located partially within the required rear yard and partially within the buildable area, that portion within the buildable area shall meet all side yard regulations of the applicable zoning district. In the case of corner lots, accessory buildings shall not be nearer to the street than a distance equal to not less than **one half** the depth of the required front yard of the corner lot; and when a garage is entered from an alley, it shall not be located nearer than **ten feet** to the alley line. *11

ARTICLE 1106.3. LOCATION ON THROUGH LOTS: Accessory buildings on through lots shall be no nearer to either street than a distance equal to the required front yard of such lot.

Date of Revisions			
*11	Revised 3-21-83	*27	Effective 10-10-97
*17	Revised 4-1-85	*29	Effective 5-16-98
*22	Revised 2-20-94		

SECTION 1107. NUMBER OF PRINCIPAL BUILDINGS ON A LOT

Where a lot is located in a multiple-family residential, commercial or industrial zoning district, more than **one** principal building may be located on the lot but only when the locations of such buildings conform to all the open space requirements around the lot for the zoning district in which the lot is located. Yard regulations in such case may be applied around the principal buildings as though there were only one principal building on the lot.

SECTION 1108. ADJUSTMENT PERMITTING AN ADDITIONAL DWELLING UNIT

In zoning districts permitting multiple-family dwellings, if an amount of lot area not allocated to a dwelling unit is more than **80%** of that required for one dwelling unit, such remaining lot area may be used to satisfy the lot area requirement for an additional dwelling unit.

SECTION 1109. ADDITIONAL LOT AREA AND DIMENSION REGULATIONS

ARTICLE 1109.1. PRE-EXISTING NON-CONFORMING LOTS: Any lot of record existing at the time this Ordinance or amendments thereto become effective, which does not conform with the lot area or width requirements for the zoning district in which it is located may be used for any use permitted in that zoning district provided other applicable regulations of this Ordinance are complied with.

ARTICLE 1109.2. LOT AREA AND DIMENSION: Any lot, after this Ordinance or amendments thereto become effective, shall not be reduced in any manner below the lot area and dimension requirements of this Ordinance for the zoning district in which it is located, or if a lot is already less than the minimums so required, such lot area or dimension shall not be further reduced.

ARTICLE 1109.3. YARD, COVERAGE AND OPEN SPACE: Any lot, after this Ordinance or amendments thereto become effective, shall not be reduced or diminished so as to cause the yards, lot coverage or other open spaces to be less than that required by this Ordinance, or to decrease the lot area per dwelling unit except in conformity with this Ordinance.

SECTION 1110. ADDITIONAL YARD AND OPEN SPACE REGULATIONS

ARTICLE 1110.1 MULTIPLE BUILDINGS: Required yard or other open space around any existing buildings, or which is hereafter provided around any building for the purpose of complying with this Ordinance shall not be construed as providing a yard or open space for any other building.

ARTICLE 1110.2. MULTIPLE STORY BUILDINGS: When an open space is more than **50%** surrounded by a building which is **two stories** or more in height, the minimum width of the open space shall be at least **30 feet** for two-story buildings, and **40 feet** for three-story buildings.

ARTICLE 1110.3. MIXED USE BUILDINGS: Side yards for dwelling units erected above other uses conducted in the same building are not required in excess of the side yards that would be required for such building were it not to contain the dwelling units.

ARTICLE 1110.4. AVERAGE SETBACKS: Deleted [*16]

ARTICLE 1110.5. MOBILE HOME SUBDIVISIONS: Porches, ramadas or awnings that are open on two or more sides and attached to a mobile home shall be excluded from maximum lot coverage regulations for existing mobile homes that are located in mobile home subdivisions, provided a mobile home subdivision plat in connection therewith has been recorded on or before the effective date of this paragraph and further provided there shall be a minimum distance of **ten feet** between structures on adjoining lots.[*4]

ARTICLE 1110.6. EXCEPTIONS: Every part of a required yard shall be open to the sky, unobstructed, except as enumerated in the following:

1110.6.1. Accessory buildings may locate in the required rear yard subject to applicable regulations elsewhere in this Ordinance.

1110.6.2. Ordinary projections of window sills, cornices, eaves and other ornamental features may project a distance not exceeding **two feet** into any required yard, except that in the case of accessory buildings in the required rear yard this projection shall not exceed **one foot** beyond the walls of such accessory buildings.

1110.6.3. Chimneys may project a distance not exceeding **two feet** into any required yard.

1110.6.4. Fire escapes may project a distance not exceeding **five feet** into any required yard provided such projection shall be distant at least **two feet** from any lot line or setback line.

1110.6.5. Bay windows and balconies may project a distance not exceeding **three feet** into the required front or rear yard, provided that such features shall not occupy, in the aggregate, more than **one-third** of the length of the wall of the building on which they are located.

1110.6.6. Uncovered stairs and necessary landings may project a distance not exceeding **six feet** into the required front or rear yard, provided that such stairs and landings shall not extend above the entrance floor of the building except for a railing not to exceed **three feet** in height.

1110.6.7. Terraces, patios, platforms and ornamental features which do not extend more than **three feet** above grade may project into any required yard, provided such features shall be distant at least **two feet** from any lot line or setback line.

Date of Revisions			
*4	Added 3-22-76	*16	Deleted 2-4-85

SECTION 1111. ADDITIONAL HEIGHT REGULATIONS

ARTICLE 1111.1. PUBLIC BUILDINGS: Public or public service buildings, hospitals, institutions, or schools may be erected to a height not exceeding **60 feet**, and churches may be erected to a height not exceeding **75 feet**, if the building is set back from each lot line at least **one foot** for each foot of additional building height above the height limit otherwise permitted in the zoning district in which the building is located.

ARTICLE 1111.2. BUILDING APPURTENANCES: Chimneys, church steeples, refrigeration coolers, ventilating fans, elevator bulkheads, fire towers, ornamental towers

or spires, and mechanical appurtenances necessary to operate and maintain the building, may be erected to a height not exceeding **100 feet**, if such structure is set back from each lot line at least **one foot** for each foot of additional height above the height limit otherwise permitted in the zoning district in which the structure is located. The above setbacks are measured from the lot line to the closest point (including overhangs or other projections) on the structures.[*17,*26,*28]

ARTICLE 1111.3. RUNWAYS AND LANDING STRIPS: Buildings or structures or any portions thereof, except for navigational aids, shall not be located in the obstacle free zone ("OFZ") which shall be defined as an area which is **60 feet wide** along each side of the edge of the runway of an existing or proposed runway or landing strip and **250 feet wide** centered along the projected runway center line at a distance of **200 feet** from the end or ends of an existing or proposed runway or landing strip where takeoff and landing is either executed or proposed. A runway protection zone ("RPZ") shall be located at the end or ends of the existing or proposed runway or landing strip where takeoff or landing is either executed or proposed which shall be a trapezoidal area which is **200 feet** beyond the ends of the runway and centered along the projected runway centerline. The RPZ shall be **1,000 feet long**. The width of the RPZ closest to the end of the runway or landing strip shall be **250 feet**. The width of the RPZ furthest from the end of the runway or landing strip shall be **450 feet**. Within the RPZ, buildings or structures or any portions thereof shall not be erected to exceed a height that would interfere with the takeoff or landing of a plane with a glide angle of **one foot** vertical for every **20 feet** horizontal, such glide angle to be computed as beginning at the RPZ boundary which is closest to the end of the runway. The OFZ or RPZ should be located entirely on the same lot or parcel as the runway or landing strip. In any instance where any portion of the OFZ or RPZ of a runway or landing strip extends beyond the lot or parcel of property containing the runway or landing strip, written consent or avigation easements must be obtained from all property owners in which the OFZ or RPZ may wholly or partially lie. The provisions of this paragraph may be waived for any public or military airport subject to Federal Aviation Administration or Department of Defense requirements.[*35]

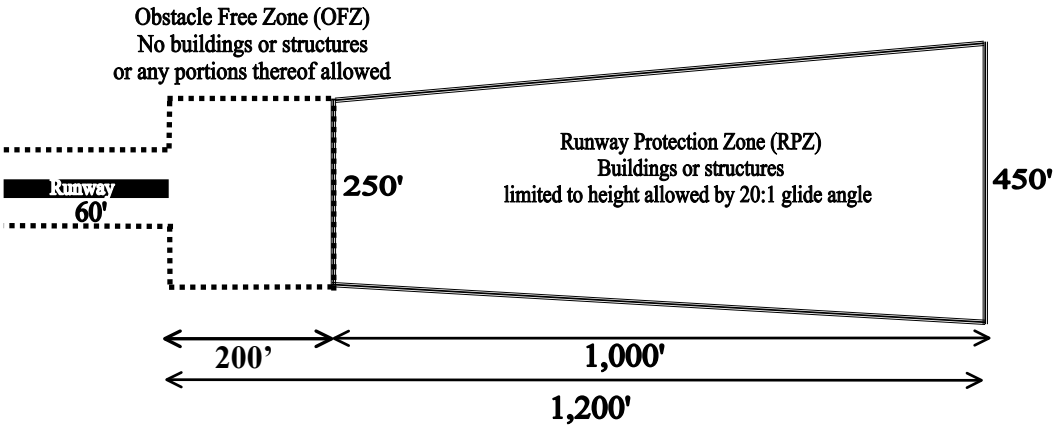

ARTICLE 1111.4. CORNER LOTS: The following limitations shall apply to corner lots in all zoning districts and to driveways in commercial and industrial zoning districts:

1111.4.1. In all zoning districts no structure, landscaping, fence, wall, terrace or other obstruction to view in excess of **two feet** in height, measured from the lowest established elevation of the nearest street centerline, shall be placed within the triangle formed by measuring along street-side and/or alley-side property lines a distance of **25 feet** from their point of intersection and by connecting the ends of the respective **25 feet** distances.*32

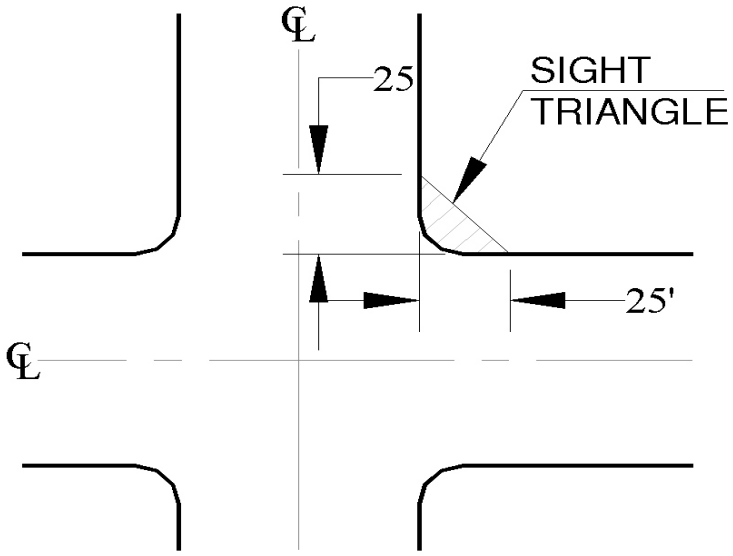

1111.4.2. Further, in commercial and industrial zoning districts no structure, landscaping, fence, wall, terrace or other obstruction to view in excess of **two feet** in height,

measured from the established elevation of the nearest street centerline, shall be placed within the triangle formed by measuring along street-side property line and driveway length a distance of **25 feet** from their point of intersection and by connecting the ends of the respective **25 feet** distances. *32

1111.4.3. Within the said triangles, driveways and parking are prohibited. *33

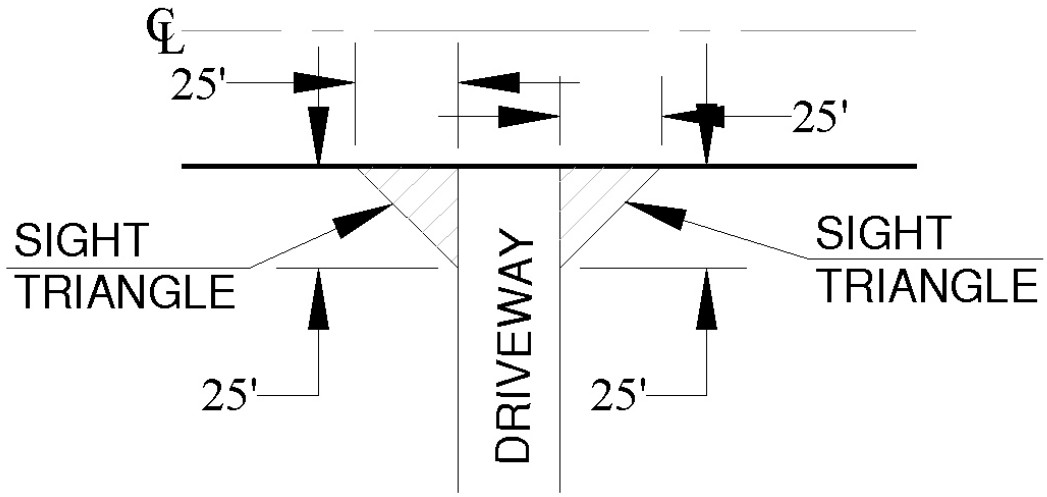

Date of Revisions			
*17	Revised 4-1-85	*32	Effective 2-4-00
*26	Effective 6-13-97	*33	
*28	Effective 1-17-98	*35	Effective 9-7-01

SECTION 1112. OUTDOOR LIGHT CONTROL PROVISIONS*13

ARTICLE 1112.1. PURPOSE: These provisions are intended to control the use of outdoor artificial illuminating devices emitting rays into the night sky which have a detrimental effect on astronomical observations. It is the intention of this Ordinance to encourage good lighting practices such that lighting systems are designed to conserve energy and money, while increasing nighttime safety, utility, security and productivity.

ARTICLE 1112.2. CONFORMANCE WITH APPLICABLE CODES:

1112.2.1. All outdoor artificial illuminating devices shall be installed in conformance with the provisions of this section and any building code now in effect or which may hereafter be enacted, as applicable.

1112.2.2. Where any provisions of the Arizona State Statutes, or any Federal law, or any companion Ordinance conflicts with the requirements of this outdoor light control provision, the most restrictive shall govern.

1112.2.3. The provisions of this section are not intended to prevent the use of any material or method of installation not specifically prescribed by this Ordinance.

1112.2.4. As new lighting technology develops which is useful in reducing light above the horizontal, consideration shall be given to use of state of the art technology in keeping with the intent of the Ordinance.

ARTICLE 1112.3. DEFINITIONS:

1112.3.1. ***Outdoor Light Fixtures:*** Outdoor artificial illuminating devices, outdoor fixtures, lamps and other devices, permanent or portable, used for illumination or advertisement. Such devices shall include, but are not limited to, search, spot or flood lights for:

1. Building and structures;
2. Recreational areas;
3. Parking lot lighting;
4. Landscape lighting;
5. Billboards and other signage (advertising or other);
6. Street lighting.

1112.3.2. ***Approved bottom-mounted outdoor advertising fixture(s):*** An approved fixture design shall mean a system of lighting which is installed at the lower portion of an outdoor advertising sign board and consists of no more than **four** individual fixtures (or lamps) per sign face; produces a maximum of **40,000 lumens per fixture**; and spills or casts beyond the sign face no more than **1,017 lumens per fixture**. *14

1112.3.3. ***Individual:*** Shall mean any private individual, tenant, lessee, owner or any commercial entity, including but not limited to companies, partnerships, joint ventures or corporations. *14

1112.3.4. ***Installed:*** Shall mean the initial installation of outdoor light fixtures defined herein following the effective date of this Ordinance, but shall not apply to those outdoor light fixtures installed prior to such date, except as provided in Article 1112.6.1. below *14

ARTICLE 1112.4. GENERAL REQUIREMENTS:

1112.4.1. ***Shielding:*** All exterior illuminating devices, except those exempt from this Ordinance and those regulated by Article 1112.5.3. shall be fully or partially shielded as required in Article 1112.4.2.

1. *"Fully Shielded"* shall mean that those fixtures so designated shall be shielded in such a manner that light rays emitted by the fixture, either directly from the lamp or indirectly from the fixture, are projected below a horizontal plane running through the lowest point of the fixture where light is emitted.

2. *"Partially shielded"* shall mean that those fixtures so designated shall conform to the classification of *"Cutoff",* defined as follows:

   a. A luminaire light distribution is designated as cutoff when the candle-power per **1,000 lamp lumens** does not numerically exceed **25 lumens** (two and one-half percent) at an angle of **90 degrees** above Nadir (horizontal), and **100 lumens** (ten percent) at a vertical angle of **80 degrees** above Nadir. This applies to any lateral angle around the luminaire.

1112.4.1. ***Filtration:*** Those outdoor light fixtures requiring a filter in Article 1112.4.2. shall have glass, acrylic or translucent enclosures (Quartz Glass does not meet this requirement).

1112.4.2. ***Requirements for Shielding and Filtering:*** The requirements for shielding and filtering light emissions from outdoor light fixtures shall be as set forth in the following table:

FIXTURE LAMP TYPE	SHIELDED	FILTERED
Low pressure sodium *1*	None	None
High pressure sodium	Fully	None

Metal halide *5*	Fully	Yes
Fluorescent *7*	Fully *4*	Yes *2*
Quartz *3*	Fully	None
Incandescent greater than 150 watts	Fully	None
Incandescent, 150 watts or less	None	None
Mercury vapor	Fully *6*	Yes *6*
Fossil fuel	None	None
Glass tubes filled with neon, argon, and krypton	None	None
Other sources	As approved by the zoning inspector	

Footnotes:

1. *This is the preferred light source to minimize undesirable light into the night sky affecting astronomical observations.*

2. *Warm white and natural lamps are preferred to minimize detrimental effects.*

3. *For the purposes of this ordinance, quartz lamps shall not be considered an incandescent light source.*

4. *Outdoor advertising signs of the type constructed of translucent material and wholly illuminated from within do not require shielding.*

5. *Metal Halide display lighting shall not be used for security lighting after 11:00 p.m. (or after closing hours if before 11:00 p.m.) unless fully shielded. Metal Halide lamps shall be in enclosed luminaries.*

6. *Recommended for existing fixtures. The installation of Mercury Vapor Fixtures is prohibited effective ninety (90) days after the date of adoption of this Ordinance.*

7. *Outdoor advertising signs may use fluorescent fixtures. These fixtures must be mounted at the top of the sign structure and may be partially shielded, but not filtered.*

ARTICLE 1112.5. PROHIBITION:

1112.5.1. ***Searchlights:*** The operation of searchlights for advertising purposes is prohibited between the hours of **11:00 p.m.** and **sunrise**.

1112.5.2. ***Recreational Facilities:*** No outdoor recreational facility, public or private, shall be illuminated by non-conforming means after **11:00 p.m**., except to conclude specific recreational or sporting event or any other activity conducted at a ball park, outdoor amphitheater, arena, or similar facility in progress prior to **11:00 p.m**.

1112.5.3. ***Outdoor Building or Landscaping Illumination:*** The unshielded outdoor illumination of any building, landscaping, signing or other purpose is prohibited, except with incandescent fixtures of **150 Watts** or less, or low pressure sodium fixtures.

1112.5.4. ***Mercury Vapor:*** The installation of Mercury Vapor fixtures is prohibited effective **90 days** after the date of adoption of this Ordinance.

ARTICLE 1112.6. PERMANENT EXEMPTIONS:

1112.6.1. ***Non-Conforming Fixtures:*** All outdoor light fixtures installed prior to **January 1, 1985**, that are equipped with a permanent automatic shut-off device may remain unchanged, except that the subject light fixtures shall not be operated between the hours of **11:00 p.m.** and sunrise. All outdoor light fixtures installed prior to **January 1, 1985**, that are not equipped with an automatic shut-off device may remain unchanged. With respect to all outdoor light fixtures installed prior to **January 1, 1985**, whether with an automatic shut-off device or not, there shall be no change in use, replacement, structural alteration, or restoration after discontinuance of use for a period of **12** consecutive months, unless it thereafter conforms to the provisions of these regulations.

1112.6.2. ***Fossil Fuel Light:*** Produced directly or indirectly by the combustion of natural gas or other utility-type fossil fuels.

ARTICLE 1112.7 OTHER EXEMPTIONS FROM OUTDOOR LIGHTING PROVISIONS: *14

1112.7.1. ***Bottom-Mounted Outdoor Advertising Lighting:*** Outdoor advertising sign boards which exceed **301 square feet** per sign face and consist of panels which are designed to be removed from the top of the sign board are exempt from the provisions of this Ordinance if illuminated by an approved bottom-mounted outdoor advertising fixture equipped with an automatic device which shuts off the fixture between midnight and sunrise.

1112.7.2 ***Low Intensity Fixtures:*** Any outdoor lighting fixture which has a maximum candle power of less than **1,000 candelas** is exempt from these provisions, if equipped with an automatic device which shuts off the fixture between the hours of midnight and sunrise.

ARTICLE 1112.8 PROCEDURES FOR COMPLIANCE:[*14]

1112.8.1. ***Applications:***

1. Any individual applying for a Zoning Clearance and intending to install outdoor lighting fixtures shall, as a part of said application, submit evidence that the proposed work will comply with provisions in this ordinance.

2. Utility companies providing a notarized affidavit in which they agree to comply with the provisions of these regulations shall be exempt from applying for and obtaining a permit for the installation of outdoor light fixtures, including residential security lighting.

1112.8.2. ***Contents of Application or Submission:*** The submission shall contain, but shall not necessarily be limited to the following, all or part of which may be part of or in addition to the information required elsewhere in the zoning regulations upon application for the required permit:

1. Plans indicating the location on the premises, the type of illuminating devices, fixtures, lamps, supports and other devices, etc.

2. Description of the illuminating devices, fixtures, lamps, supports and other devices, etc. This description may include, but is not limited to, manufacturers' catalog cuts and/or drawings (including sections where required).

3. The above required plans and descriptions shall be sufficiently complete to enable the Zoning Inspector to readily determine whether compliance with the requirements of this Ordinance will be secured. If such plans and descriptions cannot enable this ready determination by reason of the nature or configuration of the devices, fixtures, or lamps proposed, the applicant shall submit evidence of compliance by certified test reports as performed by a recognized testing lab.

Date of Revisions			
*13	Added 4-2-84	*14	Added 10-29-84

SECTION 1113. FLOOD CONTROL REGULATIONS[*1]

This Zoning Ordinance and all amendments hereto shall be consistent with and subject to the regulations and provisions of the Floodplain Regulations of Maricopa County.

Date of Revisions			
*1	Added 2-4-74		

SECTION 1114. LOCATION OF MOBILE HOMES, TRAVEL TRAILERS, AIRCRAFT, BOATS, CAMPING TRAILERS, TRUCK CAMPERS & MOTOR HOMES

The location of mobile homes and travel trailers outside of mobile home parks, travel trailer parks and mobile home subdivisions, and the location of aircraft, boats, camping trailers, truck campers and motor homes shall be subject to the following: *22

ARTICLE 1114.1. **REGULATIONS:** At no time shall the mobile home, travel trailer, aircraft, boat, camping trailer, truck camper or motor home be occupied or used for living, sleeping or housekeeping purposes, except as provided below: *3, *5, *17

1114.1.1. Mobile homes and travel trailers intended for non-residential use shall be subject to securing a Temporary Use Permit; provided that mobile homes used for quarters for on duty personnel in connection with publicly or privately owned or operated fire stations shall be considered to be a non-residential use in any zoning district and be subject to securing a Temporary Use Permit. *5, *22

1114.1.2. If a travel trailer, aircraft, boat, camping trailer, truck camper or motor home is located or stored outside of a garage or carport it shall be placed in the rear yard of the lot, except that placement in other than the rear yard for loading and unloading purposes may be permitted for a period of time not to exceed **72 hours**. *5, *22

Date of Revisions			
*3	Revised 8-11-75	*17	Revised 4-1-85
*5	Revised 1-3-77	*22	Revised 2-20-94

SECTION 1115. AMATEUR RADIO ANTENNAS AND ANTENNA SUPPORT STRUCTURES*28

ARTICLE 1115.1. **MAXIMUM HEIGHT:** Amateur radio antennas and amateur radio antenna support structures shall not exceed a maximum height of **120 feet** (inclusive of both the support structure and any attached antennas) in any district.

ARTICLE 1115.2. LOCATION: Amateur radio antennas and amateur radio antenna support structures shall be located in the rear yard, except in rural zoning districts on sites of **five acres** or larger where such antennas and support structures may be located anywhere on the buildable area of the lot.

ARTICLE 1115.3. SETBACKS: Amateur radio antennas and amateur radio antenna support structures must meet the yard requirements of primary buildings or structures of the zoning district in which they are located. Such setbacks shall be measured from the lot line to the closest horizontal extension of the antenna support structure or any attachment, including antennas.

ARTICLE 1115.4. SUPPORT STRUCTURES: Amateur radio antennas and amateur radio antenna support structures shall be set back an additional **one foot** (in addition to the yard requirements noted in Article 1115.3. above for every **one foot** in height which the antenna or support structure exceeds the height limitation of the zoning district in which it is located. Such additional setback shall be measured from the lot line to the closest point of the base of the antenna or support structure.

ARTICLE 1115.5. GUY WIRE ANCHORS: Guy wire anchors may be installed within a required setback, but shall not be placed within three feet of any lot line, or within any easement, sight distance triangle, runway or landing strip.

ARTICLE 1115.6. NUMBER OF ALLOWED STRUCTURES: Nothing in this section shall preclude the installation of **two** amateur radio antenna support structures on any lot in the rural zoning districts, provided the standards of this section are met and there is at least **20,000 square feet** of lot area for each antenna support structure.

ARTICLE 1115.7. DEVIATION FROM STANDARDS: No variances to the standards of this section shall be considered, and any amateur radio antenna or amateur radio antenna support structure requiring a deviation from the standards of this section shall require a Special Use Permit.

Date of Revisions			
*28	Effective 1-17-98		

SECTION 1201. HILLSIDE[*1, *2]

ARTICLE 1201.1. **PURPOSE:** The principal purpose of the hillside development standards is to allow the reasonable use and development of hillside areas while promoting the public health, safety, convenience and general welfare of the citizens of Maricopa County and maintaining the character, identity, and image of hillside areas. The primary objectives of the hillside development standards are: to minimize the possible loss of life and property through the careful regulation of development; to protect watershed, natural waterways, and to minimize soil erosion; to ensure that all new development is free from adverse drainage conditions; to encourage the preservation of the existing landscape by maximum retention of natural topographic features; to minimize the scarring of hillside construction.

ARTICLE 1201.2. GENERAL PROVISIONS:

1201.2.1. All portions of a lot or parcel having a natural slope of **15% or greater** within any horizontal distance with a **five foot elevation change** shall be subject to the regulations set forth in this Section.[*3]

1201.2.2. The issuance of grading permits, building permits, hillside development plan approvals, or other approvals of improvement work on any real property, subject to the regulations in this Section, shall not be conditioned on altering, modifying or not utilizing existing grading, construction or other improvements on such real property to conform to the regulations in this Section if such existing grading, construction or other improvement was completed in conformance with valid permits, issued prior to the adoption of this provision.

ARTICLE 1201.3. **USE REGULATIONS:** The use regulations which apply to property in any zoning district with which hillside development standards apply shall remain the same as specified in the primary zoning district unless otherwise specified herein.

ARTICLE 1201.4. **HEIGHT REGULATIONS:** The height of all structures on portions of property having a natural slope of **15% or greater** shall not exceed **30 feet** from original natural grade through any building cross section, measured vertically at any point along that cross section from original natural grade, provided this section shall not apply to transmission towers in excess of **30 feet** for which Special Use Permits have been issued.

ARTICLE 1201.5. **OTHER REGULATIONS:** The yard, intensity of use, parking, loading and unloading, and additional regulations which apply to property in any zoning

district to which hillside development standards apply shall remain the same as specified in the primary zoning district unless otherwise specified herein.

ARTICLE 1201.6. DEVELOPMENT STANDARDS: Development standards shall apply only to development on those portions of a property having a natural slope of **15%** or **greater**. For purposes of this Article grading shall be defined as any excavation or filling or combination thereof.*2

1201.6.1. ***Grading and Drainage Requirements:*** There shall be no grading on or to any site other than percolation and test borings (**100 square feet maximum in size**) prior to the issuance of a Zoning Clearance and prior to final approval of complete plans by the Building Safety Division and the issuance of a Building (grading) Permit.

1. In all rural and residential zoning districts the extent of grading on that portion of a lot which has a natural slope of **15%** or **greater**, shall be limited to a total area not to exceed the lot coverage limitations of the zoning district with the following exceptions:*3

   a. An area for construction purposes, to be reconstructed to original condition prior to certificate of occupancy, consisting of a band **seven feet wide** around the perimeter of all approved buildings and structures.*3

   b. The coverage requirement shall exclude all areas used for sanitary systems such as septic tanks and leach fields.*3

Allowable Lot Coverage by Zoning District in Hillside*3

ZONING DISTRICT	MINIMUM AREA REQUIRED PER LOT	MAXIMUM LOT COVERAGE
Rural-190	190,000-sq.ft.	5%
Rural-70	70,000-sq.ft.	10%
Rural-43	43,560-sq.ft.	15%
R1-35	35,000-sq.ft.	20%
R1-18	18,000-sq.ft.	25%
R1-10	10,000-sq.ft.	30%
R1-8	8,000-sq.ft.	35%
R1-7	7,000-sq.ft.	35%
R1-6	6,000-sq.ft.	40%
R-2	6,000-sq.ft.	50%
R-3	6,000-sq.ft.	50%
R-4	6,000-sq.ft.	50%
R-5	6,000-sq.ft.	50%

2. ***Sewage Disposal System:*** Grading or disturbance of natural terrain and vegetation for the purpose of installing a sewage disposal system shall be confined to within **seven feet** of the outside edge of the elements of that system such as the leaching bed or pits, tank and distribution box, and connecting lines as required by the County Health Department.

3. All utility lines shall be located underground within the driveway graded area whenever possible. If this location is not possible, then disturbance of natural terrain for these lines shall be confined to within **four feet** of either side of the lines.

4. ***Drainage:*** The entrance and exit points and continuity of all natural drainage channels on a hillside site shall be preserved.

5. All cut and fill slopes shall be completely contained by retaining walls or by substitute materials acceptable under the provisions of the Uniform Building Code (including riprap materials) except for:

   a. The minimum amount of swale grading necessary for drainage purposes; or,

   b. The minimum required to establish a driveway with associated parking and turn around areas (see Driveway Requirements); or,

   c. Pursuant to the requirements as listed in Chapter 12, Section 1201. Article 1201.6., subsections 1201.6.2., 1201.6.3., and 1201.6.4.

1201.6.2 ***Retaining Wall Requirements:***

1. For the purpose of this provision, a retaining wall is a wall or terraced combination of walls used to retain earth but not supporting a wall of a building.[*2]

2. The height of a retaining wall is as measured from low side natural grade to the top of the wall, whether the top is retaining earth or not. Open railings on top of retaining walls are not included in height measurements. The height of the retaining wall shall be included in the permitted building height if the face of the building is within **15 feet** of the retaining wall.

3. The average height of a retaining wall shall be computed by taking the total vertical surface area of the wall above grade and dividing it by its length.

4. The maximum height and average height of a retaining wall shall not exceed the following:

AVERAGE PERCENTAGE OF SLOPE AT BUILDING*	MAXIMUM HEIGHT (FT.)	AVERAGE HEIGHT (FT.)
15% - 25%	10′	6′
25% - 30%	13′	8′
30% - 35%	13′	9′
35% - Over	18′	11′

*As determined by averaging percentage of slopes shown on sections through building on site plan submittal.

5. The finished surfaces of any retaining wall shall blend into the natural setting.

1201.6.3. ***Driveway Requirements:*** The area of natural terrain and vegetation disturbed for the purpose of vehicle access to any portion of the lot or parcel shall be limited as follows:[*3]

1. The paved width of driveways shall not exceed **14 feet** except at parking and turnaround.

2. Exposed cut or fill slopes are acceptable for driveway construction, but the height of these slopes shall be limited to an average of **four feet** on either side for the length of the driveway, but not to exceed **eight feet**, provided the combination does not exceed **12 feet**. A maximum of **one-third** of the cross sectional width of driveway at any point may be on fill material and a minimum of **two-thirds** of the cross sectional width shall be on cut material or natural grade. An exception to this provision for wash crossings may only be made with the approval of the Flood Control District.[*3]

3. At turn around areas adjacent to garages, exposed cut slopes or retaining walls shall be limited to heights for retaining walls as specified under "Retaining Walls" in this provision.[*2]

1201.6.4. ***Slope Stabilization and Restoration:***

1. Vegetation shall be reestablished on all exposed fill slopes, cut slopes, and graded areas by means of a mixture of grasses, shrubs, trees or cacti to provide a basic ground cover which will prevent erosion and permit natural

revegetation. In lieu of the reestablishment of vegetation, all exposed cut slopes shall be riprapped with stone or chemically stain treated with materials which blend in with the natural setting.

ARTICLE 1201.7. HILLSIDE ROADWAY STANDARDS:[*3]

1201.7.1. 1. A permit from the Planning and Development Department shall be required to construct a private hillside road for each lot over which construction will occur. Said permit shall not be issued until plans have been approved by Maricopa County Department of Transportation.

2. Those portions of private hillside roads, inclusive of cut and fill, that are **24 feet in width** or **less** shall be exempt from the disturbance calculations for hillside development.

3. The applicant shall provide engineered plans, prepared by a registered civil engineer, licensed in the state of Arizona, for all private hillside roads to ensure compliance with the design criteria as set forth in a *Policy on Geometric Design of Highways and Streets*.

4. The design of safe and efficient roads must carefully consider soil conditions. (Depending on soil conditions, it may be necessary to provide an engineered design for roadways with grades less than 15%).

5. The site plan shall include a note stating who will maintain the road. The site plan shall also include a note indicating the approval of the appropriate fire agency.

6. Wash crossings shall not impede or adversely alter drainage. Wash crossings shall be stabilized to minimize maintenance.

7. The following criteria shall be considered the minimum design guidelines for private hillside roads and should not substitute for sound engineering judgment:

a. Roadway geometry: Design criteria as set forth in a *Policy on Geometric Design of Highways and Streets* for local service roads (adopted AASHTO* Standards) shall be used as a guideline. Note that these standards are primarily for paved roadways. The engineer may need to compensate for less stable roadway surfaces.

b. Roadway width *(w):* when determining the roadway width, consideration should be given to the typical vehicle types expected,

the anticipated traffic volumes and minimizing hillside disturbance. Roadway widths shall be a minimum of **12 feet**. The applicable fire agency or other agencies may require more width. Where *w*< **18 feet**, turnouts shall be provided at reasonable intervals to allow two-way traffic to pass. Widening on the inside of sharp curves or locations where safe stopping sight distance is not available should be provided. As a minimum, a "mh" design vehicle shall be used to accommodate fire protection apparatus.

c. Roadway surface: surface material should consider roadway grades and drainage and should provide for a stable, low maintenance driving surface under wet and dry conditions.

8. A letter certifying completion of the roadway in conformance with the sealed as-built plans from an engineer shall be submitted prior to building permits being issued for a hillside lot or parcel that has access from said road.

ARTICLE 1201.8. PROCEDURAL REGULATIONS:

1201.8.1. Prior to the issuance of a Zoning Clearance, a Plan of Development shall be submitted to and approved by the Planning and Zoning Commission for all uses, except for single-family residential and their accessories, on those portions of properties having a natural slope of **15% or greater**.*2

1. The Plan of Development shall be referred to the Planning and Zoning Commission upon report and recommendation from the Director and other county departments, and shall include those items which are required to obtain a Zoning Clearance as identified herein.

2. The approval of the Plan of Development by the Planning and Zoning Commission may include reasonable additional requirements as to grading, cut and fill, slope restoration, signs, vehicular ingress and egress, parking, lighting, setbacks of buildings, etc., to the extent that the noted purpose and objectives of this Section are maintained and ensured.

1201.8.2. In addition to the otherwise noted procedural and information requirements of this provision, all applications for a Zoning Clearance on those portions of properties having a natural slope of **15%** or **greater** (including single-family residential uses) shall contain the following materials and information:*2

1. ***Site Plan:***

a. Contour interval not exceeding **five foot** intervals.

b. Site plan must be submitted on/or along with a topographic survey prepared by a civil engineer or registered land surveyor.

c. Scale of the site plan shall be not less than **1"=20'-0"**.

d. At all structures show sections through site and building at **25'0"** intervals perpendicular to slope, giving percentage of slope at each, and showing exact heights of structures at each existing contour.

e. Each flood level shall be shown with different shading with a legend giving grade or elevation of each level.

f. Give proposed elevation or grade at garage floor and at existing street level at drive entry. Give percentage of total average slope, and percent and length of single steepest portion of driveway.

g. Give square footage of building, garage, patios and pool area individually.

h. Dot in all disturbed (or graded) areas and show the proposed method of final treatment. Dash in all retaining walls, showing the amount allowed (per regulations) and amount used.

i. Show how drainage is altered, and if so, how it is redirected to original channel and show that the requirements regarding storm water runoff and drainage have been met.

j. Show location of all proposed utility lines, and septic tank or sewage disposal areas.

k. Give legal description, property dimensions and heading, name, address and telephone number of submitter.

2. ***Elevations:***

a. Show all **four elevations**, giving accurate existing and proposed grade lines (**Scale 1"=10'**).[*3]

b. Show total height of building, and give height and square footage of all retaining walls.

c. Provide a table on the plan which provides the following information:[*3]

1. Gross area of lot (sq.ft.)

2. Area of lot that is hillside (sq.ft.)

3. Area of hillside on lot that has been previously disturbed (if applicable). (sq.ft.)

4. Area of hillside on lot that is proposed to be disturbed. (sq.ft.)

5. Area of hillside in **seven foot band** around building perimeters. (sq.ft.)

6. Area of hillside on lot that is disturbed for septic tanks and leach fields. (sq.ft.)

7. Net hillside area disturbed (3+4-5-6) (sq.ft.)

8. Percent of hillside disturbed (7/2) (%)

Date of Revisions			
*1	Added 2-15-83	*3	Added 10-4-01
*2	Revised 1-4-89		

SECTION 1202. WIRELESS COMMUNICATION FACILITIES*1

ARTICLE 1202.1. PURPOSE: The principal purpose of this district is to establish the locations in unincorporated Maricopa County where communication facilities may be located and the regulations that apply to their placement. The regulations contained herein are designed to recognize the need to accommodate the approval of those types of public utility uses while still recognizing the need to promote the public health, safety and general welfare of the citizens of Maricopa County. These regulations establish zoning standards that will protect the integrity of single-family neighborhoods and maintain the character, identity, and image of hillside areas.

ARTICLE 1202.2. GENERAL PROVISIONS

1202.2.1. The Wireless Communication Facilities Use Districts are divided into **three use districts** (see attached Use Districts Map) according to the following criteria*1:

1. ***District 1:*** The areas of unincorporated Maricopa County which are either planned or developed to an urban density and/or in designated scenic areas (e.g. scenic highways) in proximity to these urban areas.

a. ***District 1-A:*** Those areas within District 1 which are located along and within **one mile** of U.S. Interstate 17, U.S. 60-89 (exclusive of the Sun City and Sun City West developments), State Highway 71 and State Highway 87 east of the Fort McDowell Mohave/Apache Native American community[*1].

2. ***District 2:*** Buffer areas or major highways (including I-10 but excluding Interstate 17, U.S. Highway 60-89, State Highway 87, Interstate 8 and State Highway 71) around urban/developed and/or scenic areas[*1].

3. ***District 3:*** Those areas of unincorporated Maricopa County which are not within District 1, District 1-A or District 2[*1].

1202.2.2. Wireless communication facilities are permitted on individual lots of record, or on lease or easement areas described by metes and bounds of any size in Districts 1, 1a, 2 and 3[*1].

1202.2.3. The construction and location of cellular communication facilities shall be subject to the standards contained in this regulation, unless otherwise noted herein.

1202.2.4. Wireless communication structures in excess of **199 feet** in height and located within **three miles** of a military or municipal airport shall be required to obtain Special Use Permit approval of the Board of Supervisors[*1].

1202.2.5. The administrative approval process, as applied to this Section, shall involve the following procedure:

1. An application, together with supporting plans, documentation and fees shall be submitted to the Zoning Division of the Department. The names and addresses of all property owners of record as set forth in the records of the Maricopa County Assessor within **300 feet** of the metes and bounds description of the area on which the wireless communication facility is proposed shall be submitted by the applicant as a part of the application. [*1]

2. The Plan Review Division of the Department shall notify all property owners within **300 feet** of the metes and bounds description of the area on which the wireless communication facility is proposed, of the administrative approval request by first-class mail[*1].

3. The Plan Review Division of the Department shall authorize administrative approval for the wireless communication structure if a written objection/protest is not received from any person notified pursuant to paragraph 1202.2.5.2. above within **14 days** from the date the notice is

mailed. If a written objection/protest from any person notified pursuant to paragraph 1202.2.5.2. is received, the Director may withhold approval of the administrative approval request. If a written objection/protest is rescinded or withdrawn after the Plan Review Division of the Department has withheld approval, the Plan Review Division of the Department shall approve the administrative approval request.[*1]

4. Provided, however, the Plan Review Division of the Department may authorize the administrative approval, even though a written protest has been received, if it is determined by the Plan Review Division of the Department that the public health, safety and general welfare will not be adversely affected, and that necessary safeguards will be provided for the protection of adjacent property or the permitted uses thereof; provided that the property owners and the applicant noted herein are notified of same and given an additional **14 days** to appeal to the Director of the Department, and if an appeal is made, shall make the final decision.[*1]

ARTICLE 1202.3. STANDARDS: The following standards shall apply in the Wireless Communication Facilities Use Districts[*1]:

1202.3.1. ***District 1*** (Urban/Developed or Scenic):

1. In Rural, or Single-Family Residential Zoning Districts, land classified by the Assessor as Agricultural or Multiple-Family Zoning Districts, wireless communication facilities are allowed as accessory uses to nonresidential uses, subject to the following limitations[*1]:

   a. The wireless communication facility shall replace an existing pole, light standard, communication facility or other pole-like structure of the same or less height and similar circumference that has been in existence for at least **one year**, or the antennae shall be attached to an existing pole or structure that has been in existence for at least **one year**, that otherwise meets applicable provisions of this Ordinance. Existing poles and/or structures in existence for less than **one year**, including proposed facilities within Development Master Plan areas, may be approved at the discretion of the Director of the Department.[*1]

   b. The maximum height of a wireless communications facility including the base, platform and attached antennae shall not exceed **80 feet** above grade or the height of the structure set forth in Section 1202.3.1.1.a. above, whichever is greater.[*1]

c. Up to **two wireless communication facilities** may be mounted on a building and may include not more than **two microwave antennae dishes** with diameters of not more than **one and one half meters** (4.9 feet) each, and each being **15 feet** or less in height as measured above the roofline so long as the supporting structure is screened.[*1]

d. Any microwave dish antennae shall be clustered near the top of a cellular communication facility, unless otherwise approved by the Director.

e. The color of a wireless communication facility shall be compatible with the surrounding environment. [*1]

f. Installation of a wireless communication facility shall avoid removal of mature trees and cacti unless a plan for their relocation is approved by the Department. [*1]

g. Wireless communication facilities which are installed on properties on or within **500 feet** of a property required to meet Hillside Development Standards of Chapter 12, Section 1201. of this Ordinance shall be required to obtain Special Use Permit approval of the Board of Supervisors. [*1]

h. Wireless communication facilities shall be setback **80 feet** from all property lines. Other yard requirements may be approved by the Planning Director subject to the requirements for administrative approval contained herein.[*1]

i. Radiation from the antennae shall not interfere with any existing communication sites.

j. The maximum diameter of any microwave dish shall be **one and one half meters** (**4.9 feet**) unless a larger size is approved by the Director as an administrative approval, subject to the requirements for administrative approval contained herein.

k. All ground-mounted equipment associated with a wireless communication facility shall be completely screened from public view by landscaping, natural features, or existing structures. To the extent possible, all structures and related equipment shall be screened and designed to blend in with the surrounding environment. All panel antennae and related hardware and cables that are

mounted on an existing structure shall be painted to match that of the existing structure or camouflaged to reduce visual impacts.*1

l. **One parking space** for the maintenance of the wireless communication facility must be provided. Said parking space must be paved to reduce the emission of dust.*1

m. A solid screen wall of a maximum of **six feet high** shall be constructed around the facility and shall screen all equipment.*1

n. All permanent generators associated with any wireless communication facility shall be contained in a completely enclosed building.*1

2. In commercial or industrial zoning districts, wireless communication facilities are permitted subject to the following limitations:*1

a. The wireless communication facility, if exceeding the height requirements of the zoning district in which it is located, shall be set back from a property line that abuts land located in a Rural or Residential Zoning District **two feet** for every **one foot** in height of the wireless communication facility. Notwithstanding the foregoing, the wireless communication facility shall be permitted to be located in alignment with the front of the principal building on the lot or parcel on which the wireless communication facility is erected provided the wireless communication facility is located a minimum of **100 feet** from an adjacent single-family district property line.*1

b. The maximum height of a wireless communications facility including the base, platform and attached antennae, shall not exceed **80 feet** above grade provided, however, the Director may administratively approve a maximum height not to exceed **110 feet above grade**, subject to the requirements for administrative approval contained herein.*1

c. Up to **two** wireless communication facilities may be mounted on a building and may include not more than **two** microwave antennae dishes with diameters of not more than **one and one half meters** (**4.9 feet**) each, and each being **15 feet** or **less** in height as measured above the roofline so long as the supporting structure is screened. *1

d. Any microwave dish antennae shall be clustered near the top of a wireless communication facility, unless otherwise approved by the Director. *1

e. The color of a wireless communication facility shall be compatible with surrounding environment. *1

f. Installation of a wireless communication facility shall avoid removal of mature trees and cacti unless a plan for their relocation is approved by the Department. *1

g. Wireless communication facilities which are installed on properties on or within **500 feet** of a property required to meet Hillside Development Standards of Chapter 12, Section 1201. of this Ordinance shall be required to obtain Special Use Permit approval of the Board of Supervisors. *1

h. Wireless communication facilities shall be required to meet yard requirements of primary buildings or structures of the zoning district in which they are located, unless otherwise specified herein. *1

i. Radiation from the antennae shall not interfere with any existing communication sites.

j. The maximum diameter of any microwave dish shall be **one and one half meters** (**4.9 feet**), unless a larger size is approved by the Director as an administrative approval, subject to the requirements for administrative approval contained herein.

1202.3.2. ***District 1-A***[*1]

1. Wireless communication facilities shall be allowed in any zoning district subject to the same standards and height applied in Chapter 12, Section 1201., Article 1202.3.1.2.

1202.3.3. ***District 2***[*1]

1. Wireless communication facilities plus structures or towers and related facilities used exclusively for wireless communication purposes shall be permitted in any zoning district, subject to the following limitations:[*1]

a. The maximum height of a wireless communications facility or structure or towers including the base, platform and attached antennae shall not exceed **110 feet** above grade, except that along

and within **one mile** of U.S. Interstate-10 (I-10) the height shall not exceed **250 feet** above grade. *1

b. The wireless communication facility or structure or tower in item 1202.3.3.1.a. ,shall be set back from a property line that abuts land located in a Rural or Residential Zoning District, or along or within **one mile** of the right-of-way of U.S. Interstate-10 (I-10), **two feet** for every **one foot** in height of the wireless communication structure. *1

c. Wireless communication facilities may be mounted on a building and may include any number of microwave antennae dishes each being **15 feet** or **less** in height as measured above the roofline so long as the supporting structure is screened. *1

d. The color of a wireless communication facility or structure or tower shall be compatible with the surrounding environment unless otherwise required for safety purposes. *1

e. Installation of a wireless communication facility or structure or tower shall avoid removal of mature trees and cacti unless a plan for their relocation is approved by the Department. *1

f. Wireless communication facilities or structures or towers which are installed on properties on or within **500 feet** of a property required to meet Hillside Development Standards of Chapter 12, Section 1201. of this Ordinance shall be required to obtain Special Use Permit approval of the Board of Supervisors. *1

g. Except as specified in Chapter 12, Section 1202.3.3.1.b., wireless communication facilities or structures or towers shall be required to meet yard requirements of primary buildings or structures of the zoning district in which they are located, unless a lesser setback is approved as an administrative approval by the Director, subject to the requirements of administrative approval contained herein. *1

h. Radiation from the antennae shall not interfere with any existing communication sites.

1202.3.4. ***District 3***[*1]

1. Wireless communication facilities plus structures including tower, and related facilities used exclusively for wireless communication purposes shall be

permitted in any zoning district without limitation, subject to the following standards:*1

a. The color of a wireless communication facility or structure or tower shall be compatible with the surrounding environment unless otherwise required for safety. *1

b. Installation of a wireless communication facility or structure or tower shall avoid removal of mature trees and cacti unless a plan for their relocation is approved by the Department. *1

c. Wireless communication facilities or structures or towers which are installed on properties on or within **500 feet** of a property required to meet Hillside Development Standards of Chapter 12, Section 1201. of this Ordinance shall be required to obtain Special Use Permit approval of the Board of Supervisors. *1

d. Radiation from the antennae shall not interfere with any existing communication sites.

Date of Revisions			
*1	Effective 10-4-01		

SECTION 1203. MOBILE HOME PARKS*15

ARTICLE 1203.1. STANDARDS:

1203.1.1. Each mobile home space shall have an area of not less than **3,000 square feet** and an average width of not less than **44 feet**.

1203.1.2. Travel trailers or manufactured homes may be located on mobile home spaces but the minimum setbacks required of mobile homes shall be provided, and the appropriate sections of County plumbing and health codes must be complied with.*25

1203.1.3. Mobile homes, travel trailers, manufactured homes or detached accessory structures shall be located on mobile home spaces so as to provide a minimum setback from any mobile home space boundary, including boundaries in common with the edge of any interior drive or roadway, of not less than **five feet**, unless otherwise specified herein. Each mobile home or travel trailer shall set back from lot lines or required park screening a distance of not less than **ten feet**.

1203.1.4. The minimum distance between mobile homes, travel trailers, manufactured homes or detached accessory structures, and the minimum distance between mobile

homes or travel trailers and buildings in the same mobile home park shall be **ten feet**, unless otherwise specified herein. *25

1203.1.5. A mobile home park shall provide a minimum **ten foot** clear unobstructed area from front lot lines and a minimum **ten foot** clear unobstructed area from street side lot lines. These areas shall be provided with appropriate landscaping, including necessary water maintenance facilities. These clear unobstructed areas shall not be utilized in determining space boundaries, dimensions or setbacks.

1203.1.6. Service buildings to house toilet, bathing and other sanitation facilities and utilities shall be provided as required by the Maricopa County Health Department.

1203.1.7. Street improvements to Maricopa County streets standards for any public roads bounding the mobile home park shall be made as required by the Maricopa County Highway Department at the time of development of the park.

1203.1.8. Provision for on-site storm water retention/drainage and off-site storm water drainage both entering and leaving the property shall be as required by the Maricopa County Department of Planning and Development and the Flood Control District.

1203.1.9. Each mobile home park shall provide fire protection facilities as required in the Uniform Fire Code.

1203.1.10. Minimum distance or setbacks required herein shall be the shortest of horizontal dimensions measured from the nearest portion of the side wall of a mobile home, manufactured home or travel trailer, or from any attached patio cover, carport, cabana, ramada or similar appurtenances. Detached accessory storage structures, containing a maximum area of **100 square feet** and located in the rear **one-third** of a mobile home space shall not be included in these distance or setback requirements, unless the mobile home space is adjacent to a lot line, in which case the minimum distances or setbacks shall apply. No accessory storage structure shall be located so as to limit access to utility compartments and services. *24

1203.1.11. All interior drives or roadways within the mobile home park shall be a minimum width of **26 feet**, exclusive of curbs and walkways, measured from edge of pavement to edge of pavement. The interior drives or roadways shall be paved with a minimum of **two inches** of **asphalt over four inches** of **A.B.C.** or its equivalent.

1203.1.12. The mobile home park shall be permanently screened from surrounding lots by a solid fence, wall, or suitable planting, **six feet** in height.

1203.1.13. The height, yard, and intensity of use regulations of the **R1-6 Zoning District** shall apply to buildings located in mobile home parks but not to the mobile homes or travel trailers or detached accessory buildings containing a maximum area of **100 square feet** located in the rear **one-third** of a mobile home space.

1203.1.14. No zoning clearance for the location of a mobile home or travel trailer on individual mobile home spaces shall be issued until such time as the requirements for mobile home park development as listed herein have been certified as being completed, in accordance with the approved plan of development, by a licensed engineer.

1203.1.15. Mobile home subdivision lots shall not be utilized for mobile home park purposes.

1203.1.16. Access to all mobile home spaces shall be from the interior of the park. There shall be no individual access to any mobile home space from a public street.

1203.1.17. In mobile home parks that contain **ten** or **more** mobile home spaces, there shall be provided a minimum of **100 square feet** of recreational open space and/or recreational facilities for each mobile home space. Public or private streets, vehicle storage areas and exterior boundary landscaping areas shall not be included in calculating recreational open space.

1203.1.18. The signs identifying mobile home parks shall be subject to the standards as set forth in Chapter 14, Article 1407.

1203.1.19. The parking regulations for mobile home parks are as provided in Chapter 11, Article 1102. hereof.

1203.1.20. Any outdoor mobile home park lighting shall be placed so as to reflect light away from adjoining rural or residential zoning district and shall be in accordance with any adopted County Outdoor Lighting Ordinance.

1203.1.21. Mobile home parks that have been developed prior to the effective date of this Ordinance shall be permitted to meet the Zoning Ordinance setback requirements for mobile home parks in effect at the time of their development.

Date of Revisions			
*15	Revised 1-7-85	*25	Revised 7-23-94
*24	Revised 5-6-94		

SECTION 1204. PROTECTED DEVELOPMENT RIGHTS[*1]

ARTICLE 1204.1. PURPOSE: This article implements Arizona Revised Statutes Section 11-1201 et seq., which allows a county to provide for protected development rights through approval of Protected Development Right Plans, as defined in Chapter 11, Section 1101., Article 1101.2. below. [*2]

ARTICLE 1204.2. PROTECTED DEVELOPMENT RIGHT PLANS: A "Protected Development Right Plan" means a plan for the development of property approved by Maricopa County pursuant to the Maricopa County Zoning Ordinance Chapter 9 (Industrial Zoning Districts), Articles 901.11.1, 902.11.1, and 903.11.1; Chapter 10, Article 1005.6 (Planned Development Overlay Plans); Chapter 10, Articles 1002.2, 1003.2, and 1004.2 (Plans of Development); and Maricopa County Subdivision Regulations, Article II, Section 206 (Development Master Plans), and Article II, Section 203 (Final Subdivision Plats).[*2] A phased plan for the development of property must indicate the type and intensity of uses for each development parcel within the phased project, and the landowner shall submit a more detailed plan for each phase of a phased development to obtain final site development approval to develop the property.

ARTICLE 1204.3. PROTECTED DEVELOPMENT RIGHT: The protected development right confers on the landowner the right to undertake and complete the development and use of the property under the terms and conditions of the protected development right plan, and precludes enforcement against the property to which the protected development right applies of any legislative or administrative land use regulation that would change, alter, impair, prevent, diminish, delay, or otherwise impact the development or use of the property as set forth in the Protected Development Right Plan, except under the following circumstances:

1204.3.1. With the consent of the landowner.

1204.3.2. On findings, by ordinance or resolution and after notice and a public hearing, that natural or man-made hazards on or in the immediate vicinity of the property, if uncorrected, would pose a serious threat to the public health, safety and welfare if the project were to proceed as approved in the Protected Development Right Plan.

1204.3.3. On findings, by ordinance or resolution and after notice and a hearing, that the landowner or his representative intentionally supplied inaccurate information or made material misrepresentations that made a difference in the approval of the Protected Development Right Plan.

1204.3.4. On the enactment of a state or federal law or regulation that precludes development as approved in the Protected Development Right Plan, in which case the County Board of Supervisors, after notice and a hearing, may modify the affected provisions, on a finding that the change in state or federal law has a fundamental effect on the Protected Development Right Plan.

A protected development right does not preclude the enforcement of a subsequently adopted overlay zoning classification that imposes additional requirements and that does not affect the allowable type or density of use, or ordinances or regulations that are general in nature and that are applicable to all property subject to land use regulation by the county, such as building, fire, plumbing, electrical, and mechanical codes.

ARTICLE 1204.4. DURATION OF A PROTECTED DEVELOPMENT RIGHT: A protected development right established pursuant to a Protected Development Right Plan is valid for **three years** for a non-phased development, **five years** for a phased development, and **ten years** for a phased development that contains at least **one section** of land as defined by 43 United States Code 751 or has a gross acreage of more than **640 acres**.

The duration of a protected development right shall be extended for a maximum of **two additional years** for a non-phased or phased development, and **ten additional years** for a phased development that contains at least **one section** of land as defined above or has a gross acreage of more than **640 acres** if the landowner demonstrates that a longer time period is warranted by relevant circumstances, including the size, type and phasing of the development on the property, the level of investment of the landowner, economic cycles or market conditions.

A protected development right terminates at the end of the applicable period established under this section. If a building permit has been issued before the date of termination of a protected development right, the protected development right remains valid until the building permit expires, but in no event for longer than **one year**. On expiration, only principal structures for which footings or foundations have been completed may be finished under the protected development right. On the expiration of a protected development right, development may continue based on a valid building permit and according to standards in effect at that time. An unexpired building permit issued for a property with a protected development right does not expire or shall not be revoked merely because a protected development right expires under the time limitations specified in this section. Nothing in this Article precludes development based on common law principals vested rights or rights granted pursuant to a development agreement.

The commencement of a protected development right period shall be the effective date of valid approval of the Protected Development Right Plan or **July 17, 1994**, the effective date of the protected development right statute, whichever date is later. The protected development right period shall be noted on the Protected Development Right Plan. Protected Development Right Plans approved prior to the date of this Chapter may be resubmitted to the Department with the applicable protected development right period noted on the plan.

ARTICLE 1204.5. APPLICABILITY: This Chapter shall be applicable to all Protected Development Right Plans, as defined in Article 1204.4. above, approved by Maricopa County after **July 17, 1994**, the effective date of the protected development rights enabling statute, if approved and identified as a Protected Development Right Plan at the time of approval.*2

Date of Revisions	
*1	Added 11-20-95
*2	Effective 5-16-98

SECTION 1205. DRAINAGE PROVISIONS

Provisions for on-site storm water retention/drainage and off-site storm water drainage both entering and leaving the property shall be as required by the Maricopa County Department of Planning and Development and Flood Control District for all two-family, multiple-family, commercial, and industrial zoning districts, as well as special uses and unit plans of development. *1 5

Procedures for obtaining approval shall be adopted by the Maricopa County Board of Supervisors upon recommendation of the Planning and Zoning Commission.

Date of Revisions	
*15	Revised 1-7-85

SECTION 1301. SPECIAL USES

ARTICLE 1301.1. SPECIAL USES[*2]**:** The Board of Supervisors may permit as a Special Use any of the following uses in zoning districts from which they are otherwise prohibited by this Ordinance:

1301.1.1. Agriculturally oriented operations and facilities such as but not limited to:[*3, *16]

1. Cotton gins, but not including the manufacturing or processing of by-products.

2. Storage, mixing and/or blending, sale and distribution of agricultural chemicals, but not the manufacturer thereof.

3. Custom meat processing plants including slaughtering, butchering and temporary storage of products, but not including rendering or refining of by-products, storage of offal, tanning or storage of hides, wholesale or retail sales.

4. Storage and maintenance of specialized machinery and equipment used specifically in agriculture or rural areas.

5. Commercial aquaculture facilities to include breeding and holding lakes and ponds.

6. Non-agricultural operations of facilities which were established for and which continue to be operated primarily for agricultural uses. [*16]

1301.1.2. Airports, heliports and other landing areas provided that the OFZ or RPZ as defined in Chapter 11, Section 1111, Article 1111.3. should be located entirely on the same lot or parcel as the runway or landing strip. In any instance where any portion of the OFZ or RPZ of a runway or landing strip extends beyond the lot or parcel of property containing the runway or landing strip, written consent or aviation easements must be obtained from all property owners in which the OFZ or RPZ may wholly or partially lie.[*26]

1301.1.3. Amusement parks, arcades, drive-in or outdoor theaters, miniature golf courses, and golf driving ranges.

1301.1.4. Cemeteries, including pet cemeteries and mausoleums, including accessory uses such as mortuaries.

1301.1.5. Circus and carnival grounds having permanent facilities.

1301.1.6. Development or extraction of earth products, clay, coal, gas, gravel, minerals, sand, stone and topsoil.

1301.1.7. Dormitories, commercial.

1301.1.8. Experimental and proving grounds.

1301.1.9. Feed lots, commercial.

1301.1.10. Feed stores.

1301.1.11. Group care facilities and hospitals and institutions of an educational, religious, charitable or philanthropic nature, homes for the aged, nursing homes, convalescent homes and group homes of more than **ten residents** for the handicapped and adult care. *11, *13

1301.1.12. Guest ranches.

1301.1.13. Kennels.

1301.1.14. Mobile home parks subject to all the development standards applicable to mobile home parks specified in Chapter 12, Section 1203. herein. *5

1301.1.15. Mobile home subdivisions and individual lots in the subdivision shall be subject to the height, yard, intensity of use, and parking regulations for the zoning district in which such lots are located, except that in zoning districts where the regulations require a minimum rear yard of **25 feet**, there may be a rear yard having a depth of not less than **15 feet**, in the mobile home subdivision where a mobile home subdivision plat in connection therewith has been recorded on or before **August 2, 1976**, and further except that the number of mobile homes or travel trailers in such subdivision shall be limited to **one** on each individual lot.

1301.1.16. Permanent facilities for rodeos, auctions, swap meets, campgrounds, sites rented for private parties or similar types of land use involving large assemblage of people.

1301.1.17. Plant nurseries, which are herewith defined as establishments where trees, shrubs, flowers and other plants are grown on or brought to the premises and maintained there for the purposes of sale from said premises. Such other additional products shall be permitted to be sold from the premises as are customarily incidental to the operation of a plant nursery.

1301.1.18. Private clubs and fraternal organizations, excluding such use for which the chief activity is a service customarily conducted as a business.

1301.1.19. Privately and commercially operated recreational open-air facilities, including but not limited to lakes, swimming pools and tennis courts.

1301.1.20. Public riding and boarding stables, provided the buildings housing animals are set back from all lot lines a distance of not less than **100 feet**.

1301.1.21. Public utility treatment and generating plants including sewage, wastewater, power, electrical, nuclear and solar, and including ancillary offices. Attendant facilities and appurtenances to the above uses as well as uses associated with service to the public of water, gas, telephone and cable television.[*24]

1301.1.22. Race tracks.

1301.1.23. Refining, processing and manufacturing of oil, condensate, gas and the production of any products resulting from this refining, processing and manufacturing.

1301.1.24. Resort hotels.

1301.1.25. Sanitary landfills and hazardous waste dumps.

1301.1.26. Sports arenas.

1301.1.27. Commercial storage of mobile homes, travel trailers, boats and aircraft on sites of not less than **one acre**.

1301.1.28. Primary or accessory commercial television, microwave and radio transmitter, receiving stations and towers and dishes, including earth stations.

1301.1.29. Travel trailer or recreation vehicle (RV) parks provided that:[**13]

1. Each travel trailer or RV space shall have an area of not less than **1,250 square feet** and a width of not less than **25 feet**. Only **one travel trailer or RV** shall be placed on each space.

2. Travel trailers, RVs and accessory structures shall be located to provide a minimum setback of not less than **five feet** from all space lines. Accessory structures shall not be permitted in overnight parks on travel trailer or RV spaces.

3. The location of mobile homes on travel trailer or RV spaces shall be prohibited.

4. The minimum distance between a travel trailer and any building in the same travel trailer park shall be **ten feet**. The minimum distance between a RV and any building in the same travel trailer park shall be **ten feet**.

5. Each travel trailer or RV space shall set back from lot lines in common with street lines a distance of not less than **20 feet** and from all other lot lines a distance of not less than **ten feet**.

6. The front yard and street side yard areas shall be landscaped in accordance with a landscape and irrigation plan approved by the zoning inspector. When a fence of less than **six feet** is proposed, the landscape plan shall include adequate trees to provide screening of the park.

7. The travel trailer or RV park shall be screened from surrounding lots by a solid fence or wall of not less than **three and one half feet** or more than **six feet** in height when located in a front yard or street side yard and by a solid fence or wall **six feet** in height when located in any other yard. Screen walls shall be located on the interior edge of the required front and street side yard areas.

8. The height, yard, and intensity of use regulations of the **C-2 Zoning District** shall apply to buildings located in travel trailer or RV parks.

9. Service buildings to house toilet, bathing and other sanitation facilities and utilities shall be provided as required by the Maricopa County Health Code. Said facilities, if required, shall be completed prior to use of the park.

10. Minimum distances or setbacks required herein shall be the shortest of horizontal dimensions measured from the nearest portion of the sidewall of a travel trailer or RV including pullouts, tip-outs, or portable affixed awnings.

11. Destination park/spaces shall require the issuance of a building permit prior to the use of the park/space by a travel trailer or RV.

1301.1.30. Warehouses, mini.

1301.1.31. Zoos, including the keeping of wild or exotic animals on a private or commercial basis.

1301.1.32. Single and multiple-family dwellings in **C-1, C-2** and **C-3 Zoning Districts** subject to establishing the need and compatibility of the residential use within the commercial zoning districts.

1301.1.33. Residential facilities, public or private, which provide group or individual living quarters which may provide skilled health care or welfare supervision, common food preparation or dining facilities and other living support activities, including but not limited to the following uses: Intermediate care, homes for the aged or handicapped, nursing homes, convalescent homes, rest homes, or similar facilities.[**7]

1301.1.34. Home occupations, cottage industry in Rural Zoning Districts subject to the following requirements: [*8]

1. The entrepreneur of the cottage industry shall reside in the dwelling unit in which the business operates.

2. The number of persons who are employed in connections with the occupants, but who are non-residents of the dwelling, shall not exceed **three**.

3. The cottage industry may be conducted either within the dwelling or an accessory structure, or both. Not more than **50%** of the combined floor area of the dwelling and any accessory structure(s) shall be used in the conduct of the cottage industry. The square footage of the cottage industry shall not exceed the square footage of the dwelling. [*17]

4. Only **one** sign for the cottage industry may be permitted. Such sign shall not exceed **16 square feet** in area. Such sign shall be nonilluminated. Such sign may be placed flat against the wall of a building or such sign may be a freestanding monument sign, but the height of such sign shall not exceed **12 feet** for a wall sign and **six feet** for a monument sign.

5. The business shall be conducted in an enclosed building, and any commercial vehicle used in conjunction with the cottage industry conducted on the lot shall be limited to **one** and shall be parked within an enclosed building when not in use.

6. Adequate off-street parking shall be provided in accordance with the standards of Chapter 11, Section 1102. herein (including design and paving of parking areas), and the maximum number of parking spaces permitted shall be **six**.

7. The outdoor storage of materials shall be limited to a maximum of **25%** of total lot area and shall not be located within any required front or street side yard. Any outdoor storage shall be completely fenced with a solid masonry wall to obstruct the view to a height equal to the elevation of the tallest

materials to be stored with a maximum height of stored materials of **eight feet**.

8. Any property for which a Special Use for a cottage industry is approved shall front on and have direct access to a paved road accepted for maintenance by the County Highway Department or other governmental agency.

9. Any outdoor lighting on a property approved for a cottage industry use shall be directed on site and shall conform to the shielding requirements for outdoor lighting as specific in Chapter 11, Section 1112. herein.

10. A Cottage Industry Special Use Permit issued to **one** person shall not be transferable to any other person; is not attached to the land; and is not transferable from one place of residence to another.

11. Direct sales of products from display shelves or racks is allowed provided such sales are specifically approved as part of the Special Use. However, a customer may pick up an order previously made by telephone or at a sales meeting.

12. The cottage industry shall not interfere with the delivery of utilities or other services to the area.

13. The business shall not generate any noise, vibration, smoke, dust, odors, heat, glare, or electrical interference with radio or television transmission in the area that would exceed that normally produced by a dwelling unit in a zoning district used solely for residential purposes.

14. The owner or operator of a cottage industry shall obtain a cottage industry permit from the Zoning Inspector prior to initiating business activity on the premises.

15. There shall be no variance or waiver from these requirements except by unanimous vote of all members of the Board of Supervisors.

16. The recommendation of the Commission may consist of additional reasonable requirements including but not limited to the following:

    a. The number of customers or students visiting the site.

    b. The hours of operation.

    c. Deliveries to the site.

d. The types of materials used in the business.

e. The types and amounts of materials, products and services sold by the business.

f. The types and amounts of materials manufactured by the business.

g. The types, amounts and locations of materials stored for use by the business.

h. The types and sizes of vehicles used in the business.

1301.1.35. Wireless Communication facilities or structures or towers which exceed the development standards specified in Chapter 12, Section 1202. of this Ordinance, or which have not been able to obtain administrative approval from the Director, the standards for which are also specified in Chapter 12, Section 1202. The location and height of the facility or structure or tower shall be indicated on the application for Special Use Permit approval. In a Residential or Rural Zoning District, the applicant must demonstrate that it has made substantial efforts to locate the use in an appropriate nonresidential zone. *10

1301.1.36. Real Estate Offices, Construction Administration Offices, and Homeowners Association Offices located within and only serving a Development Master Plan Community provided that: **13

1. The approved Development Master Plan establishes the location of these uses, designates the type of permanent reuse to be allowed, and establishes general layout for the proposed uses.

2. All structures shall meet all building code requirements for the appropriate commercial category of construction.

3. Upon cessation of the need for the use (**95% buildout**), cessation of the use, violation of conditions established by the Development Master Plan and/or Special Use Permit, or expiration of a time limit established under the approval of a Special Use Permit, all transitional structures, uses and modifications shall be removed to bring the property into compliance with its permanent use.

1301.1.37. Residential use (including use of a mobile home) when proposed in conjunction with another authorized Special Use.*14

1301.1.38. **One** mobile home or manufactured home per vacant lot of record in a rural zoning district, subject to the following standards:*15

1. The mobile home or manufactured home shall be oriented on a lot or parcel so that the wide side of the mobile home or manufactured home faces the front lot line, except on a lot or parcel where such an orientation would not meet side yard width requirements at every location between the front and rear setback lines.

2. The mobile home or manufactured home shall be permanently attached to a permanent foundation on a lot or parcel.

1301.1.39. Amateur radio antennas and amateur radio support structures.*19

1301.1.40. Large animal (horse, cattle and other farm animal) medical clinics and surgical referral hospitals, subject to the following standards:*20

1. Animals shall not be boarded or lodged except for short periods of observation incidental to care or treatment.

2. Any building or corral for the keeping of animals shall maintain a minimum setback of **40 feet** from any property line.

3. All refuse and animal wastes shall be stored within an enclosed building or within odor-proof closed containers.

1301.1.41. Signs for off-site advertising or for directing attention to a business, profession, commodity, service or entertainment conducted, sold, or offered elsewhere than upon the same premises (billboards) provided that:*22

1. The sign is relocated from a parcel of property that is acquired by a public entity for public use by condemnation, purchase or dedication.

2. The sign must be removed due to that governmental action.

3. The public entity has not paid just compensation for the sign.

4. The standards of the **C-2 Zoning District** shall apply, except that the sign shall be permitted to remain the same size and height as the original sign.

5. The standards of the **C-2 Zoning District** shall apply, except as noted above. No further variance to the C-2 standards may be granted by either the Board of Supervisors or the Board of Adjustment.

6. Billboards may not locate in residential zoning districts; however, they may locate in rural zoning districts.

1301.1.42. Private and charter schools on lots more than **one acre**.[*25]

ARTICLE 1301.2. SUBMITTALS: Before permitting any of the above uses, plans together with a supporting statement as to the proposed use of the buildings, structures and premises, shall be submitted to the Board of Supervisors. These plans and supporting statement shall be referred to the Commission for its review, report, and recommendation and for public hearing. Notice and procedure for public hearing shall conform to the procedures prescribed in Chapter 3, Section 304. thereof.

ARTICLE 1301.3. REPORT TO BOARD OF SUPERVISORS: The Commission having held public hearing shall then present its report and recommendation and the plans, together with the supporting statement to the Board of Supervisors for consideration and public hearing. Notice and procedure for public hearing shall conform to the procedures prescribed in Chapter 3, Section 304. thereof.

ARTICLE 1301.4. RECOMMENDATION: The recommendation of the Commission shall include its reasons for approval or disapproval of such plans and a supporting statement, and if recommended for approval, specific evidence and facts showing that the public health, safety and general welfare will not be adversely affected, that ample off-street parking facilities will be provided and that necessary safeguards will be provided for the protection of adjacent property or the permitted uses thereof.

ARTICLE 1301.5. VARIATIONS OF STANDARDS AND REQUIREMENTS: The recommendation of the Commission may include variations of the standards and requirements of the underlying zoning district including, but not limited to the following: [**13]

1301.5.1. Yards and open spaces.

1301.5.2. Fences and walls, or other screening.

1301.5.3. Parking areas, street improvements, including provision of service roads or alleys when practical and necessary, except for paving requirements unless it can be shown that the paving alternative will comply with the **Maricopa Association of Government's Particulate Plan for PM-10** by reducing particulate pollution.

1301.5.4. Regulation of points of vehicular ingress and egress.

1301.5.5. Regulation of signs.

1301.5.6. Landscaping and maintenance thereof.

1301.5.7. Maintenance of grounds.

1301.5.8. Control of noise, vibration, odor and other potentially dangerous or objectionable elements.

1301.5.9. Time limits may be imposed for the commencement of construction and/or review and further action by the Commission; and/or a time limit within which the Special Use shall cease to exist.

ARTICLE 1301.6. NONCONFORMING USE: Any use that the Board of Supervisors may permit as a Special Use, existing at the time this Ordinance or amendments thereto become effective, shall be considered a nonconforming use unless such use has been established as a Special Use as herein provided.

ARTICLE 1301.7. AMENDMENTS: Amendments shall be processed in the same manner as the initial plans and supporting statement of proposed use.

Date of Revisions					
*2	Revised 11-8-82	*10	Added 4-5-92	*24	Effective 11-19-99
*3	Revised 8-15-83	**13	Added 2-20-94		
*16	Added 2-5-95	*14	Added 5-6-94		
*11	Added 4-15-93	*15	Added 7-23-94		
*13	Revised 2-20-94	*19	Effective 1-17-98		
*5	Revised 1-7-85	*20	Effective 1-17-98		
*7	Added 4-7-86; Effective 1-1-88	*22	Effective 5-7-99		
*8	Added 9-12-90	*25	Deleted 11-19-99		
*17	Effective 5-9-97	*26	Effective 9-7-01		

SECTION 1302. TEMPORARY USE**1

The uses, buildings and structures permitted in this Section shall be established and maintained so as to provide minimum interference with the use and enjoyment of neighboring uses, buildings and structures and to ensure public health, safety and convenience. Temporary uses shall only be permitted as authorized within this Chapter.

ARTICLE 1302.1. PURPOSE:

1302.1.1. The provisions of this article are based on the recognition of buildings and structures which, because of their unique characteristics:

1. Should not be permitted on a permanent basis but which may be either necessary or desirable for a limited period of time, or

2. Requires careful regulation especially regarding location, duration of use and operation.

ARTICLE 1302.2. TEMPORARY USES: Temporary Uses shall be limited to the following:*2

1302.2.1. ***Temporary Housing:*** Temporary housing on the same lot of a permanent dwelling or use shall be authorized only in the following situations: The owner of the property is (re)constructing his own permanent dwelling on the property. This use shall be limited to a maximum time period of **two years** provided that the building permit for the permanent dwelling remains active.

1302.2.2. ***Temporary Event:*** Temporary events such as, but not limited to, circuses, carnivals, concerts, revivals, horse shows, rodeos, sales promotion events, and charity events. Any such event shall last no longer than a total of **30 days** within a **six-month period**. No continuations shall be approved. Any application submitted for such a use shall address the issues and satisfy the requirements identified in the Board of Supervisors Action dealing with temporary events on **December 15, 1980,** and as subsequently amended.

1302.2.3. ***Underage Occupancy:*** Temporary occupancy, by reason of exceptional or unusual family situation, of a dwelling unit located in the Senior Citizen Overlay Zoning District (Chapter 10, Section 1006.) by persons not in conformance with the age limitations of Chapter 10, Section 1006. This use shall be limited to a maximum time period of **two years**. This use shall only be permitted upon issuance of a Temporary Use Permit.

1302.2.4. ***Nonresidential Use of Mobile Home:*** Nonresidential use of a mobile home shall be limited to a maximum time period of **six years**. In rural and residential districts only permitted nonresidential uses as identified in each zoning district may apply for this type of temporary use. This use shall only be permitted upon issuance of a Temporary Use Permit. Mobile homes intended for nonresidential use shall include mobile homes used for quarters of on-duty personnel in connection with publicly or privately owned or operated fire stations or mobile homes used for the residence of a security guard in commercial and industrial zoning districts.

ARTICLE 1302.3. TEMPORARY USE PERMIT REGULATIONS: All Temporary Use Permits shall be subject to the following regulations:

1302.3.1. ***Application Requirements:***

1. Regulations identified for the zoning district in which the proposed Temporary Use is located shall apply. Any such regulation may be varied by the Board of Adjustment.

2. Application procedures and informational requirements for a Temporary Use Permit and its renewal shall be established by the zoning inspector. The application shall provide all information needed by the Board of Adjustment, should a written letter of opposition be filed.

3. Upon acceptance of a complete application for a new Temporary Use Permit, the subject property shall be posted with a "Notice of Application" for a **ten-day** period. If a written letter of opposition is received within the **ten-day** posting period, the request for a Temporary Use Permit shall be placed on the Agenda of the first available Board of Adjustment Meeting for Resolution and noticed in accordance with Chapter 3, Section 303., Article 303.6. If no written letter of opposition is received within the posting period, then a Temporary Use Permit may be approved by the zoning inspector.

1302.3.2. ***Approval of Temporary Use Permit:*** A Temporary Use Permit shall only be approved provided that:

1. The proposed use does not create adverse impacts on surrounding property or residents. The zoning inspector or the Board of Adjustment may only approve such a proposed use by stipulating additional requirements, provided that said stipulations substantially reduce all adverse impacts on surrounding property or residents.

2. The Temporary Use Permit shall be approved for a period of time not exceeding the authorized limits in Chapter 13, Section 1302, Article 1302.2. The time period for a Temporary Use Permit shall commence upon issuance of a Building Permit, its renewal date, or upon determination of the Board of Adjustment or zoning inspector.

3. In a rental lease situation, the Temporary Use Permit shall be approved for a time period not exceeding the duration of the lease, excluding options.

4. The permit for the Primary Use has been issued for any Temporary Use Permit requested under Chapter 13, Section 1302, Article 1302.2.1.

5. Upon approval, a Temporary Use Permit shall be issued to the applicant. This permit shall indicate the nature of the use approved, its expiration date, and must be on visible display by the applicant on the property. Failure to meet this display requirement shall result in revocation of the Temporary Use Permit if issued a Zoning Citation.

1302.3.3. ***Extension of Temporary Use Permit:*** The duration of a Temporary Use Permit shall only be extended by the Board of Adjustment. Upon application, the Board

may grant a one-time only extension of the duration of any Temporary Use Permit for up to **two years** (except a temporary event), provided that all other requirements for the Temporary Use Permit must be met and the applicant presents justification to the Board of unusual or exceptional circumstances not of the applicant's own creation. Further, any such request for extension must be applied for prior to expiration of the current Temporary Use Permit.

1302.3.4. ***Denial, Termination, or Expiration of Temporary Use Permit:*** Denial, termination or expiration of a Temporary Use Permit shall occur as follows:

1. Denial of a Temporary Use Permit by the zoning inspector, for a reason other than the Temporary Use Permit has or will exceed its authorized time frame (Chapter 13, Section 1302, Article 1302.2. or as extended by the Board of Adjustment under Chapter 13, Section 1303., Article 1303.2.3.) may be appealed to the Board of Adjustment upon submittal of an appropriate application and must be filed within **ten days** of any such decision by the zoning inspector. Any appeal by the applicant shall be placed on the Agenda of the first available Board of Adjustment Meeting for Resolution and noticed in accordance with the Board's procedures.

2. Any Temporary Use Permit remains in effect only as long as those conditions regarding the use of the property and control of the use (lease or ownership) remain as originally approved.

3. Upon denial, expiration, or termination of a Temporary Use Permit, the Temporary Use shall cease. Furthermore, any temporary or mobile structures shall be removed within **ten days** of said expiration or termination and any required physical alterations to principal or accessory buildings or structures should be issued permits within **ten days** and shall be completed and finalled within **30 days** of said expiration.

ARTICLE 1302.4. LOCATION OF TEMPORARY USES Temporary Uses shall be permitted in zoning districts as follows:

TEMPORARY USES:		**PERMITTED ZONING DISTRICTS:**
1302.4.1.	Temporary Housing	All Rural Zones
1302.4.2.	Temporary Event	All Rural and Residential Zones, C-S, C-2, C-3
1302.4.3.	Underage Occupancy	SC Overlay Zone

1302.4.4.	Non-residential Use of a Mobile Home	All Zones

Date of Revisions	
**1	Added 2-20-94
*2	Revise 5-6-94

SECTION 1303. CONDITIONAL USE

The uses, buildings and structures permitted in this Section shall be established and maintained so as to provide minimum interference with the use and enjoyment of neighboring uses, buildings and structures and to ensure public health, safety and convenience. Conditional uses shall only be permitted as authorized within this Section.

ARTICLE 1303.1. PURPOSE:

1203.1.1. The provisions of this article are based on the recognition of buildings and structures which, because of their unique characteristics:

1. Should not be permitted on a permanent basis but which may be either necessary or desirable for a limited period of time, or

2. Requires careful regulation especially regarding location, duration of use and operation.

ARTICLE 1303.2. CONDITIONAL USES: Conditional Uses shall be limited to the following:

1303.2.1. ***Caretaker(s) Quarters:*** An additional detached accessory dwelling unit for caretaker(s) quarters may be permitted, provided that all of the following conditions are met:

1. The additional dwelling unit may be a manufactured house, or a mobile home.

2. The justification for the caretaker shall not be merely those activities associated with the normal responsibilities of a resident to maintain his property, including the care of a limited number of farm animals. An unusual condition(s) must exist which requires the on-site residency of a caretaker to perform the duties identified. Said condition(s) shall be identified as part of the Conditional Use application. An unusual condition(s) may consist of:

a. Documented extended absences from the property by the occupant(s) of the principal residence.

b. Medical condition(s), when documented by a notarized statement from a physician. In the case of a medical caretaker, the caretaker or the recipient of the care may live in either the principal residence or the additional permitted residence (caretaker's quarters).

c. Other similar conditions as determined by the zoning inspector.

3. Upon sale of the property, cessation of the conditions requiring on-site residence of the caretaker, or termination of the Conditional Use Permit, the caretaker's quarters (additional unit) are to be removed.

1303.2.2. ***Model Home Sales Office Complex:*** Model home sales complex and/or office provided that the following conditions are met:

1. The uses are only associated with the developer/owner and subdivision or project in which they are located.

2. Upon sale of the development, cessation of the need for the use (**95% buildout**), cessation of the use, or termination of the Conditional Use Permit, all structures, modifications to structures and uses related to the Conditional Use are removed.

3. Allowed uses may be located in a mobile home.

4. Those uses of structures which may be approved for Conditional Use shall meet all Building Code requirements for the appropriate commercial category of construction.

5. Every fifth consecutive status report for continuance of a Conditional Use Permit for this use shall be reviewed by the Board of Adjustment at a public hearing to determine continued compliance with required conditions.

6. A **six-foot** temporary, open, security fence may be provided for model home complexes.

1303.2.3. ***Construction Office/Yard Complex:*** Construction yard and construction office complex which may include a security office or residence for a security guard provided that the following conditions are met:

1. The uses are only associated with the developer/owner and subdivision or project in which they are located.

2. Upon sale of the development, cessation of the need for the use (**95% buildout**), cessation of the use, or termination of the Conditional Use Permit, all structures, modifications to structures and uses related to the Conditional Use are removed.

3. Those allowed uses may be located in a mobile home.

4. Those uses of structures which may be approved for Conditional Use shall meet all Building Code requirements for the appropriate commercial category of construction.

5. Every fifth consecutive status report for continuance of a Conditional Use Permit for this use shall be reviewed by the Board of Adjustment at a public hearing to determine continued compliance with required conditions.

6. A **six-foot** solid screen fence shall be provided around the perimeter of any construction yard site and no outdoor storage of materials above the height of the solid screen fence shall be permitted.

1303.2.4. ***Temporary Seasonal Sales:*** Temporary seasonal sales operations provided that the following conditions are met:

1. Any such Conditional Use shall be limited to **30 days** and shall not be renewed. Conditional Use Permits for this type of use shall be permitted not more than four times during any calendar year.

2. The site shall be cleared of all indications that such a use occurred within **ten days** of the termination of the Conditional Use Permit.

3. The parking requirements of Chapter 11, Section 1102. shall not apply to this use. However, approved access and adequate safe parking shall be required.

4. An annual status report is not required.

ARTICLE 1303.3. CONDITIONAL USE PERMIT REGULATIONS: All Conditional Use Permits identified in this Section shall be subject to the following regulations:

1303.3.1. A Conditional Use shall be subject to all regulations of the Zoning District within which it is located, unless specifically exempted in Chapter 13, Section 1303, Article 1303.2.

1303.3.2. Conditional Uses shall only be permitted upon application for and approval of a Conditional Use Permit. Application requirements shall be determined by the zoning inspector.

1303.3.3. Submission of an annual status report, unless specifically exempted in Chapter 13, Section 1303, Article 1303.2. Failure to submit a required status report (including fee), shall be considered as a notification by the applicant of the discontinuance of the need for the Conditional Use and shall be grounds for revocation of the Conditional Use Permit. Upon failure to meet any required conditions, the zoning inspector shall revoke the Conditional Use Permit.

1303.3.4. Only **one** additional dwelling unit shall be permitted on any property by approval of a Conditional Use.

1303.3.5. Upon approval of a Conditional Use, a Conditional Use Permit shall be issued to the applicant by the zoning inspector. This permit shall indicate the use approved as well as the date that the annual status report is due.

ARTICLE 1303.4 LOCATION OF CONDITIONAL USES: Conditional Uses shall be permitted in zoning districts as follows:

CONDITIONAL USES:		PERMITTED ZONING DISTRICTS:
1303.4.1.	Caretaker's Quarters	All Rural Zones
1303.4.2.	Model Home Sales/ Office Complex	All Rural and Residential Zones
1303.4.3.	Construction Office/ Yard Complex	All Zones
1303.4.4.	Temporary Seasonal Sales	All Rural Zones, C-S, C-1, C-2, C-3

SECTION 1304. EXEMPTED USES

This Ordinance shall not prevent, restrict or otherwise regulate the use or occupation of land or improvements for railroad, mining, metallurgical, grazing or general agricultural purposes, if the tract/s concerned is/are **five** or **more contiguous commercial acres** in size (**Note: One Commercial acre = 35,000 square feet**). *1, *22

ARTICLE 1304.1. Property is not exempt from the Maricopa County Zoning Ordinance and/or Building Safety Ordinance unless and until the Maricopa Planning and Development Department has issued a certificate of exemption for

that property. In order to secure a certificate of exemption, an applicant shall submit a zoning clearance application, including site plan and other reasonable supporting documentation.*32

ARTICLE 1304.2. Only property classified by the Maricopa County Assessor's office or the Arizona Department of Revenue as property used for one of the purposes enumerated in the first paragraph of this Section is eligible for exemption under this section. If property has been so classified, the property is exempt from the Maricopa County Zoning Ordinance and/or Building Safety Ordinance, unless the Planning and Development Director independently determines that all or part of the property is not used primarily for one or more of the purposes enumerated in the first paragraph of this section.*32

ARTICLE 1304.3. Any structures built under an exemption that do not meet the underlying zoning district and/or Building Safety Ordinance standards may be required to comply with said standards if, at a future date, the exemption is no longer applicable.*31

Date of Revisions			
*1	Revised 7-17-72	*31	Effective 11-19-99
*22	Revised 2-20-94	*32	Effective 2-4-00

SECTION 1305. NONCONFORMING USES

ARTICLE 1305.1. CONTINUING EXISTING USES: Any use of land, building or structure, lawfully existing at the time this Ordinance or amendments thereto become effective, may be continued even though such use does not conform with the regulations of this Ordinance or amendments thereto for the zoning district in which it is located.

ARTICLE 1305.2. DISCONTINUANCE OF NONCONFORMING USES:

1305.2.1. In the event that a nonconforming use of land, building or structure is discontinued for a period of **12 consecutive months**, any future use thereof shall be in conformity with the regulations of this Ordinance.

1305.2.2. In the event that a nonconforming use of land, building or structure is destroyed by fire, explosion, act of God or act of the public enemy to the extent of **75%** of its value, according to the appraisal thereof by competent appraisers, then and without further action by the Board of Supervisors, the future use thereof shall from and after the date of such destruction, be subject to all the regulations of this Ordinance or amendments thereto for the zoning district in which such future use is located.

ARTICLE 1305.3. EXPANSION OF A NONCONFORMING USE: A nonconforming use of land, building or structure shall not be enlarged, extended, reconstructed or structurally altered unless such enlargement, extension, reconstruction or structural alternation and further use of such property conform with the regulations of this Ordinance for the zoning district in which such property is located, except that a nonconforming business use may expand if such expansion does not exceed **100%** of the floor area of the original business.

ARTICLE 1305.4. CHANGE OF NONCONFORMING USE: If no structural alterations are made, any nonconforming use of land, building or structure may be changed to another nonconforming use provided the proposed use is of the same or more restricted classification as evidenced by a finding and resolution of record by the Board of Adjustment having jurisdiction.

SECTION 1401. RURAL-190, RURAL-70 & RURAL-43
(Rural Zoning Districts)

ARTICLE 1401.1. SIGNS IDENTIFYING THE NAME OF THE OCCUPANT OF A RESIDENCE, THE OCCUPANT'S PROFESSION OR TITLE, AND THE ADDRESS OF THE DWELLING, SUBJECT TO THE FOLLOWING:

1401.1.1. Such sign shall not exceed **two square feet** in area.

1401.1.2. Such sign may be illuminated but the source of illumination shall not be visible, and no flashing or intermittent illumination shall be employed.

1401.1.3. Such sign shall be placed flat against a wall of a building, but placement against a wall of a building shall be no higher than **eight feet** above grade.

1401.1.4. Such sign shall be located on the property to which it pertains and the number shall be limited to **one for each dwelling**.

ARTICLE 1401.2. SIGNS IDENTIFYING CHURCHES, SCHOOLS, PUBLIC UTILITY BUILDINGS AND FACILITIES, PUBLICLY OWNED OR OPERATED PROPERTIES, LIBRARIES, MUSEUMS, COMMUNITY BUILDINGS AND ROADSIDE STANDS, SUBJECT TO THE FOLLOWING: *5

1401.2.1. Such sign shall not exceed **24 square feet** in area.

1401.2.2. Such sign may be illuminated but the source of illumination shall not be visible, and no flashing or intermittent illumination shall be employed.

1401.2.3. Such sign may be placed flat against a wall of a building or such sign may be freestanding, but placement against a wall of a building shall be no higher than **12 feet** above grade nor above the roofline. The height of a freestanding sign shall not exceed **12 feet** above grade.

1401.2.4. Such sign shall not be located in or project into any required yard, and placement of such sign when freestanding shall be parallel with the street.

1401.2.5. Such sign shall contain no advertising copy.

1401.2.6. Such sign shall be located on the property to which it pertains and the number shall be limited to **one for each** such school, public utility building or facility, publicly owned or operated property, library, museum, community building or roadside stand. *5

ARTICLE 1401.3. SIGNS IDENTIFYING PUBLIC AND PRIVATE FORESTS, WILDLIFE RESERVATIONS, GOLF COURSES, PARKS, PLAYGROUNDS, SUBJECT TO THE FOLLOWING: *5

1401.3.1. Such sign shall not exceed **24 square** feet in area.

1401.3.2. Such sign may be double-faced.

1401.3.3. Such sign may be illuminated but the source of illumination shall not be visible, and no flashing or intermittent illumination shall be employed.

1401.3.4. Such sign may be placed flat against a wall of a building or such sign may be freestanding, but placement against a wall of a building shall be no higher than **12 feet** above grade nor above the roofline. The height of a freestanding sign shall not exceed **12 feet** above grade.

1401.3.5. Such sign may be located in or project into required yards but such sign shall not be located in or project into any street or alley.

1401.3.6. Such sign shall contain no advertising copy.

1401.3.7. Such sign shall be located on the property to which it pertains and the number shall be limited to **one for each** entrance to such public or private forest, wildlife reservation, golf course, park, playground. *5

ARTICLE 1401.4. PERMANENT DIRECTIONAL SIGNS, SUBJECT TO THE FOLLOWING:

1401.4.1. Such sign shall not exceed **two square feet** in area.

1401.4.2. Such sign may be double-faced.

1401.4.3. Such sign may be illuminated but the source of illumination shall not be visible, and no flashing or intermittent illumination shall be employed.

1401.4.4. Such sign may be placed flat against a wall of a building or such sign may be freestanding but placement against a wall of a building shall be no higher than **eight feet** above grade. The height of a freestanding sign shall not exceed **12 feet** above grade.

1401.4.5. Such sign may be located in or project into required yards but such sign shall not be located in or project into any street or alley.

1301.4.6. Such sign may be used to designate entrances or exits to or from a parking area if necessary for that purpose, but the number shall be limited to **one for each** such entrance or exit.

1401.4.7. Such sign shall contain no advertising copy.

ARTICLE 1401.5. TEMPORARY DIRECTIONAL SIGNS, SUBJECT TO THE FOLLOWING:

1401.5.1. Such sign shall not exceed **12 square feet** in area.

1401.5.2. Such sign may be double-faced.

1401.5.3. Such sign shall not be illuminated.

1401.5.4. Such sign may be placed flat against a wall of a building or such sign may be freestanding, but placement against a wall of a building shall be no higher than **eight feet** above grade. The height of a freestanding sign shall not exceed **12 feet** above grade.

1401.5.5. Such sign may be located in or project into required yards but such sign shall not be located in or project into any street or alley.

1401.5.6. Such sign shall contain no advertising copy.

1401.5.7. Such sign shall be removed from the property within **10 days** after the purpose of the sign is fulfilled.

ARTICLE 1401.6. TEMPORARY SIGNS PERTAINING TO THE SALE, LEASE, HIRE OR RENTAL OF PROPERTY, SUBJECT TO THE FOLLOWING:

1401.6.1. Such sign shall not exceed **12 square feet** in area.

1401.6.2. Such sign may be double-faced.

1401.6.3. Such sign shall not be illuminated.

1401.6.4. Such sign may be placed flat against a wall of a building or such sign may be freestanding, but placement against a wall of a building shall be no higher than **12 feet** above grade nor above the roofline. The height of a freestanding sign shall not exceed **12 feet** above grade.

1401.6.5. Such sign may be located in or project into required yards but such sign shall not be located in or project into any street or alley.

1401.6.6. Such sign shall not be moving, animated or audible in any manner.

1401.6.7. Such sign shall be located on the property to which it pertains and the number shall be limited to **one for each such property**.

1401.6.8. Such sign shall be removed from the property within **ten days** after the purpose of the sign is fulfilled.

ARTICLE 1401.7. TEMPORARY FREESTANDING SIGNS PERTAINING TO THE SUBDIVISION OR DEVELOPMENT OF LAND, SUBJECT TO THE FOLLOWING:

1401.7.1. Such sign shall not exceed **150 square feet** in area; and where there is more than **one** of these signs located on the property, the aggregate sign area shall not exceed **150 square feet**.

1401.7.2. Such sign may be double-faced.

1401.7.3. Such sign shall not be illuminated.

1401.7.4. Such sign shall not exceed **12 feet** in height.

1401.7.5. Such sign shall not be located in or project into any required yard.

1401.7.6. Such sign shall not be moving, animated or audible in any manner.

1401.7.7. Such sign shall be located on the property to which it pertains and the number shall be limited to **four for each such property**.

1401.7.8. Such sign shall be removed from the property within **ten days** after the purpose of the sign is fulfilled.

ARTICLE 1401.8. TEMPORARY SIGNS IDENTIFYING THE CONTRACTORS AND SUBCONTRACTORS, IF ANY, ENGAGED IN THE CONSTRUCTION OR REPAIR OF A BUILDING OR BUILDINGS, SUBJECT TO THE FOLLOWING: [*5]

1401.8.1. Such sign shall not exceed **24 square feet** in area.

1401.8.2. Such sign may be double-faced.

1401.8.3. Such sign shall not be illuminated.

1401.8.4. Such sign may be placed flat against a wall of a building or such sign may be freestanding, but placement against a wall of a building shall be no higher than **12 feet** above grade nor above the roofline. The height of a freestanding sign shall not exceed **12 feet** above grade.

1401.8.5. Such sign may be located in or project into required yards but such sign shall not be located in or project into any street or alley.

1401.8.6. Such sign shall contain no advertising copy.

1401.8.7. Such sign shall be located on the property to which it pertains and the number shall be limited to **one for each** such property.

1401.8.8. Such sign shall be removed from the property within **ten days** after the work of contractors or subcontractors identified thereon is completed, whichever occurs first. *5

ARTICLE 1401.9. SIGNS IDENTIFYING SUBDIVISIONS SUBJECT TO THE FOLLOWING: *14

1401.9.1. The base of the sign must be equal to or greater than **half the width** of the sign.

1401.9.2. Maximum sign area of **32 square feet**.

1401.9.3. The sign must allow clear unobstructed vision at corners of streets and at driveway entrances/exits to the property. The sign must be placed in accordance with Chapter 11, Section 1111, Article 1111.4. located herein as it applied to corners of intersection streets and at driveway entrances/exits to streets, and the sign shall not be located in a median or within the right-of-way.

1401.9.4. The signs may be indirectly illuminated in accordance with Chapter 11, Section 1112. located herein.

1401.9.5. These signs shall only be located at entry points to the subdivision.

1401.9.6. The maximum height shall be **six feet**.

Date of Revisions			
*5	Revised 11-8-82	*14	Added 6-5-96

SECTION 1402. R1-35, R1-18, R1-10, R1-8, R1-7, R1-6 (Single-Family Residential Zoning Districts) and R-2 (Limited Multiple-Family Residential Zoning District)

ARTICLE 1402.1. SIGNS IDENTIFYING THE NAME OF THE OCCUPANT OF A RESIDENCE, THE OCCUPANT'S PROFESSION OR TITLE, AND THE ADDRESS OF THE DWELLING, SUBJECT TO THE FOLLOWING:

1402.1.1. Such sign shall not exceed **two square feet** in area.

1402.1.2. Such sign may be illuminated but the source of illumination shall not be visible, and no flashing or intermittent illumination shall be employed.

1402.1.3. Such sign shall be placed flat against a wall of a building, but placement against a wall of a building shall be no higher than **eight feet** above grade.

1402.1.4. Such sign shall be located on the property to which it pertains and the number shall be limited to **one for each dwelling**.

ARTICLE 1402.2. SIGNS IDENTIFYING CHURCHES, SCHOOLS, PUBLIC UTILITY BUILDINGS AND FACILITIES, PUBLICLY OWNED OR OPERATED PROPERTIES, LIBRARIES, MUSEUMS AND COMMUNITY BUILDINGS, SUBJECT TO THE FOLLOWING:

1402.2.1. Such sign shall not exceed **24 square feet** in area.

1402.2.2. Such sign may be illuminated but the source of illumination shall not be visible, and no flashing or intermittent illumination shall be employed.

1402.2.3. Such sign may be placed flat against a wall of a building or such sign may be freestanding, but placement against a wall of a building shall be no higher than **12 feet** above grade nor above the roofline. The height of a freestanding sign shall not exceed **12 feet** above grade.

1402.2.4. Such sign shall not be located in or project into any required yard, and placement of such sign when freestanding shall be parallel with the street.

1402.2.5. Such sign shall contain no advertising copy.

1402.2.6. Such sign shall be located on the property to which it pertains and the number shall be limited to **one for each** such church, school, public building or facility, publicly owned or operated property, library, museum or community building.

ARTICLE 1402.3. SIGNS IDENTIFYING PARKS AND PLAYGROUNDS SUBJECT TO THE FOLLOWING: *6

1402.3.1. Such sign shall not exceed **24 square feet** in area.

1402.3.2. Such sign may be double-faced.

1402.3.3. Such sign may be illuminated but the source of illumination shall not be visible, and no flashing or intermittent illumination shall be employed.

1402.3.4. Such sign may be placed flat against a wall of a building or such sign may be freestanding, but placement against a wall of a building shall be no higher than **12 feet** above grade nor above the roofline. The height of a freestanding sign shall not exceed **12 feet** above grade.

1402.3.5. Such sign may be located in or project into required yards but such sign shall not be located in or project into any street or alley.

1402.3.6. Such sign shall contain no advertising copy.

1402.3.7. Such sign shall be located on the property to which it pertains and the number shall be limited to **one for each** entrance to such golf course, park or playground. *6

ARTICLE 1402.4. PERMANENT DIRECTIONAL SIGNS, SUBJECT TO THE FOLLOWING:

1402.4.1. Such sign shall not exceed **two square feet** in area.

1402.4.2. Such sign may be double-faced.

1402.4.3. Such sign may be illuminated but the source of illumination shall not be visible, and no flashing or intermittent illumination shall be employed.

1402.4.4. Such sign may be placed flat against a wall of a building or such sign may be freestanding, but placement against a wall of a building shall be no higher than **eight feet** above grade. The height of a freestanding sign shall not exceed **12 feet** above grade.

1402.4.5. Such sign may be located in or project into required yards but such sign shall not be located in or project into any street or alley.

1402.4.6. Such sign may be used to designate entrances or exits to or from a parking area if necessary for that purpose, but the number shall be limited to **one for each** such entrance or exit.

1402.4.7. Such sign shall contain no advertising copy.

ARTICLE 1402.5. TEMPORARY DIRECTIONAL SIGNS, SUBJECT TO THE FOLLOWING:

1402.5.1. Such sign shall not exceed **12 square feet** in area.

1402.5.2. Such sign may be double-faced.

1402.5.3. Such sign shall not be illuminated.

1402.5.4. Such sign may be placed flat against a wall of a building or such sign may be freestanding, but placement against a wall of a building shall be no higher than **eight feet** above grade. The height of a freestanding sign shall not exceed **12 feet** above grade.

1402.5.5. Such sign may be located in or project into required yards but such sign shall not be located in or project into any street or alley.

1402.5.6. Such sign shall contain no advertising copy.

1402.5.7. Such sign shall be removed from the property within **ten days** after the purpose of the sign is fulfilled.

ARTICLE 1402.6. TEMPORARY SIGNS PERTAINING TO THE SALE, LEASE, HIRE OR RENTAL OF PROPERTY, SUBJECT TO THE FOLLOWING:

1402.6.1. Such sign shall not exceed **12 square feet** in area.

1402.6.2. Such sign may be double-faced.

1402.6.3. Such sign shall not be illuminated.

1402.6.4. Such sign may be placed flat against a wall of a building or such sign may be freestanding, but placement against a wall of a building shall be no higher than **12 feet** above grade nor above the roofline. The height of a freestanding sign shall not exceed **12 feet** above grade.

1402.6.5. Such sign may be located in or project into required yards, but such sign shall not be located in or project into any street or alley.

1402.6.6. Such sign shall not be moving, animated or audible in any manner.

1402.6.7. Such sign shall be located on the property to which it pertains and the number shall be limited to **one for each** such property.

1402.6.8. Such sign shall be removed from the property within **ten days** after the purpose of the sign is fulfilled.

ARTICLE 1402.7. TEMPORARY FREESTANDING SIGNS PERTAINING TO THE SUBDIVISION OR DEVELOPMENT OF LAND, SUBJECT TO THE FOLLOWING:

1402.7.1. Such sign shall not exceed **400 square feet** in area; and where there is more than **one** of these signs located on the property, the aggregate sign area shall not exceed **1,000 square feet**.

1402.7.2. Such sign may be double-faced.

1402.7.3. Such sign shall not be illuminated.

1402.7.4. Such sign shall not exceed **24 feet** in height.

1402.7.5. Such sign shall not be located in or project into any required yard.

1402.7.6. Such sign shall not be moving, animated or audible in any manner.

1402.7.7. Such sign shall be located on the property to which it pertains and the number shall be limited to **ten for each such property**.

1402.7.8. Such sign shall be removed from the property within **ten days** after the purpose of the sign is fulfilled.

ARTICLE 1402.8. TEMPORARY SIGNS IDENTIFYING THE CONTRACTORS AND SUBCONTRACTORS, IF ANY, ENGAGED IN THE CONSTRUCTION OR REPAIR OF A BUILDING OR BUILDINGS, SUBJECT TO THE FOLLOWING: *6

1402.8.1. Such sign shall not exceed **24 square feet** in area.

1402.8.2. Such sign may be double-faced.

1402.8.3. Such sign shall not be illuminated.

1402.8.4. Such sign may be placed flat against a wall of a building or such sign may be freestanding, but placement against a wall of a building shall be no higher than **12 feet** above grade nor above the roofline. The height of a freestanding sign shall not exceed **12 feet** above grade.

1402.8.5. Such sign may be located in or project into required yards, but such sign shall not be located in or project into any street or alley.

1402.8.6. Such sign shall contain no advertising copy.

1402.8.7. Such sign shall be located on the property to which it pertains and the number shall be limited to **one for each property**.

1402.8.8. Such sign shall be removed from the property within **ten days** after the work of contractors or subcontractors identified thereon is completed, whichever occurs first. *6

ARTICLE 1402.9. SIGNS IDENTIFYING SUBDIVISIONS SUBJECT TO THE FOLLOWING: *16

1402.9.1. The base of the sign must be equal to or greater than **half the width** of the sign.

1402.9.2. Maximum sign area of **32 square feet**.

1402.9.3. The sign must allow clear unobstructed vision at corners of streets and at driveway entrances/exits to the property. The sign must be placed in accordance with Chapter 11, Section 1111.4. located herein as it applied to corners of intersection streets and at driveway entrances/exists to streets, and the sign shall not be located in a median or within the right-of-way.

1402.9.4. The signs may be indirectly illuminated in accordance with Chapter 11, Section 1112. located herein.

1402.9.5. These signs shall only be located at entry points to the subdivision.

1402.9.6. The maximum height shall be **six feet**.

Date of Revisions			
*6	Revised 11-8-82	*16	Added 6-5-96

SECTION 1403. R-3, R-4, R-5
(Multiple-Family Residential Zoning Districts)

ARTICLE 1403.1. SIGNS AS PERMITTED IN THE "R1-35" SINGLE-FAMILY RESIDENTIAL ZONING DISTRICT AND THE FOLLOWING: *3

ARTICLE 1403.2. SIGNS IDENTIFYING MULTI-FAMILY OR APARTMENT DEVELOPMENTS, FRATERNITY AND SORORITY HOUSES, ORPHANAGES, INTERMEDIATE CARE FACILITIES, REST HOMES, NURSING HOMES, CONVENTS, HOSPITALS, INSTITUTIONS OF AN EDUCATIONAL, RELIGIOUS, CHARITABLE, OR PHILANTHROPIC NATURE, PRIVATE CLUBS, FRATERNAL ORGANIZATIONS AND RESORT HOTELS SUBJECT TO THE FOLLOWING:

1403.2.1. Such sign shall not exceed **24 square feet** in area.

1403.2.2. Such sign may be double-faced.

1403.2.3. Such sign may be illuminated and shall meet provisions of Chapter 11, Section 1112. (Outdoor Lighting Provisions) as listed herein.

1403.2.4. Such sign may be placed flat against a wall of a building or may be freestanding, but placement against a wall of a building shall be no higher than **12 feet** above grade and shall not extend above the roofline. The height of a freestanding sign shall not exceed **12 feet** above grade.

1403.2.5. Such sign may be located in or project into required yards but such sign shall not be located in or project into any street, alley or any ultimate right-of-way setback line area.

1403.2.6. Such sign shall contain no advertising copy.

1403.2.7. Such sign shall be located on the property to which it pertains, and the number shall be limited to **one for each** street frontage on which any of the above uses has a major access entrance.

ARTICLE 1403.3. TEMPORARY SIGNS PERTAINING TO THE SALE, LEASE, HIRE OR RENTAL OF PROPERTY, SUBJECT TO THE FOLLOWING: *3

1403.3.1. Such signs shall not exceed **24 square feet** in area.

1403.3.2. Such sign may be double-faced.

1403.3.3. Such sign shall not be illuminated.

1403.3.4. Such sign may be placed flat against a wall of a building or such sign may be freestanding, but placement against a wall of a building shall be no higher than **12 feet** above grade nor above the roofline. The height of a freestanding sign shall not exceed **12 feet** above grade.

1403.3.5. Such sign may be located in or project into required yards but such sign shall not be located in or project into any street or alley or any ultimate right-of-way setback line area.

1403.3.6. Such sign shall not be moving, animated or audible in any manner.

1403.3.7 Such sign shall be located on the property to which it pertains and the number shall be limited to **one for each** street frontage on which such property has a major access entrance.

1403.3.8. Such sign shall be removed from the property within **ten days** after the purpose of the sign is fulfilled.

ARTICLE 1403.4. TEMPORARY SIGNS IDENTIFYING THE CONTRACTORS AND SUBCONTRACTORS, AND OTHER SIMILAR INTERESTS, IF ANY, ENGAGED IN THE CONSTRUCTION OR REPAIR OF A BUILDING OR BUILDINGS, SUBJECT TO THE FOLLOWING:

1403.4.1. Such sign shall not exceed **50 square feet** in area.

1403.4.2. Such sign may be double-faced.

1403.4.3. Such sign shall not be illuminated.

1403.4.4. Such sign may be placed flat against a wall of a building or such sign may be freestanding, but placement against a wall of a building shall be no higher than **12 feet** above grade nor above the roofline. The height of a freestanding sign shall not exceed **12 feet** above grade.

1403.4.5. Such sign may be located in or project into required yards but such sign shall not be located in or project into any street or alley or any ultimate right-or-way setback line area.

1403.4.6. Such sign shall contain no advertising copy.

1403.4.7. Such sign shall be located on the property to which it pertains and the number shall be limited to **one for each** street frontage on which such property has a major access entrance.

1403.4.8. Such sign shall be removed from the property within **ten days** after the work of contractors or subcontractors, or other similar interests identified thereon is completed, whichever occurs first.

Date of Revisions	
*3	Revised 6-30-86

SECTION 1404. C-S, C-0, C-1, C-2 & C-3 (Commercial Zoning Districts)

ARTICLE 1404.1. C-S (PLANNED SHOPPING CENTER ZONING DISTRICT)

1404.1.1. ***Temporary signs pertaining to the sale, lease, hire or rental of property, subject to the following:*** *5

1. Such sign shall not exceed **60 square feet** in area.

2. Such sign may be double-faced.

3. Such sign shall not be illuminated.

4. Such sign may be placed flat against a wall of a building or such sign may be freestanding, but placement against a wall of a building shall be no higher than **12 feet** above grade nor above the roofline. The height of a freestanding sign shall not exceed **12 feet** above grade.

5. Such sign may be located in or project into required yards but such sign shall not be located in or project into any street or alley.

6. Such sign shall not be moving, animated or audible in any manner.

7. Such sign shall be located on the shopping center site and the number shall be limited to **one for each** establishment in the shopping center.

8. Such sign shall be removed from the shopping center site within **ten days** after the purpose of the sign is fulfilled.

1404.1.2. ***Temporary signs identifying the contractors and subcontractors, if any, engaged in the construction or repair of a building or buildings and the following:***

1. Such sign shall not exceed **200 square feet** in area.

2. Such sign may be double-faced.

3. Such sign shall not be illuminated.

4. Such sign may be placed flat against a wall of a building or such sign may be freestanding, but placement against a wall of a building shall be no higher than **24 feet** above grade nor above the roofline. The height of a freestanding sign shall not exceed **24 feet** above grade.

5. Such sign may be located in or project into required yards but such sign shall not be located in or project into any street or alley.

6. Such sign shall contain no advertising copy.

7. Such sign shall be located on the shopping center site and the number shall be limited to **one for each** such shopping center.

8. Unless such use permit is renewed, such sign shall be removed from the property within **ten days** after the work of contractors or subcontractors identified thereon is completed.

ARTICLE 1404.2. C-O (COMMERCIAL OFFICE ZONING DISTRICT)

1404.2.1. **Temporary signs pertaining to the sale, lease, hire or rental of property as provided in Chapter 7, Section 703. except that such sign shall not exceed 24 square feet in area.**

1404.2.2. **Temporary signs identifying the contractors and subcontractors, if any, engaged in the construction or repair of a building or buildings, as provided in Chapter 7 Section 703.**

1404.2.3. ***Permanent commercial office identification signs, which only identify the name of a multiple tenant commercial office, limited to one sign for each street frontage upon which the commercial office abuts as follows:***

1. ***Wall signs:***

a. Such sign shall not extend above the roofline unless it is erected on a parapet wall or facia that extends above the roofline of a flat roof on at least three sides of a building. Said parapet wall or facia shall not exceed a height greater than **one-third** of the building height which is measured from grade to the roofline.

b. The total allowable area of such sign shall not exceed **36 square feet**.

2. ***Freestanding signs, single or double-faced:***

a. Such sign shall have a maximum allowable height of **16 feet**.

b. The total allowable area of such sign shall not exceed **36 square feet**.

1404.2.4. **Additional permanent sign regulations:**

1. ***Sign lighting:***

a. Lighting shall be so installed as to avoid any glare or reflection into any adjacent property or into a street or alley which might create a traffic hazard.

b. No flashing, blinking, or rotating lights shall be permitted.

c. Illumination shall be by indirect or internal lighting only.

2. Signs shall be used only for identification of the commercial office site or the individual business therein.

3. No movable, animated, or audible signs shall be permitted.

4. No sign shall be erected in such a way as to interfere with or to confuse traffic, to cause a traffic hazard, or to obstruct the vision of motorists.

5. No sign shall be erected in such a way as to project over a public sidewalk, street, alley, or public place.

6. No banners, pennants, or similar displays shall be permitted.

7. Additional regulations are as provided in Chapter 13, Section 1408. hereof.

ARTICLE 1404.3. C-1 (NEIGHBORHOOD COMMERCIAL ZONING DISTRICT)

1404.3.1. ***On-site advertising (business) signs, subject to the following:***

1. ***Aggregate area of signs permitted:*** The aggregate area of all signs facing any street frontage shall be limited to **one square foot** for each lineal foot of said street or highway frontage; provided, however, that wall signs as permitted herein shall not be included in such aggregate.

2. ***Maximum number of freestanding signs permitted:***

   a. Not more than **one freestanding sign** shall be permitted on any lot or parcel of property having a street or highway frontage of less than **300 feet**.

   b. On parcels having a total street highway frontage of **400 feet** or more, an additional freestanding sign shall be permitted for each additional **200 lineal feet** of street or highway frontage in excess of the first **200 lineal feet** of frontage; provided, however, when more than one freestanding sign is permitted, no freestanding sign shall be located closer than **200 feet** from any other freestanding sign located on the same parcel of real property. *6

   c. On parcels having frontage on more than one street, one additional sign may be permitted for each such street frontage in accordance with the aforementioned formula.

3. ***Landscaping of freestanding signs:*** Freestanding signs shall be placed in a permanently landscaped area equal to **four square feet** for every **one square foot** of signage area. This landscaped area shall be located around the base of the sign. **6

4. ***Maximum area of freestanding signs:*** Such signs shall not exceed an area of **one square foot** for each linear foot of street adjoining the property to which they pertain, except that the area need not be less than **50 square feet** and in no case shall the area exceed **100 square feet**. Where there is more than **one** of these signs located on the property, the aggregate sign area shall not exceed **one square foot** for each linear foot of street adjoining the property or **120 square feet**, whichever is less, however, nothing contained herein shall require the aggregate sign area for any one establishment on the property to be less than **50 square feet**. ***6

5. ***Maximum height of freestanding signs:*** ***6

a. No freestanding sign shall exceed a maximum height of **24 feet** measured from ground level or a height equal to the distance from the base of said sign to the center line of any public right-of-way adjacent to the real property on which said sign is located, whichever is the lesser height, except if a sign is within **300 feet** and oriented to and intended to be read from a freeway or expressway that is constructed below or above the natural grade, or if such freeway or expressway is intersected by a major arterial, other freeway, expressway or bridge, the height in this area may be extended to **48 feet**.

b. The maximum height of any portion of any such sign or sign structure shall be **20 feet**, when within a radius of **100 feet** of such sign there exists a rural or residential zone.

c. For each **five feet** of radius in addition to the aforementioned **100 feet** within which additional radius no rural or residential zone exists, said sign or sign structure may be increased in height **one foot**, not to exceed the maximum height limits specified herein.

6. ***Wall Signs, provided that:*** *7

a. Such signs shall be oriented to the business street frontage or to common use parking lots, courtyards or pedestrian ways on which the business fronts or takes access. For purposes of this provision, signs attached to a canopy attached to a building wall shall be considered wall signs.

b. The total aggregate area of all such wall sign(s) shall not exceed **15%** of the front face/plane of a single/multi-tenant building, or wall plane of an individual business frontage where more than one tenant occupies the building. The calculation of such aggregate shall be measured from the ground to the roofline of the building.

c. Where a commercial building has more than **one** street frontage, only **one** of the frontages on a street may be designated by the owner/agent as the front of the building (or individual business) for purposes of calculating aggregate allowed wall sign area.

7. Such sign may be illuminated, but the source of illumination shall not be visible, and no flashing or intermittent illumination shall be employed, except that electronic message centers are allowed. ***6

8. Such sign shall not be moving, animated or audible in any manner. ***6

1404.3.2. ***Permanent directional signs, subject to the following:***

1. Such sign shall not exceed **six square feet** in area.

2. Such sign may be double-faced.

3. Such sign may be illuminated but the source of illumination shall not be visible, and no flashing or intermittent illumination shall be employed.

4. Such sign may be freestanding or placed parallel against a wall of a building, projecting therefrom not more than **two feet** with no part extending beyond the corner of the building nor above the roofline of the building. Such sign may be freestanding, but placement against a wall of a building shall be no higher than **12 feet** above grade. The height of a freestanding sign shall not exceed **12 feet** above grade.

5. Such sign may be located in or project into required yards, but such sign shall not be located in or project into any street or alley.

6. Such sign may be used to designate entrances or exits to or from a parking area if necessary for that purpose, but the number shall be limited to **one for each** such entrance or exit.

7. Such sign shall contain no advertising copy.

8. Such sign shall not count against total freestanding area or count in spacing formula.

1404.3.3. ***Temporary directional signs, subject to the following:***

1. Such sign shall not exceed **12 square feet** in area.

2. Such sign may be double-faced.

3. Such sign shall not be illuminated.

4. Such sign shall be freestanding. The height of a freestanding sign shall not exceed **12 feet** above grade.

5. Such sign may be located in or project into required yards but such sign shall not be located in or project into any street or alley.

6. Such sign shall contain no advertising copy.

7. Such sign shall be removed from the property within **ten days** after the purpose of the sign is fulfilled.

1404.3.4. ***Temporary signs pertaining to the development, subdivision sale, lease, hire or rental of property, and temporary signs identifying the contractors and subcontractors engaged in the construction or repair of a building or buildings subject to the following:***

1. Such sign shall not exceed **100 square feet** in area.

2. Such sign may be double-faced.

3. Such sign shall not be illuminated.

4. Such sign may be placed parallel against a wall of a building, projecting therefrom not more than **two feet** with no part extending beyond the corner of the building nor above the roofline of the building. Such sign may be freestanding but placement against a wall of a building shall be no higher than **12 feet** above grade. The height of a freestanding sign shall not exceed **12 feet** above grade.

5. Such sign may be located in or project into required yards but such sign shall not be located in or project into any street or alley.

6. Such sign shall not be moving, animated or audible in any manner.

7. Such sign shall be located on the property to which it pertains and the number shall be limited to **two for each** such property.

8. Such sign shall be removed from the property within **ten days** after the purpose of the sign is fulfilled.

ARTICLE 1404.4. C-2 (INTERMEDIATE COMMERCIAL ZONING DISTRICT)

1404.4.1. ***Signs for off-site advertising or for directing attention to a business, profession, commodity, service or entertainment conducted, sold, or offered elsewhere than upon the same premises (billboards), subject to the following:***[*7]

1. Such sign shall not exceed **300 square feet** in area.

2. Such sign may be double-faced or "V" shaped, provided the "V" shape is designed so that it is no greater than **54 inches** between faces at the apex and the angle between the faces of the sign is no greater than **45 degrees**.

3. Such sign may be illuminated but no flashing, intermittent or moving illumination shall be employed. Any lighting used shall be in accordance with the adopted outdoor light control provisions (see Chapter 10, Section 10013. herein). Any off-premise sign within **150 feet** of a rural or residential zone boundary shall be non-illuminated.

4. Such sign shall be freestanding.

5. Such sign shall not exceed a height of **30 feet**.

6. Such sign shall not be located within **100 feet** of any rural or residential zoning district boundary, whether or not separated by a public right-of-way.

7. Such sign shall not be located within **500 feet** of any park, school or roadside rest area.

8. Such sign shall not be audible in any manner.

9. If such sign is located within **three miles** of the boundary of any incorporated city or town, it shall not be located within **1,000 feet** of any other off-premise sign on the same street. When such sign is greater than **three miles** from the boundary of any incorporated city or town, it shall not be located within **3,000 feet** of any other off-premise sign on the same street.

10. Such sign shall maintain the same property line setbacks as provided for structures.

11. No billboard may be erected along any freeway or expressway under County jurisdiction. For purposes of this section, "along" shall mean within a minimum of **660 feet** of any existing or adopted expressway or freeway right-of-way. [*15]

12. On U. S. Highway 60-89 from Estrella Freeway to Wickenburg, no billboards shall be erected within a minimum of **660 feet** of said highway.

13. On State Route 74 between U. S. 60-89 and Lake Pleasant Road, no billboards shall be erected within a minimum of **660 feet** of said highway.

1404.4.2. ***On-site advertising (business) signs, subject to the following:***

1. ***Aggregate area of signs permitted:*** The aggregate area of all signs facing any street frontage shall be limited to **one square foot** for each lineal foot of said street or highway frontage provided, however, that wall signs as permitted herein shall not be included in such aggregate.

2. ***Maximum number of freestanding signs permitted:***

   a. Not more than **one freestanding sign** shall be permitted on any lot or parcel of property having a street or highway frontage of less than **300 feet**.

   b. On parcels having a total street highway frontage of **400 feet** or more, an additional freestanding sign shall be permitted for each additional **200 lineal feet** of street or highway frontage in excess of the first **200 lineal feet** of frontage; provided, however, when more than **one** freestanding sign is permitted, no freestanding sign shall be located closer than **200 feet** from any other freestanding sign located on the same parcel of real property.**8

   c. On parcels having frontage on more than **one** street, **one** additional sign may be permitted for each such street frontage in accordance with the aforementioned formula.

3. ***Landscaping of freestanding signs:*** Freestanding signs shall be placed in a permanently landscaped area equal to **four square feet** for every **one square foot** of signage area. This landscaped area shall be located around the base of the sign.*8

4. ***Maximum area of freestanding signs:*** Such signs shall not exceed an area of **one square foot** for each linear foot of street adjoining the property to which they pertain, except that the area need not be less than **50 square feet** and in no case shall the area exceed **150 square feet**. Where there is more than **one** of these signs located on the property, the aggregate sign area shall not exceed **one square foot** for each linear foot

of street adjoining the property or **200 square feet**, whichever is less; however, nothing contained herein shall require the aggregate sign area for any one establishment on the property to be less than **50 square feet**.***8

5. ***Maximum height of freestanding signs:***8

   a. No freestanding sign shall exceed a maximum height of **24 feet** measured from ground level or a height equal to the distance from the base of said sign to the center line of any public right-of-way adjacent to the real property on which said sign is located, whichever is the lesser height; except if a sign is within **300 feet** and oriented to and intended to be read from a freeway or expressway that is constructed below or above the natural grade or if such freeway or expressway is intersected by a major arterial, other freeway, expressway or bridge, the height in this area may be extended to **48 feet**.

   b. The maximum height of any portion of any such sign or sign structure shall be **20 feet**, when within a radius of **100 feet** of such sign there exists a rural or residential zone.

   c. For each **five feet** of radius in addition to the aforementioned **100 feet** within which additional radius no rural or residential zone exists, said sign or sign structure may be increased in height **one foot** not to exceed the maximum height limits specified herein.

6. ***Wall Signs, provided that:***9

   a. Such signs shall be oriented to the business street frontage or to common use parking lots, courtyards or pedestrian ways on which the business fronts or takes access. For purposes of this provision, signs attached to a canopy attached to a building wall shall be considered wall signs.

   b. The total aggregate area of all such wall sign(s) shall not exceed **15%** of the front face/plane of a single- or multi-tenant building, or wall plane of an individual business frontage where more than one tenant occupies the building. The calculation of such aggregate shall be measured from the ground to the roofline of the building.

   c. Where a commercial building has more than **one** street frontage, only **one** of the frontages on a street may be designated by the

owner/agent as the front of the building (or individual business) for purposes of calculating aggregate allowed wall sign area.

7. Such sign may be illuminated but the source of illumination shall not be visible, and no flashing or intermittent illumination shall be employed, except that electronic message centers are allowed.***8

8. Such sign shall not be animated or audible in any manner. ***8

9. Such sign may be a moving, rotating or revolving sign, but said sign shall not rotate faster than **seven revolutions per minute**. ***8, *16

1404.4.3. ***Permanent directional signs, subject to the following:***

1. Such sign shall not exceed **six square feet** in area.

2. Such sign may be double-faced.

3. Such sign may be illuminated but the source of illumination shall not be visible, and no flashing or intermittent illumination shall be employed.

4. Such sign may be placed parallel against a wall of a building, projecting therefrom not more than **two feet** with no part extending beyond the corner of the building nor above the roofline of the building. Such sign may be freestanding but placement against a wall of a building shall be no higher than **12 feet** above grade. The height of a freestanding sign shall not exceed **12 feet** above grade.

5. Such sign may be located in or project into required yards but such sign shall not be located in or project into any street or alley.

6. Such sign may be used to designate entrances or exits to or from a parking area if necessary for that purpose, but the number shall be limited to **one** for each such entrance or exit.

7. Such sign shall contain no advertising copy.

8. Such sign shall not count against total aggregate area allowed for freestanding identification signs.

1404.4.4. ***Temporary directional signs, subject to the following:***

1. Such sign shall not exceed **12 square feet** in area.

2. Such sign may be double-faced.

3. Such sign shall not be illuminated.

4. Such sign shall be freestanding. The height of a freestanding sign shall not exceed **12 feet** above grade.

5. Such sign may be located in or project into required yards but such sign shall not be located in or project into any street or alley.

6. Such sign shall contain no advertising copy.

7. Such sign shall be removed from the property within **ten days** after the purpose of the sign is fulfilled.

1404.4.5. ***Temporary signs pertaining to the development, subdivision sale, lease, hire or rental of property, and temporary signs identifying the contractors and subcontractors engaged in the construction or repair of a building or buildings subject to the following:***

1. Such sign shall not exceed **100 square feet** in area.

2. Such sign may be double-faced.

3. Such sign shall not be illuminated.

4. Such sign may be placed parallel against a wall of a building, projecting therefrom not more than **two feet** with no part extending beyond the corner of the building nor above the roofline of the building. Such sign may be freestanding but placement against a wall of a building shall be no higher than **12 feet** above grade. The height of a freestanding sign shall not exceed **12 feet** above grade.

5. Such sign may be located in or project into required yards but such sign shall not be located in or project into any street or alley.

6. Such sign shall not be moving, animated or audible in any manner.

7. Such sign shall be located on the property to which it pertains and the number shall be limited to **two for each such property**.

8. Such sign shall be removed from the property within **ten days** after the purpose of the sign is fulfilled.

ARTICLE 1404.5. C-3 (GENERAL COMMERCIAL ZONING DISTRICT)

1404.5.1. ***Signs for off-site advertising or for directing attention to a business, profession, commodity, service or entertainment conducted, sold, or offered elsewhere than upon the same premises (billboards), subject to the following:***[*6]

1. Such sign shall not exceed **300 square feet** in area.

2. Such sign may be double-faced or "V" shaped, provided the "V" shape is designed so that it is no greater than **54 inches** between faces at the apex and the angle between the faces of the sign is no greater than **45 degrees**.

3. Such sign may be illuminated but no flashing, intermittent or moving illumination shall be employed. Any lighting used shall be in accordance with the adopted outdoor light control provisions (see Chapter 10, Section 10013. herein). Any off-premise sign within **150 feet** of a rural or residential zone boundary shall be non-illuminated.

4. Such sign shall be freestanding.

5. Such sign shall not exceed a height of **30 feet**.

6. Such sign shall not be located within **100 feet** of any rural or residential zoning district boundary, whether or not separated by a public right-of-way.

7. Such sign shall not be located within **500 feet** of any park, school or roadside rest area.

8. Such sign shall not be audible in any manner.

9. If such sign is located within **three miles** of the boundary of any incorporated city or town, it shall not be located within **1,000 feet** of any other off-premise sign on the same street. When such sign is greater than **three miles** from the boundary of any incorporated city or town, it shall not be located within **3,000 feet** of any other off-premise sign on the same street.

10. Such sign shall maintain the same property line setbacks as provided for structures.

11. No billboard may be erected along any freeway or expressway under County jurisdiction. For purposes of this section, "along" shall mean within a minimum of **660 feet** of any existing or adopted expressway or freeway right-of-way. *11

12. On U. S. Highway 60-89 from Estrella Freeway to Wickenburg, no billboards shall be erected within a minimum of **660 feet** of said highway.

13. On State Route 74 between U. S. 60-89 and Lake Pleasant Road, no billboards shall be erected within a minimum of **660 feet** of said highway.

1404.5.2. ***On-site advertising (business) signs, subject to the following:***

1. ***Aggregate area of signs permitted:*** The aggregate area of all signs facing any street frontage shall be limited to **one square foot** for each lineal foot of said street or highway frontage provided, however, that wall signs as permitted herein shall not be included in such aggregate.

2. ***Maximum number of freestanding signs permitted:***

   a. Not more than **one freestanding sign** shall be permitted on any lot or parcel of property having a street or highway frontage of less than **300 feet**.

   b. On parcels having a total street highway frontage of **400 feet** or more, an additional freestanding sign shall be permitted for each additional **200 lineal feet** of street or highway frontage in excess of the first **200 lineal feet** of frontage; provided, however, when more than one freestanding sign is permitted, no freestanding sign shall be located closer than **200 feet** from any other freestanding sign located on the same parcel of real property. *7

   c. On parcels having frontage on more than **one** street, **one** additional sign may be permitted for each such street frontage in accordance with the aforementioned formula.

3. ***Landscaping of freestanding signs:*** Freestanding signs shall be placed in a permanently landscaped area equal to **four square feet** for every **one square foot** of signage area. This landscaped area shall be located around the base of the sign. **7

4. ***Maximum area of freestanding signs:*** Such signs shall not exceed an area of **one square foot** for each linear foot of street adjoining the property to which they pertain, except that the area need not be less than **50 square feet** and in no case shall the area exceed **250 square feet**. Where there is more than **one** of these signs located on the property, the aggregate sign area shall not exceed **one square foot** for each linear foot of street adjoining the property or **250 square feet**, whichever is less; however, nothing contained herein shall require the aggregate sign area for any one establishment on the property to be less than **50 square feet**. ***7

5. ***Maximum height of freestanding signs:***[***7]

   a. No freestanding sign shall exceed a maximum height of **40 feet** measured from ground level or a height equal to the distance from the base of said sign to the center line of any public right-of-way adjacent to the real property on which said sign is located, whichever is the lesser height, except if a sign is within **300 feet** and oriented to and intended to be read from a freeway or expressway that is constructed below or above the natural grade, or if such freeway or expressway is intersected by a major arterial, other freeway, expressway or bridge, the height in this area may be extended to **48 feet**.

   b. The maximum height of any portion of any such sign or sign structure shall be **20 feet**, when within a radius of **100 feet** of such sign there exists a rural or residential zone.

   c. For each **five feet** of radius in addition to the aforementioned **100 feet** within which additional radius no rural or residential zone exists, said sign or sign structure may be increased in height **one foot** not to exceed the maximum height limits specified herein.

6. ***Wall Signs, provided that:***[*8]

   a. Such signs shall be oriented to the business street frontage or to common use parking lots, courtyards or pedestrian ways on which the business fronts or takes access. For purposes of this provision, signs attached to a canopy attached to a building wall shall be considered wall signs.

   b. The total aggregate area of all such wall sign(s) shall not exceed **15%** of the front face/plane of a single- or multi-tenant building, or wall plane of an individual business frontage where more than one

tenant occupies the building. The calculation of such aggregate shall be measured from the ground to the roofline of the building.

c. Where a commercial building has more than **one** street frontage, only **one** of the frontages on a street may be designated by the owner/agent as the front of the building (or individual business) for purposes of calculating aggregate allowed wall sign area.

7. Such sign may be illuminated but the source of illumination shall not be visible, and no flashing or intermittent illumination shall be employed, except that electronic message centers are allowed. **7

8. Such sign shall not be animated or audible in any manner. ***7

9. Such sign may be a moving, rotating or revolving sign, but said sign shall not rotate faster than **seven revolutions per minute**. *12, ***7

1404.5.3. ***Permanent directional signs, subject to the following:***

1. Such sign shall not exceed **six square feet** in area.

2. Such sign may be double-faced.

3. Such sign may be illuminated but the source of illumination shall not be visible, and no flashing or intermittent illumination shall be employed.

4. Such sign may be placed parallel against a wall of a building, projecting therefrom not more than **two feet** with no part extending beyond the corner of the building nor above the roofline of the building. Such sign may be freestanding but placement against a wall of a building shall be no higher than **12 feet** above grade. The height of a freestanding sign shall not exceed **12 feet** above grade.

5. Such sign may be located in or project into required yards but such sign shall not be located in or project into any street or alley.

6. Such sign may be used to designate entrances or exits to or from a parking area if necessary for that purpose, but the number shall be limited to **one** for each such entrance or exit.

7. Such sign shall contain no advertising copy.

8. Such sign shall not count against total freestanding area or count in spacing formula.

1404.5.4. ***Temporary directional signs, subject to the following:***

1. Such sign shall not exceed **12 square feet** in area.

2. Such sign may be double-faced.

3. Such sign shall not be illuminated.

4. Such sign shall be freestanding. The height of a freestanding sign shall not exceed **12 feet** above grade.

5. Such sign may be located in or project into required yards but such sign shall not be located in or project into any street or alley.

6. Such sign shall contain no advertising copy.

7. Such sign shall be removed from the property within **ten days** after the purpose of the sign is fulfilled.

1404.5.5. ***Temporary signs pertaining to the development, subdivision sale, lease, hire or rental of property, and temporary signs identifying the contractors and subcontractors engaged in the construction or repair of a building or buildings subject to the following:***

1. Such sign shall not exceed **100 square feet** in area.

2. Such sign may be double-faced.

3. Such sign shall not be illuminated.

4. Such sign may be placed parallel against a wall of a building, projecting therefrom not more than **two feet** with no part extending beyond the corner of the building nor above the roofline of the building. Such sign may be freestanding, but placement against a wall of a building shall be no higher than **12 feet** above grade. The height of a freestanding sign shall not exceed **12 feet** above grade.

5. Such sign may be located in or project into required yards but such sign shall not be located in or project into any street or alley.

6. Such sign shall not be moving, animated or audible in any manner.

7. Such sign shall be located on the property to which it pertains and the number shall be limited to **two for each such property**.

8. Such sign shall be removed from the property within **ten days** after the purpose of the sign is fulfilled.

Date of Revisions			
C-S			
*5	Revised 2-20-94		
C-1			
*6	Revised 4-10-89	***6	Renumbered 4-10-89
**6	Added 4-10-89	*7	Revised 11-2-89
C-2			
*7	Revised 8-3-88	*9	Revised 11-02-89
*8	Added 4-10-89	*15	Effective 5-7-99
**8	Revised 4-10-89	*16	Revised 7-2-99
***8	Renumbered 4-10-89		
C-3			
*6	Revised 8-3-88	*8	Revised 11-2-89
*7	Revised 4-10-89	*12	Revised 7-2-99
**7	Added 4-10-89	*11	Effective 5-7-99
***7	Renumbered 4-10-89		

SECTION 1405. IND-1, IND-2 & IND-3
(Industrial Zoning Districts)

ARTICLE 1405.1. IND-1 (PLANNED INDUSTRIAL ZONING DISTRICT)

1405.1.1. ***Identification signs, subject to the following:***

1. Such sign shall not exceed an area of **one square foot** for each linear foot of street adjoining the property to which it pertains, except that the area need not be less than **50 square feet** and in no case shall the area exceed **200 square feet**. Where there is more than **one** of these signs located on the property, the aggregate sign area shall not exceed **one square foot** for each linear foot of street adjoining the property or **200 square feet**, whichever is less; however, nothing contained herein shall require the aggregate sign area for any one establishment on the property to be less than **50 feet**.

2. Such sign may be illuminated but the source of illumination shall not be visible, and no flashing or intermittent illumination shall be employed.

3. Such sign shall be attached to a wall of a building, projecting therefrom not more than **one foot**, and no part shall extend beyond the corner of the building nor above the roofline of the building.

4. Such sign shall not be moving, animated or audible in any manner.

5. Such sign shall be located on the property to which it pertains and the number shall be limited to **one for each** separate establishment on the property.

1405.1.2. ***Permanent directional signs, subject to the following:***

1. Such sign shall not exceed **two square feet** in area.

2. Such sign may be double-faced.

3. Such sign may be illuminated but the source of illumination shall not be visible, and no flashing or intermittent illumination shall be employed.

4. Such sign may be placed flat against a wall of a building or such sign may be freestanding, but placement against a wall of a building shall be no higher than **eight feet** above grade. The height of a freestanding sign shall not exceed **12 feet** above grade.

5. Such sign may be located in or project into required yards but such sign shall not be located in or project into any street or alley.

6. Such sign may be used to designate entrances or exits to or from a parking area if necessary for that purpose, but the number shall be limited to **one for each** such entrance or exit.

7. Such sign shall contain no advertising copy.

1405.1.3. ***Temporary directional signs, subject to the following:***

1. Such sign shall not exceed **12 square feet** in area.

2. Such sign may be double-faced.

3. Such sign shall not be illuminated.

4. Such sign may be placed flat against a wall of a building or such sign may be freestanding, but placement against a wall of a building shall be no higher than **eight feet** above grade. The height of a freestanding sign shall not exceed **12 feet** above grade.

5. Such sign may be located in or project into required yards but such sign shall not be located in or project into any street or alley.

6. Such sign shall contain no advertising copy.

7. Such sign shall be removed from the property within **ten days** after the purpose of the sign is fulfilled.

1405.1.4. ***Temporary signs pertaining to the sale, lease, hire or rental of property subject to the following:***

1. Such sign shall not exceed **100 square feet** in area.

2. Such sign may be double-faced.

3. Such sign shall not be illuminated.

4. Such sign may be placed flat against a wall of a building or such sign may be freestanding, but placement against a wall of a building shall be no higher than **24 feet** above grade nor above the roofline. The height of a freestanding sign shall not exceed **24 feet** above grade.

5. Such sign may be located in or project into required yards but such sign shall not be located in or project into any street or alley.

6. Such sign shall not be moving, animated or audible in any manner.

7. Such sign shall be located on the property to which it pertains and the number shall be limited to **one for each** such property.

8. Such sign shall be removed from the property within **ten days** after the purpose of the sign is fulfilled.

1405.1.5. ***Temporary freestanding signs pertaining to the subdivision or development of land subject to the following:***

1. Such sign shall not exceed **400 square feet** in area and where there is more than **one** of these signs located on the property, the aggregate sign area shall not exceed **1,000 square feet**.

2. Such sign may be double-faced.

3. Such sign shall not be illuminated.

4. Such sign shall not exceed **24 feet** in height.

5. Such sign shall not be located or project into any required yard.

6. Such sign shall not be moving, animated or audible in any manner.

7. Such sign shall be located on the property to which it pertains and the number shall be limited to **ten for each such property**.

8. Such sign shall be removed from the property within **ten days** after the purpose of the sign is fulfilled.

1405.1.6. ***Temporary signs identifying the contractors and subcontractors, engaged in the construction or repair of a building or buildings, subject to securing a Use Permit and the following:*** *7

1. Such sign shall not exceed **200 square feet** in area.

2. Such sign may be double-faced.

3. Such sign shall not be illuminated.

4. Such sign may be placed flat against a wall of a building or such sign may be freestanding, but placement against a wall of a building shall be no higher than **24 feet** above grade nor above the roofline. The height of a freestanding sign shall not exceed **24 feet** above grade.

5. Such sign may be located in or project into required yards but such sign shall not be located in or project into any street or alley.

6. Such sign shall contain no advertising copy.

7. Such sign shall be located on the property to which it pertains and the number shall be limited to **one for each** such property.

8. Unless such Use Permit is renewed, such sign shall be removed from the property within **ten days** after the work of the contractors or subcontractors identified therein is completed.

ARTICLE 1405.2. IND-2 (LIGHT INDUSTRIAL ZONING DISTRICT)

1405.2.1. ***Signs for off-site advertising or for directing attention to a business, profession, commodity, service or entertainment conducted, sold, or offered elsewhere than upon the same premises (billboards), subject to the following:*** *3, *6

1. Such sign shall not exceed **300 square feet** in area.

2. Such sign may be double-faced or "V" shaped, provided the "V" shape is designed so that it is no greater than **54 inches** between faces at the apex and the angle between the faces of the sign is no greater than **45 degrees**.

3. Such sign may be illuminated but no flashing, intermittent or moving illumination shall be employed. Any lighting used shall be in accordance with the adopted outdoor light control provisions (Chapter 11, Section 1112. herein). Any off-premise sign within **150 feet** of a rural or residential zone boundary shall be non-illuminated.

4. Such sign shall be freestanding.

5. Such sign shall not exceed a height of **30 feet**.

6. Such sign shall not be located within **100 feet** of any rural or residential zoning district boundary, whether or not separated by a public right-of-way.

7. Such sign shall not be located within **500 feet** of any park, school or roadside rest area.

8. Such sign shall not be audible in any manner.

9. If such sign is located within **three miles** of the boundary of any incorporated city or town, it shall not be located within **1,000 feet** of any other off-premise sign on the same street. When such sign is greater than **three miles** from the boundary of any incorporated city or town, it shall not be located within **3,000 feet** of any other off-premise sign on the same street.

10. Such sign shall maintain the same property line setbacks as provided for structures.

11. No billboard may be erected along any freeway or expressway under County jurisdiction. For purposes of this section, "along" shall mean within a minimum of **660 feet** of any existing or adopted expressway or freeway right-of-way. *11

12. On U. S. Highway 60-89 from Estrella Freeway to Wickenburg, no billboards shall be erected within a minimum of **660 feet** of said highway.

13. On State Route 74 between U. S. 60-89 and Lake Pleasant Road, no billboards shall be erected within a minimum of **660 feet** of said highway.

1405.2.2. ***On-site advertising (business) signs, subject to the following:***

1. ***Aggregate Area of Signs Permitted:*** The aggregate area of all signs facing any street frontage shall be limited to **one square foot** for each lineal foot of said street or highway frontage provided, however, that wall signs as permitted herein shall not be included in such aggregate.

2. ***Maximum Number of Freestanding Signs Permitted:***

   a. Not more than **one** freestanding sign shall be permitted on any lot or parcel of property having a street or highway frontage of less than **300 feet**.

   b. On parcels having a street or highway frontage of **300 feet** or more, an additional freestanding sign shall be permitted for each additional **200 lineal feet** of street or highway frontage in excess of the first **200 lineal feet** of frontage provided, however, when more than **one** freestanding sign is permitted, no freestanding sign shall be located closer than **200 feet** from any other freestanding sign located on the same parcel of real property.

   c. On parcels having frontage on more than **one** street, **one** additional sign may be permitted for each such street frontage in accordance with the aforementioned formula.

3. ***Maximum Area of Freestanding Signs:*** Such signs shall not exceed an area of **one square foot** for each linear foot of street adjoining the property to which they pertain, except that the area need not be less than **50 square feet** and in no case shall the area exceed **200 square feet**.

Where there is more than **one** of these signs located on the property, the aggregate sign area shall not exceed **one square foot** for each linear foot of street adjoining the property or **200 square feet**, whichever is less; however, nothing contained herein shall require the aggregate sign area for any **one** establishment on the property to be less than **50 square feet**.

4. ***Maximum Height of Freestanding Signs:***

   a. No freestanding sign shall exceed a maximum height of **40 feet** measured from ground level or a height equal to the distance from the base of said sign to the center line of any public right-of-way adjacent to the real property on which said sign is located, whichever is the lesser height, except if a sign is within **300 feet** and oriented to and intended to be read from a freeway or expressway the height in this area may be extended to **48 feet**.

   b. The maximum height of any portion of any such sign or sign structure shall be **20 feet**, when within a radius of **100 feet** of such sign there exists a rural or residential zone.

   c. For each **five feet** of radius in addition to the aforementioned **100 feet** within which additional radius no rural or residential zone exists, said sign or sign structure may be increased in height **one foot** not to exceed the maximum height limits specified herein.

5. ***Wall Signs, provided that:***[*7]

   a. Such signs shall be oriented to the business street frontage or to common use parking lots, courtyards or pedestrian ways on which the business fronts or takes access. For purposes of this provision, signs attached to a canopy attached to a building wall shall be considered wall signs.

   b. The total aggregate area of all such wall sign(s) shall not exceed **15%** of the front face/plane of a single- or multi-tenant building, or wall plane of an individual business frontage where more than one tenant occupies the building. The calculation of such aggregate shall be measured from the ground to the roofline of the building.

   c. Where an industrial building has more than **one** street frontage, only **one** of the frontages on a street may be designated by the owner/agent as the front of the building (or individual business) for purposes of calculating aggregate allowed wall sign area.

6. Signs may be illuminated but the source of illumination shall not be visible, and no flashing or intermittent illumination shall be employed, except that electronic message centers are allowed.

7. Signs shall not be moving, animated or audible in any manner.

1405.2.3. ***Permanent directional signs, subject to the following:***

1. Such sign shall not exceed **three square feet** in area.

2. Such sign may be double-faced.

3. Such sign may be illuminated but the source of illumination shall not be visible, and no flashing or intermittent illumination shall be employed.

4. Such sign may be placed flat against a wall of a building or such sign may be freestanding but placement against a wall of a building shall be no higher than **eight feet** above grade. The height of a freestanding sign shall not exceed **12 feet** above grade.

5. Such sign may be located in or project into required yards but such sign shall not be located in or project into any street or alley.

6. Such sign may be used to designate entrances or exits to or from a parking area if necessary for that purpose, but the number shall be limited to **one for each** such entrance or exit.

7. Such sign shall contain no advertising copy.

1405.2.4. ***Temporary directional signs, subject to the following:***

1. Such sign shall not exceed **12 square feet** in area.

2. Such sign may be double-faced.

3. Such sign shall not be illuminated.

4. Such sign may be placed flat against a wall of a building or such sign may be freestanding, but placement against a wall of a building shall be no higher than **eight feet** above grade. The height of a freestanding sign shall not exceed **12 feet** above grade.

5. Such sign may be located in or project into required yards but such sign shall not be located in or project into any street or alley.

6. Such sign shall contain no advertising copy.

7. Such sign shall be removed from the property within **ten days** after the purpose of the sign is fulfilled.

1405.2.5. ***Temporary signs pertaining to the sale, lease, hire or rental of property, subject to the following:***

1. Such sign shall not exceed **200 square feet** in area.

2. Such sign may be double-faced.

3. Such sign shall not be illuminated.

4. Such sign may be placed flat against a wall of a building or such sign may be freestanding, but placement against a wall of a building shall be no higher than **24 feet** above grade nor above the roofline. The height of a freestanding sign shall not exceed **24 feet** above grade.

5. Such sign may be located in or project into required yards but such sign shall not be located in or project into any street or alley.

6. Such sign shall not be moving, animated or audible in any manner.

7. Such sign shall be located on the property to which it pertains and the number shall be limited to **one for each** such property.

8. Such sign shall be removed from the property within **ten days** after the purpose of the sign is fulfilled.

1405.2.6. ***Temporary freestanding signs pertaining to the subdivision or development of land, subject to the following:***

1. Such sign shall not exceed **400 square feet** in area and where there is more than **one** of these signs located on the property, the aggregate sign area shall not exceed **1,000 square feet**.

2. Such sign may be double-faced.

3. Such sign shall not be illuminated.

4. Such sign shall not exceed **24 feet** in height.

5. Such sign shall not be located or project into any required yard.

6. Such sign shall not be moving, animated or audible in any manner.

7. Such sign shall be located on the property to which it pertains and the number shall be limited to **ten for each** such property.

8. Such sign shall be removed from the property within **ten days** after the purpose of the sign is fulfilled.

1405.2.7 ***Temporary signs identifying the contractors and subcontractors engaged in the construction or repair of a building or buildings, subject to securing a Use Permit and the following:***

1. Such sign shall not exceed **200 square feet** in area.

2. Such sign may be double-faced.

3. Such sign shall not be illuminated.

4. Such sign may be placed flat against a wall of a building or such sign may be freestanding, but placement against a wall of a building shall be no higher than **24 feet** above grade nor above the roofline. The height of a freestanding sign shall not exceed **24 feet** above grade.

5. Such sign may be located in or project into required yards, but such sign shall not be located in or project into any street or alley.

6. Such sign shall contain no advertising copy.

7. Such sign shall be located on the property to which it pertains and the number shall be limited to **one for each such property**.

8. Any use permit approved for such sign shall be limited to a period of time not to exceed **one year** from the date of such approval, but said permit may be renewed for like periods thereafter upon the property owner submitting to the Board of Adjustment, having jurisdiction, satisfactory evidence indicating that the need for such sign continues to exist.

9. Unless such permit is renewed, such sign shall be removed from the property upon the expiration of the previously approved use permit or within **ten days** after the work of contractors or subcontractors identified thereon is completed, whichever occurs first.

ARTICLE 1405.3. IND-3 (HEAVY INDUSTRIAL ZONING DISTRICT)

Signs shall be subject to the same provisions applying to signs when located in the Light Industrial Zoning District (IND-2).

Date of Revisions			
I-1			
*7	Revised 2-20-94		
I-2			
*3	Revised 10-1-79	*7	Revised 11-02-89
*6	Revised 8-3-88	*11	Effective 5-7-99

SECTION 1406. Overlay Zoning Districts

ARTICLE 1406.1. WICKENBURG SCENIC CORRIDOR

1406.1.1. **Class 3:** All new signs, in addition to regulations found elsewhere in this ordinance, shall conform to the following regulations:

1. All signs shall be kept to minimum size and height required for reasonable exposure of said signs.

2. Advertising and directional signs will be encouraged to be placed along the Wickenburg Highway on Arizona Department of Transportation Highway "logo" signs.

3. A maximum of one freestanding sign shall be allowed for each lot.

4. All signs shall be made of or appear to be made of natural materials.

5. All signs shall not use more than **three different colors**. One color must match the principal building color.

6. Off-site advertising signs shall be prohibited within **660 feet** of the Highway right-of-way.

1406.1.2. **Class 4:** All new signs, in addition to regulations found elsewhere in this Ordinance shall conform to the following regulations:

1. All signs shall be kept to a minimum size and height required for reasonable exposure of said signs.

2. Advertising and directional signs will be encourage to be placed along the Wickenburg Highway on Arizona Department of Transportation Highway "logo" signs.

3. All signs shall not use more than **three different colors**. **One color** must match the principal building color.

4. All signs shall be made of or appear to be made of natural materials.

5. Off-site advertising signs shall be prohibited.

ARTICLE 1406.2. HWY 74 SCENIC CORRIDOR

1406.2.1. In addition to the sign regulations found elsewhere in this ordinance, the following shall apply to signs within the corridor:

1. A maximum of **two** freestanding monument signs shall be allowed for each development at each approved entrance with the exception of Development Master Plans. (However, there shall be no signs on an individual single family home lot). A sign package for Development Master Plans will be approved by the Board of Supervisors.

2. All signs shall be made of durable materials and be designed to be consistent with the architectural treatment of the building they relate to and overall character of the site.

3. Off-site advertising signs shall be prohibited within the corridor zone.

4. Signs for non-residential uses shall be consistent with the underlying zoning district regulations and shall be approved as part of the plan of development by the Board of Supervisors as provided by Chapter 10, Section 1009.4.11. herein.

SECTION 1407. MOBILE HOME PARKS

ARTICLE 1407.1. SIGNS IDENTIFYING MOBILE HOME PARKS SHALL BE SUBJECT TO THE FOLLOWING STANDARDS:

1407.1.1. Such sign shall not exceed **24 square feet** in area.

1407.1.2. Such sign may be double-faced.

1407.1.3. Such sign may be illuminated but the source of illumination shall not be visible, and no flashing or intermittent illumination shall be employed.

1407.1.4. Such sign may be placed flat against a wall of a building or such sign may be freestanding, but placement against a wall of a building shall be no higher than **12 feet** above grade not above the roofline. The height of a freestanding sign shall not exceed **12 feet** above grade.

1407.1.5. Such sign may be located in or projected into required yards but such sign shall not be located in or projected into any street or alley.

1407.1.6. Such sign shall contain no advertising copy.

1407.1.7. Such sign shall be located on the property to which it pertains, and the number shall be limited to **one for each street frontage** on which the mobile home park has a major access entrance.

SECTION 1408. ADDITIONAL SIGN REGULATIONS

ARTICLE 1408.1.

The sign area shall be the entire area within a single continuous perimeter enclosing the extreme limits of writing, representation, emblem or any figure of similar character, together with any material or color forming an integral part of the display or used to differentiate the sign from the background against which it is placed. The supports or uprights on which the sign is supported shall not be included in determining the area of the sign.

ARTICLE 1408.2.

When the **two** faces of a double-faced sign have identical dimensions and the maximum distance between these two faces does not exceed **54 inches**, the area of a double-faced sign shall include only one of the faces, except as otherwise provided herein. *8

ARTICLE 1408.3.

Signs projecting or extending over streets shall be erected not less than **eight feet** above any part of the sidewalk of such street. The projection or extension of signs over the vehicular lanes of streets shall not be permitted. Signs projecting or extending over alleys shall be not less than **15 feet** above grade directly beneath such sign.

Date of Revisions			
*8	Revised 10-1-79		

Chapter 15 – VIOLATION, PENALTY & ENFORCEMENT

SECTION 1501. VIOLATION, PENALTY AND ENFORCEMENT

ARTICLE 1501.1. PURPOSE: This chapter identifies what constitutes a violation of this Ordinance, establishes penalties and remedies, and authorizes enforcement procedures.

ARTICLE 1501.2. DEFINITIONS

1501.2.1. ***Hearing Officer:*** The individual(s) appointed by the Maricopa County Board of Supervisors to hear and decide all civil proceedings established by any Ordinance, regulation, or provision enacted or adopted by the Board of Supervisors under the authority granted by ARS Title 11, Chapter 6 County Planning and Zoning.

1501.2.2. ***Zoning Inspector:*** The Director of the Maricopa County Planning and Development Department or his/her designated representative.

ARTICLE 1501.3. ZONING INSPECTION AND ENFORCEMENT

1501.3.1. ***Duties:*** The enforcing officer of this Ordinance shall be the Zoning Inspector, and it shall also be the duty of the Sheriff of Maricopa County and of all officers of said County otherwise charged with the enforcement of law to enforce the provisions of the Ordinance. However, the Zoning Inspector:

1. Shall receive application for zoning clearance as required by this Ordinance.

2. May examine premises for which zoning clearances have been requested.

3. May make necessary inspections to secure compliance with the provisions of this Ordinance.

4. Shall when requested by the Board of Supervisors, or when the interests of Maricopa County so required, make investigations in connection with any matter referred to in this Ordinance and render written reports thereof.

5. Shall further issue such notices or orders as may be necessary for the purpose of enforcing compliance with the provisions of this Ordinance.

1501.3.2. ***Inspections:*** See Item 1501.3.1.3. [*1, **2]

1501.3.3. The Zoning Inspector may adopt rules and procedures consistent with this Ordinance for the implementation thereof. [*1, *2]

1501.3.4. The Zoning Inspector shall keep careful and comprehensive records of applications for zoning clearances, of inspections made, of reports rendered, and of notices or orders issued. He shall further retain on file copies of all papers in connection with zoning clearances for such time as may be required by law. *1, *2

1501.3.5. ***Reports:*** See Item 1501.3.1.4. **1

1501.3.6. Permits for uses, buildings or purposes where the same would be in conflict with the regulations of this Ordinance shall not be issued and any such permit if issued in conflict with the regulations of this Ordinance shall be null and void. *1

Date of Revisions			
*1	Revised 12-30-74	*2	Revised 10-3-77
**1	Deleted 12-30-74	**2	Added 10-3-77

SECTION 1502. VIOLATION

ARTICLE 1502.1.

It shall be unlawful to erect, construct, reconstruct, alter or use any building or structure within a zoning district without first obtaining a building permit.

ARTICLE 1502.2.

It shall be unlawful to erect, construct, reconstruct, alter or use any land within a zoning district in violation of any regulation or any provision of any Ordinance pertaining thereto.

ARTICLE 1502.3.

Any such violation shall constitute a public nuisance.

SECTION 1503. PENALTY

ARTICLE 1503.1. CRIMINAL: Any person, firm, or corporation determined to be in violation of any such Ordinance or any part thereof, is guilty of a **class 2 misdemeanor**. Each and every day during which the illegal erection, construction, reconstruction, alteration, maintenance or use continues is a separate offense.

ARTICLE 1503.2. CIVIL: Any person, firm, or corporation determined to be in violation of any such Ordinance or any part thereof, is guilty of a civil penalty. Each

and every day during which the illegal erection, construction, reconstruction, alteration, maintenance or use continues is a separate offense. Civil penalties shall not exceed the amount of the maximum fine for a **class 2 misdemeanor**. If an alleged violator is served with a notice of violation, he shall not be subject to a criminal charge arising out of the same facts.

ARTICLE 1503.3. OTHER REMEDIES: If any building or structure is or is proposed to be erected, constructed, reconstructed, altered, maintained or used or any land is or is proposed to be used in violation of any Ordinance, regulation, or provision enacted or adopted by the Board of Supervisors under ARS Title 11 Chapter 6 County Planning and Zoning, the Board of Supervisors, County Attorney, Zoning Inspector, or any adjacent or neighboring property owner who is specially damaged by the violation, in addition to the other remedies provided by law, may institute injunction, mandamus, abatement or any other appropriate action or proceedings to prevent or abate or remove the unlawful erection, construction, reconstruction, alteration, maintenance or use.

SECTION 1504. ENFORCEMENT

ARTICLE 1504.1. WITHHOLDING OF PERMITS: The Zoning inspector shall withhold the issuance of any and all permits when it appears that the proposed erection, construction, reconstruction, alteration, maintenance or use does not fully conform to any Ordinance, regulation, or provision enacted or adopted by the Board of Supervisors under ARS Title 11 Chapter 6 County Planning and Zoning.

ARTICLE 1504.2. CRIMINAL: The Zoning Inspector in consultation with County Attorney is authorized to develop any rules, procedures, processes and forms necessary to implement criminal proceedings under any ordinance, regulation, or provision enacted or adopted by the Board of Supervisors under ARS Title 11 Chapter 6 County Planning and Zoning.

ARTICLE 1504.3. CIVIL: The Board of Supervisors hereby establishes the position of Hearing Officer to hear and decide all civil proceedings established by any Ordinance, regulation, or provision enacted or adopted by the Board of Supervisors under ARS Title 11 Chapter 6 Planning and Zoning.

The Board of Supervisors shall adopt separate rules of procedure for civil hearings and review of hearings. These rules shall be adopted in the same manner as the Zoning Ordinance.

The Zoning Inspector in consultation with the Hearing Officer is authorized to develop any other rules, procedures, processes and forms necessary to implement civil proceedings under any Ordinance, regulation, or provision enacted or adopted by the Board of Supervisors under ARS Title 11 Chapter 6 County Planning and Zoning.

ARTICLE 1504.4. ADMINISTRATIVE: The Zoning Inspector is authorized to develop any other rules, procedures, processes and forms necessary to implement any other enforcement action under any Ordinance, regulation, or provision enacted or adopted by the Board of Supervisors under ARS Title 11 Chapter 6 County Planning and Zoning.

ARTICLE 1504.5. ZONING CLEARANCE:[*1, **2] It shall be unlawful to construct, alter, repair or improve, remove or demolish, or to commence the creation, construction, alteration, removal or demolition of a building, structure or use without first filing with the Zoning Inspector an application in writing and obtaining a Zoning Clearance, except that such clearance shall not be required for:[*5]

1. Repairs or improvements of a value of less than **$500 dollars**.

2. Fences or walls with an overall maximum finished height of **six feet or less**, unless said fence:

    a. Is part of a pool barrier;

    b. Serves to retain soil greater than **18 inches**, as measured vertically from finished grade;

    c. Is associated with any hillside development;

    d. Is used as a corral;

    e. Is the primary use of the property.

ARTICLE 1504.6. LIMITATION OF THE ZONING CLEARANCE: [*2, *6, *30] A Zoning Clearance shall not be issued for any building or structure on any lot or parcel unless the owner of the subject lot or parcel guarantees access to Maricopa County personnel and appropriate emergency service providers for the purposes of building inspections, zoning enforcement and the provision of emergency services and any and all public utilities servicing the site. An owner or his agent, by signing an application for a building permit, guarantees such access.

ARTICLE 1504.7. EXPIRATION OF ZONING CLEARANCES: *3

1504.7.1. Any Zoning Clearance authorized under the terms of this Ordinance shall expire and be considered void under the following circumstances:

1. **Six months** from the effective date of the Zoning Clearance provided the use or authorized building construction to accommodate the use have not actually commenced.

2. If the Building Permit (for which the Zoning Clearance issuance was a requirement) expires for any reason.

3. If the provisions of this Ordinance, under which the Zoning Clearance was originally issued, are amended such that the use would not meet the amended provisions, provided the construction or use has not actually commenced under valid Building Permit issuance, and provided a minimum of **six months** actually elapsed since the issuance of the Zoning Clearance.

1504.7.2. If a Zoning Clearance is expired, it shall be necessary to re-apply for a new Zoning Clearance in accordance with Chapter 15, Section 1504, Article 1504.5. herein, which shall be reviewed under the Ordinance provisions in effect at the time of the re-application.

ARTICLE 1504.8 DEVELOPMENT REVIEW: *4 Prior to the issuance of a permanent Certificate of Occupancy for all buildings to be occupied by the public and/or a permanent final inspection for construction of a single-family residence or duplex, construction and/or development within the unincorporated area shall be in compliance with all conditions and plans approved by the Board of Supervisors, Board of Adjustment, and Zoning Clearances issued by staff. The Zoning Inspector shall enforce this section in the following manner:

1504.8.1. Enforce all conditions of approval by the Board of Supervisors or the Board of Adjustment.

1504.8.2. Withhold authorization for a permanent Certificate of Occupancy or permanent final inspection for any construction or development that has not complied with the conditions or plans approved by the Board of Supervisors, Board of Adjustment, and staff in the issuance of Zoning Clearances for Building Permit purposes. The Zoning Inspector may authorize the Chief Building Official to issue a permanent Certificate of Occupancy or permanent final inspection without posting the bond required in Chapter 15, Section 1504., Article 1504.8.3. Said authorization may only be given if:

1. The value of the incomplete site improvements is less than **$5,000**;

2. No hazard to public health, safety and welfare would result; and

3. Written confirmation by the owner that he will complete the required site improvements within a stated and acceptable time frame has been provided.

Failure to complete the improvements as indicated in writing shall be treated as a zoning violation in accordance with Sections 1501 through 1503 of this Ordinance.

1504.8.3. Allow a temporary Certificate of Occupancy for all buildings to be occupied by the public or a temporary final inspection for construction of a single-family residence or duplex if financial guarantees in the form of a bond is provided to the County. An acceptable bond would be payable to the County in the full amount of the improvement(s) yet to be completed. The Bond must specify a date for the completion of the improvement(s), which shall be no later than **one year** from the date of issuance. The term of the bond shall be as approved by the Zoning Inspector and may be extended for an additional year upon application. If the work is not done by the specified date, the County will cash the bond and deposit the funds in the County's General Fund. In addition, the County has the authority to require the owner to complete the improvements or vacate the structure until the improvements are complete. Notwithstanding any of the above, the Zoning Inspector may deny a temporary occupancy when he has determined that a hazard to public health, safety, or general welfare may result.

Date of Revisions			
*1	Revised 12-30-74	*4	Added 6-6-91
*2	Added 12-30-74	*5	Effective 1-19-01
**2	Added 10-3-77	*6	Revised 10-3-77
*3	Added 5-16-90	*30	Effective 6-7-98

MARICOPA COUNTY ZONING ORDINANCE

Chapter 16 – Fees

SECTION 1601. PURPOSE

ARTICLE 1601.1. PURPOSE: To consolidate in one location in the Ordinance all regulations relating to fees, fines and penalties. This Article establishes the amounts and types of fees, fines and penalties to be charged.

FEE TYPE	**DESCRIPTION** (per offense & conviction)	**MINIMUM FEE BY USE**	**MINIMUM FEE BY USE**
		SINGLE FAMILY	***ALL OTHER USES***
Civil Fines	Initial	$100	$300
	Initial Non-compliance	$200	$500
	Daily Non-compliance	$20	$30
	Recurrence	$300	$500
Criminal Fines		Class 2 MISDEMEANOR	Class 2 MISDEMEANOR
Investigation Fee	Charged when compliance achieved by administrative means	Amount equal to permit or application fee	Amount equal to permit or application fee

SECTION 1602. FEES

ARTICLE 1602.1. FEES: *3, *4, *5, *6, *8, *7, ***9, ***10, ***11, **12, *13, *15, *16, *23, *24 The following fees shall be charged for the filing for amendment to this Ordinance or approval of a Plan of Development with no provision for refund:

FEE TYPE	**DESCRIPTION**	**FEE**
Non-site Plan Zoning Change	Change of zoning to Rural Zoning District.	**$500 plus $50 per acre or portion there of Maximum fee - $30,000**
Non-site Plan Zoning Change	Change of zoning to Single-Family Residential Zoning District.	**$500 plus $50 per acre or portion there of Maximum fee - $30,000**
Non-site Plan Zoning Change	Change of zoning to Senior Citizen Overlay Zoning District (only as a separate application).	**$500 plus $50 per acre or portion there of Maximum fee - $30,000**
Non-site Plan Zoning Change	Change of zoning to Two-Family or Multi-Family Residential Zoning District.	**$500 plus $50 per acre or portion there of Maximum fee - $30,000**
Non-site Plan Zoning Change	Change of zoning to C-O, C-1, C-2 & C-3 Zoning Districts.	**$500 plus $50 per acre or portion there of Maximum fee - $30,000**
Concept Plan	Concept Plan review only in Planned Development Overlay Zoning District.	**20% of $1,000 plus $100 per acre or portion thereof Maximum fee - $6,000**

Precise Plan	Precise Plan review only in Planned Development Overlay Zoning District.	**80% of $1,000 plus $100 per acre or portion thereof Maximum fee - $24,000**
Site Plan Zoning Change*23	Planned Area Development (PAD).	**$1500 + $100 per acre or portion thereof Maximum Fee - $30,000*23**
Site Plan Zoning Change	Unit Plans of Development for R.U.P.D. or C.U.P.D. *19	**$1,000 + $100 per acre or portion thereof Maximum Fee - $30,000**
Site Plan Zoning Change	Special Use Permits	**$1,000 + $100 per acre or portion thereof Maximum Fee - $30,000**
Site Plan Zoning Change	Plan of Development for (C-S) Planned Shopping Center Zoning District.	**$1,000 + $100 per acre or portion thereof Maximum Fee - $30,000**
Site Plan Zoning Change	Commercial Zoning Districts.	**$1,000 + $100 per acre or portion thereof Maximum Fee - $30,000**
Site Plan Zoning Change	Precise Plan review in Planned Development Overlay Zoning District when in conjunction with another zoning district change.	**$1,000 + $100 per acre or portion thereof Maximum Fee - $30,000**
Site Plan Zoning Change	Industrial Zoning Districts	**$1,000 + $100 per acre or portion thereof Maximum Fee - $30,000**
Site Plan Zoning Change	Plan of Development review pursuant to the Hillside Development regulations	**$1,000 + $100 per acre or portion thereof Maximum Fee - $30,000**
Amendments to Zoning Ordinance Text	Zoning Ordinance Text	**$1,000 per Section Maximum Fee - $5,000**
Amendments to Zoning Ordinance Application	Zoning Application	**$100 for each occurrence in progress**
Comprehensive Plan Amendments to Zoning Ordinance Text	Comprehensive Plan Amendment	**$500 + $10 per acre or portion thereof Maximum Fee - $30,000**
Administrative Site Plan Amendments*24	Minor Amendments to approved site plans for Special Use Permits, Plans of Development, and Unit Plans of Development	**$250.00**
Modification of Stipulation	Modification of Stipulation	**$250 per stipulation Minimum fee - $500 Maximum fee - $1,500**
Special Use Permit	Special Use Permit for mobile home / manufactured home per lot of record in a rural zoning district*16	**$225 plus $25 per acre**

Zoning Clearance	Any request for Zoning Clearance.	**$25**
Continuance of Public Hearing	An additional fee shall be charged for any continuance of a public hearing granted by the Commission at the request of a petitioner or petitioner's representative.	**$250**
Automation Fee	An automation fee shall be charged in addition to each of the other above-noted fees. *20	**$25**

Date of Revisions			
*3	Revised 1-3-72	*15	Revised 8-21-94
*4	Revised 3-22-76	*16	Added 11-6-95
*5	Revised 3-12-84, Effective 4-1-84	*19	Effective 5-15-98
*6	Revised 1-7-85	*20	Effective 6-21-98
*7	Revised 4-1-85	*22	Effective 9-17-99
*8	Revised 7-1-85	*23	Effective 3-31-00
***9	Renumbered 8-4-86	*24	Deletion of Slight Refinements & revisions, effective 2-7-03
***10	Renumbered 12-7-87		
***11	Renumbered 2-6-89		
**12	Renumbered 8-23-90		
*13	Revised 8-1-91		

SECTION 1603. FEES FOR APPEALS*2, *7

ARTICLE 1603.1 APPEALS:[*6] The following fees shall be charged for the filing of an appeal concerning the interpretation or administration of this Ordinance with no provision for refund:

FEE TYPE	DESCRIPTION	FEE
Appeal	Residential	**$300**
	Non-Residential	**$300**

Date of Revisions			
*2	Revised 3-22-76	*7	Revised 8-1-91
*6	Added 4-1-84		

SECTION 1604. APPLICATION FEES FOR VARIANCE

ARTICLE 1604.1. APPLICATION FEES FOR VARIANCE: *8, *9 The following fees shall be charged for the filing of an application for any Variance to the regulations of this Ordinance with no provision for refund:

FEE TYPE	DESCRIPTION	FEE
Variance	Residential Variance	**$100 plus $20 for each additional request**
Variance	Non-Residential Variance	**$350 plus $100 for each additional request**
Variance	Blanket Variance	**$300 plus $100 for each additional request**
Continuance	Continuance of Public Hearing when requested by applicant prior to the hearing.	**$250**

Date of Revisions			
*8	Revised 2-20-94	*9	Revised 8-21-94

SECTION 1605. USE PERMITS

ARTICLE 1605.1. USE PERMITS: The following fees shall be charged with no provision for refund:

FEE TYPE	DESCRIPTION	MIN FEE BY USE
Conditional Use Permit	Residential	**$75**
Conditional Use Permit	Residential-Status Report	**$25**
Conditional Use Permit	Non-Residential	**$250**
Conditional Use Permit	Non-Residential-Status Report	**$100**
Temporary Use Permit	Residential	**$100 per year**
Temporary Use Permit	Non-Residential	**$350 per year**

Chapter 17 – Index & Appendices

SECTION 1701. INDEX

Accessory Buildings: 11-8

Additional Dwelling Unit: 11-9

Additional Yard and Open Space: 11-10

Adult Businesses: 2-1, 8-14

Agriculture: 13-1

Aircraft: 11-19

Amateur Radio Antennas: 11-19

Amendments: 3-4

Amendment Approval: 3-7

Amendment by Commission: 3-5

Amendment by Property Owner: 3-4

Amendment to Zoning Ordinance Standards: 3-6

Appeals: 3-2

Applying General Provisions: 11-1

Board of Adjustment: 3-1

Boarding Stables: 13-2

Building Permits: 15-2, 15-3, 15-4, 15-5

Campers, Truck: 11-19

Camping Trailers: 11-19

Caretaker(s) Quarters: 13-13

Churches: 5-1, 6-1, 8-9

Citizen Review Process: 3-8

Commercial Unit Plan of Development (CUPD): 10-7

Compliance with County Plans: 3-8

Conditional Use: 13-13

Construction of Language: 1-2

Construction Office/Yard Complex: 13-15

Corner Lots: 11-12

Corrals: 5-5, 6-4, 15-4

Cottage Industry: 13-14

Declaration: 1-1

Definitions: 2-1

Development Review: 15-5

Development Rights, Protected: 12-16

Drainage: 12-19

Effective Date: 1-1

Emergency Housing: 5-6, 6-5, 8-1, 8-5, 8-11, 9-2

Enforcement: 15-3

Farms: 5-1, 9-8

Fees: 16-1

Fences, Walls & Screening: 5-5, 6-4, 8-2, 8-13, 8-19, 8-22, 9-4, 9-11, 9-15, 10-8, 10-9, 10-22, 10-25, 10-28, 15-4

Flood Control: 11-19

General Provisions: 11-1

Golf Courses: 5-3, 6-2

Group Homes: 5-1, 6-1, 7-3

Height Regulations, Additional: 11-11

Hillside Regulations: 12-1

Home Occupations: 5-3, 6-2, 13-4

Industrial Unit Plan of Development (IUPD): 10-8

Interpretation: 1-2

Kennels: 13-2

Key Lots: 6-4

Lands Previously Zoned by other Jurisdictions: 4-4

Lands Not Previously Zoned: 4-4

Landscaping: 8-3, 8-7, 9-5, 10-5, 10-8, 10-10, 10-24, 10-26

Loading and Unloading: 11-6

Lot Area and Dimension: 11-9

Lots Divided by Zoning District Boundaries: 4-4

Manufactured home: 5-1, 6-1

Mobile Home Parks: 12-14, 13-2

Mobile Home Subdivisions: 11-10, 13-2

Model Home Sales Office: 13-14

Motor Homes: 11-19, 13-7

Noise: 10-8, 10-10, 10-17, 10-18, 10-19, 10-24, 10-26

Nonconforming Uses: 13-17

Notice Requirements: 3-4, 3-8

Number of Principal Buildings on a Lot: 11-9

Outdoor Light: 11-14

Outdoor Light, Prohibited: 11-16

Overlay Zoning District, HWY 74 Scenic Corridor: 10-27

Overlay Zoning District, Planned Development (PD): 10-10

Overlay Zoning District, Senior Citizens (SC): 10-13

Overlay Zoning District, Westside Military Airbase: 10-15

Overlay Zoning District, Wickenburg Scenic Corridor: 10-19

Planned Area Development (PAD): 10-1

Parking: 11-1

Parking, Additional Regulations: 11-5
Parking, Design: 11-2

Parking, Handicapped: 10-9

Parking, Layout: 11-4

Penalty: 15-2

Plant Nurseries: 5-4, 8-16

Public Hearings: 3-4

Public Way Vacation: 4-4

Purpose: 1-1

Reconsideration of Denied Petition: 3-8

Repeal of Conflicting Ordinances: 1-2

Residential Unit Plan of Development (RUPD): 10-5

Rezoning: 3-4

Riding and Boarding Stables: 13-2

Right of Way, Acquisition: 11-7

Schools: 5-2, 6-1, 6-2, 8-10

Separability Clause: 1-2

Setback Lines: 11-7

Sight Triangle: 11-13

Signs: Chapter 14, 13-8

Special Uses: 13-1

Swimming Pools: 5-5, 6-4, 7-4, 15-4

Temporary Seasonal Sales: 13-15

Title: 1-1

Travel Trailers: 11-19

Uses, Accessory: 11-8

Use, Conditional: 13-13

Uses, Exempted: 13-17

Uses, Nonconforming: 13-17

Uses, Special: 13-1

Use, Temporary: 13-10

Variance: 3-2

Violation: 15-1

Wireless Communication Facilities: 12-8, 13-6

Yard & Space Regulations, Additional: 11-10

Zoning Clearance: 15-4

Zoning Clearance, Expiration of: 15-4

Zoning Clearance, Limitation of: 15-4

Zoning, Conditional: 3-7

Zoning Districts: 4-1

Zoning Districts, Boundaries: 4-3

Zoning Districts, Boundary Lines: 4-3

Zoning districts, Boundary Determination: 4-3

Zoning Districts, Commercial: 8-1

Zoning Districts, Establishment of: 4-1

Zoning Districts, Industrial: 9-1

Zoning Districts, Multiple Family Residential: 7-1

Zoning Districts, Overlay: 10-1

Zoning Districts, Rural: 5-1

Zoning Districts, Single Family Residential: 6-1

Zoning Inspection: 15-1

SECTION 1702. APPENDICES

ARTICLE 1702.1. REQUIREMENTS FOR THE HEIGHT, YARD AND INTENSITY OF USE REGULATIONS FOR RURAL & RESIDENTIAL ZONING DISTRICTS:

ZONING DISTRICT	MAXIMUM BUILDING HEIGHT		MINIMUM YARD REGULATIONS (FEET)				INTENSITY OF USE REGULATIONS				
	STORIES	FEET	FRONT	REAR	INTERIOR SIDE	STREET SIDE	MIN. LOT AREA (SQ. FT.)	MIN. LOT WIDTH (FT.)	MIN. LOT AREA PER DWELLING UNIT (SQ. FT.)	MAX LOT COVERAGE (% OF LOT)	MIN. DIST. BETWEEN BUILDINGS (FT)
RURAL - 190	2	30	60	60	30	30	190,000	300	190,000	5	15
RURAL - 70	2	30	60	60	30	30	70,000	250	70,000	10	15
RURAL - 43	2	30	40	40	30	20	43,560	145	43,560	15	15
R1 - 35	2	30	40	40	20	20	35,000	145	35,000	20	15
R1 - 18	2	30	30	30	10	15	18,000	120	18,000	25	15
R1 - 10	2	30	20	25	7	10	10,000	80	10,000	30	15
R1 - 8	2	30	20	25	7	10	8,000	80	8,000	35	15
R1 - 7	2	30	20	25	5	10	7,000	70	7,000	35	15
R1 - 6	2	30	20	25	5	10	6,000	60	6,000	40	10
R - 2	2	30	20	25	5	10	6,000	60	4,000	50	10
R - 3	3	40	20	25	5	10	6,000	60	3,000	50	10
R - 4	3	40	20	25	5	10	6,000	60	2,000	50	10
R - 5	3	40	20	25	5	10	6,000	60	1,000	50	10

THIS APPENDIX IS ESTABLISHED AS A REFERENCE GUIDE TO THIS ZONING ORDINANCE BUT IT IS NOT AN INTEGRAL PART THEREOF. WHENEVER THERE IS ANY DIFFERENCE IN MEANING OR IMPLICATION BETWEEN THIS APPENDIX AND THE TEXT OF THIS ZONING ORDINANCE, THE TEXT OF THE ZONING ORDINANCE SHALL PREVAIL.

SECTION 1703. REVISIONS/ADDITIONS

AMENDMENT	CHANGES/ADDITIONS/DELETIONS	AFFECTED SECTIONS	DATE
2002-004	**REFORMATTED**	**ALL**	