**AQ-2012-001** – a text amendment to the Maricopa County Air Pollution Control Regulations to add text to a sentence in Rule 100, Section 108 that requires county Air Quality Hearing Board members to not have a substantial interest in any person required to obtain an air pollution permit or subject to enforcement orders issued under the Maricopa County Air Pollution Control Regulations. The verbatim text amendment adopted by the BOS on September 25, 2013 is shown below in legislative format with added language underscored and deleted language struck-through:

## REGULATION I - GENERAL PROVISIONS

## RULE 100

## GENERAL PROVISIONS AND DEFINITIONS

## INDEX


**SECTION 100 - GENERAL**

101 DECLARATION OF INTENT

102 LEGAL AUTHORITY

103 VALIDITY

104 CIRCUMVENTION

105 RIGHT OF INSPECTION OF PREMISES

106 RIGHT OF INSPECTION OF RECORDS

107 ADVISORY COUNCIL

108 HEARING BOARD

109 ANTI-DEGRADATION

110 AVAILABILITY OF POLLUTION INFORMATION

111 ANNUAL REASONABLE FURTHER PROGRESS (RFP) REPORT

112 AVAILABILITY OF INFORMATION

**SECTION 200 - DEFINITIONS**

200.1 AAC

200.2 ACT

200.3 ACTUAL EMISSIONS

200.4 ADMINISTRATOR

200.5 ADVISORY COUNCIL

200.6 AFFECTED FACILITY

200.7 AFFECTED SOURCE

200.8 AFFECTED STATE

200.9 AIR CONTAMINANT

200.10 AIR POLLUTION

200.11 AIR POLLUTION CONTROL EQUIPMENT

200.12 ALLOWABLE EMISSIONS

200.13 AMBIENT AIR

200.14 AP-42

200.15 APPLICABLE IMPLEMENTATION PLAN

200.16 APPLICABLE REQUIREMENT

200.17 APPROVED

200.18 AREA SOURCE

200.19 ARS

200.20 ASME

200.21 ASTM

200.22 ATTAINMENT AREA

200.23 BEGIN ACTUAL CONSTRUCTION

200.24 BEST AVAILABLE CONTROL TECHNOLOGY (BACT)

200.25 BRITISH THERMAL UNIT (BTU)

200.26 BUILDING, STRUCTURE, FACILITY, OR INSTALLATION

200.27 CFR

200.28 CIRCUMSTANCES OUTSIDE THE CONTROL OF THE SOURCE

200.29 CLEAN COAL TECHNOLOGY

200.30 CLEAN COAL TECHNOLOGY DEMONSTRATION PROJECT

200.31 COMMENCE

200.32 COMPLETE

200.33 CONSTRUCTION

200.34 CONTROL OFFICER

200.35 DEPARTMENT

200.36 DIRECTOR

200.37 DISCHARGE

200.38 DIVISION

200.39 DUST GENERATING OPERATION

200.40 EFFLUENT

200.41 ELECTRIC UTILITY STEAM GENERATING UNIT

200.42 EMISSION STANDARD

200.43 EMISSIONS UNIT

200.44 EPA

200.45 EQUIVALENT METHOD

200.46 EXCESS EMISSIONS

200.47 EXISTING SOURCE

200.48 FACILITY

200.59 FEDERAL APPLICABLE REQUIREMENT

200.50 FEDERAL LAND MANAGER

200.51 FEDERALLY ENFORCEABLE

200.52 FINAL PERMIT

200.53 FUEL OIL

200.54 FUGITIVE EMISSION

200.55 HAZARDOUS AIR POLLUTANT REASONABLY AVAILABLE CONTROL TECHNOLOGY (HAPRACT)

200.56 INDIAN GOVERNING BODY

200.57 INDIAN RESERVATION

200.58 INSIGNIFICANT ACTIVITY

200.59 MAJOR MODIFICATION

200.60 MAJOR SOURCE

200.61 MAJOR SOURCE THRESHOLD

200.62 MALFUNCTION

200.63 MATERIAL PERMIT CONDITION

200.64 METHOD OF OPERATION

200.65 MODIFICATION

200.66 NET EMISSIONS INCREASE

200.67 NEW SOURCE

200.68 NITROGEN OXIDES ($NO_X$)

200.69 NONATTAINMENT AREA

200.70 NON-PRECURSOR ORGANIC COMPOUND

200.71 OPEN OUTDOOR FIRE

200.72 OPERATION

200.73 ORGANIC COMPOUND

200.74 ORGANIC LIQUID

200.75 OWNER AND/OR OPERATOR

200.76 PARTICULATE MATTER

200.77 PERMITTING AUTHORITY

200.78 PERSON

200.79 PHYSICAL CHANGE

200.80 $PM_{2.5}$

200.81 $PM_{10}$

200.82 POLLUTANT

200.83 POLLUTION CONTROL PROJECT

200.84 PORTABLE SOURCE

200.85 POTENTIAL TO EMIT

200.86 PROPOSED PERMIT

200.87 PROPOSED FINAL PERMIT

200.88 QUANTIFIABLE

200.89 REACTIVATION OF A VERY CLEAN COAL-FIRED ELECTRIC UTILITY STEAM GENERATING UNIT

200.90 REASONABLY AVAILABLE CONTROL TECHNOLOGY (RACT)

200.91 REFERENCE METHOD

200.92 REGULATED AIR POLLUTANT

200.93 REGULATORY REQUIREMENTS

200.94 REPLICABLE

200.95 REPOWERING

200.96 REPRESENTATIVE ACTUAL ANNUAL EMISSIONS

200.97 RESPONSIBLE OFFICIAL

200.98 SCHEDULED MAINTENANCE

200.99 SIGNIFICANT

200.100 SOLVENT-BORNE COATING MATERIAL

200.101 SOURCE

200.102 SPECIAL INSPECTION WARRANT

200.103 STANDARD CONDITIONS

200.104 STATE IMPLEMENTATION PLAN (SIP)

200.105 STATIONARY SOURCE

200.106 SYNTHETIC MINOR

200.107 TEMPORARY CLEAN COAL TECHNOLOGY DEMONSTRATION PROJECT

200.108 TITLE V

200.109 TOTAL REDUCED SULFUR (TRS)

200.110 TRADE SECRETS

200.111 TRIVIAL ACTIVITY

200.112 UNCLASSIFIED AREA

200.113 VOLATILE ORGANIC COMPOUND (VOC)

**SECTION 300 - STANDARDS**

301 AIR POLLUTION PROHIBITED

302 APPLICABILITY OF MULTIPLE RULES

**SECTION 400 - ADMINISTRATIVE REQUIREMENTS**

401 CERTIFICATION OF TRUTH, ACCURACY, AND COMPLETENESS

402 CONFIDENTIALITY OF INFORMATION

**SECTION 500 - MONITORING AND RECORDS**

501 REPORTING REQUIREMENTS

502 DATA REPORTING

503 EMISSION STATEMENTS REQUIRED AS STATED IN THE ACT

504 RETENTION OF RECORDS

505 ANNUAL EMISSIONS INVENTORY REPORT

**Revised 07/13/88**
**Revised 10/01/90**
**Revised 06/22/92**
**Revised 11/16/92**
**Repealed and Adopted 11/15/93**
**Revised 02/15/95**
**Revised 04/03/96**
**Revised 06/19/96**
**Revised 03/04/98**
**Revised 05/20/98**
**Revised 07/26/00**
**Revised 03/07/01**
**Revised 08/22/01**
**Revised 11/06/02**
**Revised 03/15/06**
**Revised 06/06/07**
**Revised xx/xx/xx**

# MARICOPA COUNTY
# AIR POLLUTION CONTROL REGULATIONS
# REGULATION I - GENERAL PROVISIONS
# RULE 100
# GENERAL PROVISIONS AND DEFINITIONS

## SECTION 100 - GENERAL

**101** **DECLARATION OF INTENT:** The Maricopa County Air Pollution Control Regulations prevent, reduce, control, correct, or remove regulated air pollutants originating within the territorial limits of Maricopa County and carry out the mandates of Arizona Revised Statutes (ARS), Title 49-The Environment.

**102** **LEGAL AUTHORITY:** These rules are adopted under the authority granted by ARS §49-479.

**103** **VALIDITY:** If any section, subsection, clause, phrase, or provision of these rules is held to be invalid for any reason, such decision shall not affect the validity of the remaining portion.

**104** **CIRCUMVENTION:** A person shall not build, erect, install, or use any article, machine, equipment, condition, or any contrivance, the use of which, without resulting in a reduction in the total release of regulated air pollutants to the atmosphere, conceals or dilutes an emission which would otherwise constitute a

violation of these rules. No person shall circumvent these rules to dilute regulated air pollutants by using more emission openings than is considered normal practice by the industry or activity in question.

**105** **RIGHT OF INSPECTION OF PREMISES:** The Control Officer, during reasonable hours, for the purpose of enforcing and administering these rules or any provision of ARS relating to the emission or control prescribed pursuant thereto, may enter every building, premises, or other place, except the interior of structures used as private residences. In the event that consent to enter for inspection purposes has been refused or circumstances justify the failure to seek such consent, special inspection warrants may be issued by a magistrate. Every person is guilty of a petty offense under ARS §49-488 who in any way denies, obstructs, or hampers such entrance or inspection that is lawfully authorized by warrant.

**106** **RIGHT OF INSPECTION OF RECORDS:** When the Control Officer has reasonable cause to believe that any person has violated or is in violation of any provision of this rule, any rule adopted under this rule, or any requirement of a permit issued under this rule, the Control Officer may request, in writing, that such person produce all existing books, records, and other documents evidencing tests, inspections, or studies which may reasonably relate to compliance or non-compliance with rules adopted under this rule. No person shall fail nor refuse to produce all existing documents required in such written request by the Control Officer.

**107** **ADVISORY COUNCIL:** An Advisory Council appointed by the Board of Supervisors may advise and consult with the Board of Supervisors, the Maricopa County Air Quality Department, and the Control Officer in effecting the mandates of ARS Title 49.

**108** **HEARING BOARD:** The Board of Supervisors shall appoint a 5-member hearing board knowledgeable in the field of air pollution. At least three members shall not have a substantial interest, as defined in A.R.S. § 38-502(11), in any person required to obtain an air pollution permit <u>or subject to enforcement orders issued under these rules</u>. Each member shall serve a term of three years.

**109** **ANTI-DEGRADATION:** The standards in these rules shall not be construed as permitting the preventable degradation of air quality in any area of Maricopa County.

**110** **AVAILABILITY OF POLLUTION INFORMATION:** The public shall be informed on a daily basis of average daily concentration of three pollutants: particulates, carbon monoxide, and ozone. This information shall be disseminated through the use of newspapers, radio, and television. The levels of each pollutant shall be expressed through the use of the Air Quality Index (AQI) and a written copy of such information shall be made available at the office of the Maricopa County Air Quality Department, 1001 North Central Avenue, Suite 400, Phoenix, Arizona, 85004, 602-506-6010.

**111** **ANNUAL REASONABLE FURTHER PROGRESS (RFP) REPORT:** A report on the progress in implementation of nonattainment area plans shall be produced by the Department each year. The primary function of the report is to review the implementation schedules for control measures and emission reduction

forecasts in the nonattainment area plans. The annual report will be made available to the public at the offices of Maricopa County Air Quality Department, 1001 North Central Avenue, Suite 400, Phoenix, Arizona, 85004, 602-506-6010.

**112** **AVAILABILITY OF INFORMATION:** Copies of 40 CFR 51, Subpart A, Appendix A, Table 2A are available at 1001 North Central Avenue, Suite 695, Phoenix, Arizona, 85004, or call 602-506-6010 for information.

**SECTION 200 - DEFINITIONS:** To aid in the understanding of these rules, the following general definitions are provided. Additional definitions, as necessary, can be found in each rule of the Maricopa County Air Pollution Control Regulations.

**200.1** **AAC -** Arizona Administrative Code.

**200.2** **ACT -** The Clean Air Act of 1963 (P.L. 88-206; 42 United States Code sections 7401 through 7671), as amended by the Clean Air Act Amendments of 1990 (P.L.101-549).

**200.3** **ACTUAL EMISSIONS -** The actual rate of emissions of a pollutant from an emissions unit, as determined in Section 200.3(a) through Section 200.3(e) of this rule:

**a.** In general, actual emissions as of a particular date shall equal the average rate, in tons per year, at which the emissions unit actually emitted the pollutant during a 2-year period that precedes the particular date and that is representative of normal source operation. The Control Officer may allow the use of a different time period upon a demonstration that it is more representative of normal source operation. Actual emissions shall be calculated using the emissions unit's actual operating hours, production rates, and types of materials processed, stored, or combusted during the selected time period.

**b.** If there is inadequate information to determine actual historical emissions, then the Control Officer may presume that source-specific allowable emissions for the emissions unit are equivalent to the actual emissions of the emissions unit.

**c.** For any emissions unit at a Title V source, other than an electric utility steam generating unit described in Section 200.3(e) of this rule that has not begun normal operations on the particular date, actual emissions shall equal the unit’s potential to emit on that date.

**d.** For any emissions unit at a Non-Title V source that has not begun normal operations on the particular date, actual emissions shall be based on applicable control equipment requirements and projected conditions of operation.

**e.** For an electric utility steam generating unit (other than a new unit or the replacement of an existing unit), actual emissions of the unit, following the physical or operational change,

shall equal the representative actual annual emissions of the unit, if the source owner and/or operator maintains and submits to the Control Officer on an annual basis, for a period of five years from the date the unit resumes regular operation, information demonstrating that the physical or operational change did not result in an emissions increase. A longer period, not to exceed 10 years, may be required by the Control Officer, if the Control Officer determines the longer period to be more representative of normal source post-change operations.

**200.4** **ADMINISTRATOR** - The Administrator of the United States Environmental Protection Agency.

**200.5** **ADVISORY COUNCIL** - The Maricopa County Air Pollution Control Advisory Council appointed by the Maricopa County Board of Supervisors.

**200.6** **AFFECTED FACILITY** - With reference to a stationary source, any apparatus to which a standard is applicable.

**200.7** **AFFECTED SOURCE** - A source that includes one or more emissions units which are subject to emission reduction requirements or limitations under Title IV-Acid Deposition Control of the Act.

**200.8** **AFFECTED STATE** - Any State whose air quality may be affected and that is contiguous to Arizona or that is within 50 miles of the permitted source.

**200.9** **AIR CONTAMINANT** - Includes smoke, vapors, charred paper, dust, soot, grime, carbon, fumes, gases, sulfuric acid mist aerosols, aerosol droplets, odors, particulate matter, windborne matter, radioactive materials, noxious chemicals, or any other material in the outdoor atmosphere.

**200.10** **AIR POLLUTION** - The presence in the outdoor atmosphere of one or more air contaminants, or combinations thereof, in sufficient quantities, which either alone or in connection with other substances, by reason of their concentration and duration, are or tend to be injurious to human, plant, or animal life, or causes damage to property, or unreasonably interferes with the comfortable enjoyment of life or property of a substantial part of a community, or obscures visibility, or which in any way degrades the quality of the ambient air below the standards established by the Board of Supervisors.

**200.11** **AIR POLLUTION CONTROL EQUIPMENT** - Equipment used to eliminate, reduce, or control the emission of air pollutants into the ambient air.

**200.12** **ALLOWABLE EMISSIONS** - The emission rate of a stationary source calculated using the maximum rated capacity of the source (unless the source is subject to federally enforceable limits which restrict the operating rate or hours of operation or both) and the most stringent of the following:

**a.** The applicable New Source Performance Standards as described in Rule 360 of these rules or the Federal Hazardous Air Pollutant Program as described in Rule 370 of these rules; or

**b.** The applicable existing source performance standard as approved for the State Implementation Plan (SIP); or

**c.** The emissions rate specified in any federally promulgated rule or federally enforceable permit condition.

**200.13** **AMBIENT AIR** - That portion of the atmosphere, external to buildings, to which the general public has access.

**200.14** **AP-42** - The EPA document "Compilation of Air Pollutant Emission Factors," as incorporated by reference in Appendix G of these rules.

**200.15** **APPLICABLE IMPLEMENTATION PLAN** - Those provisions of the State Implementation Plan (SIP) approved by the Administrator or a Federal Implementation Plan (FIP) promulgated under Title I-Air Pollution Prevention and Control of the Act.

**200.16** **APPLICABLE REQUIREMENT** - Applicable requirement means any of the following:

**a.** Any federal applicable requirement as defined in Section 200.49 of this rule.

**b.** Any other requirement established under the Maricopa County Air Pollution Control Regulations or ARS Title 49, Chapter 3, Articles 1, 3, 7, and 8.

**200.17** **APPROVED** - Approved in writing by the Maricopa County Air Pollution Control Officer.

**200.18** **AREA SOURCE** - Any stationary source that is not a major source. For purposes of these rules, the term "area source" shall not include motor vehicles or nonroad vehicles subject to regulation under Title II-Emission Standards for Moving Sources of the Act.

**200.19** **ARS** - The Arizona Revised Statutes. The titles of the most frequently used ARS references in these rules are listed below:

| | |
|---|---|
| ARS §38-502(11) | Public Officers and Employees, Conduct of Office, Conflict of Interest of Officers and Employees, Definitions, Substantial Interest |
| ARS Title 49 | The Environment |

| | |
|---|---|
| ARS Title 49, Chapter 3 | The Environment, Air Quality |
| ARS Title 49, Chapter 4 | The Environment, Solid Waste Management |
| ARS §49-109 | The Environment, General Provisions, Department of Environmental Quality, Certificate of Disclosure of Violations; Definition; Remedies |
| ARS §49-401 | The Environment, Air Quality, General Provisions, Declaration of Policy |
| ARS §49-426 | The Environment, Air Quality, State Air Pollution Control, Permits; Duties of Director; Exceptions; Applications; Objections; Fees |
| ARS §49-426.04 | The Environment, Air Quality, State Air Pollution Control, State List of Hazardous Air Pollutants |
| ARS §49-426.05 | The Environment, Air Quality, State Air Pollution Control, Designation of Sources of Hazardous Air Pollutants |
| ARS §49-429 | The Environment, Air Quality, State Air Pollution Control, Permit Transfers; Notice; Appeal |
| ARS §49-464 | The Environment, Air Quality, State Air Pollution Control, Violation; Classification; Penalties; Definition |
| ARS §49-473 | The Environment, Air Quality, County Air Pollution Control, Board of Supervisors |
| ARS §49-476.01 | The Environment, Air Quality, County Air Pollution Control, Monitoring |
| ARS §49-478 | The Environment, Air Quality, County Air Pollution Control, Hearing Board |
| ARS §49-480 | The Environment, Air Quality, County Air Pollution Control, Permits; Fees |
| ARS §49-480.03 | The Environment, Air Quality, County Air Pollution Control, Federal Hazardous Air Pollutant Program; Date Specified By Administrator; Prohibition |
| ARS §49-480.04 | The Environment, Air Quality, County Air Pollution Control, County Program for Control of Hazardous Air Pollutants |
| ARS §49-482 | The Environment, Air Quality, County Air Pollution Control, Appeals to Hearing Board |
| ARS §49-483 | The Environment, Air Quality, County Air Pollution Control, Permit Transfers; Notice; Appeal |
| ARS §49-487 | The Environment, Air Quality, County Air Pollution Control, Classification and Reporting; Confidentiality of Records |

| | |
|---|---|
| ARS §49-488 | The Environment, Air Quality, County Air Pollution Control, Special Inspection Warrant |
| ARS §49-490 | The Environment, Air Quality, County Air Pollution Control, Hearings On Orders of Abatement |
| ARS §49-498 | The Environment, Air Quality, County Air Pollution Control, Notice of Hearing; Publication; Service |
| ARS §49-501 | The Environment, Air Quality, County Air Pollution Control, Unlawful Open Burning; Definition; Exceptions; Fine |
| ARS §49-511 | The Environment, Air Quality, County Air Pollution Control, Violations, Order of Abatement |
| ARS §49-514 | The Environment, Air Quality, County Air Pollution Control, Violation; Classification; Definition |

**200.20** **ASME -** The American Society of Mechanical Engineers.

**200.21** **ASTM -** The American Society for Testing and Materials.

**200.22** **ATTAINMENT AREA -** An area so designated by the Administrator, acting under Section 107-Air Quality Control Regions of the Act, as having ambient air pollutant concentrations equal to or less than national primary or secondary ambient air quality standards for a particular pollutant or pollutants.

**200.23** **BEGIN ACTUAL CONSTRUCTION** - In general, initiation of physical on-site construction activities on an emissions unit, which are of a permanent nature. Such activities include installation of building supports and foundations, laying of underground pipe work, and construction of permanent storage structures. With respect to a change in method of operation, "begin actual construction" refers to those on-site activities, other than preparatory activities, which mark the initiation of the change.

**200.24** **BEST AVAILABLE CONTROL TECHNOLOGY (BACT)** - An emissions limitation, based on the maximum degree of reduction for each pollutant, subject to regulation under the Act, which would be emitted from any proposed stationary source or modification, which the Control Officer, on a case-by-case basis, taking into account energy, environmental, and economic impacts and other costs, determines is achievable for such source or modification through application of production processes or available methods, systems, and techniques, including fuel cleaning or treatment or innovative fuel combination techniques for control of such pollutant. Under no circumstances shall BACT be determined to be less stringent than the emission control required by an applicable provision of these rules or of any State or Federal laws ("Federal laws" include the EPA approved State Implementation Plan (SIP)). If the Control

Officer determines that technological or economic limitations on the application of measurement methodology to a particular emissions unit would make the imposition of an emissions standard infeasible, a design, equipment, work practice, operational standard, or combination thereof may be prescribed instead to satisfy the requirement for the application of BACT. Such standard shall, to the degree possible, set forth the emissions reduction achievable by implementation of such design, equipment, work practice or operation, and shall provide for compliance by means which achieve equivalent results.

**200.25** **BRITISH THERMAL UNIT (BTU)** - The quantity of heat required to raise the temperature of one pound of water one degree Fahrenheit (°F) at 39.1°F.

**200.26** **BUILDING, STRUCTURE, FACILITY, OR INSTALLATION** - All the pollutant-emitting equipment and activities that belong to the same industrial grouping, that are located on one or more contiguous or adjacent properties, and that are under the control of the same person or persons under common control, except the activities of any vessel. Pollutant-emitting activities shall be considered as part of the same industrial grouping if they belong to the same "Major Group" as described in the "Standard Industrial Classification Manual, 1987".

**200.27** **CFR** - The United States Code of Federal Regulations.

**200.28** **CIRCUMSTANCES OUTSIDE THE CONTROL OF THE SOURCE** - Shall include, but not be limited to, circumstances where a violation resulted from a sudden and unavoidable breakdown of the process or the control equipment, resulted from unavoidable conditions during a startup or shutdown, or resulted from upset of operations.

**200.29** **CLEAN COAL TECHNOLOGY** - Any technology, including technologies applied at the pre-combustion, combustion, or post-combustion stage, at a new or existing facility that will achieve significant reductions in air emissions of sulfur dioxide or oxides of nitrogen associated with the utilization of coal in the generation of electricity or process steam that was not in widespread use as of November 15, 1990.

**200.30** **CLEAN COAL TECHNOLOGY DEMONSTRATION PROJECT** - A project using funds appropriated under the heading “Department of Energy-Clean Coal Technology”, up to a total amount of $2,500,000,000 for commercial demonstration of clean coal technology or similar projects, funded through appropriations for the Environmental Protection Agency. The Federal contribution for a qualifying project shall be at least 20% of the total cost of the demonstration project.

**200.31** **COMMENCE** - As applied to construction of a major source or a major modification, that the owner and/or operator has all necessary preconstruction approvals or permits and has either:

**a.** Begun, or caused to begin, a continuous program of actual on-site construction of the source, to be completed within a reasonable time; or

**b.** Entered into binding agreements or contractual obligations, which cannot be canceled or modified without substantial loss to the owner and/or operator, to undertake a program of actual construction of the source to be completed within a reasonable time.

**200.32** **COMPLETE** - In reference to an application for a permit, "complete" means that the application contains all the information necessary for processing the application. Designating an application complete for purposes of permit processing does not preclude the Control Officer from requesting nor from accepting any additional information.

**200.33** **CONSTRUCTION** - Any physical change or change in the method of operation, including fabrication, erection, or installation, demolition, or modification of an emissions unit, which would result in a change in actual emissions.

**200.34** **CONTROL OFFICER** - The executive head of the department authorized or designated to enforce air pollution regulations, the executive head of an air pollution control district established under ARS §49-473, or the designated agent.

**200.35** **DEPARTMENT** - The Maricopa County Air Quality Department.

**200.36** **DIRECTOR** - The director of the Arizona Department of Environmental Quality (ADEQ).

**200.37** **DISCHARGE** - The release or escape of an effluent into the atmosphere from a source.

**200.38** **DIVISION** - The Division no longer exists; consequently, all references in these rules to Division refer to Department.

**200.39** **DUST GENERATING OPERATION** - Any activity capable of generating fugitive dust, including but not limited to, land clearing, earthmoving, weed abatement by discing or blading, excavating, construction, demolition, bulk material handling, storage and/or transporting operations, vehicle use and movement, the operation of any outdoor equipment, or unpaved parking lots. For the purpose of this rule, landscape maintenance and playing on or maintaining a field used for non-motorized sports shall not be considered a dust generating operation. However, landscape maintenance shall not include grading, trenching, or any other mechanized surface disturbing activities performed to establish initial landscapes or to redesign existing landscapes.

**200.40** **EFFLUENT** - Any air contaminant which is emitted and subsequently escapes into the atmosphere.

**200.41** **ELECTRIC UTILITY STEAM GENERATING UNIT** - Any steam electric generating unit that is constructed for the purpose of supplying more than 1/3 of its potential electric output capacity and more than 25 MW electric output to any utility power distribution system for sale. Any steam supplied to a steam distribution system, for the purpose of providing steam to a steam-electric generator that would produce electrical energy for sale, is also considered in determining the electrical energy output capacity of the affected facility.

**200.42** **EMISSION STANDARD** - The definition of emission standard, as summarized from ARS §49-514(T) and ARS §49-464(V), is: A numeric limitation on the volume or concentration of air pollutants in emissions from a source or a specific design, equipment, or work practice standard, the purpose of which is to eliminate or reduce the volume or concentration of pollutants emitted by a source. The term emission standard does not include opacity standards. Violations of emission standards shall be determined in the manner prescribed by the applicable regulations issued by the Administrator or the Director or the Control Officer.

**200.43** **EMISSIONS UNIT** - Any part of a stationary source which emits or would have the potential to emit any regulated air pollutant.

**200.44** **EPA** - The United States Environmental Protection Agency.

**200.45** **EQUIVALENT METHOD** - Any method of sampling and analyzing for an air pollutant, which has been demonstrated to the Administrator's satisfaction to have a consistent and quantitatively known relationship to the reference method, under specified conditions.

**200.46** **EXCESS EMISSIONS** - Emissions of an air pollutant in excess of an emission standard, as measured by the compliance test method applicable to such emission standard.

**200.47** **EXISTING SOURCE** -

**a.** A source in operation prior to the effective date of this rule, or a source on which the construction or modification has commenced and for which the Control Officer has granted a permit prior to the effective date of this rule; or

**b.** When used in conjunction with a source subject to new source performance standards (NSPS), any source which does not have an applicable NSPS under Rule 360-New Source Performance Standards of these rules.

**200.48** **FACILITY** - The definition of facility is included in Section 200.6-Definition of Affected Facility of this rule and in Section 200.26-Definition of Building, Structure, Facility or Installation of this rule.

**200.49** **FEDERAL APPLICABLE REQUIREMENT** - Any of the following as they apply to emissions units covered by a Title V permit or a Non-Title V permit (including requirements that have been promulgated or approved by the EPA through rulemaking at the time of issuance but have future effective compliance dates):

**a.** Any standard or other requirement provided for in the applicable implementation plan approved or promulgated by the EPA through rulemaking under Title I-Air Pollution Prevention and Control of the Act that implements the relevant requirements of the Act, including any revisions to that plan promulgated in 40 CFR 52.

**b.** Any term or condition of any unitary permits issued under regulations approved or promulgated through rulemaking under Title I-Air Pollution Prevention and Control, including Parts C or D, of the Act.

**c.** Any standard or other requirement under Section 111-Standards of Performance for New Stationary Sources of the Act, includes Section 111(d).

**d.** Any standard or other requirement under Section 112-National Emission Standards for Hazardous Air Pollutants of the Act, including any requirement concerning accident prevention under Section 112(r)(7) of the Act.

**e.** Any standard or other requirement of the acid rain program under Title IV-Acid Deposition Control of the Act or the regulations promulgated thereunder and incorporated under Rule 371-Acid Rain of these rules.

**f.** Any requirements established under Section 504(b)-Permit Requirements and Conditions or Section 114(a)(3)-Inspections, Monitoring, and Entry of the Act.

**g.** Any standard or other requirement governing solid waste incineration under Section 129-Solid Waste Combustion of the Act.

**h.** Any standard or other requirement for consumer and commercial products pursuant to Section 183(e)-Federal Ozone Measures of the Act.

**i.** Any standard or other requirement for tank vessels pursuant to Section 183(f)-Federal Ozone Measures of the Act.

**j.** Any standard or other requirement of the program to control air pollution from outer continental shelf sources under Section 328-Air Pollution From Outer Continental Shelf Activities of the Act.

**k.** Any standard or other requirement of the regulations promulgated to protect stratospheric ozone under Title VI-Stratospheric Ozone Protection of the Act, unless the Administrator has determined that such requirements need not be contained in a Title V permit; and

**l.** Any national ambient air quality standard or increment or visibility requirement under Part C-Prevention of Significant Deterioration of Air Quality of Title I-Air Pollution Prevention and Control of the Act, but only as it would apply to temporary sources permitted under Section 504(e)-Permit Requirements and Conditions of the Act.

**200.50** **FEDERAL LAND MANAGER** - With respect to any lands in the United States, the Secretary of The Department with authority over such lands.

**200.51** **FEDERALLY ENFORCEABLE** -

**a.** All terms and conditions contained in a Title V permit, except those terms and conditions which have been specifically designated as not federally enforceable;

**b.** The requirements of operating permit programs and permits issued under such permit programs which have been approved by the Administrator, including the requirements of State and County operating permit programs approved under Title V-Permits of the Act or under any new source review permit program;

**c.** All limitations and conditions which are enforceable by the Administrator, including the requirements of the New Source Performance Standards (NSPS) and the National Emissions Standards for Hazardous Air Pollutants (NESHAPs) contained in these rules;

**d.** The requirements of such other State or County rules or regulations approved by the Administrator for inclusion in the State Implementation Plan (SIP);

**e.** The requirements of any federal regulation promulgated by the Administrator as part of the State Implementation Plan (SIP); and

**f.** The requirements of State and County operating permit programs, other than Title V programs, which have been approved by the Administrator and incorporated into the applicable State Implementation Plan (SIP) under the criteria for federally enforceable State Operating Permit Programs set forth in 54, Federal Register 27274, dated June 28, 1989. Such requirements include permit terms and conditions which have been entered into voluntarily by a source under this rule and/or under Rule 220-Non-Title V Permit Provisions of these rules.

**200.52** **FINAL PERMIT** - The version of a permit issued by the Control Officer after completion of all review required by Maricopa County Air Pollution Control Regulations.

**200.53** **FUEL OIL** - Number 2 through Number 6 fuel oils as specified in ASTM D-396-90a-Specification for Fuel Oils, gas turbine fuel oils Numbers 2-GT through 4-GT as specified in ASTM D-2880-90a-Specification for Gas Turbine Fuel Oils, or diesel fuel oils Numbers 2-D and 4-D as specified in ASTM D-975-90a-Specification for Diesel Fuel Oils.

**200.54** **FUGITIVE EMISSION** - Any emission which could not reasonably pass through a stack, chimney, vent, or other functionally equivalent opening.

**200.55** **HAZARDOUS AIR POLLUTANT REASONABLY AVAILABLE CONTROL TECHNOLOGY (HAPRACT)** An emissions standard for hazardous air pollutants which the Control Officer, acting pursuant to §49-480.04(C), determines is reasonably available for a source. In making the foregoing determination, the Control Officer shall take into consideration the estimated actual air quality impact of the standard, the cost of complying with the standard, the demonstrated reliability and widespread use of the technology required to meet the standard, and any non-air quality health and environmental impacts and energy requirements. For purposes of this definition, an emissions standard may be expressed as a numeric emissions limitation or as a design, equipment, work practice, or operational standard.

**200.56** **INDIAN GOVERNING BODY** - The governing body of any tribe, band, or group of Indians subject to the jurisdiction of the United States and recognized by the United States as possessing power of self-government.

**200.57** **INDIAN RESERVATION** - Any federally recognized reservation established by Treaty, Agreement, Executive Order, or Act of Congress.

**200.58** **INSIGNIFICANT ACTIVITY** – For the purpose of this rule, an insignificant activity shall be any activity, process, or emissions unit that is not subject to a source-specific applicable requirement, that emits no more than 0.5 ton per year of hazardous air pollutants (HAPs) and no more than two tons per year of a regulated air pollutant, and that is either included in Appendix D-List of Insignificant Activities of these rules or is approved as an insignificant activity under Rule 200-Permit Requirements of these rules. Source-specific applicable requirements include requirements for which emissions unit-specific information is needed to determine applicability.

**200.59** **MAJOR MODIFICATION** - Any physical change or change in the method of operation of a major source that would result in a significant net emissions increase of any regulated air pollutant.

**a.** Any net emissions increase that is significant for VOCs shall be considered significant for ozone.

**b.** Any net emissions increase that is significant for oxides of nitrogen shall be considered significant for ozone nonattainment areas classified as marginal, moderate, serious, or severe.

**c.** For the purposes of this definition, the following shall not be considered a physical change or a change in the method of operation:

**(1)** Routine maintenance, repair, and replacement;

**(2)** Use of an alternative fuel or raw material by reason of an order under Sections 2(a) and (b) of the Energy Supply and Environmental Coordination Act of 1974, 15 U.S.C. §792, or by reason of a natural gas curtailment plan under the Federal Power Act, 16 U.S.C. §792 - 825r;

**(3)** Use of an alternative fuel by reason of an order or rule under Section 125-Measures to Prevent Economic Disruption or Unemployment of the Act;

**(4)** Use of an alternative fuel at a steam generating unit to the extent that the fuel is generated from municipal solid waste;

**(5)** Use of an alternative fuel or raw material by a stationary source that either:

**(a)** The source was capable of accommodating before December 12, 1976, unless the change would be prohibited under any federally enforceable permit condition established after December 12, 1976, under 40 CFR 52.21, or under Rule 200-Permit Requirements, Rule 210-Title V Permit Provisions, Rule 240-Permits for New Major Sources and Major Modifications to Existing Major Sources, Rule 245-Continuous Source Emission Monitoring, and Rule 270-Performance Tests of these rules; or

**(b)** The source is approved to use under any permit issued under 40 CFR 52.21, or under Rule 200-Permit Requirements, Rule 210-Title V Permit Provisions, Rule 240-Permits for New Major Sources and Major Modifications to Existing Major Sources, Rule 245-Continuous Source Emission Monitoring, and Rule 270-Performance Tests of these rules;

**(6)** An increase in the hours of operation or in the production rate, unless the change would be prohibited under any federally enforceable permit condition established after December 12, 1976, under 40 CFR 52.21, or under Rule 200-Permit Requirements, Rule 210-Title V Permit Provisions, Rule 240-Permits for New Major Sources and Major Modifications to Existing Major Sources, Rule 245-Continuous Source Emission Monitoring, and Rule 270-Performance Tests of these rules;

**(7)** Any change in ownership at a stationary source;

**(8)** The addition, replacement, or use of a pollution control project at an existing electric utility steam generating unit, unless the Control Officer determines that the addition, replacement, or use renders the unit less environmentally beneficial, or except:

**(a)** When the Control Officer has reason to believe that the pollution control project would result in a significant net increase in representative actual annual emissions of any criteria pollutant over levels used for that source in the most recent Title I air quality impact analysis in the area, if any, and

**(b)** The Control Officer determines that the increase will cause or contribute to a violation of any national ambient air quality standard, prevention of significant deterioration (PSD) increment, or visibility limitation;

**(9)** The installation, operation, cessation, or removal of a temporary clean coal technology demonstration project, if the project complies with:

**(a)** The State Implementation Plan (SIP); and

**(b)** Other requirements necessary to attain and maintain the national ambient air quality standards during the project and after it is terminated;

**(10)** For electric utility steam generating units located in attainment and unclassified areas only, the installation or operation of a permanent clean coal technology demonstration project that constitutes repowering, if the project does not result in an increase in the potential to emit of any regulated pollutant emitted by the unit. This exemption shall apply on a pollutant-by-pollutant basis; and

**(11)** For electric utility steam generating units located in attainment and unclassified areas only, the reactivation of a very clean coal-fired electric utility steam generating unit.

**200.60 MAJOR SOURCE -**

**a.** A major source as defined in Rule 240-Permits for New Major Sources and Major Modifications to Existing Major Sources of these rules;

**b.** A major source under Section 112-National Emission Standards for Hazardous Air Pollutants of the Act:

**(1)** For pollutants other than radionuclides, any stationary source that emits or has the potential to emit, in the aggregate, including fugitive emissions, 10 tons per year (tpy) or more of any hazardous air pollutant which has been listed under Section 112(b) of the Act, 25 tpy or more of any combination of such hazardous air pollutants, or such lesser quantity as described in Title 18-Environmental Quality, Chapter 2-Department of Environmental Quality Air Pollution Control, Article 11-Federal Hazardous Air Pollutants of the Arizona Administrative Code. Notwithstanding the preceding sentence, emissions from any oil or gas exploration or production well (with its associated equipment) and emissions from any

pipeline compressor or pump station shall not be aggregated with emissions from other similar units, whether or not such units are in a contiguous area or under common control, to determine whether such units or stations are major sources; or

**(2)** For radionuclides, major source shall have the meaning specified by the Administrator by rule.

**c.** A major stationary source, as defined in Section 302-Definitions of the Act, that directly emits or has the potential to emit 100 tpy or more of any air pollutant, including any major source of fugitive emissions of any such pollutant. The fugitive emissions of a stationary source shall not be considered in determining whether it is a major stationary source for the purpose of Section 302(j) of the Act, unless the source belongs to one of the following categories of stationary source:

Coal cleaning plants (with thermal dryers).

Kraft pulp mills.

Portland cement plants.

Primary zinc smelters.

Iron and steel mills.

Primary aluminum ore reduction plants.

Primary copper smelters.

Municipal incinerators capable of charging more than 50 tons of refuse per day.

Hydrofluoric, sulfuric, or nitric acid plants.

Petroleum refineries.

Lime plants.

Phosphate rock processing plants.

Coke oven batteries.

Sulfur recovery plants.

Carbon black plants (furnace process).

Primary lead smelters.

Fuel conversion plants.

Sintering plants.

Secondary metal production plants.

Chemical process plants.

Fossil-fuel boilers (or combination thereof) totaling more than 250 million BTU per hour heat input.

Petroleum storage and transfer units with a total storage capacity exceeding 300,000 barrels.

Taconite ore processing plants.

Glass fiber processing plants.

Charcoal production plants.

Fossil fuel-fired steam electric plants of more than 250 million BTU per hour rated heat input.

Any other stationary source category which, as of August 7, 1980, is being regulated under Section 111-Standards of Performance for New Stationary Sources of the Act or under Section 112-National Emission Standards for Hazardous Air Pollutants of the Act.

**200.61** **MAJOR SOURCE THRESHOLD** – The lowest applicable emissions rate for a pollutant that would cause the source to be a major source, at the particular time and location, under Section 200.60-Definition of Major Source of this rule.

**200.62** **MALFUNCTION** - Any sudden and unavoidable failure of air pollution control equipment, process, or process equipment to operate in a normal and usual manner. Failures that are caused by poor maintenance, careless operation, or any other upset condition or equipment breakdown which could have been prevented by the exercise of reasonable care shall not be considered malfunctions.

**200.63** **MATERIAL PERMIT CONDITION** -

**a.** For the purposes of ARS §49-464(G) and ARS §49-514(G), a material permit condition shall mean a condition which satisfies all of the following:

**(1)** The condition is in a permit or permit revision issued by the Control Officer or by the Director after the effective date of this rule.

**(2)** The condition is identified within the permit as a material permit condition.

**(3)** The condition is one of the following:

**(a)** An enforceable emission standard imposed to avoid classification as a major modification or major source or to avoid triggering any other applicable requirement.

**(b)** A requirement to install, operate, or maintain a maximum achievable control technology or hazardous air pollutant reasonably available control technology required under Rule 372-Maricopa County Hazardous Air Pollutants (HAPs) Program of these rules.

**(c)** A requirement for the installation or certification of a monitoring device.

**(d)** A requirement for the installation of air pollution control equipment.

**(e)** A requirement for the operation of air pollution control equipment.

**(f)** An opacity standard required by Section 111-Standards of Performance for New Stationary Sources of the Act or Title I-Air Pollution Prevention and Control, Part C or D, of the Act.

**(4)** Violation of the condition is not covered by Subsections (A) through (F) or (H) through (J) of ARS §49-464 or Subsections (A) through (F) or (H) through (J) of ARS §49-514.

**b.** For the purposes of Sections 200.63(a)(3)(c), (d), and (e) of this rule, a permit condition shall not be material where the failure to comply resulted from circumstances which were outside the control of the source.

**200.64** **METHOD OF OPERATION** - The definition of method of operation is included in Section 200.72-Definition of Operation of this rule.

**200.65** **MODIFICATION** - A physical change in or a change in the method of operation of a source which increases the actual emissions of any regulated air pollutant emitted by such source by more than any relevant deminimis amount, or which results in the emission of any regulated air pollutant not previously emitted by more than such deminimis amount.

**200.66** **NET EMISSIONS INCREASE** -

**a.** The amount by which the sum of Section 200.66(a)(1) and Section 200.66(a)(2) below exceed zero:

**(1)** Any increase in actual emissions from a particular physical change or change in the method of operation at a stationary source; and

**(2)** Any other increases and decreases in actual emissions at the source that are contemporaneous with the particular change and are otherwise creditable.

**b.** An increase or decrease in actual emissions is contemporaneous with the increase from the particular change only if it occurs between:

**(1)** The date five years before construction on the particular change commences; and

**(2)** The date that the increase from the particular change occurs.

**c.** An increase or decrease in actual emissions is creditable only if the Control Officer has not relied on it in issuing a permit, which is in effect when the increase in actual emissions from the particular change occurs. In addition, in nonattainment areas, a decrease in actual emissions shall be considered in determining net emissions increase due to modifications only if the State has not relied on it in demonstrating attainment or reasonable further progress.

**d.** An increase or decrease in actual emissions of sulfur dioxide, nitrogen oxides, or particulate matter which occurs before the applicable baseline date, as described in Rule 500-Attainment Area Classification of these rules, is creditable only if it is required to be considered in calculating the amount of maximum allowable increases remaining available.

**e.** An increase in actual emissions is creditable only to the extent that the new level of actual emissions exceeds the old level.

**f.** A decrease in actual emissions is creditable only to the extent that:

**(1)** The old level of actual emissions or the old level of allowable emissions, whichever is lower, exceeds the new level of actual emissions;

**(2)** The emissions unit was actually operated and emitted the specific pollutant;

**(3)** It is federally enforceable at and after the time that actual construction on the particular change begins; and

**(4)** It has approximately the same qualitative significance for public health and welfare as that attributed to the increase from the particular change.

**g.** An increase that results from a physical change at a source occurs when the emissions unit on which construction occurred becomes operational and begins to emit a particular pollutant. Any replacement unit that requires shakedown becomes operational only after a reasonable shakedown period, not to exceed 180 days.

**200.67** **NEW SOURCE** - Any source that is not an existing source.

**200.68** **NITROGEN OXIDES ($NO_X$) -** All oxides of nitrogen except nitrous oxide, as measured by test methods set forth in the Appendices to 40 CFR 60.

**200.69** **NONATTAINMENT AREA** - An area so designated by the Administrator, acting under Section 107-Air Quality Control Regions of the Act, as exceeding national primary or secondary ambient air standards for a particular pollutant or pollutants.

**200.70** **NON-PRECURSOR ORGANIC COMPOUND** -

**a.** Any of the following organic compounds that have been designated by the EPA as having negligible photo-chemical reactivity:

| | |
|---|---|
| 67-64-1 | Acetone; |
| 74-82-8 | Methane; |
| 74-84-0 | Ethane; |
| 75-09-2 | Methylene chloride (dichloromethane); |
| 71-55-6 | 1,1,1-trichloroethane (methyl chloroform); |

| | |
|---|---|
| 75-69-4 | Trichlorofluoromethane (CFC-11); |
| 75-71-8 | Dichlorodifluoromethane (CFC-12); |
| 75-45-6 | Chlorodifluoromethane (HCFC-22); |
| 76-13- | 1 1,1,2-trichloro-1,2,2-trifluoroethane (CFC-113); |
| 6-14-2 | 1,2-dichloro-1,1,2,2-tetrafluoroethane (CFC-114); |
| 6-15-3 | Chloropentafluoroethane (CFC-115); |
| 5-46-7 | Trifluoromethane (HFC-23); |
| 06-83-2 | 1,1,1-trifluoro 2,2-dichloroethane (HCFC-123); |
| 837-89-0 | 2-chloro-1,1,1,2-tetrafluoroethane (HCFC-124); |
| 717-00-6 | 1,1-dichloro-1-fluoroethane (HCFC-141b); |
| 5-68-3 | 1-chloro-1,1-difluoroethane (HCFC-142b); |
| 34-33-6 | Pentafluoroethane (HFC-125); |
| 354-25-6 | 1,1,2,2-tetrafluoroethane (HFC-134); |
| 811-97-2 | 1,1,1,2-tetrafluoroethane (HFC-134a); |
| 420-46-2 | 1,1,1-trifluoroethane (HFC-143a); |
| 75-37-6 | 1,1-difluoroethane (HFC-152a); |
| 98-56-6 | Parachlorobenzotrifluoride (PCBTF); |
| 127-18-4 | Perchloroethylene (tetrachloroethylene); |
| 422-56-0 | 3,3-dichloro-1,1,1,2,2-pentafluoropropane (HCFC-225ca); |
| 507-55-1 | 1,3-dichloro-1,1,2,2,3-pentafluoropropane (HCFC-225cb); |
| | 1,1,1,2,3,4,4,5,5,5-decafluoropentane (HFC 43-10mee); |
| 75-10-5 | Difluoromethane (HFC-32); |
| 353-36-6 | Ethylfluoride (HFC-161); |
| 690-39-1 | 1,1,1,3,3,3-hexafluoropropane (HFC-236fa); |
| 678-86-7 | 1,1,2,2,3-pentafluoropropane (HFC-245ca); |
| 460-73-1 | 1,1,2,3,3-pentafluoropropane (HFC-245ea); |
| 431-31-2 | 1,1,1,2,3-pentafluoropropane (HFC-245eb); |
| | 1,1,1,3,3-pentafluoropropane (HFC-245fa); |
| 431-63-0 | 1,1,1,2,3,3-hexafluoropropane (HFC-236ea); |
| | 1,1,1,3,3-pentafluorobutane (HFC-365mfc); |
| 593-70-4 | Chlorofluoromethane (HCFC-31); |
| 1615-75-4 | 1-chloro-1-fluoroethane (HCFC-151a); |
| 354-23-4 | 1,2-dichloro-1,1,2-trifluoroethane (HCFC-123a); |
| 163702-07-6 | 1,1,1,2,2,3,3,4,4-nonafluoro-4-methoxy-butane ($C_4F_9OCH_3$) (HFE-7100); |
| | 2-(difluoromethoxymethyl)-1,1,1,2,3,3,3-heptafluoropropane ($(CF_3)_2CFCF_2OCH_3$); |

| | |
|---|---|
| 163702-05-41 | -ethoxy-1,1,2,2,3,3,4,4,4-nonafluorobutane ($C_4F_9OC_2H_5$) (HFE-7200); |
| | 2-(ethoxydifluoromethyl)-1,1,1,2,3,3,3-heptafluoropropane ($(CF_3)_2CFCF_2OC_2H_5$); |
| 79-20-9 | methyl acetate; |
| | cyclic, branched, or linear completely methylated siloxanes; |
| 375-03-1 | 1,1,1,2,2,3,3-heptafluoro-3-methoxy-propan (n-$C_3F_7OCH_3$,HFE-7000); |
| 431-89-0 | 1,1,1,2,3,3,3-heptafluoropropane (HFC 227ea); |
| 107-31-3 | methyl formate ($HCOOCH_3$); |
| | and perfluorocarbon compounds that fall into these classes: |
| | Cyclic, branched, or linear, completely fluorinated alkanes; |
| | Cyclic, branched, or linear, completely fluorinated ethers with no unsaturations; Cyclic, branched, or linear, completely fluorinated tertiary amines with no unsaturations; and |
| | Sulfur containing perfluorocarbons with no unsaturations and with sulfur bonds only to carbon and fluorine. |

**b.** The following compound(s) are VOC for purposes of all recordkeeping, emissions reporting, photochemical dispersion modeling, and inventory requirements, which apply to VOC and shall be uniquely identified in emission reports but are not VOC for purposes of VOC emissions limitations or VOC content requirements: t-butyl acetate (540-88-5).

**200.71** **OPEN OUTDOOR FIRE** - Any combustion of material of any type outdoors, where the products of combustion are not directed through a flu.

**200.72** **OPERATION** - Any physical action resulting in a change in the location, form, or physical properties of a material, or any chemical action resulting in a change in the chemical composition or properties of a material.

**200.73** **ORGANIC COMPOUND** - Any compound of carbon, excluding carbon monoxide, carbon dioxide, carbonic acid, metallic carbides or carbonates, and ammonium carbonate.

**200.74** **ORGANIC LIQUID** - Any organic compound which exists as a liquid under any actual conditions of use, transport, or storage.

**200.75** **OWNER AND/OR OPERATOR** - Any person who owns, leases, operates, controls, or supervises an affected facility or a stationary source of which an affected facility is a part.

**200.76** **PARTICULATE MATTER** - Any material, except condensed water containing no more than analytical trace amounts of other chemical elements or compounds, which has a nominal aerodynamic diameter smaller than 100 microns (micrometers) and which exists in a finely divided form as a liquid or solid at actual conditions.

**200.77** **PERMITTING AUTHORITY** - The department or a County department or agency that is charged with enforcing a permit program adopted under ARS §49-480, Subsection A.

**200.78** **PERSON** - Any individual, public or private corporation, company, partnership, firm, association or society of persons, the Federal Government and any of its departments or agencies, or the State and any of its agencies, departments or political subdivisions.

**200.79** **PHYSICAL CHANGE** - Any replacement, addition, or alteration of equipment that is not already allowed under the terms of the source's permit.

**200.80** **$PM_{2.5}$** - Particulate matter with an aerodynamic diameter less than or equal to a nominal 2.5 microns (micrometers), as measured by the applicable State and Federal Reference Test Methods.

**200.81** **$PM_{10}$** - Particulate matter with an aerodynamic diameter less than or equal to a nominal 10 microns (micrometers), as measured by the applicable State and Federal Reference Test Methods.

**200.82** **POLLUTANT** – An air contaminant the emissions or ambient concentration of which is regulated under these rules.

**200.83** **POLLUTION CONTROL PROJECT** - Any activity or project undertaken at an existing electric utility steam generating unit to reduce emissions from the unit. The activities or projects are limited to:

**a.** The installation of conventional or innovative pollution control technology, including but not limited to advanced flue gas desulfurization, sorbent injection for sulfur dioxide and nitrogen oxides controls, and electrostatic precipitators;

**b.** An activity or project to accommodate switching to a fuel less polluting than the fuel used before the activity or project, including but not limited to natural gas or coal reburning, or the co-firing of natural gas and other fuels for the purpose of controlling emissions;

**c.** A permanent clean coal technology demonstration project, conducted under Title II, Section 101(d) of the Further Continuing Appropriation Act of 1985 (42 U.S.C. 5903(d)) or subsequent appropriations up to a total amount of $2,500,000,000 for commercial

demonstration of clean coal technology, or similar projects funded through appropriations for the EPA; or

**d.** A permanent clean coal technology demonstration project that constitutes a repowering project.

**200.84 PORTABLE SOURCE** – Any stationary source that is capable of being transported and operated in more than one county of this state.

**200.85 POTENTIAL TO EMIT** - The maximum capacity of a stationary source to emit pollutants, excluding secondary emissions, under its physical and operational design. Any physical or operational limitation on the capacity of the source to emit a pollutant, including air pollution control equipment and restrictions on hours of operation or on the type or amount of material combusted, stored, or processed, shall be treated as part of its design, if the limitation or the effect it would have on emissions is federally enforceable.

**200.86 PROPOSED PERMIT** - The version of a permit for which the Control Officer offers public participation under Rule 210-Title V Permit Provisions of these rules or offers affected State review under Rule 210-Title V Permit Provisions of these rules.

**200.87 PROPOSED FINAL PERMIT** - The version of a Title V permit that the Control Officer proposes to issue and forwards to the Administrator for review, in compliance with Rule 210-Title V Permit Provisions of these rules.

**200.88 QUANTIFIABLE** - With respect to emissions, including the emissions involved in equivalent emission limits and emission trades, capable of being measured or otherwise determined in terms of quantity and assessed in terms of character. Quantification may be based on emission factors, stack tests, monitored values, operating rates and averaging times, materials used in a process or production, modeling, or other reasonable measurement practices.

**200.89 REACTIVATION OF A VERY CLEAN COAL-FIRED ELECTRIC UTILITY STEAM GENERATING UNIT** - Any physical change or change in the method of operation, associated with commencing commercial operations by a coal-fired utility unit after a period of discontinued operation, if the unit:

**a.** Has not been in operation for the 2-year period before enactment of the Clean Air Act Amendments of 1990 and the emissions from the unit continue to be carried in the Maricopa County emissions inventory at the time of enactment;

**b.** Was equipped before shutdown with a continuous system of emissions control that achieves a removal efficiency for sulfur dioxide of no less than 85% and a removal efficiency for particulates of no less than 98%;

**c.** Is equipped with low nitrogen oxides ($NO_x$) burners before commencement of operations following reactivation; and

**d.** Is otherwise in compliance with the Act.

**200.90** **REASONABLY AVAILABLE CONTROL TECHNOLOGY (RACT)** - For facilities subject to Regulation III-Control of Air Contaminants of these rules, the emissions limitation of the existing source performance standard. For facilities not subject to Regulation III-Control of Air Contaminants of these rules, the lowest emission limitation that a particular source is capable of achieving by the application of control technology that is reasonably available considering technological and economic feasibility. Such technology may previously have been applied to a similar, but not necessarily identical, source category. RACT for a particular facility, other than a facility subject to Regulation III-Control of Air Contaminants of these rules, is determined on a case-by-case basis, considering the technological feasibility and cost-effectiveness of the application of the control technology to the source category.

**200.91** **REFERENCE METHOD** - Any of the methods of sampling and analyzing for an air pollutant as described in the Arizona Testing Manual for Air Pollutant Emissions; 40 CFR 50, Appendices A through L; 40 CFR 52, Appendices D and E; 40 CFR 60, Appendices A through F; and 40 CFR 61, Appendices B and C.

**200.92** **REGULATED AIR POLLUTANT** - Any of the following:

**a.** Any conventional air pollutant as defined in ARS §49-401.01, which means any pollutant for which the Administrator has promulgated a primary or a secondary national ambient air quality standard (NAAQS) (i.e., for carbon monoxide (CO), nitrogen oxides ($NO_X$), lead, sulfur oxides ($SO_X$) measured as sulfur dioxides ($SO_2$), ozone, and particulates).

**b.** Nitrogen oxides ($NO_X$) and volatile organic compounds (VOCs).

**c.** Any air contaminant that is subject to a standard contained in Rule 360-New Source Performance Standards of these rules or promulgated under Section 111-Standards of Performance for New Stationary Sources of the Act.

**d.** Any hazardous air pollutant (HAP) as defined in Rule 372-Maricopa County Hazardous Air Pollutants (HAPs) Program of these rules.

**e.** Any Class I or II substance listed in Section 602-Stratospheric Ozone Protection; Listing of Class I and Class II Substances of the Act.

**200.93** **REGULATORY REQUIREMENTS** - All applicable requirements, Department rules, and all State requirements pertaining to the regulation of air contaminants.

**200.94** **REPLICABLE** - With respect to methods or procedures sufficiently unambiguous such that the same or equivalent results would be obtained by the application of the method or procedure by different users.

**200.95** **REPOWERING** - The Control Officer shall give expedited consideration to permit applications for any source that satisfies the following criteria and that is granted an extension under Section 409-Repowered Sources of the Act:

**a.** Repowering means replacing an existing coal-fired boiler with one of the following clean coal technologies:

**(1)** Atmospheric or pressurized fluidized bed combustion;

**(2)** Integrated gasification combined cycle;

**(3)** Magnetohydrodynamics;

**(4)** Direct and indirect coal-fired turbines;

**(5)** Integrated gasification fuel cells; or

**(6)** As determined by the Administrator, in consultation with the United States Secretary of Energy, a derivative of one or more of the above listed technologies; and

**(7)** Any other technology capable of controlling multiple combustion emissions simultaneously with improved boiler or generation efficiency and with significantly greater waste reduction relative to the performance of technology in widespread commercial use as of November 15, 1990.

**b.** Repowering also includes any oil, gas, or oil and gas-fired units which have been awarded clean coal technology demonstration funding as of January 1, 1991 by the United States Department of Energy.

**200.96** **REPRESENTATIVE ACTUAL ANNUAL EMISSIONS** - The average rate, in tons per year, at which the source is projected to emit a pollutant for the 2-year period after a physical change or change in the method of operation of a unit (or a different consecutive 2-year within 10 years after that change, if the Control Officer determines that the different period is more representative of source operations), considering the effect the change will have on increasing or decreasing the hourly emission rate and on projected capacity utilization. In projecting future emissions, the Control Officer shall:

**a.** Consider all relevant information, including but not limited to historical operational data, the company's representations, filings with the Maricopa County, State or Federal regulatory authorities, and compliance plans under Title IV-Acid Deposition Control of the Act; and

**b.** Exclude, in calculating any increase in emissions that result from the particular physical change or change in the method of operation at an electric utility steam generating unit, that portion of the unit's emissions, following the change, that could have been accommodated during the representative baseline period and that is attributable to an increase in projected capacity utilization at the unit unrelated to the particular change, including any increased utilization due to the rate of electricity demand growth for the utility system as a whole.

**200.97** **RESPONSIBLE OFFICIAL -** One of the following:

**a.** For a corporation: A president, secretary, treasurer, or vice-president of the corporation in charge of a principal business function, or any other person who performs similar policy or decision-making functions for the corporation, or a duly authorized representative of such person if the representative is responsible for the overall operation of one or more manufacturing, production, or operating facilities applying for or subject to a permit and either;

**(1)** The sources employ more than 250 persons or have gross annual sales or expenditures exceeding $25 million (in second quarter 1980 dollars); or

**(2)** The delegation of authority to such representatives is approved in advance by the permitting authority;

**b.** For a partnership or sole proprietorship: A general partner or the proprietor, respectively;

**c.** For a municipality, State, Federal, or other public agency: Either a principal executive officer or ranking elected official. For the purposes of this rule, a principal executive officer of a Federal agency includes the chief executive officer having responsibility for the overall operations of a principal geographic unit of the agency (e.g., a Regional Administrator); or

**d.** For affected sources:

**(1)** The designated representative insofar as actions, standards, requirements, or prohibitions under Title IV-Acid Deposition Control of the Act or the regulations promulgated thereunder are concerned; and

**(2)** The designated representative for any other purposes under 40 CFR, Part 70.

**200.98** **SCHEDULED MAINTENANCE -** Preventive maintenance undertaken in order to avoid a potential breakdown or upset of air pollution control equipment.

**200.99** **SIGNIFICANT -**

**a.** In reference to a net emissions increase or the potential of a source to emit any of the following pollutants, a rate of emissions that would equal or exceed any one of the following rates:

| Pollutant | Emissions Rate (TPY) |
|---|---|
| Carbon Monoxide | 100 |
| Nitrogen Oxides | 40 |
| Sulfur Dioxide | 40 |
| Particulate Matter | 25 |
| $PM_{10}$ | 15 |
| VOC | 40 |
| Lead | 0.6 |
| Fluorides | 3 |
| Sulfuric Acid Mist | 7 |
| Hydrogen Sulfide ($H_2S$) | 10 |
| Total Reduced Sulfur (including hydrogen sulfide) | 10 |
| Reduced Sulfur Compounds (including hydrogen sulfide) | 10 |
| Municipal waste combustor organics (measured as total tetra-through-octa-chlorinated: dibenzo-p-dioxins and dibenzofurans) | $3.5 \times 10^{-6}$ |
| Municipal waste combustor metals (measured as particulate matter) | 15 |
| Municipal waste combustor acid gases (measured as sulfur dioxide and hydrogen chloride) | 40 |
| Municipal solid waste landfill emissions (measured as nonmethane organic compounds) | 50 |

**b.** In ozone nonattainment areas classified as serious or severe, significant emissions of VOC shall be determined under Rule 240-Permit Requirements For New Major Sources and Major Modifications to Existing Major Sources of these rules.

**c.** In reference to a regulated air pollutant that is not listed in Section 200.99(a) of this rule, is not a Class I nor a Class II substance listed in Section 602-Listing of Class I and Class II Substances of the Act and is not a hazardous air pollutant according to Rule 372-Maricopa County Hazardous Air Pollutants (HAPs) Program of these rules, any emissions rate.

**d.** Notwithstanding the emission amount listed in Section 200.99(a) of this rule, any emissions rate or any net emissions increase associated with a major source or major modification, which would be constructed within 10 kilometers (6.2 miles) of a Class I area and which would have an impact on the ambient air quality of such area equal to or greater than 1 microgram/cubic meter (mg/m³) (24-hour average).

**200.100** **SOLVENT-BORNE COATING MATERIAL** - Any liquid coating-material in which the solvent is primarily or solely a VOC. For the purposes of this definition, "primarily" means that of the total solvent mass that evaporates from the coating, the VOC portion weighs more than the non-VOC portion.

**200.101** **SOURCE** - Any building, structure, facility, or installation that may cause or contribute to air pollution.

**200.102** **SPECIAL INSPECTION WARRANT** - An order, in writing, issued in the name of the State of Arizona, signed by a magistrate, directed to the Control Officer or his deputies authorizing him to enter into or upon public or private property for the purpose of making an inspection authorized by law.

**200.103** **STANDARD CONDITIONS** - A temperature of 293K (68 degrees Fahrenheit or 20 degrees Celsius) and a pressure of 101.3 kilopascals (29.92 in.Hg or 1013.25 mb). When applicable, all analyses and tests shall be calculated and reported at standard gas temperatures and pressure values.

**200.104** **STATE IMPLEMENTATION PLAN (SIP)** - The plan adopted by the State of Arizona which provides for implementation, maintenance, and enforcement of such primary and secondary ambient air quality standards as are adopted by the Administrator under the Act.

**200.105** **STATIONARY SOURCE** - Any source that operates at a fixed location and that emits or generates regulated air pollutants.

**200.106** **SYNTHETIC MINOR** - Any source whose maximum capacity to emit a pollutant under its physical and operational design would exceed the major source threshold levels but is restricted by an enforceable emissions limitation that prevents such source from exceeding major source threshold levels.

**200.107** **TEMPORARY CLEAN COAL TECHNOLOGY DEMONSTRATION PROJECT** - A clean coal technology demonstration project operated for five years or less and that complies with the SIP and other requirements necessary to attain and maintain the national ambient air quality standards during the project and after the project is terminated.

**200.108** **TITLE V** - Title V of the Federal Clean Air Act as amended in 1990 and the 40 CFR Part 70 EPA regulations adopted to implement the Act.

**200.109** **TOTAL REDUCED SULFUR (TRS)** - The sum of the sulfur compounds, primarily hydrogen sulfide, methyl mercaptan, dimethyl sulfide, and dimethyl disulfide, that are released during kraft pulping and other operations and measured by Method 16 in 40 CFR 60, Appendix A.

**200.110** **TRADE SECRETS** - Information to which all of the following apply:

**a.** A person has taken reasonable measures to protect from disclosure and the person intends to continue to take such measures.

**b.** The information is not, and has not been, reasonably obtainable without the person's consent by other persons, other than governmental bodies, by use of legitimate means, other than discovery based on a showing of special need in a judicial or quasi-judicial proceeding.

**c.** No statute, including ARS §49-487, specifically requires disclosure of the information to the public.

**d.** The person has satisfactorily shown that disclosure of the information is likely to cause substantial harm to the business's competitive position.

**200.111** **TRIVIAL ACTIVITY** – For the purpose of this rule, a trivial activity shall be any activity, process, or emissions unit that, in addition to meeting the criteria for insignificant activity, has extremely low emissions. No activity, process, or emissions unit that is conducted as part of a manufacturing process or is related to the source's primary business activity shall be considered trivial. Trivial activities are listed in Appendix E of these rules and may be omitted from Title V permit applications and from Non-Title V permit applications.

**200.112** **UNCLASSIFIED AREA** - An area which the Administrator, because of lack of adequate data, is unable to classify as an attainment or nonattainment area for a specific pollutant. For purposes of these rules, unclassified areas are to be treated as attainment areas.

**200.113** **VOLATILE ORGANIC COMPOUND (VOC)** - Any organic compound which participates in atmospheric photochemical reactions, except the non-precursor organic compounds.

**SECTION 300 - STANDARDS**

**301** **AIR POLLUTION PROHIBITED**: No person shall discharge from any source whatever into the atmosphere regulated air pollutants which exceed in quantity or concentration that specified and allowed in these rules, the Arizona Administrative Code or ARS, or which cause damage to property, or unreasonably interfere with the comfortable enjoyment of life or property of a substantial part of a community, or obscure visibility, or which in any way degrade the quality of the ambient air below the standards established by the Board of Supervisors or the Director.

**302** **APPLICABILITY OF MULTIPLE RULES**: Whenever more than one standard in this rule applies to any source or whenever a standard in this rule and a standard in the Maricopa County Air Pollution Control Regulations Regulation III-Control of Air Contaminants applies to any source, the rule or combination of rules resulting in the lowest rate or lowest concentration of regulated air pollutants released to the atmosphere shall apply, unless otherwise specifically exempted or designated.

**SECTION 400 - ADMINISTRATIVE REQUIREMENTS**

**401** **CERTIFICATION OF TRUTH, ACCURACY, AND COMPLETENESS**: Any application form or report submitted under these rules shall contain certification by a responsible official of truth, accuracy, and completeness of the application form or report as of the time of submittal. This certification and any other certification required under these rules shall state that, based on information and belief formed after reasonable inquiry, the statements and information in the document are true, accurate, and complete.

**402** **CONFIDENTIALITY OF INFORMATION**:

**402.1** The Control Officer shall make all permits, including all elements required to be in the permit under Rule 210-Title V Permit Provisions of these rules and Rule 220-Non-Title V Permit Provisions of these rules, available to the public.

**402.2** Any records, reports, or information obtained from any person under these rules shall be available to the public, unless the Control Officer has notified the person in writing as specified in Section 402.3 of this rule and unless a person:

**a.** Precisely identifies the information in the permit(s), records, or reports, which is considered confidential.

**b.** Provides sufficient supporting information to allow the Control Officer to evaluate whether such information satisfies the requirements related to trade secrets as defined in Section 200.110 of this rule.

**402.3** Within 30 days of receipt of a notice of confidentiality that complies with Section 402.2 of this rule, the Control Officer shall make a determination as to whether the information satisfies the requirements for trade secrets as described in Section 200.110 of this rule and so notify the

applicant in writing. If the Control Officer agrees with the applicant that the information covered by the notice of confidentiality satisfies the statutory requirements, the Control Officer shall include a notice in the administrative record of the permit application that certain information has been considered confidential.

**402.4** A claim of confidentiality shall not excuse a person from providing any and all information required or requested by the Control Officer.

**402.5** A claim of confidentiality shall not be a defense for failure to provide such information.

**SECTION 500 - MONITORING AND RECORDS**

**501** **REPORTING REQUIREMENTS**: The owner and/or operator of any air pollution source shall maintain records of all emissions testing and monitoring, records detailing all malfunctions which may cause any applicable emission limitation to be exceeded, records detailing the implementation of approved control plans and compliance schedules, records required as a condition of any permit, records of materials used or produced, and any other records relating to the emission of air contaminants which may be requested by the Control Officer.

**502** **DATA REPORTING**: When requested by the Control Officer, a person shall furnish to the Department information to locate and classify air contaminant sources according to type, level, duration, frequency, and other characteristics of emissions and such other information as may be necessary. This information shall be sufficient to evaluate the effect on air quality and compliance with these rules. The owner and/or operator of a source requested to submit information under Section 501 of this rule may subsequently be required to submit annually, or at such intervals specified by the Control Officer, reports detailing any changes in the nature of the source since the previous report and the total annual quantities of materials used or air contaminants emitted.

**503** **EMISSION STATEMENTS REQUIRED AS STATED IN THE ACT**: Upon request of the Control Officer and as directed by the Control Officer, the owner and/or operator of any source which emits or may emit oxides of nitrogen ($NO_x$) or volatile organic compounds (VOC) shall provide the Control Officer with an emission statement, in such form as the Control Officer prescribes, showing measured actual emissions or estimated actual emissions of $NO_x$ and VOC from that source. At a minimum, the emission statement shall contain all information required by the Consolidated Emissions Reporting Rule in 40 CFR 51, Subpart A, Appendix A, Table 2A, which is incorporated by reference in Appendix G of these rules. The statement shall contain emissions for the time period specified by the Control Officer. The statement shall also contain a certification by a responsible official of the company that the information contained in the statement is accurate to the best knowledge of the individual certifying the statement. Statements shall be submitted annually to the Department. The Control Officer may waive this requirement for the owner and/or operator of

any source which emits less than 25 tons per year of oxides of nitrogen or volatile organic compounds with an approved emission inventory for sources based on AP-42 or other methodologies approved by the Administrator.

**504** **RETENTION OF RECORDS**: Information and records required by applicable requirements and copies of summarizing reports recorded by the owner and/or operator and submitted to the Control Officer shall be retained by the owner and/or operator for five years after the date on which the information is recorded or the report is submitted. Non-Title V sources may retain such information, records, and reports for less than five years, if otherwise allowed by these rules.

**505** **ANNUAL EMISSIONS INVENTORY REPORT**:

**505.1** Upon request of the Control Officer and as directed by the Control Officer, the owner and/or operator of a business shall complete and shall submit to the Control Officer an annual emissions inventory report. The report is due by April 30, or 90 days after the Control Officer makes the inventory form(s) available, whichever occurs later. These requirements apply whether or not a permit has been issued and whether or not a permit application has been filed.

**505.2** The annual emissions inventory report shall be in the format provided by the Control Officer.

**505.3** The Control Officer may require submittal of supplemental emissions inventory information forms for air contaminants under ARS §49-476.01, ARS §49-480.03, and Rule 372-Maricopa County Hazardous Air Pollutants (HAPs) Program of these rules.

**AQ-2013-006** – a text amendment to the Maricopa County Air Pollution Control Regulations to update the definitions of "volatile organic compound (VOC)" and "non-precursor organic compound" and to make various minor changes of a purely editorial nature in Rules 100, 330, 33l, 333, 334, 335, 336, 338, 339, 340, 341, 342, 343, 344, 345, 346, 347, 348, 349, 352, 353, 358, and Appendix G. The verbatim text amendment adopted by the BOS on September 25, 2013 is shown below in legislative format with added language underscored and deleted language struck-through:

**REGULATION I - GENERAL PROVISIONS**

**RULE 100**

**GENERAL PROVISIONS AND DEFINITIONS**

**INDEX**

**SECTION 100 – GENERAL**


101 DECLARATION OF INTENT

102 LEGAL AUTHORITY

103 VALIDITY

104 CIRCUMVENTION

105 RIGHT OF INSPECTION OF PREMISES

106 RIGHT OF INSPECTION OF RECORDS

107 ADVISORY COUNCIL

108 HEARING BOARD

109 ANTI-DEGRADATION

110 AVAILABILITY OF POLLUTION INFORMATION

111 ANNUAL REASONABLE FURTHER PROGRESS (RFP) REPORT

112 AVAILABILITY OF INFORMATION


**SECTION 200 – DEFINITIONS**


200.1 AAC

200.2 ACT

200.3 ACTUAL EMISSIONS

200.4 ADMINISTRATOR

200.5 ADVISORY COUNCIL

200.6 AFFECTED FACILITY

200.7 AFFECTED SOURCE

200.8 AFFECTED STATE

200.9 AIR CONTAMINANT

200.10 AIR POLLUTION

200.11 AIR POLLUTION CONTROL EQUIPMENT

200.12 ALLOWABLE EMISSIONS

200.13 AMBIENT AIR

200.14 AP-42

200.15 APPLICABLE IMPLEMENTATION PLAN

200.16 APPLICABLE REQUIREMENT

200.17 APPROVED

200.18 AREA SOURCE

200.19 A.R.S.

200.20 ASME

200.21 ASTM

200.22 ATTAINMENT AREA

200.23 BEGIN ACTUAL CONSTRUCTION

200.24 BEST AVAILABLE CONTROL TECHNOLOGY (BACT)

200.25 BRITISH THERMAL UNIT (BTU)

200.26 BUILDING, STRUCTURE, FACILITY, OR INSTALLATION

200.27 CFR

200.28 CIRCUMSTANCES OUTSIDE THE CONTROL OF THE SOURCE

200.29 CLEAN COAL TECHNOLOGY

200.30 CLEAN COAL TECHNOLOGY DEMONSTRATION PROJECT

200.31 COMMENCE

200.32 COMPLETE

200.33 CONSTRUCTION

200.34 CONTROL OFFICER

200.35 DEPARTMENT

200.36 DIRECTOR

200.37 DISCHARGE

200.38 DIVISION

200.39 DUST GENERATING OPERATION

200.40 EFFLUENT

200.41 ELECTRIC UTILITY STEAM GENERATING UNIT

200.42 EMISSION STANDARD

200.43 EMISSIONS UNIT

200.44 EPA

200.45 EQUIVALENT METHOD

200.46 EXCESS EMISSIONS

200.47 EXISTING SOURCE

200.48 FACILITY

200.59 FEDERAL APPLICABLE REQUIREMENT

200.50 FEDERAL LAND MANAGER

200.51 FEDERALLY ENFORCEABLE

200.52 FINAL PERMIT

200.53 FUEL OIL

200.54 FUGITIVE EMISSION

200.55 HAZARDOUS AIR POLLUTANT REASONABLY AVAILABLE CONTROL TECHNOLOGY (HAPRACT)

200.56 INDIAN GOVERNING BODY

200.57 INDIAN RESERVATION

200.58 INSIGNIFICANT ACTIVITY

200.59 MAJOR MODIFICATION

200.60 MAJOR SOURCE

200.61 MAJOR SOURCE THRESHOLD

200.62 MALFUNCTION

200.63 MATERIAL PERMIT CONDITION

200.64 METHOD OF OPERATION

200.65 MODIFICATION

200.66 NET EMISSIONS INCREASE

200.67 NEW SOURCE

200.68 NITROGEN OXIDES (NOX)

200.69 NONATTAINMENT AREA

200.70 NON-PRECURSOR ORGANIC COMPOUND

200.71 OPEN OUTDOOR FIRE

200.72 OPERATION

200.73 ORGANIC COMPOUND

200.74 ORGANIC LIQUID

200.75 OWNER AND/OR OPERATOR

200.76 PARTICULATE MATTER

200.77 PERMITTING AUTHORITY

200.78 PERSON

200.79 PHYSICAL CHANGE

200.80 PM2.5

200.81 PM10

200.82 POLLUTANT

200.83 POLLUTION CONTROL PROJECT

200.84 PORTABLE SOURCE

200.85 POTENTIAL TO EMIT

200.86 PROPOSED PERMIT

200.87 PROPOSED FINAL PERMIT
200.88 QUANTIFIABLE
200.89 REACTIVATION OF A VERY CLEAN COAL-FIRED ELECTRIC UTILITY STEAM GENERATING UNIT
200.90 REASONABLY AVAILABLE CONTROL TECHNOLOGY (RACT)
200.91 REFERENCE METHOD
200.92 REGULATED AIR POLLUTANT
200.93 REGULATORY REQUIREMENTS
200.94 REPLICABLE
200.95 REPOWERING
200.96 REPRESENTATIVE ACTUAL ANNUAL EMISSIONS
200.97 RESPONSIBLE OFFICIAL
200.98 SCHEDULED MAINTENANCE
200.99 SIGNIFICANT
200.100 SOLVENT-BORNE COATING MATERIAL
200.101 SOURCE
200.102 SPECIAL INSPECTION WARRANT
200.103 STANDARD CONDITIONS
200.104 STATE IMPLEMENTATION PLAN (SIP)
200.105 STATIONARY SOURCE
200.106 SYNTHETIC MINOR
200.107 TEMPORARY CLEAN COAL TECHNOLOGY DEMONSTRATION PROJECT
200.108 TITLE V
200.109 TOTAL REDUCED SULFUR (TRS)
200.110 TRADE SECRETS
200.111 TRIVIAL ACTIVITY
200.112 UNCLASSIFIED AREA
200.113 VOLATILE ORGANIC COMPOUND (VOC)

**SECTION 300 – STANDARDS**

301 AIR POLLUTION PROHIBITED
302 APPLICABILITY OF MULTIPLE RULES

**SECTION 400 - ADMINISTRATIVE REQUIREMENTS**

401 CERTIFICATION OF TRUTH, ACCURACY, AND COMPLETENESS
402 CONFIDENTIALITY OF INFORMATION

**SECTION 500 - MONITORING AND RECORDS**

501 REPORTING REQUIREMENTS

502 DATA REPORTING
503 EMISSION STATEMENTS REQUIRED AS STATED IN THE ACT
504 RETENTION OF RECORDS
505 ANNUAL EMISSIONS INVENTORY REPORT

**Revised 07/13/88**
**Revised 10/01/90**
**Revised 06/22/92**
**Revised 11/16/92**
**Repealed and Adopted 11/15/93**
**Revised 02/15/95**
**Revised 04/03/96**
**Revised 06/19/96**
**Revised 03/04/98**
**Revised 05/20/98**
**Revised 07/26/00**
**Revised 03/07/01**
**Revised 08/22/01**
**Revised 11/06/02**
**Revised 03/15/06**
**Revised 06/06/07**
**Revised 09/25/13**

**MARICOPA COUNTY**
**AIR POLLUTION CONTROL REGULATIONS**
**REGULATION I - GENERAL PROVISIONS**
**RULE 100**
**GENERAL PROVISIONS AND DEFINITIONS**

## SECTION 100 – GENERAL

**101** **DECLARATION OF INTENT:** The Maricopa County Air Pollution Control Regulations prevent, reduce, control, correct, or remove regulated air pollutants originating within the territorial limits of Maricopa County and carry out the mandates of Arizona Revised Statutes (A.R.S.), Title 49-The Environment.

**102** **LEGAL AUTHORITY:** These rules are adopted under the authority granted by A.R.S. §49-479.

**103** **VALIDITY:** If any section, subsection, clause, phrase, or provision of these rules is held to be invalid for any reason, such decision shall not affect the validity of the remaining portion.

**104** **CIRCUMVENTION:** A person shall not build, erect, install, or use any article, machine, equipment, condition, or any contrivance, the use of which, without resulting in a reduction in the total release of regulated air pollutants to the atmosphere, conceals or dilutes an emission which would otherwise constitute a violation of these rules. No person shall circumvent these rules to dilute regulated air pollutants by using more emission openings than is considered normal practice by the industry or activity in question.

**105** **RIGHT OF INSPECTION OF PREMISES:** The Control Officer, during reasonable hours, for the purpose of enforcing and administering these rules or any provision of A.R.S. relating to the emission or control prescribed pursuant thereto, may enter every building, premises, or other place, except the interior of structures used as private residences. In the event that consent to enter for inspection purposes has been refused or circumstances justify the failure to seek such consent, special inspection warrants may be issued by a magistrate. Every person is guilty of a petty offense under A.R.S. §49-488 who in any way denies, obstructs, or hampers such entrance or inspection that is lawfully authorized by warrant.

**106** **RIGHT OF INSPECTION OF RECORDS:** When the Control Officer has reasonable cause to believe that any person has violated or is in violation of any provision of this rule, any rule adopted under this rule, or any requirement of a permit issued under this rule, the Control Officer may request, in writing, that such person produce all existing books, records, and other documents evidencing tests, inspections, or studies which may reasonably relate to compliance or noncompliance with rules adopted under this rule. No person shall fail nor refuse to produce all existing documents required in such written request by the Control Officer.

**107** **ADVISORY COUNCIL:** An Advisory Council appointed by the Board of Supervisors may advise and consult with the Board of Supervisors, the Maricopa County Air Quality Department, and the Control Officer in effecting the mandates of A.R.S. Title 49.

**108** **HEARING BOARD:** The Board of Supervisors shall appoint a 5-member hearing board knowledgeable in the field of air pollution. At least three members shall not have a substantial interest, as defined in A.R.S. §38-502(11), in any person required to obtain an air pollution permit. Each member shall serve a term of three years.

**109** **ANTI-DEGRADATION:** The standards in these rules shall not be construed as permitting the preventable degradation of air quality in any area of Maricopa County.

**110** **AVAILABILITY OF POLLUTION INFORMATION:** The public shall be informed on a daily basis of average daily concentration of three pollutants: particulates, carbon monoxide, and ozone. This information shall be disseminated through the use of newspapers, radio, and television. The

levels of each pollutant shall be expressed through the use of the Air Quality Index (AQI) and a written copy of such information shall be made available at the office of the Maricopa County Air Quality Department, 1001 ~~North~~ N. Central ~~Avenue~~ Ave., ~~Suite 400~~, Phoenix, Arizona, 85004~~, 602-506-6010~~.

**111** **ANNUAL REASONABLE FURTHER PROGRESS (RFP) REPORT:** A report on the progress in implementation of nonattainment area plans shall be produced by the Department each year. The primary function of the report is to review the implementation schedules for control measures and emission reduction forecasts in the nonattainment area plans. The annual report will be made available to the public at the offices of the Maricopa County Air Quality Department, 1001 ~~North~~ N. Central ~~Avenue~~ Ave., ~~Suite 400~~, Phoenix, Arizona, 85004, ~~602-506-6010~~.

**112** **AVAILABILITY OF INFORMATION:** Copies ~~of 40 CFR 51, Subpart A, Appendix A, Table 2A are available at 1001 North Central Avenue, Suite 695, Phoenix, Arizona, 85004, or call 602-506-6010 for information.~~of these incorporated materials are available electronically at: ecfr.gpoaccess.gov; at the Maricopa County Air Quality Department, 1001 N. Central Ave., Phoenix, AZ, 85004. ASTM standards are available from ASTM International, 100 Barr Harbor Drive, P.O. Box C700, West Conshohocken, PA 19428, or from its website at www.astm.org.

**SECTION 200 - DEFINITIONS:** To aid in the understanding of these rules, the following general definitions are provided. Additional definitions, as necessary, can be found in each rule of the Maricopa County Air Pollution Control Regulations.

**200.1** **AAC -** Arizona Administrative Code.

**200.2** **ACT -** The Clean Air Act of 1963 (P.L. 88-206; 42 United States Code sections 7401 through 7671), as amended by the Clean Air Act Amendments of 1990 (P.L.101-549).

**200.3** **ACTUAL EMISSIONS -** The actual rate of emissions of a pollutant from an emissions unit, as determined in Section 200.3(a) through Section 200.3(e) of this rule:

**a.** In general, actual emissions as of a particular date shall equal the average rate, in tons per year, at which the emissions unit actually emitted the pollutant during a 2-year period that precedes the particular date and that is representative of normal source operation. The Control Officer may allow the use of a different time period upon a demonstration that it is more representative of normal source operation. Actual emissions shall be calculated using the emissions unit's actual operating hours, production rates, and types of materials processed, stored, or combusted during the selected time period.

**b.** If there is inadequate information to determine actual historical emissions, then the Control Officer may presume that source-specific allowable emissions for the emissions unit are equivalent to the actual emissions of the emissions unit.

**c.** For any emissions unit at a Title V source, other than an electric utility steam generating unit described in Section 200.3(e) of this rule that has not begun normal operations on the particular date, actual emissions shall equal the unit's potential to emit on that date.

**d.** For any emissions unit at a Non-Title V source that has not begun normal operations on the particular date, actual emissions shall be based on applicable control equipment requirements and projected conditions of operation.

**e.** For an electric utility steam generating unit (other than a new unit or the replacement of an existing unit), actual emissions of the unit, following the physical or operational change, shall equal the representative actual annual emissions of the unit, if the source owner and/or operator maintains and submits to the Control Officer on an annual basis, for a period of five years from the date the unit resumes regular operation, information demonstrating that the physical or operational change did not result in an emissions increase. A longer period, not to exceed 10 years may be required by the Control Officer, if the Control Officer determines the longer period to be more representative of normal source post-change operations.

**200.4** **ADMINISTRATOR** - The Administrator of the United States Environmental Protection Agency.

**200.5** **ADVISORY COUNCIL** - The Maricopa County Air Pollution Control Advisory Council appointed by the Maricopa County Board of Supervisors.

**200.6** **AFFECTED FACILITY** - With reference to a stationary source, any apparatus to which a standard is applicable.

**200.7** **AFFECTED SOURCE** - A source that includes one or more emissions units which are subject to emission reduction requirements or limitations under Title IV-Acid Deposition Control of the Act.

**200.8** **AFFECTED STATE** - Any State whose air quality may be affected and that is contiguous to Arizona or that is within 50 miles of the permitted source.

**200.9** **AIR CONTAMINANT** - Includes smoke, vapors, charred paper, dust, soot, grime, carbon, fumes, gases, sulfuric acid mist aerosols, aerosol droplets, odors, particulate matter, windborne matter, radioactive materials, noxious chemicals, or any other material in the outdoor atmosphere.

**200.10** **AIR POLLUTION** - The presence in the outdoor atmosphere of one or more air contaminants, or combinations thereof, in sufficient quantities, which either alone or in connection with other substances, by reason of their concentration and duration, are or tend to be injurious to human, plant, or animal life, or causes damage to property, or unreasonably interferes with the

comfortable enjoyment of life or property of a substantial part of a community, or obscures visibility, or which in any way degrades the quality of the ambient air below the standards established by the Board of Supervisors.

**200.11 AIR POLLUTION CONTROL EQUIPMENT** - Equipment used to eliminate, reduce, or control the emission of air pollutants into the ambient air.

**200.12 ALLOWABLE EMISSIONS** - The emission rate of a stationary source calculated using the maximum rated capacity of the source (unless the source is subject to federally enforceable limits which restrict the operating rate or hours of operation or both) and the most stringent of the following:

**a.** The applicable New Source Performance Standards as described in Rule 360 of these rules or the Federal Hazardous Air Pollutant Program as described in Rule 370 of these rules; or

**b.** The applicable existing source performance standard as approved for the State Implementation Plan (SIP); or

**c.** The emissions rate specified in any federally promulgated rule or federally enforceable permit condition.

**200.13 AMBIENT AIR** - That portion of the atmosphere, external to buildings, to which the general public has access.

**200.14 AP-42** - The EPA document "Compilation of Air Pollutant Emission Factors," as incorporated by reference in Appendix G of these rules.

**200.15 APPLICABLE IMPLEMENTATION PLAN** - Those provisions of the State Implementation Plan (SIP) approved by the Administrator or a Federal Implementation Plan (FIP) promulgated under Title I-Air Pollution Prevention And Control of the Act.

**200.16 APPLICABLE REQUIREMENT** - Applicable requirement means any of the following:

**a.** Any federal applicable requirement as defined in Section 200.49 of this rule.

**b.** Any other requirement established under the Maricopa County Air Pollution Control Regulations or A.R.S. Title 49, Chapter 3, Articles 1, 3, 7, and 8.

**200.17 APPROVED** - Approved in writing by the Maricopa County Air Pollution Control Officer.

**200.18 AREA SOURCE** - Any stationary source that is not a major source. For purposes of these rules, the term "area source" shall not include motor vehicles or nonroad vehicles subject to regulation under Title II-Emission Standards For Moving Sources of the Act.

**200.19** **A.R.S.** - The Arizona Revised Statutes. The titles of the most frequently used A.R.S. references in these rules are listed below:

| | |
|---|---|
| A.R.S. §38-502(11) | Public Officers And Employees, Conduct Of Office, Conflict Of Interest Of Officers And Employees, Definitions, Substantial Interest |
| A.R.S. Title 49 | The Environment |
| A.R.S. Title 49, Chapter 3 | The Environment, Air Quality |
| A.R.S. Title 49, Chapter 4 | The Environment, Solid Waste Management |
| A.R.S. §49-109 | The Environment, General Provisions, Department Of Environmental Quality, Certificate Of Disclosure Of Violations; Definition; Remedies |
| A.R.S. §49-401 | The Environment, Air Quality, General Provisions, Declaration Of Policy |
| A.R.S. §49-426 | The Environment, Air Quality, State Air Pollution Control, Permits; Duties Of Director; Exceptions; Applications; Objections; Fees |
| A.R.S. §49-426.04 | The Environment, Air Quality, State Air Pollution Control, State List Of Hazardous Air Pollutants |
| A.R.S. §49-426.05 | The Environment, Air Quality, State Air Pollution Control, Designation Of Sources Of Hazardous Air Pollutants |
| A.R.S. §49-429 | The Environment, Air Quality, State Air Pollution Control, Permit Transfers; Notice; Appeal |
| A.R.S. §49-464 | The Environment, Air Quality, State Air Pollution Control, Violation; Classification; Penalties; Definition |
| A.R.S. §49-473 | The Environment, Air Quality, County Air Pollution Control, Board Of Supervisors |
| A.R.S. §49-476.01 | The Environment, Air Quality, County Air Pollution Control, Monitoring |
| A.R.S. §49-478 | The Environment, Air Quality, County Air Pollution Control, Hearing Board |
| A.R.S. §49-480 | The Environment, Air Quality, County Air Pollution Control, Permits; Fees |
| A.R.S. §49-480.03 | The Environment, Air Quality, County Air Pollution Control, Federal Hazardous Air Pollutant Program; Date Specified By Administrator; Prohibition |
| A.R.S. §49-480.04 | The Environment, Air Quality, County Air Pollution Control, County Program For Control Of Hazardous Air Pollutants |

| | |
|---|---|
| A.R.S. §49-482 | The Environment, Air Quality, County Air Pollution Control, Appeals To Hearing Board |
| A.R.S. §49-483 | The Environment, Air Quality, County Air Pollution Control, Permit Transfers; Notice; Appeal |
| A.R.S. §49-487 | The Environment, Air Quality, County Air Pollution Control, Classification And Reporting; Confidentiality Of Records |
| A.R.S. §49-488 | The Environment, Air Quality, County Air Pollution Control, Special Inspection Warrant |
| A.R.S. §49-490 | The Environment, Air Quality, County Air Pollution Control, Hearings On Orders Of Abatement |
| A.R.S. §49-498 | The Environment, Air Quality, County Air Pollution Control, Notice Of Hearing; Publication; Service |
| A.R.S. §49-501 | The Environment, Air Quality, County Air Pollution Control, Unlawful Open Burning; Definition; Exceptions; Fine |
| A.R.S. §49-511 | The Environment, Air Quality, County Air Pollution Control, Violations, Order Of Abatement |
| A.R.S. §49-514 | The Environment, Air Quality, County Air Pollution Control, Violation; Classification; Definition |

**200.20 ASME** - The American Society of Mechanical Engineers.

**200.21 ASTM** - The American Society for Testing and Materials.

**200.22 ATTAINMENT AREA** - An area so designated by the Administrator, acting under Section 107-Air Quality Control Regions of the Act, as having ambient air pollutant concentrations equal to or less than national primary or secondary ambient air quality standards for a particular pollutant or pollutants.

**200.23 BEGIN ACTUAL CONSTRUCTION** - In general, initiation of physical on-site construction activities on an emissions unit, which are of a permanent nature. Such activities include installation of building supports and foundations, laying of underground pipe work, and construction of permanent storage structures. With respect to a change in method of operation, "begin actual construction" refers to those on-site activities, other than preparatory activities, which mark the initiation of the change.

**200.24 BEST AVAILABLE CONTROL TECHNOLOGY (BACT)** - An emissions limitation, based on the maximum degree of reduction for each pollutant, subject to regulation under the Act, which would be emitted from any proposed stationary source or modification, which the Control Officer, on a case-by-case basis, taking into account energy, environmental, and economic impacts and

other costs, determines is achievable for such source or modification through application of production processes or available methods, systems, and techniques, including fuel cleaning or treatment or innovative fuel combination techniques for control of such pollutant. Under no circumstances shall BACT be determined to be less stringent than the emission control required by an applicable provision of these rules or of any State or Federal laws ("Federal laws" include the EPA approved State Implementation Plan (SIP)). If the Control Officer determines that technological or economic limitations on the application of measurement methodology to a particular emissions unit would make the imposition of an emissions standard infeasible, a design, equipment, work practice, operational standard, or combination thereof may be prescribed instead to satisfy the requirement for the application of BACT. Such standard shall, to the degree possible, set forth the emissions reduction achievable by implementation of such design, equipment, work practice or operation, and shall provide for compliance by means which achieve equivalent results.

**200.25 BRITISH THERMAL UNIT (BTU)** - The quantity of heat required to raise the temperature of one pound of water one degree Fahrenheit (°F) at 39.1°F.

**200.26 BUILDING, STRUCTURE, FACILITY, OR INSTALLATION** - All the pollutant emitting equipment and activities that belong to the same industrial grouping, that are located on one or more contiguous or adjacent properties, and that are under the control of the same person or persons under common control, except the activities of any vessel. Pollutant-emitting activities shall be considered as part of the same industrial grouping if they belong to the same "Major Group" as described in the "Standard Industrial Classification Manual, 1987".

**200.27 CFR** - The United States Code of Federal Regulations.

**200.28 CIRCUMSTANCES OUTSIDE THE CONTROL OF THE SOURCE** - Shall include, but not be limited to, circumstances where a violation resulted from a sudden and unavoidable breakdown of the process or the control equipment, resulted from unavoidable conditions during a startup or shutdown, or resulted from upset of operations.

**200.29 CLEAN COAL TECHNOLOGY** - Any technology, including technologies applied at the pre-combustion, combustion, or post-combustion stage, at a new or existing facility that will achieve significant reductions in air emissions of sulfur dioxide or oxides of nitrogen associated with the utilization of coal in the generation of electricity or process steam that was not in widespread use as of November 15, 1990.

**200.30 CLEAN COAL TECHNOLOGY DEMONSTRATION PROJECT** - A project using funds appropriated under the heading "Department Of Energy-Clean Coal Technology", up to a total amount of $2,500,000,000 for commercial demonstration of clean coal technology or similar

projects, funded through appropriations for the Environmental Protection Agency. The Federal contribution for a qualifying project shall be at least 20% of the total cost of the demonstration project.

**200.31 COMMENCE** - As applied to construction of a major source or a major modification, that the owner and/or operator has all necessary preconstruction approvals or permits and has either:

**a.** Begun, or caused to begin, a continuous program of actual on-site construction of the source, to be completed within a reasonable time; or

**b.** Entered into binding agreements or contractual obligations, which cannot be canceled or modified without substantial loss to the owner and/or operator, to undertake a program of actual construction of the source to be completed within a reasonable time.

**200.32 COMPLETE** - In reference to an application for a permit, "complete" means that the application contains all the information necessary for processing the application. Designating an application complete for purposes of permit processing does not preclude the Control Officer from requesting nor from accepting any additional information.

**200.33 CONSTRUCTION** - Any physical change or change in the method of operation, including fabrication, erection, or installation, demolition, or modification of an emissions unit, which would result in a change in actual emissions.

**200.34 CONTROL OFFICER** - The executive head of the department authorized or designated to enforce air pollution regulations, the executive head of an air pollution control district established under A.R.S. §49-473, or the designated agent.

**200.35 DEPARTMENT** - The Maricopa County Air Quality Department.

**200.36 DIRECTOR** - The director of the Arizona Department Of Environmental Quality (ADEQ).

**200.37 DISCHARGE** - The release or escape of an effluent into the atmosphere from a source.

**200.38 DIVISION** - The Division no longer exists; consequently, all references in these rules to Division refer to Department.

**200.39 DUST GENERATING OPERATION** - Any activity capable of generating fugitive dust, including but not limited to, land clearing, earthmoving, weed abatement by discing or blading, excavating, construction, demolition, bulk material handling, storage and/or transporting operations, vehicle use and movement, the operation of any outdoor equipment, or unpaved parking lots. For the purpose of this rule, landscape maintenance and playing on or maintaining a

field used for nonmotorized sports shall not be considered a dust generating operation. However, landscape maintenance shall not include grading, trenching, or any other mechanized surface disturbing activities performed to establish initial landscapes or to redesign existing landscapes.

**200.40 EFFLUENT -** Any air contaminant which is emitted and subsequently escapes into the atmosphere.

**200.41 ELECTRIC UTILITY STEAM GENERATING UNIT -** Any steam electric generating unit that is constructed for the purpose of supplying more than 1/3 of its potential electric output capacity and more than 25 MW electric output to any utility power distribution system for sale. Any steam supplied to a steam distribution system, for the purpose of providing steam to a steam-electric generator that would produce electrical energy for sale, is also considered in determining the electrical energy output capacity of the affected facility.

**200.42 EMISSION STANDARD -** The definition of emission standard, as summarized from A.R.S. §49-514(T) and A.R.S. §49-464(V), is: A numeric limitation on the volume or concentration of air pollutants in emissions from a source or a specific design, equipment, or work practice standard, the purpose of which is to eliminate or reduce the volume or concentration of pollutants emitted by a source. The term emission standard does not include opacity standards. Violations of emission standards shall be determined in the manner prescribed by the applicable regulations issued by the Administrator or the Director or the Control Officer.

**200.43 EMISSIONS UNIT -** Any part of a stationary source which emits or would have the potential to emit any regulated air pollutant.

**200.44 EPA -** The United States Environmental Protection Agency.

**200.45 EQUIVALENT METHOD -** Any method of sampling and analyzing for an air pollutant, which has been demonstrated to the Administrator's satisfaction to have a consistent and quantitatively known relationship to the reference method, under specified conditions.

**200.46 EXCESS EMISSIONS -** Emissions of an air pollutant in excess of an emission standard, as measured by the compliance test method applicable to such emission standard.

**200.47 EXISTING SOURCE -**

**a.** A source in operation prior to the effective date of this rule, or a source on which the construction or modification has commenced and for which the Control Officer has granted a permit prior to the effective date of this rule; or

**b.** When used in conjunction with a source subject to new source performance standards (NSPS), any source which does not have an applicable NSPS under Rule 360-New Source Performance Standards of these rules.

**200.48 FACILITY** - The definition of facility is included in Section 200.6-Definition Of Affected Facility of this rule and in Section 200.26-Definition Of Building, Structure, Facility Or Installation of this rule.

**200.49 FEDERAL APPLICABLE REQUIREMENT** - Any of the following as they apply to emissions units covered by a Title V permit or a Non-Title V permit (including requirements that have been promulgated or approved by the EPA through rulemaking at the time of issuance but have future effective compliance dates):

**a.** Any standard or other requirement provided for in the applicable implementation plan approved or promulgated by the EPA through rulemaking under Title I-Air Pollution Prevention And Control of the Act that implements the relevant requirements of the Act, including any revisions to that plan promulgated in 40 CFR 52.

**b.** Any term or condition of any unitary permits issued under regulations approved or promulgated through rulemaking under Title I-Air Pollution Prevention And Control, including Parts C or D, of the Act.

**c.** Any standard or other requirement under Section 111-Standards Of Performance For New Stationary Sources of the Act, includes Section 111(d).

**d.** Any standard or other requirement under Section 112-National Emission Standards For Hazardous Air Pollutants of the Act, including any requirement concerning accident prevention under Section 112(r)(7) of the Act.

**e.** Any standard or other requirement of the acid rain program under Title IV Acid Deposition Control of the Act or the regulations promulgated thereunder and incorporated under Rule 371-Acid Rain of these rules.

**f.** Any requirements established under Section 504(b)-Permit Requirements And Conditions or Section 114(a)(3)-Inspections, Monitoring, And Entry of the Act.

**g.** Any standard or other requirement governing solid waste incineration under Section 129-Solid Waste Combustion of the Act.

**h.** Any standard or other requirement for consumer and commercial products pursuant to Section 183(e)-Federal Ozone Measures of the Act.

**i.** Any standard or other requirement for tank vessels pursuant to Section 183(f)-Federal Ozone Measures of the Act.

**j.** Any standard or other requirement of the program to control air pollution from outer continental shelf sources under Section 328-Air Pollution From Outer Continental Shelf Activities of the Act.

**k.** Any standard or other requirement of the regulations promulgated to protect stratospheric ozone under Title VI-Stratospheric Ozone Protection of the Act, unless the Administrator has determined that such requirements need not be contained in a Title V permit; and

**l.** Any national ambient air quality standard or increment or visibility requirement under Part C-Prevention Of Significant Deterioration Of Air Quality of Title I-Air Pollution Prevention And Control of the Act, but only as it would apply to temporary sources permitted under Section 504(e)-Permit Requirements And Conditions of the Act.

**200.50 FEDERAL LAND MANAGER** - With respect to any lands in the United States, the Secretary Of The Department with authority over such lands.

**200.51 FEDERALLY ENFORCEABLE** -

**a.** All terms and conditions contained in a Title V permit, except those terms and conditions which have been specifically designated as not federally enforceable;

**b.** The requirements of operating permit programs and permits issued under such permit programs which have been approved by the Administrator, including the requirements of State and County operating permit programs approved under Title V-Permits of the Act or under any new source review permit program;

**c.** All limitations and conditions which are enforceable by the Administrator, including the requirements of the New Source Performance Standards (NSPS) and the National Emissions Standards for Hazardous Air Pollutants (NESHAPs) contained in these rules;

**d.** The requirements of such other State or County rules or regulations approved by the Administrator for inclusion in the State Implementation Plan (SIP);

**e.** The requirements of any federal regulation promulgated by the Administrator as part of the State Implementation Plan (SIP); and

**f.** The requirements of State and County operating permit programs, other than Title V programs, which have been approved by the Administrator and incorporated into the applicable State Implementation Plan (SIP) under the criteria for federally enforceable State Operating Permit Programs set forth in 54, Federal Register 27274, dated June 28, 1989. Such requirements include permit terms and conditions which have been entered into voluntarily by a source under this rule and/or under Rule 220-Non-Title V Permit Provisions of these rules.

**200.52 FINAL PERMIT** - The version of a permit issued by the Control Officer after completion of all review required by Maricopa County Air Pollution Control Regulations.

**200.53 FUEL OIL** - Number 2 through Number 6 fuel oils as specified in ASTM D-396-90a-Specification For Fuel Oils, gas turbine fuel oils Numbers 2-GT through 4-GT as specified in ASTM D-2880-90a-Specification For Gas Turbine Fuel Oils, or diesel fuel oils Numbers 2-D and 4-D as specified in ASTM D-975-90a-Specification For Diesel Fuel Oils.

**200.54 FUGITIVE EMISSION** - Any emission which could not reasonably pass through a stack, chimney, vent, or other functionally equivalent opening.

**200.55 HAZARDOUS AIR POLLUTANT REASONABLY AVAILABLE CONTROL TECHNOLOGY (HAPRACT) -** An emissions standard for hazardous air pollutants which the Control Officer, acting pursuant to §49-480.04(C), determines is reasonably available for a source. In making the foregoing determination, the Control Officer shall take into consideration the estimated actual air quality impact of the standard, the cost of complying with the standard, the demonstrated reliability and widespread use of the technology required to meet the standard, and any non-air quality health and environmental impacts and energy requirements. For purposes of this definition, an emissions standard may be expressed as a numeric emissions limitation or as a design, equipment, work practice, or operational standard.

**200.56 INDIAN GOVERNING BODY** - The governing body of any tribe, band, or group of Indians subject to the jurisdiction of the United States and recognized by the United States as possessing power of self-government.

**200.57 INDIAN RESERVATION** - Any federally recognized reservation established by Treaty, Agreement, Executive Order, or Act Of Congress.

**200.58 INSIGNIFICANT ACTIVITY** – For the purpose of this rule, an insignificant activity shall be any activity, process, or emissions unit that is not subject to a source-specific applicable requirement, that emits no more than 0.5 ton per year of hazardous air pollutants (HAPs) and no more than two tons per year of a regulated air pollutant, and that is either included in Appendix D-List of Insignificant Activities of these rules or is approved as an insignificant activity under Rule

200-Permit Requirements of these rules. Source-specific applicable requirements include requirements for which emissions unit-specific information is needed to determine applicability.

**200.59 MAJOR MODIFICATION** - Any physical change or change in the method of operation of a major source that would result in a significant net emissions increase of any regulated air pollutant.

**a.** Any net emissions increase that is significant for VOCs shall be considered significant for ozone.

**b.** Any net emissions increase that is significant for oxides of nitrogen shall be considered significant for ozone nonattainment areas classified as marginal, moderate, serious, or severe.

**c.** For the purposes of this definition, the following shall not be considered a physical change or a change in the method of operation:

**(1)** Routine maintenance, repair, and replacement;

**(2)** Use of an alternative fuel or raw material by reason of an order under Sections 2(a) and (b) of the Energy Supply and Environmental Coordination Act of 1974, 15 U.S.C. §792, or by reason of a natural gas curtailment plan under the Federal Power Act, 16 U.S.C. §792 - 825r;

**(3)** Use of an alternative fuel by reason of an order or rule under Section 125-Measures To Prevent Economic Disruption Or Unemployment of the Act;

**(4)** Use of an alternative fuel at a steam generating unit to the extent that the fuel is generated from municipal solid waste;

**(5)** Use of an alternative fuel or raw material by a stationary source that either:

**(a)** The source was capable of accommodating before December 12, 1976, unless the change would be prohibited under any federally enforceable permit condition established after December 12, 1976, under 40 CFR 52.21, or under Rule 200-Permit Requirements, Rule 210-Title V Permit Provisions, Rule 240-Permits For New Major Sources And Major Modifications To Existing Major Sources, Rule 245-Continuous Source Emission Monitoring, and Rule 270-Performance Tests of these rules; or

**(b)** The source is approved to use under any permit issued under 40 CFR 52.21, or under Rule 200-Permit Requirements, Rule 210-Title V Permit Provisions, Rule 240-

Permits For New Major Sources And Major Modifications To Existing Major Sources, Rule 245-Continuous Source Emission Monitoring, and Rule 270-Performance Tests of these rules;

**(6)** An increase in the hours of operation or in the production rate, unless the change would be prohibited under any federally enforceable permit condition established after December 12, 1976, under 40 CFR 52.21, or under Rule 200-Permit Requirements, Rule 210-Title V Permit Provisions, Rule 240-Permits For New Major Sources And Major Modifications To Existing Major Sources, Rule 245-Continuous Source Emission Monitoring, and Rule 270-Performance Tests of these rules;

**(7)** Any change in ownership at a stationary source;

**(8)** The addition, replacement, or use of a pollution control project at an existing electric utility steam generating unit, unless the Control Officer determines that the addition, replacement, or use renders the unit less environmentally beneficial, or except:

**(a)** When the Control Officer has reason to believe that the pollution control project would result in a significant net increase in representative actual annual emissions of any criteria pollutant over levels used for that source in the most recent Title I air quality impact analysis in the area, if any, and

**(b)** The Control Officer determines that the increase will cause or contribute to a violation of any national ambient air quality standard, prevention of significant deterioration (PSD) increment, or visibility limitation;

**(9)** The installation, operation, cessation, or removal of a temporary clean coal technology demonstration project, if the project complies with:

**(a)** The State Implementation Plan (SIP); and

**(b)** Other requirements necessary to attain and maintain the national ambient air quality standards during the project and after it is terminated;

**(10)** For electric utility steam generating units located in attainment and unclassified areas only, the installation or operation of a permanent clean coal technology demonstration project that constitutes repowering, if the project does not result in an increase in the potential to emit of any regulated pollutant emitted by the unit. This exemption shall apply on a pollutant-by-pollutant basis; and

**(11)** For electric utility steam generating units located in attainment and unclassified areas only, the reactivation of a very clean coal-fired electric utility steam generating unit.

**200.60 MAJOR SOURCE -**

**a.** A major source as defined in Rule 240-Permits For New Major Sources And Major Modifications To Existing Major Sources of these rules;

**b.** A major source under Section 112-National Emission Standards For Hazardous Air Pollutants of the Act:

**(1)** For pollutants other than radionuclides, any stationary source that emits or has the potential to emit, in the aggregate, including fugitive emissions, 10 tons per year (tpy) or more of any hazardous air pollutant which has been listed under Section 112(b) of the Act, 25 tpy or more of any combination of such hazardous air pollutants, or such lesser quantity as described in Title 18-Environmental Quality, Chapter 2-Department Of Environmental Quality Air Pollution Control, Article 11-Federal Hazardous Air Pollutants of the Arizona Administrative Code. Notwithstanding the preceding sentence, emissions from any oil or gas exploration or production well (with its associated equipment) and emissions from any pipeline compressor or pump station shall not be aggregated with emissions from other similar units, whether or not such units are in a contiguous area or under common control, to determine whether such units or stations are major sources; or

**(2)** For radionuclides, major source shall have the meaning specified by the Administrator by rule.

**c.** A major stationary source, as defined in Section 302-Definitions of the Act, that directly emits or has the potential to emit 100 tpy or more of any air pollutant, including any major source of fugitive emissions of any such pollutant. The fugitive emissions of a stationary source shall not be considered in determining whether it is a major stationary source for the purpose of Section 302(j) of the Act, unless the source belongs to one of the following categories of stationary source:
Coal cleaning plants (with thermal dryers).
Kraft pulp mills.
Portland cement plants.
Primary zinc smelters.
Iron and steel mills.
Primary aluminum ore reduction plants.

Primary copper smelters.

Municipal incinerators capable of charging more than 50 tons of refuse per day.

Hydrofluoric, sulfuric, or nitric acid plants.

Petroleum refineries.

Lime plants.

Phosphate rock processing plants.

Coke oven batteries.

Sulfur recovery plants.

Carbon black plants (furnace process).

Primary lead smelters.

Fuel conversion plants.

Sintering plants.

Secondary metal production plants.

Chemical process plants.

Fossil-fuel boilers (or combination thereof) totaling more than 250 million BTU per hour heat input.

Petroleum storage and transfer units with a total storage capacity exceeding 300,000 barrels.

Taconite ore processing plants.

Glass fiber processing plants.

Charcoal production plants.

Fossil fuel-fired steam electric plants of more than 250 million BTU per hour rated heat input.

Any other stationary source category which, as of August 7, 1980, is being regulated under Section 111-Standards Of Performance For New Stationary Sources of the Act or under Section 112-National Emission Standards For Hazardous Air Pollutants of the Act.

**200.61 MAJOR SOURCE THRESHOLD –** The lowest applicable emissions rate for a pollutant that would cause the source to be a major source, at the particular time and location, under Section 200.60-Definition Of Major Source of this rule.

**200.62 MALFUNCTION** - Any sudden and unavoidable failure of air pollution control equipment, process, or process equipment to operate in a normal and usual manner. Failures that are caused by poor maintenance, careless operation, or any other upset condition or equipment breakdown which could have been prevented by the exercise of reasonable care shall not be considered malfunctions.

**200.63 MATERIAL PERMIT CONDITION -**

**a.** For the purposes of A.R.S. §49-464(G) and A.R.S. §49-514(G), a material permit condition shall mean a condition which satisfies all of the following:

**(1)** The condition is in a permit or permit revision issued by the Control Officer or by the Director after the effective date of this rule.

**(2)** The condition is identified within the permit as a material permit condition.

**(3)** The condition is one of the following:

**(a)** An enforceable emission standard imposed to avoid classification as a major modification or major source or to avoid triggering any other applicable requirement.

**(b)** A requirement to install, operate, or maintain a maximum achievable control technology or hazardous air pollutant reasonably available control technology required under Rule 372-Maricopa County Hazardous Air Pollutants (HAPs) Program of these rules.

**(c)** A requirement for the installation or certification of a monitoring device.

**(d)** A requirement for the installation of air pollution control equipment.

**(e)** A requirement for the operation of air pollution control equipment.

**(f)** An opacity standard required by Section 111-Standards Of Performance For New Stationary Sources of the Act or Title I-Air Pollution Prevention And Control, Part C or D, of the Act.

**(4)** Violation of the condition is not covered by Subsections (A) through (F) or (H) through (J) of A.R.S. §49-464 or Subsections (A) through (F) or (H) through (J) of A.R.S. §49-514.

**b.** For the purposes of Sections 200.63(a)(3)(c), (d), and (e) of this rule, a permit condition shall not be material where the failure to comply resulted from circumstances which were outside the control of the source.

**200.64 METHOD OF OPERATION** - The definition of method of operation is included in Section 200.72-Definition Of Operation of this rule.

**200.65 MODIFICATION** - A physical change in or a change in the method of operation of a source which increases the actual emissions of any regulated air pollutant emitted by such source by more than any relevant de minimis amount, or which results in the emission of any regulated air pollutant not previously emitted by more than such de minimis amount.

**200.66 NET EMISSIONS INCREASE -**

**a.** The amount by which the sum of Section 200.66(a)(1) and Section 200.66(a)(2) below exceed zero:

**(1)** Any increase in actual emissions from a particular physical change or change in the method of operation at a stationary source; and

**(2)** Any other increases and decreases in actual emissions at the source that are contemporaneous with the particular change and are otherwise creditable.

**b.** An increase or decrease in actual emissions is contemporaneous with the increase from the particular change only if it occurs between:

**(1)** The date five years before construction on the particular change commences; and

**(2)** The date that the increase from the particular change occurs.

**c.** An increase or decrease in actual emissions is creditable only if the Control Officer has not relied on it in issuing a permit, which is in effect when the increase in actual emissions from the particular change occurs. In addition, in nonattainment areas, a decrease in actual emissions shall be considered in determining net emissions increase due to modifications only if the State has not relied on it in demonstrating attainment or reasonable further progress.

**d.** An increase or decrease in actual emissions of sulfur dioxide, nitrogen oxides, or particulate matter which occurs before the applicable baseline date, as described in Rule 500-Attainment Area Classification of these rules, is creditable only if it is required to be considered in calculating the amount of maximum allowable increases remaining available.

**e.** An increase in actual emissions is creditable only to the extent that the new level of actual emissions exceeds the old level.

**f.** A decrease in actual emissions is creditable only to the extent that:

**(1)** The old level of actual emissions or the old level of allowable emissions, whichever is lower, exceeds the new level of actual emissions;

**(2)** The emissions unit was actually operated and emitted the specific pollutant;

**(3)** It is federally enforceable at and after the time that actual construction on the particular change begins; and

**(4)** It has approximately the same qualitative significance for public health and welfare as that attributed to the increase from the particular change.

**g.** An increase that results from a physical change at a source occurs when the emissions unit on which construction occurred becomes operational and begins to emit a particular pollutant. Any replacement unit that requires shakedown becomes operational only after a reasonable shakedown period, not to exceed 180 days.

**200.67 NEW SOURCE -** Any source that is not an existing source.

**200.68 NITROGEN OXIDES (NOX) -** All oxides of nitrogen except nitrous oxide, as measured by test methods set forth in the Appendices to 40 CFR 60.

**200.69 NONATTAINMENT AREA** - An area so designated by the Administrator, acting under Section 107-Air Quality Control Regions of the Act, as exceeding national primary or secondary ambient air standards for a particular pollutant or pollutants.

**200.70 NON-PRECURSOR ORGANIC COMPOUND** - Any of the organic compounds that have been designated by the EPA as having negligible photochemical reactivity as listed in Appendix G of these rules.

~~**a.** Any of the following organic compounds that have been designated by the EPA as having negligible photo-chemical reactivity:~~

~~67-64-1 Acetone;~~

~~74-82-8 Methane;~~

~~74-84-0 Ethane;~~

~~75-09-2 Methylene chloride (dichloromethane);~~

~~71-55-6 1,1,1trichloroethane (methyl chloroform);~~

~~75-69-4 Trichlorofluoromethane (CFC-11);~~

~~75-71-8 Dichlorodifluoromethane (CFC-12);~~

~~75-45-6 Chlorodifluoromethane (HCFC-22);~~

~~76-13 1-1,1,2-trichloro-1,2,2-trifluoroethane (CFC-113);~~

~~6-14-2 1,2-dichloro-1,1,2,2-tetrafluoroethane (CFC-114);~~

~~6-15-3 Chloropentafluoroethane (CFC-115);~~

~~5-46-7 Trifluoromethane (HFC-23);~~

~~06-83-2 1,1,1-trifluoro-2,2-dichloroethane (HCFC-123);~~

~~837-89-0 2-chloro-1,1,1,2-tetrafluoroethane (HCFC-124);~~

~~717-00-6 1,1-dichloro-1-fluoroethane (HCFC-141b);~~

~~5-68-3 1-chloro-1,1-difluoroethane (HCFC-142b);~~

~~34-33-6 Pentafluoroethane (HFC-125);~~

~~354-25-6 1,1,2,2-tetrafluoroethane (HFC-134);~~

~~811-97-2 1,1,1,2-tetrafluoroethane (HFC-134a);~~

~~420-46-2 1,1,1-trifluoroethane (HFC-143a);~~

~~75-37-6 1,1-difluoroethane (HFC-152a);~~

~~98-56-6 Parachlorobenzotrifluoride (PCBTF);~~

~~127-18-4 Perchloroethylene (tetrachloroethylene);~~

~~422-56-0 3,3-dichloro-1,1,1,2,2-pentafluoropropane (HCFC-225ca);~~

~~507-55-1 1,3-dichloro-1,1,2,2,3-pentafluoropropane (HCFC-225cb);~~

~~1,1,1,2,3,4,4,5,5,5-decafluoropentane (HFC-43-10mee);~~

~~75-10-5 Difluoromethane (HFC-32);~~

~~353-36-6 Ethylfluoride (HFC-161);~~

~~690-39-1 1,1,1,3,3,3-hexafluoropropane (HFC-236fa);~~

~~678-86-7 1,1,2,2,3-pentafluoropropane (HFC-245ca);~~

~~460-73-1 1,1,2,3,3-pentafluoropropane (HFC-245ea);~~

~~431-31-2 1,1,1,2,3-pentafluoropropane (HFC-245eb);~~

~~1,1,1,3,3-pentafluoropropane (HFC-245fa);~~

~~431-63-0 1,1,1,2,3,3-hexafluoropropane (HFC-236ea);~~

~~1,1,1,3,3-pentafluorobutane (HFC-365mfc);~~

~~593-70-4 Chlorofluoromethane (HCFC-31);~~

~~1615-75-4 1-chloro-1-fluoroethane (HCFC-151a);~~

~~354-23-4 1,2-dichloro-1,1,2-trifluoroethane (HCFC-123a);~~

~~163702-07-6 1,1,1,2,2,3,3,4,4-nonafluoro-4-methoxy-butane (C4F9OCH3) (HFE-7100);~~

~~2-(difluoromethoxymethyl)-1,1,1,2,3,3,3-heptafluoropropane~~

~~((CF3)2CFCF2OCH3);~~

~~163702-05-41 -ethoxy-1,1,2,2,3,3,4,4,4-nonafluorobutane (C4F9OC2H5) (HFE-7200);~~

~~2-(ethoxydifluoromethyl)-1,1,1,2,3,3,3-heptafluoropropane~~

~~((CF3)2CFCF2OC2H5);~~

~~79-20-9 methyl acetate;~~

~~cyclic, branched, or linear completely methylated siloxanes;~~

~~375-03-1 1,1,1,2,2,3,3-heptafluoro-3-methoxy-propan (n-C3F7OCH3,HFE-7000);~~

~~431-89-0 1,1,1,2,3,3,3-heptafluoropropane (HFC-227ea);~~

~~107-31-3 methyl formate (HCOOCH3);~~

~~And perfluorocarbon compounds that fall into these classes:~~

~~Cyclic, branched, or linear, completely fluorinated alkanes;~~

~~Cyclic, branched, or linear, completely fluorinated ethers with no unsaturations;~~

~~Cyclic, branched, or linear, completely fluorinated tertiary amines with no~~

~~unsaturations; and Sulfur containing perfluorocarbons with no unsaturations and with sulfur bonds only to carbon and fluorine.~~

~~**b.** The following compound(s) are VOC for purposes of all recordkeeping, emissions reporting, photochemical dispersion modeling, and inventory requirements, which apply to VOC and shall be uniquely identified in emission reports but are not VOC for purposes of VOC emissions limitations or VOC content requirements: t-butyl acetate (540-88-5).~~

**200.71 OPEN OUTDOOR FIRE** - Any combustion of material of any type outdoors, where the products of combustion are not directed through a flue.

**200.72 OPERATION** - Any physical action resulting in a change in the location, form, or physical properties of a material, or any chemical action resulting in a change in the chemical composition or properties of a material.

**200.73 ORGANIC COMPOUND** - Any compound of carbon, excluding carbon monoxide, carbon dioxide, carbonic acid, metallic carbides or carbonates, and ammonium carbonate.

**200.74 ORGANIC LIQUID** - Any organic compound which exists as a liquid under any actual conditions of use, transport, or storage.

**200.75 OWNER AND/OR OPERATOR** - Any person who owns, leases, operates, controls, or supervises an affected facility or a stationary source of which an affected facility is a part.

**200.76 PARTICULATE MATTER** - Any material, except condensed water containing no more than analytical trace amounts of other chemical elements or compounds, which has a nominal aerodynamic diameter smaller than 100 microns (micrometers) and which exists in a finely divided form as a liquid or solid at actual conditions.

**200.77 PERMITTING AUTHORITY** - The department or a County department or agency that is charged with enforcing a permit program adopted under A.R.S. §49-480, Subsection A.

**200.78 PERSON** - Any individual, public or private corporation, company, partnership, firm, association or society of persons, the Federal Government and any of its departments or agencies, or the State and any of its agencies, departments or political subdivisions.

**200.79 PHYSICAL CHANGE** - Any replacement, addition, or alteration of equipment that is not already allowed under the terms of the source's permit.

**200.80 PM2.5** - Particulate matter with an aerodynamic diameter less than or equal to a nominal 2.5 microns (micrometers), as measured by the applicable State and Federal Reference Test Methods.

**200.81 PM10** - Particulate matter with an aerodynamic diameter less than or equal to a nominal 10 microns (micrometers), as measured by the applicable State and Federal Reference Test Methods.

**200.82 POLLUTANT** – An air contaminant the emissions or ambient concentration of which is regulated under these rules.

**200.83 POLLUTION CONTROL PROJECT** - Any activity or project undertaken at an existing electric utility steam generating unit to reduce emissions from the unit. The activities or projects are limited to:

**a.** The installation of conventional or innovative pollution control technology, including but not limited to advanced flue gas desulfurization, sorbent injection for sulfur dioxide and nitrogen oxides controls, and electrostatic precipitators;

**b.** An activity or project to accommodate switching to a fuel less polluting than the fuel used before the activity or project, including but not limited to natural gas or coal reburning, or the co-firing of natural gas and other fuels for the purpose of controlling emissions;

**c.** A permanent clean coal technology demonstration project, conducted under Title II, Section 101(d) of the Further Continuing Appropriation Act of 1985 (42 U.S.C. 5903(d)) or subsequent appropriations up to a total amount of $2,500,000,000 for commercial demonstration of clean coal technology, or similar projects funded through appropriations for the EPA; or

**d.** A permanent clean coal technology demonstration project that constitutes a repowering project.

**200.84 PORTABLE SOURCE** – Any stationary source that is capable of being transported and operated in more than one county of this state.

**200.85 POTENTIAL TO EMIT** - The maximum capacity of a stationary source to emit pollutants, excluding secondary emissions, under its physical and operational design. Any physical or operational limitation on the capacity of the source to emit a pollutant, including air pollution control equipment and restrictions on hours of operation or on the type or amount of material combusted, stored, or processed, shall be treated as part of its design, if the limitation or the effect it would have on emissions is federally enforceable.

**200.86 PROPOSED PERMIT** - The version of a permit for which the Control Officer offers public participation under Rule 210-Title V Permit Provisions of these rules or offers affected State review under Rule 210-Title V Permit Provisions of these rules.

**200.87 PROPOSED FINAL PERMIT** - The version of a Title V permit that the Control Officer proposes to issue and forwards to the Administrator for review, in compliance with Rule 210-Title V Permit Provisions of these rules.

**200.88 QUANTIFIABLE** - With respect to emissions, including the emissions involved in equivalent emission limits and emission trades, capable of being measured or otherwise determined in terms of quantity and assessed in terms of character. Quantification may be based on emission factors, stack tests, monitored values, operating rates and averaging times, materials used in a process or production, modeling, or other reasonable measurement practices.

**200.89 REACTIVATION OF A VERY CLEAN COAL-FIRED ELECTRIC UTILITY STEAM GENERATING UNIT** - Any physical change or change in the method of operation, associated with commencing commercial operations by a coal-fired utility unit after a period of discontinued operation, if the unit:

**a.** Has not been in operation for the 2-year period before enactment of the Clean Air Act Amendments of 1990 and the emissions from the unit continue to be carried in the Maricopa County emissions inventory at the time of enactment;

**b.** Was equipped before shutdown with a continuous system of emissions control that achieves a removal efficiency for sulfur dioxide of no less than 85% and a removal efficiency for particulates of no less than 98%;

**c.** Is equipped with low nitrogen oxides (NOx) burners before commencement of operations following reactivation; and

**d.** Is otherwise in compliance with the Act.

**200.90 REASONABLY AVAILABLE CONTROL TECHNOLOGY (RACT) -** For facilities subject to Regulation III-Control Of Air Contaminants of these rules, the emissions limitation of the existing source performance standard. For facilities not subject to Regulation III-Control Of Air Contaminants of these rules, the lowest emission limitation that a particular source is capable of achieving by the application of control technology that is reasonably available considering technological and economic feasibility. Such technology may previously have been applied to a similar, but not necessarily identical, source category. RACT for a particular facility, other than a facility subject to Regulation III-Control Of Air Contaminants of these rules, is determined on a case-by-case basis, considering the technological feasibility and cost-effectiveness of the application of the control technology to the source category.

**200.91 REFERENCE METHOD** - Any of the methods of sampling and analyzing for an air pollutant as described in the Arizona Testing Manual for Air Pollutant Emissions; 40 CFR 50, Appendices A through L; 40 CFR 52, Appendices D and E; 40 CFR 60, Appendices A through F; and 40 CFR 61, Appendices B and C.

**200.92 REGULATED AIR POLLUTANT** - Any of the following:

**a.** Any conventional air pollutant as defined in A.R.S. §49-401.01, which means any pollutant for which the Administrator has promulgated a primary or a secondary national ambient air quality standard (NAAQS) (i.e., for carbon monoxide (CO), nitrogen oxides (NOX), lead, sulfur oxides (SOX) measured as sulfur dioxides (SO2), ozone, and particulates).

**b.** Nitrogen oxides (NOX) and volatile organic compounds (VOCs).

**c.** Any air contaminant that is subject to a standard contained in Rule 360-New Source Performance Standards of these rules or promulgated under Section 111-Standards Of Performance For New Stationary Sources of the Act.

**d.** Any hazardous air pollutant (HAP) as defined in Rule 372-Maricopa County Hazardous Air Pollutants (HAPs) Program of these rules.

**e.** Any Class I or II substance listed in Section 602-Stratospheric Ozone Protection; Listing Of Class I And Class II Substances of the Act.

**200.93 REGULATORY REQUIREMENTS** - All applicable requirements, Department rules, and all State requirements pertaining to the regulation of air contaminants.

**200.94 REPLICABLE** - With respect to methods or procedures sufficiently unambiguous such that the same or equivalent results would be obtained by the application of the method or procedure by different users.

**200.95 REPOWERING** - The Control Officer shall give expedited consideration to permit applications for any source that satisfies the following criteria and that is granted an extension under Section 409-Repowered Sources of the Act:

**a.** Repowering means replacing an existing coal-fired boiler with one of the following clean coal technologies:

**(1)** Atmospheric or pressurized fluidized bed combustion;

**(2)** Integrated gasification combined cycle;

**(3)** Magnetohydrodynamics;

**(4)** Direct and indirect coal-fired turbines;

**(5)** Integrated gasification fuel cells; or

**(6)** As determined by the Administrator, in consultation with the United States Secretary of Energy, a derivative of one or more of the above listed technologies; and

**(7)** Any other technology capable of controlling multiple combustion emissions simultaneously with improved boiler or generation efficiency and with significantly greater waste reduction relative to the performance of technology in widespread commercial use as of November 15, 1990.

**b.** Repowering also includes any oil, gas, or oil and gas-fired units which have been awarded clean coal technology demonstration funding as of January 1, 1991 by the United States Department of Energy.

**200.96 REPRESENTATIVE ACTUAL ANNUAL EMISSIONS -** The average rate, in tons per year, at which the source is projected to emit a pollutant for the 2-year period after a physical change or change in the method of operation of a unit (or a different consecutive 2-years within 10 years after that change, if the Control Officer determines that the different period is more representative of source operations), considering the effect the change will have on increasing or decreasing the hourly emission rate and on projected capacity utilization. In projecting future emissions, the Control Officer shall:

**a.** Consider all relevant information, including but not limited to historical operational data, the company's representations, filings with the Maricopa County, State or Federal regulatory authorities, and compliance plans under Title IV-Acid Deposition Control of the Act; and

**b.** Exclude, in calculating any increase in emissions that result from the particular physical change or change in the method of operation at an electric utility steam generating unit, that portion of the unit's emissions, following the change, that could have been accommodated during the representative baseline period and that is attributable to an increase in projected capacity utilization at the unit unrelated to the particular change, including any increased utilization due to the rate of electricity demand growth for the utility system as a whole.

**200.97 RESPONSIBLE OFFICIAL -** One of the following:

**a.** For a corporation: A president, secretary, treasurer, or vice-president of the corporation in charge of a principal business function, or any other person who performs similar policy or decision-making functions for the corporation, or a duly authorized representative of such person if the representative is responsible for the overall operation of one or more manufacturing, production, or operating facilities applying for or subject to a permit and either;

**(1)** The sources employ more than 250 persons or have gross annual sales or expenditures exceeding $25 million (in second quarter 1980 dollars); or

**(2)** The delegation of authority to such representatives is approved in advance by the permitting authority;

**b.** For a partnership or sole proprietorship: A general partner or the proprietor, respectively;

**c.** For a municipality, State, Federal, or other public agency: Either a principal executive officer or ranking elected official. For the purposes of this rule, a principal executive officer of a Federal agency includes the chief executive officer having responsibility for the overall operations of a principal geographic unit of the agency (e.g., a Regional Administrator); or

**d.** For affected sources:

**(1)** The designated representative insofar as actions, standards, requirements, or prohibitions under Title IV-Acid Deposition Control of the Act or the regulations promulgated thereunder are concerned; and

**(2)** The designated representative for any other purposes under 40 CFR, Part 70.

**200.98 SCHEDULED MAINTENANCE -** Preventive maintenance undertaken in order to avoid a potential breakdown or upset of air pollution control equipment.

**200.99 SIGNIFICANT -**

**a.** In reference to a net emissions increase or the potential of a source to emit any of the following pollutants, a rate of emissions that would equal or exceed any one of the following rates:

| Pollutant | Emissions Rate (TPY) |
|---|---|
| Carbon Monoxide | 100 |
| Nitrogen Oxides | 40 |

| | |
|---|---|
| Sulfur Dioxide | 40 |
| Particulate Matter | 25 |
| $PM_{10}$ | 15 |
| VOC | 40 |
| Lead | 0.6 |
| Fluorides | 3 |
| Sulfuric Acid Mist | 7 |
| Hydrogen Sulfide ($H_2S$) | 10 |
| Total Reduced Sulfur (including hydrogen sulfide) | 10 |
| Reduced Sulfur Compounds (including hydrogen sulfide) | 10 |
| Municipal waste combustor organics (measured as total tetra-through-octa-chlorinated: dibenzo-p-dioxins and dibenzofurans) | $3.5 \times 10^{-6}$ |
| Municipal waste combustor metals (measured as particulate matter) | 15 |
| Municipal waste combustor acid gases (measured as sulfur dioxide and hydrogen chloride) | 40 |
| Municipal solid waste landfill emissions( measured as nonmethane organic compounds) | 50 |

**b.** In ozone nonattainment areas classified as serious or severe, significant emissions of VOC shall be determined under Rule 240-Permit Requirements For New Major Sources And Major Modifications To Existing Major Sources of these rules.

**c.** In reference to a regulated air pollutant that is not listed in Section 200.99(a) of this rule, is not a Class I nor a Class II substance listed in Section 602-Listing Of Class I And Class II Substances of the Act and is not a hazardous air pollutant according to Rule 372-Maricopa County Hazardous Air Pollutants (HAPs) Program of these rules, any emissions rate.

**d.** Notwithstanding the emission amount listed in Section 200.99(a) of this rule, any emissions rate or any net emissions increase associated with a major source or major modification, which would be constructed within 10 kilometers (6.2 miles) of a Class I area and which would have an impact on the ambient air quality of such area equal to or greater than 1 microgram/cubic meter ($mg/m^3$) (24-hour average).

**200.100** **SOLVENT-BORNE COATING MATERIAL** - Any liquid coating-material in which the solvent is primarily or solely a VOC. For the purposes of this definition, "primarily" means that of the total solvent mass that evaporates from the coating, the VOC portion weighs more than the non-VOC portion.

**200.101** **SOURCE** - Any building, structure, facility, or installation that may cause or contribute to air pollution.

**200.102** **SPECIAL INSPECTION WARRANT** - An order, in writing, issued in the name of the State of Arizona, signed by a magistrate, directed to the Control Officer or his deputies authorizing him to enter into or upon public or private property for the purpose of making an inspection authorized by law.

**200.103** **STANDARD CONDITIONS** - A temperature of 293K (68 degrees Fahrenheit or 20 degrees Celsius) and a pressure of 101.3 kilopascals (29.92 in. Hg or 1013.25 mb). When applicable, all analyses and tests shall be calculated and reported at standard gas temperatures and pressure values.

**200.104** **STATE IMPLEMENTATION PLAN (SIP) -** The plan adopted by the State Of Arizona which provides for implementation, maintenance, and enforcement of such primary and secondary ambient air quality standards as are adopted by the Administrator under the Act.

**200.105** **STATIONARY SOURCE** - Any source that operates at a fixed location and that emits or generates regulated air pollutants.

**200.106** **SYNTHETIC MINOR** - Any source whose maximum capacity to emit a pollutant under its physical and operational design would exceed the major source threshold levels but is restricted by an enforceable emissions limitation that prevents such source from exceeding major source threshold levels.

**200.107** **TEMPORARY CLEAN COAL TECHNOLOGY DEMONSTRATION PROJECT** - A clean coal technology demonstration project operated for five years or less and that complies with the SIP and other requirements necessary to attain and maintain the national ambient air quality standards during the project and after the project is terminated.

**200.108** **TITLE V** - Title V of the Federal Clean Air Act as amended in 1990 and the 40 CFR Part 70 EPA regulations adopted to implement the Act.

**200.109 TOTAL REDUCED SULFUR (TRS) -** The sum of the sulfur compounds, primarily hydrogen sulfide, methyl mercaptan, dimethyl sulfide, and dimethyl disulfide, that are released during kraft pulping and other operations and measured by Method 16 in 40 CFR 60, Appendix A.

**200.110 TRADE SECRETS** - Information to which all of the following apply:

**a.** A person has taken reasonable measures to protect from disclosure and the person intends to continue to take such measures.

**b.** The information is not, and has not been, reasonably obtainable without the person's consent by other persons, other than governmental bodies, by use of legitimate means, other than discovery based on a showing of special need in a judicial or quasi-judicial proceeding.

**c.** No statute, including A.R.S. §49-487, specifically requires disclosure of the information to the public.

**d.** The person has satisfactorily shown that disclosure of the information is likely to cause substantial harm to the business's competitive position.

**200.111 TRIVIAL ACTIVITY** – For the purpose of this rule, a trivial activity shall be any activity, process, or emissions unit that, in addition to meeting the criteria for insignificant activity, has extremely low emissions. No activity, process, or emissions unit that is conducted as part of a manufacturing process or is related to the source's primary business activity shall be considered trivial. Trivial activities are listed in Appendix E of these rules and may be omitted from Title V permit applications and from Non-Title V permit applications.

**200.112 UNCLASSIFIED AREA** - An area which the Administrator, because of lack of adequate data, is unable to classify as an attainment or nonattainment area for a specific pollutant. For purposes of these rules, unclassified areas are to be treated as attainment areas.

**200.113 VOLATILE ORGANIC COMPOUND (VOC) -** Any organic compound which participates in atmospheric photochemical reactions, except the non-precursor organic compounds.

## SECTION 300 – STANDARDS

**301 AIR POLLUTION PROHIBITED**: No person shall discharge from any source whatever into the atmosphere regulated air pollutants which exceed in quantity or concentration that specified and allowed in these rules, the Arizona Administrative Code or A.R.S., or which cause damage to property, or unreasonably interfere with the comfortable enjoyment of life or property of a

substantial part of a community, or obscure visibility, or which in any way degrade the quality of the ambient air below the standards established by the Board Of Supervisors or the Director.

**302** **APPLICABILITY OF MULTIPLE RULES**: Whenever more than one standard in this rule applies to any source or whenever a standard in this rule and a standard in the Maricopa County Air Pollution Control Regulations Regulation III-Control Of Air Contaminants applies to any source, the rule or combination of rules resulting in the lowest rate or lowest concentration of regulated air pollutants released to the atmosphere shall apply, unless otherwise specifically exempted or designated.

## SECTION 400 - ADMINISTRATIVE REQUIREMENTS

**401** **CERTIFICATION OF TRUTH, ACCURACY, AND COMPLETENESS**: Any application form or report submitted under these rules shall contain certification by a responsible official of truth, accuracy, and completeness of the application form or report as of the time of submittal. This certification and any other certification required under these rules shall state that, based on information and belief formed after reasonable inquiry, the statements and information in the document are true, accurate, and complete.

**402** **CONFIDENTIALITY OF INFORMATION**:

**402.1** The Control Officer shall make all permits, including all elements required to be in the permit under Rule 210-Title V Permit Provisions of these rules and Rule 220-Non-Title V Permit Provisions of these rules, available to the public.

**402.2** Any records, reports, or information obtained from any person under these rules shall be available to the public, unless the Control Officer has notified the person in writing as specified in Section 402.3 of this rule and unless a person:

**a.** Precisely identifies the information in the permit(s), records, or reports, which is considered confidential.

**b.** Provides sufficient supporting information to allow the Control Officer to evaluate whether such information satisfies the requirements related to trade secrets as defined in Section 200.110 of this rule.

**402.3** Within 30 days of receipt of a notice of confidentiality that complies with Section 402.2 of this rule, the Control Officer shall make a determination as to whether the information satisfies the requirements for trade secrets as described in Section 200.110 of this rule and so notify the applicant in writing. If the Control Officer agrees with the applicant that

the information covered by the notice of confidentiality satisfies the statutory requirements, the Control Officer shall include a notice in the administrative record of the permit application that certain information has been considered confidential.

**402.4** A claim of confidentiality shall not excuse a person from providing any and all information required or requested by the Control Officer.

**402.5** A claim of confidentiality shall not be a defense for failure to provide such information.

**SECTION 500 - MONITORING AND RECORDS**

**501** **REPORTING REQUIREMENTS**: The owner and/or operator of any air pollution source shall maintain records of all emissions testing and monitoring, records detailing all malfunctions which may cause any applicable emission limitation to be exceeded, records detailing the implementation of approved control plans and compliance schedules, records required as a condition of any permit, records of materials used or produced, and any other records relating to the emission of air contaminants which may be requested by the Control Officer.

**502** **DATA REPORTING**: When requested by the Control Officer, a person shall furnish to the Department information to locate and classify air contaminant sources according to type, level, duration, frequency, and other characteristics of emissions and such other information as may be necessary. This information shall be sufficient to evaluate the effect on air quality and compliance with these rules. The owner and/or operator of a source requested to submit information under Section 501 of this rule may subsequently be required to submit annually, or at such intervals specified by the Control Officer, reports detailing any changes in the nature of the source since the previous report and the total annual quantities of materials used or air contaminants emitted.

**503** **EMISSION STATEMENTS REQUIRED AS STATED IN THE ACT**: Upon request of the Control Officer and as directed by the Control Officer, the owner and/or operator of any source which emits or may emit oxides of nitrogen (NOx) or volatile organic compounds (VOC) shall provide the Control Officer with an emission statement, in such form as the Control Officer prescribes, showing measured actual emissions or estimated actual emissions of NOx and VOC from that source. At a minimum, the emission statement shall contain all information required by the Consolidated Emissions Reporting Rule in 40 CFR 51, Subpart A, Appendix A, Table 2A, which is incorporated by reference in Appendix G of these rules. The statement shall contain emissions for the time period specified by the Control Officer. The statement shall also contain a certification by a responsible official of the company that the information contained in the statement is accurate to the best knowledge of the individual certifying the statement. Statements shall be submitted annually to the Department. The Control Officer may waive this requirement

for the owner and/or operator of any source which emits less than 25 tons per year of oxides of nitrogen or volatile organic compounds with an approved emission inventory for sources based on AP-42 or other methodologies approved by the Administrator.

**504** **RETENTION OF RECORDS**: Information and records required by applicable requirements and copies of summarizing reports recorded by the owner and/or operator and submitted to the Control Officer shall be retained by the owner and/or operator for five years after the date on which the information is recorded or the report is submitted. Non-Title V sources may retain such information, records, and reports for less than five years, if otherwise allowed by these rules.

**505** **ANNUAL EMISSIONS INVENTORY REPORT**:

**505.1** Upon request of the Control Officer and as directed by the Control Officer, the owner and/or operator of a business shall complete and shall submit to the Control Officer an annual emissions inventory report. The report is due by April 30, or 90 days after the Control Officer makes the inventory form(s) available, whichever occurs later. These requirements apply whether or not a permit has been issued and whether or not a permit application has been filed.

**505.2** The annual emissions inventory report shall be in the format provided by the Control Officer.

**505.3** The Control Officer may require submittal of supplemental emissions inventory information forms for air contaminants under A.R.S. §49-476.01, A.R.S. §49-480.03, and Rule 372-Maricopa County Hazardous Air Pollutants (HAPs) Program of these rules.

## REGULATION III - CONTROL OF AIR CONTAMINANTS

## RULE 330
## VOLATILE ORGANIC COMPOUNDS

### INDEX

**SECTION 100 – GENERAL**

101 PURPOSE

**SECTION 200 – DEFINITIONS**

201 DAY

202 NON-COMPLYING SOLVENT

~~203 NON-PRECURSOR ORGANIC COMPOUND~~

~~204~~ 203 ORGANIC COMPOUND

~~205~~ 204 ORGANIC SOLVENT

~~206 VOLATILE ORGANIC COMPOUND (VOC)~~

**SECTION 300 – STANDARDS**

301 LIMITATIONS - OPERATIONS INVOLVING HEAT

302 LIMITATIONS - NON-COMPLYING SOLVENTS

303 LIMITATIONS - PROCESS LINES

304 REDUCTIONS REQUIRED

305 EQUIPMENT CLEANUP

306 VOC CONTAINMENT AND DISPOSAL

307 EXEMPTIONS

**SECTION 400 - ADMINISTRATIVE REQUIREMENTS**

401 COMPLIANCE SCHEDULE

**SECTION 500 - MONITORING AND RECORDS**

501 PROVIDING AND MAINTAINING MONITORING DEVICES

502 DETERMINATION OF COMPLIANCE

503 RECORDKEEPING AND REPORTING

504 TEST METHODS

**Revised 07/13/88**

**Revised 09/21/92**

**Revised 06/19/96**

**Revised 09/25/13**

**MARICOPA COUNTY**

**AIR POLLUTION CONTROL REGULATIONS**

**REGULATION III - CONTROL OF AIR CONTAMINANTS**

**RULE 330**

**VOLATILE ORGANIC COMPOUNDS**

**SECTION 100 – GENERAL**

**101 PURPOSE:** To limit emissions of volatile organic compounds into the atmosphere that may result from the use of organic solvents or processes that emit volatile organic compounds.

**SECTION 200 - DEFINITIONS:** For the purpose of this rule, the following definitions shall apply~~:~~, in addition to those definitions found in Rule 100 (General Provisions and Definitions) of these rules. In the event of any inconsistency between any of the Maricopa County air pollution control rules, the definitions in this rule take precedence.

**201** **DAY -** A period of 24 consecutive hours beginning at midnight.

**202** **NON-COMPLYING SOLVENT -** A solvent which exceeds the applicable percentage composition limit for any of the four chemical groupings listed below.

**202.1** Group I: One or more of the following families of compounds having the olefinic or cyclo-olefinic type of unsaturation − hydrocarbons, alcohols, aldehydes, esters, ethers, and/or ketones; except perchloroethylene: 5 percent by volume.

**202.2** Group II: One or more aromatic compounds having eight or more carbon atoms to the molecule except ethylbenzene, methyl benzoate, and phenyl acetate: 8 percent by volume.

**202.3** Group III: One or more of the following compounds and compound types −ketones having a branched hydrocarbon structure, ethylbenzene, trichloroethylene, and/or toluene: 20 percent by volume.

**202.4** An aggregate of any combination of the above three groups: 20 percent by volume.

**202.5** Whenever any organic solvent or any constituent of an organic solvent may be classified from its chemical structure into more than one of the above groups of organic compounds, it shall be considered a member of the most reactive chemical group that it can be classified into, that is, that group having the lowest percentage composition limit.

~~**203** **NON-PRECURSOR ORGANIC COMPOUND** - Any of the following organic~~

~~compounds which have been designated by the EPA as having negligible photochemical reactivity: methane; ethane; methylene chloride (dichloromethane); 1,1,1-trichloroethane; trichlorofluoromethane (CFC-11); dichlorodifluoromethane (CFC-12); chlorodifluoromethane (CFC-22); 1,1,2-trichlorotrifluoroethane (CFC-113); 1,2-dichlorotetrafluoroethane (CFC-114); chloropentafluoroethane (CFC-115); trifluoromethane (FC-23); 2,2-dichloro-1,1,1-trifluoroethane (HCFC-123); 2-chloro-1,1,1,2-tetrafluoroethane (HCFC-124); 1,1-dichloro-1-fluoroethane (HCFC-141b); 1-chloro-1,1-difluoroethane (HCFC-142b); pentafluoroethane (HFC-125); 1,1,2,2-tetrafluoroethane (HFC-134); 1,1,1,2-tetrafluoroethane (HFC-134a); 1,1,1-trifluoroethane (HFC-~~

~~143a); 1,1-difluoroethane (HFC-152a); all completely fluorinated, completely saturated: alkanes, ethers and tertiary amines.~~

~~204~~203 **ORGANIC COMPOUND -** Any compound of carbon excluding carbon monoxide, carbon dioxide, carbonic acid, carbonates, and metallic carbides.

~~205~~204 **ORGANIC SOLVENT -** Any organic compound which is liquid at actual conditions of use or storage and which is used as a diluent, thinner, dissolver, viscosity reducer, extractant, cleaning agent or is a reactant or product in a manufacturing process.

~~206~~ ~~**VOLATILE ORGANIC COMPOUND (VOC)** - Any organic compound except non-precursor organic compounds.~~

**SECTION 300 – STANDARDS**

**301** **LIMITATIONS - OPERATIONS INVOLVING HEAT:** No person shall discharge more than 15 pounds (6.8 kg) of volatile organic compounds into the atmosphere in any one day from any machine, equipment, device, or other article in which any volatile organic compound or any material containing a volatile organic compound comes into contact with flame or is evaporated at temperatures exceeding 200°F (93.3°C), in the presence of oxygen, unless the entire amount of such discharge has been reduced in accordance with Section 304 of this rule.

**302** **LIMITATIONS - NON-COMPLYING SOLVENTS:** Excluding emissions subject to Section 301 above, no person shall discharge more than 40 pounds (18 kg) of volatile organic compounds into the atmosphere in any one day from any machine, equipment, device or other article for employing, applying, evaporating or drying any non-complying solvent (as defined in Section 202 of this rule) or material containing such non-complying solvent, unless the entire amount of such discharge has been reduced in accordance with Section 304 of this rule.

**303** **LIMITATIONS - PROCESS LINES:** Emissions of VOCs from any series of machines, equipment, devices or other articles which are designed for processing any item including but not limited to continuous web(s), strip(s), or wire(s) and which use operations described in Sections 301 and/or 302 of this rule shall be collectively subject to the limitations of and compliance with those sections.

**304** **REDUCTIONS REQUIRED:** Emission to the atmosphere of volatile organic compounds requiring control pursuant to Section 301 or 302 of this rule shall be reduced by at least one of the following methods:

**304.1** Incineration, provided that 90 percent or more of the carbon in the volatile organic compounds entering the incineration device is oxidized to carbon dioxide and overall control efficiency (capture plus processing) is at least 85 percent by weight; or

**304.2** Adsorption, provided that overall control efficiency (capture plus processing) is at least 85 percent by weight; or

**304.3** Using low VOC material containing no more than 20 percent VOC by volume (as determined by the applicable test method(s) and excluding non-precursor organic compounds and water), provided that no VOC from the material comes into contact with flame; or

**304.4** Processing in a manner not less effective than in subsection 304.1 or 304.2 of this rule and verified by test methods of this rule.

**304.5** The owner or operator using an emissions control device to reduce emissions in accordance with this section shall provide the Control Officer with an Operation and Maintenance (O&M) Plan. This plan shall specify key system operating parameters, such as temperatures, pressures and/or flow rates, necessary to determine compliance with this rule and describe in detail procedures to maintain the approved emission control system. The Control Officer's written approval of this plan shall be required for compliance with this rule to be achieved.

**305** **EQUIPMENT CLEANUP:** A person shall not use any liquid materials containing more than 10 percent volatile organic compounds for the cleanup of equipment unless:

**305.1** The used cleaning liquids are collected in a container which is closed when not in use and is disposed of in a manner such that volatile organic compounds are not emitted into the atmosphere, or

**305.2** The equipment is disassembled and cleaned in a solvent vat which is closed when not in use, or cleaning is done by other methods, approved in writing by the Control Officer, which limit evaporation.

**306** **VOC CONTAINMENT AND DISPOSAL:** No person shall store, discard, or dispose of VOC or VOC-containing material in a way intended to cause or to allow the evaporation of VOC to the atmosphere. Reasonable measures shall be taken to prevent such evaporation which include but are not limited to the following:

**306.1** All materials from which VOC can evaporate, including fresh solvent, waste solvent and solvent-soaked rags and residues, shall be stored in closed containers when not in use; and

**306.2** Such containers one gallon and larger shall be legibly labeled with their contents; and

**306.3** Records of the disposal/recovery of such materials shall be kept. Records of hazardous waste disposal shall be kept in accordance with hazardous waste disposal statutes.

**307** **EXEMPTIONS:** The provisions of this rule shall not apply to:

**307.1** Organic solvent manufacturing facilities and the overland transport of organic solvents and materials containing VOC.

**307.2** The use of equipment, materials, and/or substances which meet applicable requirements and standards specified by other rules of Regulation III.

**307.3** The spraying or other employment of insecticides, pesticides or herbicides.

**307.4** Foundries; smelters; melting or roasting of metal, ore, or dross; all operations included under Standard Industrial Classification codes 3312, 3313, 332, 333, 334, 336, and 3398; and all on-site mold making activities at such operations and industries.

## SECTION 400 - ADMINISTRATIVE REQUIREMENTS

**401** **COMPLIANCE SCHEDULE:** Any person employing a control device as of September 21, 1992, to meet the emissions reductions requirement of this rule shall by November 20, 1992, file an Operation and Maintenance Plan with the Control Officer pursuant to Section 501 of this rule.

## SECTION 500 - MONITORING AND RECORDS

**501** **PROVIDING AND MAINTAINING MONITORING DEVICES:** Any person incinerating, adsorbing, or otherwise processing organic materials pursuant to this rule shall provide, properly install and maintain in calibration, in good working order and in operation, devices specified in the Operation and Maintenance Plan as well as in either the Permit to Operate or the Installation Permit for indicating temperatures, pressures, rates of flow, or other operating conditions necessary to determine if air pollution control equipment is functioning properly and is properly maintained.

**502** **DETERMINATION OF COMPLIANCE:** Determination of the organic solvent content and composition of a solvent or material shall be made as of the time that the solvent or material is in

its final form for application or employment, notwithstanding any prior blending, reducing, thinning or other preparation for application or employment. Emissions resulting from air or heat drying of products for the first 12 hours after the removal from any machine, equipment, device or other article shall be included in determining compliance with this rule.

**503 RECORDKEEPING AND REPORTING:** Any person subject to this rule shall comply with the following requirements. Records shall be retained for five years and shall be made available to the Control Officer upon request.

**503.1 Current List:** Maintain a current list of coatings, adhesives, makeup solvents, and any other VOC-containing materials; state the VOC content of each in pounds per gallon or grams per liter. VOC content shall be expressed less water and non-precursor compounds for materials which are not used for cleaning or cleanup.

**503.2 Monthly Usage Records:** Maintain monthly records of the amount of each coating; adhesive; makeup solvent; solvent used for surface preparation, for cleanup, and for the removal of materials; and any other VOC-containing material used. Identify any materials subject to the emission limits in Section 301 or Section 302 and keep separate totals for these materials.

**503.3 Operation and Maintenance:** Maintain a continuous record of the times an approved emission control device is used to comply with this rule. Maintain daily records of the O&M Plan's key system operating parameters. Account for any periods of operation when the control device was not operating. Maintain records of all maintenance performed according to the O&M Plan.

**503.4 Discarded Materials:** Maintain records of the type, amount, and method of disposing of VOC-containing materials on each day of disposal.

**504 TEST METHODS:**

**504.1** Measurement of VOC content of materials shall be conducted and reported in accordance with EPA Test Method 24 (40 CFR 60, Appendix A).

**504.2** The non-complying organic compound content shall be determined using the ASTM Standard Recommended Practices for General Gas Chromatography Procedures, E 260-85; General Techniques of Infrared Quantitative Analysis, E 168-67; or General Techniques of Ultraviolet Quantitative Analysis, E 169-87.

**504.3** Measurements of the water and exempt solvent vapor content shall be conducted in accordance with ASTM Test Methods D 4457-85 and D 3792-86.

**504.4** Measurement of VOC emissions subject to this rule shall be conducted in accordance with EPA Test Method 18 and/or by EPA Method 25 or an applicable submethod of Method 25 (40 CFR 60, Appendix A), in combination with the appropriate capture efficiency method.

**504.5** Capture/control efficiency shall be determined by mass balance in combination with ventilation/draft rate determinations or by "Using a Temporary Total Enclosure for Capture Efficiency Testing", EPA-450/4-91-020.

**504.6** Ventilation/draft rates shall be determined by EPA Methods 2, 2a, 2c, and 2d.

**504.7** Temperature measurements shall be done with an instrument with an accuracy and precision of less than one-half degree Fahrenheit (0.25°C) for temperatures up to 480°F (250°C). Higher temperatures shall be determined by instruments no less accurate than 1.0 percent of full scale unless the Control Officer specifies greater accuracy.

## REGULATION III - CONTROL OF AIR CONTAMINANTS
## RULE 331
## SOLVENT CLEANING

### INDEX

**SECTION 100 – GENERAL**

101 PURPOSE

102 APPLICABILITY

**SECTION 200 – DEFINITIONS**

201 AGITATION, AGITATED

202 BATCH CLEANING MACHINE

203 BLASTING/MISTING WITH SOLVENT

204 CABINET STYLE CLEANING MACHINES

205 CARRY-OUT

206 CLEANING-SOLVENT

207 CONFORMING SOLVENT

208 DEGREASER

209 DRY SOLID

210 EMISSION CONTROL SYSTEM (ECS)

211 FLUSHING WITH SOLVENT

212 FREEBOARD HEIGHT

213 FREEBOARD RATIO

214 HEATED SOLVENT

215 IMPERVIOUS

216 IN-LINE CLEANING MACHINE (CONTINUOUS CLEANING MACHINE)

217 JANITORIAL CLEANING

218 LEAK

219 LOW-VOC CLEANER

220 MAKE-UP SOLVENT

221 MATERIAL VOC CONTENT

222 NON-CONFORMING SOLVENT

~~223 NON-PRECURSOR ORGANIC COMPOUND~~

~~224~~ 223 ORGANIC COMPOUND

~~225~~ 224 REFRIGERATED FREEBOARD CHILLER

~~226~~ 225 REMOTE RESERVOIR CLEANING MACHINE (DEGREASER)

~~227~~ 226 SEALED SYSTEM

~~228~~ 227 SOLVENT

~~229~~ 228 SOLVENT CLEANING MACHINE (CLEANING MACHINE) (DEGREASER)

~~230~~ 229 SOLVENT/AIR INTERFACE

~~231~~ 230 SOLVENT/AIR INTERFACE AREA

~~232~~ 231 TOTAL VOC VAPOR PRESSURE (VOC COMPOSITE PARTIAL PRESSURE)

~~233~~ 232 VAPOR CLEANING MACHINE

~~234~~ 233 VOC CONTENT OF MATERIAL

~~235 VOLATILE ORGANIC COMPOUND (VOC)~~

~~236~~ 234 WIPE CLEANING

**SECTION 300 – STANDARDS**

301 SOLVENT HANDLING REQUIREMENTS

302 EQUIPMENT REQUIREMENTS FOR ALL CLEANING MACHINES

303 SPECIFIC OPERATING & SIGNAGE REQUIREMENTS FOR CLEANING MACHINES

304 SOLVENT SPECIFICATIONS FOR NON-VAPOR CLEANING AND DEGREASING

305 NON-VAPOR BATCH CLEANING MACHINES

306 NON-VAPOR IN-LINE CLEANING MACHINES

307 SPECIAL NON-VAPOR CLEANING SITUATIONS

308 EXEMPTIONS

309 REQUIREMENTS FOR AIR POLLUTION CONTROL EQUIPMENT AND ECS MONITORING EQUIPMENT

**SECTION 400 - ADMINISTRATIVE REQUIREMENTS (NOT APPLICABLE)**

**SECTION 500 - MONITORING AND RECORDS**

501 RECORDKEEPING AND REPORTING

502 COMPLIANCE DETERMINATION AND TEST METHODS

**APPENDIX TO RULE 331**

VAPOR CLEANING MACHINES AND EMISSION CONTROL SYSTEMS

**Revised 07/13/88**
**Revised 06/22/92**
**Revised 06/19/96**
**Revised 04/07/99**
**Revised 04/21/04**
**Revised 09/25/13**

**MARICOPA COUNTY**
**AIR POLLUTION CONTROL REGULATIONS**

**REGULATION III - CONTROL OF AIR CONTAMINANTS**

**RULE 331**
**SOLVENT CLEANING**

**SECTION 100 – GENERAL**

**101** **PURPOSE:** To limit the emissions of volatile organic compounds (VOCs) from cleaning operations.

**102** **APPLICABILITY:** This rule is applicable to operations using VOC-containing solvents to remove impurities from exterior or interior surfaces. Compliance with the provisions of this rule shall not relieve any person subject to the requirements of this rule from complying with any other federally enforceable requirements. In such case, the more stringent requirement shall apply. In any instance where more than one of the requirements set forth in this rule may be applicable, the most restrictive requirement shall apply.

**102.1** Solvents regulated by this rule may also be regulated by New Source Performance Standards (NSPS) in Rule 360 of these rules and/or National Emission Standards for Hazardous Air Pollutants (NESHAPs) in Rule 370 of these rules.

**102.2** This rule is not applicable to:

**a.** A solvent cleaning operation that is subject to or specifically exempted by an EPA approved version of another rule within Regulation III of these rules.

**b.** Janitorial cleaning.

**c.** Testing for surface cleanliness or the cleaning of laboratory equipment at the laboratory.

**d.** A cleaning-solvent that meets any of the following:

**(1)** Is composed of at least 98% water by either weight or volume; or

**(2)** Contains only water and material which is a dry solid before mixing with water; or

**(3)** Has a VOC content not exceeding 20 grams per liter (0.17 lb/gal).

**102.3** Partial or conditional exemptions from this rule are set forth in Section 308 of this rule.

**SECTION 200 – DEFINITIONS:** ~~See Rule 100 (General Provisions And Definitions) of these rules for definitions of terms that are used but not specifically defined in this rule. For the purpose of this rule, the following definitions shall apply:~~ For the purpose of this rule, the following definitions shall apply, in addition to those definitions found in Rule 100 (General Provisions and Definitions) of these rules. In the event of any inconsistency between any of the Maricopa County air pollution control rules, the definitions in this rule take precedence.

**201** **AGITATION, AGITATED –** A means or state that moves cleaning liquid continuously back and forth, or up and down. This includes such motion created by sound waves, and to the splashing of a rinse stream operated at a pressure that creates a trajectory exceeding 2 feet along the horizontal plane intersecting the nozzle when the nozzle is at a 45° angle above the plane. Liquid motion incidental to a continuous entrance or withdrawal of objects undergoing cleaning is not agitation.

**202** **BATCH CLEANING MACHINE –** A solvent cleaning machine in which individual parts or a set of parts move through the entire cleaning cycle before new parts are introduced into the solvent cleaning machine. A solvent cleaning machine, such as a ferris wheel or a cross-rod degreaser, that cleans multiple batch loads simultaneously and is manually loaded, is a batch cleaning machine.

**203** **BLASTING/MISTING WITH SOLVENT –** Cleaning with an applicator that propels cleaning-solvent through the air with a pressure exceeding 10 psig (516 mm Hg), or that atomizes the solvent into mist and/or droplets.

**204** **CABINET STYLE CLEANING MACHINES –** Cleaning machines typically similar in design to domestic dishwashers that are completely enclosed except for optional stack, and have their own reservoir and sump.

**205** **CARRY-OUT –** Solvent carried out of a cleaning machine along with a part being removed from the cleaning machine. The solvent may exist as a liquid coating the part or the part's hanger, or as a liquid entrapped in cavities and irregular surfaces, or entrapped by capillary action within or on the part.

**206** **CLEANING-SOLVENT –** Solvent used for cleaning that contains more than2.0% VOC by weight and more than 20 grams of VOC per liter (0.17 lb/gal).

**207** **CONFORMING SOLVENT -** A cleaning-solvent having a total VOC vapor pressure at 68°F (20°C) not exceeding 1 millimeter of mercury column.

**208** **DEGREASER –** See **SOLVENT CLEANING MACHINE.**

**209** **DRY SOLID -** Any substance that appears and feels dry. Evaporating solids, all of which have a strong odor, are not included.

**210** **EMISSION CONTROL SYSTEM (ECS) -** A system for reducing emissions of volatile organic compounds, consisting of both a capture system and control device(s).

**211** **FLUSHING WITH SOLVENT -** Introducing cleaning-solvent directly into the internal space(s) of an object or assembly using a hose or pipe. Rinsing the outside of an object or assembly and swishing an object or assembly in cleaning solvent are not considered flushing with solvent. Such activities must comply with Section 303.1 of this rule.

**212** **FREEBOARD HEIGHT –**

**212.1** **Batch Cleaning Machine:** The vertical distance from the solvent/air interface to the least elevated point of the top-rim when the cover is open or removed, measured during idling mode.

**212.2** **In-Line Cleaning Machine:** The vertical distance from the solvent/air interface to the lowest entry/exit point, measured during idling mode.

**213** **FREEBOARD RATIO –** The ratio of the solvent cleaning machine freeboard height to the smaller interior dimension (length, width, or diameter) of the solvent cleaning machine.

**214** **HEATED SOLVENT -** Any cleaning-solvent which is heated by a device to a temperature exceeding 120°F (49°C).

**215** **IMPERVIOUS –** Neither absorbing, adsorbing, nor allowing penetration through, by liquid or vapors.

**216** **IN-LINE CLEANING MACHINE (CONTINUOUS CLEANING MACHINE) –** A solvent cleaning machine that uses an automated handling system, typically a conveyor or automated arm(s), to automatically provide a continuous supply of items to be cleaned. The cleaned item leaves by a route different from its entry route.

**217** **JANITORIAL CLEANING –** The cleaning of building or facility components to keep work areas in clean condition. Building or facility components include, but are not limited to, floors, ceilings, walls, windows, doors, stairs, bathrooms, furnishings, textiles, wash rags, uniforms, and exterior surfaces of office equipment.

**218** **LEAK –** The state or condition in which a cleaning-solvent, excluding a Low-VOC Cleaner, is allowed to seep or drip, or otherwise enters or escapes, at either of the following rate or magnitude:

**218.1** Three or more drops of liquid cleaning-solvent per minute; or

**218.2** Any puddle of cleaning-solvent greater than 1 square inch.

**219** **LOW-VOC CLEANER -** Any solution or homogeneous suspension that, as used, contains less than 50 grams of VOC per liter of material (0.42 lb VOC/gal) or is at least 95% water by weight or volume as determined by an applicable test method in Section 502 of this rule.

**220** **MAKE-UP SOLVENT -** A cleaning-solvent that replaces solvent lost through evaporation or other means, and that is added to the solvent remaining in a cleaning machine (degreaser) to bring solvent quantity to the desired level.

**221** **MATERIAL VOC CONTENT –** See **VOC CONTENT OF MATERIAL**.

**222** **NON-CONFORMING SOLVENT -** A cleaning-solvent having a total VOC vapor pressure at 68°F (20°C) exceeding 1 millimeter of mercury column.

~~**223** **NON-PRECURSOR ORGANIC COMPOUND** – Any of the organic compounds which have been designated by the EPA as having negligible photochemical reactivity. EPA designates such compounds as "exempt". A listing of the compounds is found in Rule 100.~~

~~224~~223 **ORGANIC COMPOUND –** Any compound of carbon, excluding carbon monoxide, carbon dioxide, carbonic acid, metallic carbides or carbonates, and ammonium carbonate.

~~225~~224 **REFRIGERATED FREEBOARD CHILLER –** A control device which is mounted above any cooling-water jacket or primary condenser coils, consisting of secondary coils which carry a refrigerant to provide a chilled air blanket above the solvent vapor/air interface to reduce emissions from the cleaning machine (degreaser) bath.

~~226~~225 **REMOTE RESERVOIR CLEANING MACHINE (DEGREASER) -** Any nonvapor cleaning machine (degreaser) in which the reservoir for storing the cleaning-solvent is completely separated by impervious surfaces from the sink or basin where cleaning is performed, except for a connecting tube through which solvent returns to the reservoir when cleaning is stopped.

~~227~~226 **SEALED SYSTEM -** An Air-tight or Airless Cleaning System that is operated and equipped pursuant to Section 304.3 of this rule.

~~228~~227 **SOLVENT –** For the purpose of this rule, any liquid or vapor which is used to dissolve, clean, strip, or remove impurities, coatings, contaminants, or films from surfaces or from internal spaces and voids. In addition to VOC-containing solvents, this also includes plain water and mixtures containing water.

~~229~~228 **SOLVENT CLEANING MACHINE (CLEANING MACHINE) (DEGREASER) -** Any liquid container and ancillary equipment designed to clean surfaces and/or remove surface contaminants using cleaning-solvents.

~~230~~229 **SOLVENT/AIR INTERFACE –**

~~230.1~~229.1 **Non-Vapor Cleaner:** The location of contact between the liquid solvent and the air.

~~230.2~~229.2 **Vapor Cleaner:** The location of contact between the concentrated layer of solvent vapor and the air.

~~231~~230 **SOLVENT/AIR INTERFACE AREA –**

~~231.1~~230.1 **Non-Vapor Cleaner:**

a. **With Included/Integral Reservoir:** The surface area of liquid cleaning-solvent that is exposed to the air.

b. **With Remote Reservoir:** The surface area of the solvent sink or work area.

~~231.2~~230.2 **Vapor Cleaner:** The area of the horizontal plane that is located halfway between the highest and lowest points of the primary condenser coils and which contacts the interior walls of the cleaning machine.

~~232~~231 **TOTAL VOC VAPOR PRESSURE (VOC COMPOSITE PARTIAL PRESSURE) -** Within a solution or homogenous mixture, it is the sum of the partial pressures of all those components that are defined as VOCs, calculated according to the formula in Section 502.3 of this rule.

~~233~~232 **VAPOR CLEANING MACHINE -** Any cleaning machine in which solvent-vapor from boiling cleaning solvent is utilized for cleaning object.

~~234~~233 **VOC CONTENT OF MATERIAL (MATERIAL VOC CONTENT) -**

VOC CONTENT OF MATERIAL as a percent = $\frac{W_s - W_w - W_{es}}{W_m}$ X 100%

Using consistently either pounds or grams in the calculations:
Where:

$W_s$ = weight of volatile material in pounds (or grams), including water, non-precursor organic compounds, and dissolved vapors.

$W_w$ = weight of water in pounds (or grams)

$W_{es}$ = total weight of non-precursor organic compounds in pounds (or grams)

$W_m$ = weight of total material in pounds (or grams)

VOC CONTENT OF MATERIAL in pounds per gallon (g/l) = $\frac{W_s - W_w - W_{es}}{V_m}$

Using consistently either English or metric measures in the calculations
Where:

$W_s$ = weight of all volatile material in pounds (or grams) including VOC, water, non-precursor organic compounds and dissolved vapors.

$W_w$ = weight of water in pounds (or grams)

$W_{es}$ = weight of all non-precursor compounds in pounds (or grams)

$V_m$ = volume of total material in gallons (or liters)

~~235~~ ~~**VOLATILE ORGANIC COMPOUND (VOC)** - Any organic compound which participates in atmospheric photochemical reactions, except non-precursor organic compounds.~~

~~236~~234 **WIPE CLEANING -** That method of removing contaminants from a surface by physically rubbing or automatically rubbing with a porous or absorbent material, such as a rag, paper, sponge, or cotton swab, moistened with a solvent.

**SECTION 300 - STANDARDS**

**301 SOLVENT HANDLING REQUIREMENTS:** Any person to whom this rule applies must comply with all of the following:

**301.1** All cleaning-solvent, including solvent soaked materials, shall be kept in closed, leakfree, impervious containers that are opened only when adding or removing material.

**a.** Porous or absorbent materials used for wipe cleaning shall be stored in closed containers when not in use.

**b.** Each container shall be clearly labeled with its contents.

**301.2** If any cleaning-solvent escapes from a container:

**a.** Wipe up or otherwise remove immediately if in accessible areas.

**b.** For areas where access is not feasible during normal production, remove as soon as reasonably possible.

**301.3** Unless records show that VOC-containing cleaning material was sent offsite for legal disposal, it will be assumed that it evaporated on site.

**302 EQUIPMENT REQUIREMENTS FOR ALL CLEANING MACHINES:** Any person operating a cleaning machine to which this rule applies must comply with all of the following:

**302.1** Provide a leakfree, impervious container (degreaser) for the solvents and the articles being cleaned.

**a.** The VOC-containment portion shall be impervious to VOC-containing liquid and vapors.

**b.** No surface of any freeboard required by this rule shall have an opening or duct through which VOC can escape to the atmosphere, except as controlled by an ECS, or as required by OSHA.

**302.2** Properly maintain and operate all cleaning machine equipment required by this rule and any of its emission controls required by this rule.

**303 SPECIFIC OPERATING & SIGNAGE REQUIREMENTS FOR CLEANING MACHINES:** Any person who cleans with cleaning-solvent other than a Low-VOC Cleaner must conform to all of the following operating requirements:

**303.1 Operating Requirements:**

**a. Fans:** Do not locate nor position comfort fans in such a way as to direct airflow across the opening of any cleaning machine.

**b. Cover:** Do not remove any device designed to cover the solvent unless processing work in the cleaning machine or maintaining the machine.

**c. Draining:** Drain cleaned parts for at least 15 seconds after cleaning or until dripping ceases, whichever is later.

**d. Spraying:** If using a cleaning-solvent spray system,

**(1)** Use only a continuous, undivided stream (not a fine, atomized, or shower type spray).

**(2)** Pressure at the orifice from which the solvent emerges shall not exceed 10 psig and shall not cause liquid solvent to splash outside of the solvent container.

**(3)** In an in-line cleaning machine, a shower-type spray is allowed, provided that the spraying is conducted in a totally confined space that is separated from the environment.

**(4)** Exceptions to foregoing Sections 303.1d(1), (2), and (3) are provided for in Section 307 of this rule.

**e. Agitation:** No person shall cause agitation of a cleaning-solvent in a cleaning machine by sparging with air or other gas. Covers shall be placed over ultrasonic cleaners when the cleaning cycle exceeds 15 seconds.

**f. No Porous Material:**

**(1)** Do not clean nor use porous or absorbent materials to clean parts or products in a cleaning machine. For the purpose of this rule, porous or absorbent materials include, but are not limited to, cloth, leather, wood, and rope.

**(2)** Do not place an object with a sealed wood handle, including a brush, in or on a cleaning machine.

**(3)** Do not place porous or absorbent materials, including, but not limited to, cloth, leather, wood, and rope on a cleaning machine.

**g.** **Vent Rates:** The ventilation rate at the cleaning machine shall not exceed 65 cfm per square foot of evaporative surface (20 $m^3$/min./$m^2$), unless that rate must be changed to meet a standard specified and certified by a Certified Safety Professional, a Certified Industrial Hygienist, or a licensed professional engineer experienced in ventilation, to meet health and safety requirements.

**h.** **Hoist Speed:** Limit the vertical speed of mechanical hoists moving parts in and out of the cleaning machine to a maximum of 2.2 inches per second and 11 ft/min. (3.3 m/min.).

**i.** **Contamination Prevention:** Prevent cross contamination of solvents regulated by Section 304 of this rule with solvents that are not so regulated. Use signs, separated work-areas, or other effective means for this purpose. This includes those spray gun cleaning solvents that are regulated by another rule of these rules.

**j.** **Filtration Devices:** If a filtration device (e.g., to remove oils, greases, sludge, and fine carbon from cleaning solvent) is inherent in the design of the cleaning machine, then such filtration device shall be operated in accordance with manufacturer's specifications and in accordance with the following requirements:

**(1)** The filtration device shall be fully submerged in cleaning solvent at all times during filtration.

**(2)** When the filtration device is completely saturated and must be removed from the cleaning machine, the filtration device shall be drained until no liquid can flow from the filtration device. Draining and drying such filtration device shall be conducted in a sealed container with no exhaust to the atmosphere or work area.

**(3)** After the filtration device is dry, the filtration device shall be stored in a closed, leakfree, impervious container that is legibly labeled with its contents and that remains covered when not in use. Disposal of the filtration device shall be done in a manner that inhibits VOC evaporation and that is in compliance with appropriate/legal methods of disposal.

**303.2** **Signage Requirements:** Any person who uses cleaning-solvent, other than Low-VOC Cleaner, in any solvent cleaning machine (degreaser) or dip tank shall provide on the machine, or within 3¼ feet (1 meter) of the machine, a permanent, conspicuous label or placard which includes, at a minimum, each of the following applicable instructions, or its equivalent:

**a.** "Keep cover closed when parts are not being handled." (This is not required for remote reservoir cleaners.)

**b.** "Drain parts until they can be removed without dripping."

**c.** "Do not blow off parts before they have stopped dripping."

**d.** "Wipe up spills and drips as soon as possible; store used spill rags [or 'wiping material'] in covered container."

**e.** **"**Don't leave cloth or any absorbent materials in or on this tank."

**f.** For cleaning machines with moving parts such as hoists, pumps, or conveyors, post: "Operating instructions can be obtained from _____," listing a person or place where the instructions are available.

**304** **SOLVENT SPECIFICATIONS FOR NON-VAPOR CLEANING AND DEGREASING:** [Operating requirements specifically for vapor cleaning machines are in the Appendix.] All cleaning solvents, except Low-VOC Cleaners, used in non-boiling cleaning machines shall comply with Section 304.1 or Section 304.2 or Section 304.3, as follows:

**304.1** Use a cleaning-solvent having a total VOC vapor pressure at 68°F (20°C) not exceeding 1 millimeter of mercury column, as determined by the standards described in Section 500 of this rule.

**304.2** **ECS:** Use an ECS to capture and process VOC emissions in accordance with Section IV of the Appendix within this rule; or

**304.3** **Sealed System:** Use a Sealed System that is an Air-tight or Airless Cleaning System which is operated according to the manufacturer's specifications and, unless otherwise indicated by the manufacturer, meets all of the following requirements:

**a.** Has a door or other pressure-sealing apparatus that is shut during each cleaning and drying cycle; and

**b.** Has a differential pressure gauge that always indicates the pressure in the sealed chamber when occupied or in active use; and

**c.** Any associated pressure relief device(s) shall be so designed and operated as to prevent liquid cleaning-solvents from draining out.

**305** **NON-VAPOR BATCH CLEANING MACHINES:** Equipment requirements for non-vapor batch cleaning machines with remote reservoirs are set forth in Section 305.1 of this rule. Equipment standards applicable to non-vapor batch cleaning machines with internal reservoirs (non-remote) are set forth in Section 305.2 of this rule. Non-vapor batch cleaning machines with either remote or internal reservoirs that use cleaning-solvents that are either heated, agitated or non-conforming are subject to additional provisions set forth in Section 305.3 of this rule. Low-VOC Cleaners are exempt from this section.

**305.1** **With Remote Reservoir:** A batch cleaning machine with remote reservoir, including cabinet type(s), shall be equipped with the following:

**a.** A sink-like work area or basin which is sloped sufficiently towards the drain so as to prevent pooling of cleaning-solvent.

**b.** A single, unimpeded drain opening or cluster of openings served by a single drain for the cleaning-solvent to flow from the sink into the enclosed reservoir. Such opening(s) shall be contained within a contiguous area not larger than 15.5 square inches (100 $cm^2$).

**c.** **Solvent Return:** Provide a means for drainage of cleaned parts such that the drained solvent is returned to the cleaning machine.

**305.2** **With Internal Reservoir (Non-Remote):** A batch cleaning machine without a remote reservoir shall be equipped with all of the following:

**a.** Have and use an internal drainage rack or other assembly that confines within the freeboard all cleaning-solvent dripping from parts and returns it to the hold of the cleaning machine (degreaser); and

**b.** Have an impervious cover which when closed prevents cleaning-solvent vapors in the cleaning machine from escaping into the air/atmosphere when not processing work in the cleaning machine.

**(1)** A cover shall be fitted so that in its closed position the cover is between the cleaning-solvent and any lip exhaust or other safety vent, except that such position of cover and venting may be altered by an operator for valid concerns of flammability established in writing and certified to by a Certified Safety Professional or a Certified Industrial Hygienist to meet health and safety requirements.

**(2)** A cover is not required when an ECS is used in accordance with Section IV of the Appendix within this rule.

**c.** In the absence of additional applicable freeboard standards, freeboard height shall be not less than 6 inches (15.2 cm); and

**d.** The freeboard zone shall have a permanent, conspicuous mark that locates the maximum allowable solvent level which conforms to the applicable freeboard requirements.

**305.3 Using Cleaning-Solvent That Is Heated, Agitated, Or Is Non-Conforming:** If a cleaning machine uses a cleaning-solvent at a temperature above 120°F (49°C), uses non-conforming solvent if allowed by Section 305.3(d) of this rule, or agitates the solvent, then comply with one of the following:

**a. Remote Reservoir Cleaning Machines:** For a remote reservoir cleaning machine, comply with Section 305.1 of this rule and one of the following:

**(1)** Use a stopper in the drain whenever the sink or cabinet is empty of solvent and nothing is being handled in the sink; or

**(2)** Cover the sink or cabinet whenever the sink or cabinet is empty of solvent and nothing is being handled in the sink.

**b. Internal Reservoir Cleaning Machines:** For an internal reservoir cleaning machine, comply with Section 305.2 of this rule and either Section (1) or (2) that follow:

**(1) A Water Cover:** A floating layer of water (insoluble in the solvent) at least 1 inch thick, and a freeboard at least 6 inches above the top of the solvent shall be present; or

**(2) Freeboard And Cover:**

**(a)** The basin shall have a freeboard ratio of 0.75 or greater and an impervious cover shall cover the basin whenever work is not being processed; and

**(b)** If a non-conforming solvent is used, the cover shall be of a sliding or rolling type which is designed to easily open and close in a horizontal plane without disturbing the vapor zone.

**c. Cabinet Style:** Keep a cabinet-style cleaning machine closed at all times that it contains cleaning-solvent, except when introducing or removing work from the machine. If blasting or misting with cleaning-solvent, also conform to the applicable requirements of Section 307 of this rule.

**d. Non-Conforming Solvent:** A non-conforming solvent may be used in operations to which this rule applies, if at least one of the following is met:

**(1)** The emissions from the operation shall be controlled by an ECS per Section 304.2 of this rule or by a Sealed System per Section 304.3 of this rule; or

**(2)** The operation is exempted per Section 308.2 of this rule; or

**(3)** The operation is both exempted per Section 308.3 of this rule and complies with Section 305.3 of this rule, or for in-line machines, complies with all of Section 306 of this rule except Section 306.4 of this rule.

**305.4 ECS Alternative:** An owner and/or operator is allowed to meet the requirements of any one or combination of the requirements of Sections 305.1, 305.2 and/or 305.3 of this rule by operating an ECS in accordance with Section IV of the Appendix within this rule whenever any requirement of Sections 305.1, 305.2 and/or 305.3 of this rule is not met.

**306 NON-VAPOR IN-LINE CLEANING MACHINES:** No person shall operate a non-vapor in-line cleaning machine using cleaning-solvent unless it complies with Sections 306.1, 306.2, and 306.3 of this rule:

**306.1 Features:**

**a. Carry-Out Prevention:** Equip the cleaning machine with either a drying tunnel or another means, such as a rotating basket, sufficient to prevent cleaned parts from carrying out cleaning-solvent liquid or vapor.

**b. Enclosed Design:** An in-line cleaning machine shall be fully enclosed except for entrance and exit portals.

**c. Cover:** During shutdown hours or if the cleaning machine is idle for more than 30 minutes, a cover shall be used to close the entrance and exit and any opening greater than 16 square inches (104 $cm^2$).

**306.2 Minimized Openings:** Entrances and exits should silhouette workloads so that the average clearance between parts and the edge of the cleaning machine opening is either less than four inches (10 cm), or less than 10% of the width of the opening.

**306.3** The machine shall have a freeboard ratio greater than or equal to 0.75.

**306.4 ECS Alternative:** An owner and/or operator is allowed to meet the requirements of any one or combination of Sections 306.1(b), 306.1(c), 306.2, and/or 306.3 of this rule by operating an ECS that controls VOC vapor from processes addressed by the requirement(s). Such ECS shall be operated in accordance with Section IV of the Appendix within this rule.

**307 SPECIAL NON-VAPOR CLEANING SITUATIONS:**

**307.1 Blasting/Misting With Conforming Solvent:** Any person blasting or misting with conforming solvent shall operate and equip the device(s) as follows:

**a. Equipment:** The device shall have internal drainage, a reservoir or sump, and a completely enclosed cleaning chamber, designed so as to prevent any perceptible liquid from emerging from the device; and

**b. Operation:** The device shall be operated such that there is no perceptible leakage from the device except for incidental drops from drained, removed parts.

**307.2 Blasting/Misting With Non-Conforming Solvent:** Any person shall use a Sealed System pursuant to Section 304.3 of this rule for all blasting or misting with a non-conforming solvent.

**307.3** **High Pressure Flushing:** Cleaning systems using cleaning-solvent that emerges from an object undergoing flushing with a visible mist or at a pressure exceeding 10 psig, shall comply as follows:

**a.** **Conforming Solvent:** For conforming solvent, use a containment system that is designed to prevent any perceptible cleaning-solvent liquid from becoming airborne outside the containment system, such as a completely enclosed chamber.

**b.** **Non-Conforming Solvent:** Use a Sealed System for non-conforming solvent.

**307.4** **ECS Alternative:** An owner and/or operator is allowed to meet the requirement(s) of Section 307.1 and/or Section 307.2 of this rule by operating an ECS that controls VOC vapor from processes addressed by the requirement(s). The ECS shall be operated pursuant to Section IV of the Appendix within this rule.

## 308 EXEMPTIONS:

### 308.1 Categorical Exemptions:

**a.** Industries and cleaning operations that are not regulated by this rule include, but are not limited to, the following EPA approved versions of the VOC rules in Regulation III of these rules:

**(1)** Dry cleaning with petroleum solvents (Rule 333);

**(2)** Printing and graphic arts coating (Rule 337);

**(3)** Semiconductor manufacturing (Rule 338);

**(4)** Automotive windshield washer fluid (Rule 344); and

**(5)** Architectural Coating (Rule 335).

**b.** All operations regulated by the following NESHAPs are exempt from Rule 331:

**(1)** National Emission Standards for Halogenated Solvent Cleaning (40 CFR 63, subpart T). This includes the de minimis amounts of solvent VOCs that are exempted by subpart T.

**(2)** National Emission Standards for Perchloroethylene for Dry Cleaning Facilities, (40 CFR 63, subpart M).

**c. Exemptions For Qualified Operations:**

**(1) Cleanup Of Coating-Application Equipment:** Operations involving the cleanup of coating-application equipment that are subject to or specifically exempted by an EPA approved version of another rule in Regulation III of these rules are exempt from Rule 331. Examples include Rule 336 (Surface Coating Operations), Rule 342 (Coating Wood Furniture And Fixtures), and Rule 346 (~~Wood Coating~~ Coating Wood Millwork).

**(2) Aerospace:** Wipe cleaning of aerospace components is subject to Rule 348 of these rules, whereas the cleaning of aerospace components in a dip tank or a cleaning machine is subject to Rule 331.

**308.2 Partial Exemption From Section 300:** The following are exempt from sections of Section 300 of this rule as noted:

**a. Wipe Cleaning:** The provisions of Sections 302 through 307 of this rule do not apply to wipe cleaning. Recordkeeping provisions in Section 500 of this rule do apply to wipe cleaning.

**b. Small Cleaners:** The provisions of Sections 303 through 307 of this rule shall not apply to any non-vapor cleaning machine (degreaser) or dip-tank fitting either of the following descriptions, except that these shall be covered when work is not being processed:

**(1)** A small cleaner having a liquid surface area of 1 square foot (0.09 square meters) or less, or

**(2)** A small cleaner having a maximum capacity of one gallon (3.79 liters) or less.

**308.3 Exemptions From Section 304:** The U.S. Government Printing Office "Standard Industrial Classification Manual, 1987" (and no future editions) is incorporated by reference and is on file at the Maricopa County ~~Environmental Services~~ Air Quality Department, 1001 N. Central ~~Avenue~~ Ave., ~~Suite 201~~, Phoenix, Arizona 85004~~-1942~~. The following are exempt from Section 304 of this rule:

**a.** Non-furniture medical devices included in Standard Industrial Classification (SIC) codes 3841, 3843, 3844, or 3845, and products for internal use in 3842;

**b.** Electronic products for space vehicles and communications equipment in SIC codes 3661, 3663, 3669, 3677, 3678, 3679, and 3769; and

**c.** Production processes having clean-room standards equal to or more stringent than class 100,000 (particles/$m^3$); and

**d.** Low viscosity solvent used to clean an aerospace component if the Federal Aviation Authority, the US Department of Defense, or a US Military specification designates that the cleanliness of the component is critical to the flight safety of a complete aerospace vehicle. By January 1, 2001, any such solvents shall be listed in ~~an MCESD~~a Maricopa County air pollution permit, conditioned upon a sufficient demonstration by the user that no compliant substitute exists.

**308.4** **Comfort Fans:** The Section 303.1(a) prohibition against fans and fan-drafts being close to cleaning machines does not apply to a totally enclosed cleaning machine that cannot be penetrated by drafts.

**308.5** **Vehicle Refinishing:** Dip cleaning of vehicle or mobile equipment surfaces is subject to this rule.

**308.6** Aerosol cans, squirt bottles, and other solvent containers intended for handheld use shall meet the requirements in Sections 301 and 500 of this rule.

**308.7** A Low-VOC Cleaner is subject only to Sections 301, 302, 307.1, 501.1(a), and 501.2 of this rule.

**309** **REQUIREMENTS FOR AIR POLLUTION CONTROL EQUIPMENT AND ECS MONITORING EQUIPMENT:** For the purpose of this rule, an ECS shall be approved in writing by the Control Officer and shall be designed and operated in accordance with good engineering practices.

**309.1** **Operation And Maintenance (O&M) Plan Required For ECS:**

**a.** **General Requirements:** An owner and/or operator shall provide and maintain (an) O&M Plan(s) for any ECS, any other emission processing equipment, and any ECS monitoring devices that are used pursuant to this rule or pursuant to an air pollution control permit. An owner and/or operator shall comply with all the identified actions and schedules provided in each O&M Plan.

**b.** **Approval By Control Officer Of Initial O&M Plan(s):** An owner and/or operator shall submit to the Control Officer for written approval the O&M Plan(s) of each

ECS and each ECS monitoring device that is used pursuant to this rule. While the Control Officer is reviewing for approval the O&M Plan(s), an owner and/or operator shall comply with all the identified actions and schedules provided in each O&M Plan submitted for approval, unless notified otherwise by the Control Officer. After the Control Officer has issued written approval of the O&M Plan(s), an owner and/or operator shall continue to comply with all the identified actions and schedules provided in each O&M Plan.

**c. Owner And/Or Operator Revisions To Initial O&M Plan(s):** If an owner and/or operator submits to the Control Officer revisions to the initial O&M Plan(s) and if such revisions have been approved in writing by the Control Officer, an owner and/or operator shall comply with the revisions to the initial O&M Plan(s).

**d. Control Officer Modifications To Initial O&M Plan(s):** After discussion with the owner and/or operator, the Control Officer may modify the O&M Plan(s) in writing prior to approval of the initial O&M Plan(s). An owner and/or operator shall then comply with the O&M Plan(s) that has been modified by the Control Officer.

**309.2 Providing And Maintaining ECS Monitoring Devices:** An owner and/or operator incinerating, adsorbing, or otherwise processing VOC emissions pursuant to this rule shall provide, properly install and maintain in calibration, in good working order and in operation, devices described in the facility's O&M Plan that indicate temperatures, pressures, rates of flow, or other operating conditions necessary to determine if air pollution control equipment is functioning properly and is properly maintained.

## SECTION 400 - ADMINISTRATIVE REQUIREMENTS (NOT APPLICABLE)

## SECTION 500 - MONITORING AND RECORDS

**501 RECORDKEEPING AND REPORTING:** Any person subject to this rule shall comply with the following requirements. Records shall be retained for five years and shall be made available to the Control Officer upon request.

**501.1 Current List:**

**a.** Maintain a current list of cleaning-solvents; state the VOC-content of each in pounds VOC per gallon of material or grams per liter of material.

**b.** A facility using any cleaning-solvent subject to the vapor-pressure limits of Section 304.1 of this rule shall have on site the written value of the total VOC vapor-pressure of each such solvent, in one of the following forms:

**(1)** A manufacturer's technical data sheet,

**(2)** A manufacturer's safety data sheet (MSDS), or

**(3)** Actual test results.

**501.2 Usage Records:**

**a. Monthly:** Records of the amount of cleaning-solvent used shall be updated by the end of month for the previous month. Show the type and amount of each make-up and all other cleaning-solvent to which this rule is applicable.

**b. Annually:**

**(1) Certain Concentrates:** Use of concentrate that is used only in the formulation of Low VOC Cleaner shall be updated at least annually.

**(2) Low-VOC Cleaner:** An owner and/or operator need not keep a record of a cleaning substance that is made by diluting a concentrate with water or non-precursor compound(s) to a level that qualifies as a Low VOC Cleaner if records of the concentrate usage are kept in accordance with this rule.

**c. Grouping By VOC Content:** For purposes of recording usage, an operator may give cleaning-solvents of similar VOC content a single group-name, distinct from any product names in the group. The total usage of all the products in that group is then recorded under just one name. (In such a case, the operator must also keep a separate list that identifies the product names of the particular solvents included under the group name). To the group name shall be assigned the highest VOC content among the members of that group, rounded to the nearest 10th of a pound of VOC per gallon of material, or to the nearest gram VOC per liter of material.

**502 COMPLIANCE DETERMINATION AND TEST METHODS:** When more than one test method is permitted for a determination, an exceedance of the limits established in the rule determined by any of the applicable test methods constitutes a violation of this rule.

**502.1 Compliance Determination:** The following means shall be used to determine compliance with this rule. For routine information collection, the Control Officer may

accept a manufacturers' data sheet, data certified by an officer of the supplying company, or test data for the product model of inquiry.

**a. VOC Content:** The VOC content of solutions, dispersions, emulsions, and conforming solvents (reference Section 207 of this rule) shall be determined by one of the following methods:

**(1)** South Coast Air Quality Management District Method 313-91 as referenced in Section 502.2(f) of this rule; or

**(2)** Bay Area Air Quality Management District Method 31 as referenced in Section 502.2(e) of this rule; or

**(3)** Solids-free windshield washer solutions, in which all organic components are VOCs, may be tested using Maricopa County Reference Method #100, "Total Organic Carbon for Windshield Washer Fluids," Maricopa County Air Pollution Control Rule 344 (April 7, 1999). This method should only be used for water-based solutions containing less than 5% VOC by weight.

**b. Vapor Pressure:** Pursuant to Sections 304 and 207 of this rule, determination of the total VOC vapor-pressure (VOC composite partial-pressure) in a cleaning solution shall be performed as follows:

**(1)** For solutions known to be nearly or exactly 100% VOC, vapor pressure shall be determined by ASTM D2879-96 as referenced in Section 502.2(g) of this rule; or

**(2)** For solutions for which is known the exact quantity and chemical makeup of each evaporating component that is not a VOC, ASTM D2879-96 (referencing Section 502.2(g) of this rule) shall be used (to determine the gross composite vapor pressure) in conjunction with calculations using the vapor-pressure formula in Section 502.3 of this rule.

**(3)** When a solution's exact species and proportions are known for all ingredients, the Control Officer may use the formula in Section 502.3 of this rule in conjunction with standard reference texts or data-bases that provide the vapor pressure value of each constituent, or a combination of formula use and actual testing on real constituents (referencing Section 502.2(g) of this rule).

**c. ECS Compliance:**

**(1)** The VOC content of gaseous emissions entering and exiting an ECS shall be determined by either EPA Method 18 referred to in Section 502.2(b) of this rule, or EPA Methods 25, 25a, and 25b referred to in Section 502.2(c) of this rule.

**(2)** Capture efficiency of an emission control device used pursuant to Section 304.2, Section 305.4, Section 306.4, and/or Section 307.4 of this rule shall be determined either by the methods in Section 502.2(d) of this rule (EPA Methods 204, 204a, 204b, 204c, 204d, 204e, and 204f) or by using mass balance calculation methods in concert with the methods in Section 502.2(a) of this rule (EPA Methods 2, 2a, 2c, and 2d), and EPA guidance document, "Guidelines For Determining Capture Efficiency", January 9, 1995.

**d.** **Temperature Measurement:** Temperature measurements made pursuant to Section 214 of this rule to determine if a cleaning machine contains a "heated solvent" shall be done with an instrument having an accuracy and precision of no less than 1 degree Fahrenheit.

**502.2** **Test Methods Adopted By Reference:** The EPA test methods as they exist in the Code of Federal Regulations (CFR) (July 1, 2003), as listed below, are adopted by reference. The other test methods listed here are also adopted by reference, each having paired with it a specific date that identifies the particular version/revision of the method that is adopted by reference. These adoptions by reference include no future editions or amendments. Copies of test methods referenced in this Section 502 are available at the Maricopa County ~~Environmental Services~~ Air Quality Department, 1001 ~~North~~ N. Central ~~Avenue~~ Ave., Phoenix, AZ, 85004~~-1942~~.

**a.** EPA Methods 2 ("Determination of Stack Gas Velocity and Volumetric Flow Rate"), 2a ("Direct Measurement of Gas Volume Through Pipes and Small Ducts"), 2c ("Determination of Stack Gas Velocity and Volumetric Flow rate in Small Stacks or Ducts"), and 2d ("Measurement of Gas volumetric Flow Rates in Small Pipes and Ducts"). All 4 of the foregoing methods are in 40 CFR 60, Appendix A.

**b.** EPA Method 18 ("Measurement of Gaseous Organic Compound Emissions by Gas Chromatography") (40 CFR 60, Appendix A).

**c.** EPA Methods 25 ("Determination of Total Gaseous Nonmethane Organic Emissions as Carbon"), 25a, and 25b (40 CFR 60, Appendix A).

**d.** EPA Test Methods 204 ("Criteria For and Verification Of a Permanent or Temporary Total Enclosure"), 204a, 204b, 204c, 204d, 204e, and 204f (40 CFR 51, Appendix

M) and EPA guidance document, "Guidelines For Determining Capture Efficiency", January 9, 1995.

**e.** California's Bay Area Air Quality Management District (BAAQMD) Method 31 (April 15, 1992), "Determination of Volatile Organic Compounds in Paint Strippers, Solvent Cleaners, and Low Solids Coatings."

**f.** California's South Coast Air Quality Management District (SCAQMD) Method 313-91 (April 1997).

**g.** American Society for Testing and Materials (ASTM) Method D2879-96 (1996).

**h.** EPA guidance document, "Guidelines For Determining Capture Efficiency", January 9, 1995.

**502.3 FORMULA FOR VOC COMPOSITE PARTIAL PRESSURE:** Equivalent to: **TOTAL VOC VAPOR-PRESSURE.**

$$PP_c = \frac{\sum_{i=1}^{n} (W_i)(VP_i)/M_i}{\frac{W_w}{18} + \sum_{j=1}^{m} \frac{W_e}{M_e} + \sum_{i=1}^{n} \frac{W_i}{M_i}}$$

| | | |
|---|---|---|
| $W_i$ | = | Weight of the "*i*"th VOC compound in grams |
| $W_w$ | = | Weight of water in grams |
| $We$ | = | Weight of the "*j*"th non-precursor compound in grams |
| $M_i$ | = | Molecular weight of the "*i*"th VOC compound in grams per gram mole, e.g., one gram-mole of isopropyl alcohol weighs 60 grams |
| $M_e$ | = | Molecular weight of the "*j*"th non-precursor compound, e.g., 1 gram-mole of acetone weighs 58 grams |
| $PP_c$ | = | VOC composite partial pressure at 20°C in mm mercury (Hg) |
| $VP_i$ | = | Vapor pressure of the "*i*"th VOC compound at 20°C in mm Hg |
| 18 | = | Weight of one gram-mole of water |

## APPENDIX TO RULE 331

## VAPOR CLEANING MACHINES and EMISSION CONTROL SYSTEMS

### I. DEFINITIONS:

**(1)** **VAPOR LEVEL CONTROL SYSTEM –** A combination of a coolant sensing system and a vapor sensing system consisting of the following three sets of features:

**(A)** A condenser flow switch and thermostat which shuts off the sump heat if either the condenser coolant stops circulating or becomes warmer than 85°F (29°C); and

**(B)** A manually-reset safety switch which turns off the sump heater if the temperature sensor senses that the temperature is rising above the designed operating level at the vapor/air interface; and

**(C)** A manually-reset switch which turns off the spray-system pump if the level of the vapor/air interface drops more than 4 inches (10 cm).

**II. BATCH-LOADED VAPOR CLEANING MACHINES:**

**(1)** No person shall operate a batch vapor cleaning machine, unless the machine meets National Emission Standards for Halogenated Solvent Cleaning (subpart T, Rule 370), as if the cleaning solvent in use were subject to subpart T standards.

**(2)** No person shall operate a batch vapor cleaning machine, unless the machine has a vapor/air interface Fahrenheit temperature no greater than 30% of the solvent's boiling point temperature or no greater than 40.0°F (4.4°C), whichever is lower.

**(3)** Sections II(1) and II(2) of this Appendix shall not apply, if a batch vapor cleaning machine is equipped with all of the following:

**(A)** **Cover:** An impermeable cover that is a sliding, rolling, fanning, or guillotine (bi-parting) type which is designed to easily open and close without disturbing the vapor zone.

**(B)** **A Vapor Level Control System.**

**(C)** **Primary Condenser:** A primary condenser that maintains an exit temperature not exceeding 85°F (29°C) or is equipped pursuant to Section II(3)(F)(ii) of this Appendix.

**(D)** **Freeboard Ratio:** A freeboard ratio that is greater than or equal to 0.75.

**(E)** **Lip Exhausts:** Vapor cleaning machines with lip exhausts shall be controlled by an ECS.

**(F)** **Refrigeration Or ECS:** Batch vapor cleaning machines having any of the following descriptors shall comply with Sections II(3)(F)(i), II(3)(F)(ii), or II(3)(f)(iii) of this Appendix:

• an evaporative surface area equal to or greater than 10.75 $ft^2$ (1.0 $m^2$); or

• installed or subject to major modification after November 1, 1999; or

• having average monthly VOC emissions exceeding 31 pounds VOC per square foot of solvent surface area:

**(i)** A refrigerated freeboard chiller for which the chilled air blanket temperature in degrees Fahrenheit at the coldest point on the vertical axis through the horizontal center of the vapor/air interface either shall be no greater than 30% of the initial boiling point of the solvent in degrees Fahrenheit or no greater than 40.0°F (4.4°C); or

**(ii)** A refrigerated condenser coil (in place of an unrefrigerated coil) having a minimum cooling capacity of 100% of the boiling-sump heat input rate and conforming to the air blanket temperature requirements pursuant to Section II(3)(F)(i); or

**(iii)** An ECS operated in accordance with Section IV of this Appendix.

**(G)** **Water Separator:** Water should not be visually detectable in the VOC containing solvent exiting the water separator.

**(4)** Sections II(1) and II(2) of this Appendix shall not apply, if a batch vapor cleaning machine meets all of the following:

**(A)** **Workloads:**

**(i)** A workload shall not occupy more than half of the cleaning machine's open-top area.

**(ii)** The workload shall not be so massive that the vapor level drops more than 4 inches (10 cm), when the workload is removed from the vapor zone.

**(iii)** The workload shall not be sprayed with cleaning-solvent above the vapor/air interface level.

**(B)** **Carry-Out:** Minimize cleaning-solvent carry-out by the following measures:

**(i)** Orient the items being cleaned in such a way that the items drain easily after cleaning.

**(ii)** Degrease the workload in the vapor zone at least 30 seconds or until condensation ceases.

**(iii)** For manual loading/unloading, tip out any pools of solvent on the cleaned parts before removal.

**(iv)** Allow parts to dry within the batch vapor cleaning machine until visually dry.

**(C)** **Startup And Shutdown:** The following sequence shall be used for startup and shutdown:

**(i)** When starting the batch vapor cleaning machine, the cooling system shall be turned on before, or simultaneously with, the sump heater.

**(ii)** When shutting down the batch vapor cleaning machine, the sump heater shall be turned off before, or simultaneously with, the cooling system.

**(D)** **Blasting:** Blasting in a batch vapor cleaning machine shall be done within a Sealed System or be controlled by an ECS.

**(E)** **Records:** An owner and/or operator operating a batch vapor cleaning machine shall keep records pursuant to Section 501 of this rule.

**III. IN-LINE VAPOR CLEANING MACHINES:**

**(1)** No person shall operate an in-line vapor cleaning machine, unless the machine meets National Emission Standards for Halogenated Solvent Cleaning (subpart T, Rule 370), as if the cleaning-solvent in use were subject to subpart T standards.

**(2)** No person shall operate an in-line vapor cleaning machine, unless the machine has a vapor/air interface Fahrenheit temperature no greater than 30% of the solvent's boiling point temperature or no greater than 40.0°F (4.4°C), whichever is lower.

**(3)** Sections III(1) and III(2) of this Appendix shall not apply, if an in-line vapor cleaning machine is equipped with all of the following:

**(A)** **Cover:** Within 10 minutes of turning off the solvent heating system, cover the entrance and exit and any opening greater than 16 square inches (104 $cm^2$).

**(B)** **Vapor Level Control System.**

**(C)** **Primary Condenser:** Have a primary condenser that maintains an exit temperature not exceeding 85°F (29°C).

**(D)** **Freeboard Ratio:** Have a freeboard ratio greater than or equal to 0.75.

**(E)** **Refrigeration Or ECS:** In-line vapor cleaning machines having any of the following descriptors shall comply with Sections III(3)(E)(i), III(3)(E)(ii), or III(3)(E)(iii) of this Appendix:

• an evaporative surface area equal to or greater than 10.75 $ft^2$ (1.0 $m^2$); or

• installed or subject to major modification after November 1, 1999, or

• having average monthly VOC emissions exceeding 31 pounds VOC per square foot of solvent surface area:

**(i)** A refrigerated freeboard chiller for which the chilled air blanket temperature in degrees Fahrenheit at the coldest point on the vertical axis through the horizontal center of the vapor/air interface either shall be no greater than 30% of the initial boiling point of the solvent in degrees Fahrenheit or no greater than 40.0°F (4.4°C); or

**(ii)** A refrigerated condenser coil (in place of an unrefrigerated coil) having a minimum cooling capacity of 100% of the boiling-sump heat input rate and conforming to the air blanket temperature requirements pursuant to Section III(3)(E)(i) of this Appendix; or

**(iii)** An ECS operated in accordance with Section IV of this Appendix.

**(F)** **Water Separator:** Water should not be visually detectable in the VOC-containing solvent exiting the water separator.

**(4)** Sections III(1) and III(2) of this Appendix shall not apply, if the in-line vapor cleaning machine meets all of the following:

**(A)** **Workloads:** Entrances and exits should silhouette workloads so that the average clearance between parts and the edge of the in-line vapor cleaning machine opening is either less than 4 inches (10 cm) or less than 10% of the width of the opening.

**(B)** **Carry-Out:** Equip the in-line vapor cleaning machine with either a drying tunnel or another means, such as a rotating basket, sufficient to prevent cleaned parts from carrying out cleaning-solvent liquid or vapor.

**(C)** **Startup And Shutdown:** The following sequences shall be used for startup and shutdown:

**(i)** When starting the in-line vapor cleaning machine, the cooling system shall be turned on before, or simultaneously with, the sump heater.

**(ii)** When shutting down the in-line vapor cleaning machine, the sump heater shall be turned off before, or simultaneously with, the cooling system.

**(D)** **Records:** An owner and/or operator operating an in-line vapor cleaning machine shall keep records pursuant to Section 501 of this rule.

## IV. EMISSION CONTROL SYSTEM REQUIREMENTS:

**(1)** An Emission Control System (ECS) used pursuant to this rule shall consist of a hood or enclosure to collect emissions, which are vented to a processing device. The overall control efficiency (capture plus processing) of the system shall not be less than 85%. The capture system shall have a ventilation rate no greater than 65 cfm per square foot of evaporative surface (20 $m^3$/min./$m^2$), unless that rate must be changed to meet a standard specified and certified by a Certified Safety Professional, a Certified Industrial Hygienist, or a licensed professional engineer experienced in ventilation-system design, that concerns health and safety requirements. The ECS shall be approved by the Control Officer.

**(2)** **Operation And Maintenance (O&M) Plan Required For ECS:** An owner and/or operator shall create and maintain an O&M Plan for any ECS required by this rule or pursuant to an air pollution control permit in accordance with Section 309 of this rule.

**(3)** **Recordkeeping:**

**(A)** **ECS Operation And Maintenance Records:** On each day that an ECS is used to comply with any provision of this rule, an owner and/or operator shall make a permanent record of the operating parameters of the key systems described in the O&M Plan. For each day or period in which the O&M Plan requires that maintenance be performed, a permanent record shall be made of the maintenance actions taken, within 24 hours of maintenance completion. An explanation shall be entered for scheduled maintenance that is not performed during the period designated in the O&M Plan.

**(B)** **Other Records Required When Complying Via ECS:** An owner and/or operator using an ECS pursuant to this rule shall maintain, in addition to the records required by Section 501.1 of this rule, daily documentation showing the VOC content of the solvent material and the amount added for makeup.

**(4)** **Test Methods For Determining Emission Control System Compliance:** Test methods and compliance procedures for an ECS are in Section 502 of this rule.

## REGULATION III - CONTROL OF AIR CONTAMINANTS

## RULE 333
## PETROLEUM SOLVENT DRY CLEANING

### INDEX


**SECTION 100 - GENERAL**

101 PURPOSE

102 APPLICABILITY

**SECTION 200 - DEFINITIONS**

201 CARTRIDGE FILTER

202 CONTAINERS AND CONVEYORS OF SOLVENT

203 DRY CLEANING

204 PERCEPTIBLE LEAKS

205 PETROLEUM SOLVENT

206 SOLVENT RECOVERY DRYER

~~207 VOLATILE ORGANIC COMPOUND (VOC)~~

**SECTION 300 - STANDARDS**

301 OPERATING REQUIREMENTS

302 CONTROLS REQUIRED - SOLVENT RECOVERY DRYER

**SECTION 400 - ADMINISTRATIVE REQUIREMENTS (NOT ~~INCLUDED~~APPLICABLE)**

**SECTION 500 - MONITORING AND RECORDS**

501 RECORDKEEPING AND REPORTING

502 COMPLIANCE DETERMINATION - TEST METHODS


**Revised 07/13/88**

**Revised 06/22/92**

**Revised 06/19/96**

**Revised 09/25/13**

**MARICOPA COUNTY**

**AIR POLLUTION CONTROL REGULATIONS**

**REGULATION III - CONTROL OF AIR CONTAMINANTS**

**RULE 333**

**PETROLEUM SOLVENT DRY CLEANING**

**SECTION 100 – GENERAL**

**101** **PURPOSE:** To limit the emissions of volatile organic compounds from petroleum solvents used in dry cleaning.

**102** **APPLICABILITY:** This rule applies to petroleum solvent washers, dryers, solvent filters, settling tanks, vacuum stills, and other containers and conveyors of petroleum solvent that are used in petroleum solvent dry cleaning facilities.

**SECTION 200 - DEFINITIONS:** For the purpose of this rule, the following definitions shall apply~~:~~, in addition to those definitions found in Rule 100 (General Provisions and Definitions) of these rules. In the event of any inconsistency between any of the Maricopa County air pollution control rules, the definitions in this rule take precedence.

**201** **CARTRIDGE FILTER -** Any perforated canister containing filtration paper, fabric and/or activated carbon that is used in a pressurized system to remove solid particles and fugitive dyes from soil-laden solvent.

**202** **CONTAINERS AND CONVEYORS OF SOLVENT -** Any piping, ductwork, pumps, storage tanks, and other ancillary equipment that are associated with the installation and operation of washers, dryers, filters, stills and settling tanks.

**203** **DRY CLEANING -** A process for the cleaning of textiles and fabric products in which articles are washed in nonaqueous solvent and then dried by exposure to a heated air stream.

**204** **PERCEPTIBLE LEAKS -** Any petroleum solvent vapor, mist, or liquid leaks that are conspicuous from visual observation, such as pools or droplets of liquid, or buckets or barrels of solvent or solvent-laden waste standing open to the atmosphere.

**205** **PETROLEUM SOLVENT -** Volatile organic compounds commonly produced by petroleum distillation, primarily comprising a hydrocarbon range of 8 to 12 carbon atoms per organic molecule.

**206** **SOLVENT RECOVERY DRYER -** A class of dry cleaning dryers that employs a condenser to liquefy and recover solvent vapors evaporating in a closed-loop, recirculating stream of heated air.

~~**207** **VOLATILE ORGANIC COMPOUND (VOC)** - Any organic compound, excluding the following organic compounds which have been designated by the EPA as having negligible photochemical reactivity: methane; ethane; methylene chloride (dichloromethane); 1,1,1-trichloroethane; trichlorofluoromethane (CFC-11); dichlorodifluoromethane (CFC-12); chlorodifluoromethane (CFC-22); 1,1,2-trichlorotrifluoroethane (CFC-113); 1,2-dichlorotetrafluoroethane (CFC-114); chloropentafluoroethane (CFC-115); trifluoromethane (FC-23); 2,2-dichloro-1,1,1-trifluoroethane (HCFC-123); 2-chloro-1,1,1,2-tetrafluoroethane (HCFC-124); 1,1-dichloro-1-fluoroethane (HCFC-141b); 1-chloro-1,1-difluoroethane (HCFC-142b); pentafluoroethane (HFC-125); 1,1,2,2-tetrafluoroethane (HFC-134); 1,1,1,2-tetrafluoroethane (HFC-134a); 1,1,1-trifluoroethane (HFC-143a); 1,1-difluoroethane (HFC-152a); all completely fluorinated, completely saturated: alkanes, ethers and tertiary amines.~~

## SECTION 300 – STANDARDS

**301** **OPERATING REQUIREMENTS -** A person shall not operate any petroleum solvent dry cleaning facility unless all of the following requirements are satisfied:

**301.1** **Liquid and Vapor Leaks:** Dry cleaning equipment shall not be operated with perceptible leaks from any portion of the equipment, including but not limited to: hose connections, unions, couplings and valves; machine door gaskets and seating; filter head gaskets and seating; pumps; base tanks and storage containers; water separators; filter sludge recovery; distillation units; divertor valves; solvent-moistened lint from lint basket; and cartridge filters.

**301.2** **Solvent Storage:** Solvents shall be stored in closed containers.

**301.3** **Access Vents:** All washer and dryer traps, access doors, and any other parts of equipment where solvent may be exposed to the atmosphere, shall be kept closed at all times except when required for proper operation or maintenance.

**301.4** **Solvent Filtration:** Any petroleum filtration system shall be installed and operated to comply with at least one of the following:

**a.** Reduce the volatile organic compounds in all filtration wastes to 2.2 lbs. (1 kg) or less per 220 lbs. (100 kg) dry weight of articles cleaned, before disposal, and exposure to the atmosphere; or

**b.** Install and operate a cartridge filtration system, and drain the filter cartridges in their sealed housings for eight hours or more before their removal; or

**c.** Place all discarded filtration material, including cartridges and particulate filter media, immediately in sealed containers and dispose of according to hazardous waste statutes.

**302** **CONTROLS REQUIRED - SOLVENT RECOVERY DRYER:** Petroleum solvent dry cleaning facilities installed after July 13, 1988, shall have a solvent recovery that recovers at least 85 percent of petroleum solvent by weight. In addition, the recovery cycle for the dryer shall not be terminated until the petroleum solvent flow rate from the water separator is 15 milliliters or less per minute.

**SECTION 400 - ADMINISTRATIVE REQUIREMENTS (NOT APPLICABLE)**

**SECTION 500 - MONITORING AND RECORDS**

**501** **RECORDKEEPING AND REPORTING:** Any person subject to this rule shall comply with the following requirements. Records shall be retained for five years and shall be made available to the Control Officer upon request.

**501.1** **Current List:** Maintain a current list of solvents and any other VOC containing materials; state the VOC content of each in pounds per gallons or grams per liter.

**501.2** **Usage Records and Amount of Clothes Cleaned:** Maintain monthly records of the weight of clothing cleaned, the amount of solvent used, and the weight and type of any material disposed of which contains any quantity of cleaning solvent. The name of the company receiving such material shall also be recorded.

**502** **COMPLIANCE DETERMINATION - TEST METHODS:** When more than one test method is permitted for a determination, an exceedance of the limits established in the rule determined by any of the applicable test methods constitutes a violation of this rule.

**502.1** Measurements of petroleum-based VOC emissions pursuant to provisions of this rule shall be conducted in accordance with EPA Test Method 25 or its applicable submethod(s) (40 CFR 60, Appendix A). Alternatively, a person may meet the efficiency

(85 percent) requirement of Section 302 if 6.6 lbs. (3 kg) or less of petroleum solvent is emitted per 220 lbs. (100 kg) dry weight of articles cleaned, subject to prior approval of the test protocol by the Control Officer.

**502.2** Measurements of VOC content of solvents, waste, recovered or recycled material shall be conducted and reported in accordance with ASTM Standard Recommended Practices for General Gas Chromatography Procedures, E 260-85 or ASTM General Techniques For Infrared Quantitative Analysis, E 160A-67 or ASTM General Techniques of Ultraviolet Quantitative Analysis, ASTM E 169-63; as approved by the Control Officer.

**502.3** Efficiency of the control device shall be determined according to EPA Method 18.

**502.4** Ventilation/draft rate shall be determined by EPA Methods 2, 2A, 2C and 2D.

## REGULATION III - CONTROL OF AIR CONTAMINANTS

## RULE 334
## RUBBER SPORTS BALL MANUFACTURING

### INDEX


**SECTION 100 – GENERAL**

101 PURPOSE

102 APPLICABILITY

**SECTION 200 – DEFINITIONS**

201 ADHESIVE

202 APPROVED EMISSION CONTROL SYSTEM

203 DAY

~~204 NON-PRECURSOR ORGANIC COMPOUND~~

~~205~~ 204 PRODUCTION DAY

~~206~~ 205 RUBBER SPORTS BALL

~~207~~ 206 VAPOR PROCESSING DEVICE

~~208 VOLATILE ORGANIC COMPOUND (VOC)~~

**SECTION 300 – STANDARDS**

301 LIMITATION - ADHESIVES

302 OPERATION AND MAINTENANCE (O&M) PLAN

303 MAINTENANCE

304 STORAGE AND DISPOSAL OF VOC

305 EXEMPTIONS

**SECTION 400 - ADMINISTRATIVE REQUIREMENTS**

401 COMPLIANCE SCHEDULE

**SECTION 500 - MONITORING AND RECORDS**

501 PROVIDING AND MAINTAINING MONITORING DEVICES

502 RECORDKEEPING AND REPORTING

503 COMPLIANCE DETERMINATION - TEST METHODS

**Adopted 08/02/93**

**Revised 09/20/94**

**Revised 06/19/96**

**Revised 09/25/13**

**MARICOPA COUNTY**

**AIR POLLUTION CONTROL REGULATIONS**

**REGULATION III - CONTROL OF AIR CONTAMINANTS**

**RULE 334**

**RUBBER SPORTS BALL MANUFACTURING**

**SECTION 100 – GENERAL**

**101** **PURPOSE:** To limit emission of volatile organic compounds (VOCs) from natural and synthetic rubber adhesives used in the manufacture of non-inflatable rubber balls.

**102** **APPLICABILITY:** This rule applies to any rubber sports-ball manufacturing facility with an aggregate emission to atmosphere after December 31, 1989, of 50.0 tons (45.35 Mg) or more of VOC in any year or 8333 pounds (3780 kg) or more of VOC in any month, emitted from handling, using and/or preparing rubber adhesives or their constituents.

**SECTION 200 - DEFINITIONS:** For the purpose of this rule, the following definitions shall apply~~:~~, in addition to those definitions found in Rule 100 (General Provisions and Definitions) of these rules. In the event of any inconsistency between any of the Maricopa County air pollution control rules, the definitions in this rule take precedence.

**201** **ADHESIVE -** An initially fluid material used to fasten or bond two surfaces together by using the intermolecular forces between adhesive and the bonded surface(s) as a principal mechanism effecting the bonding.

**202** **APPROVED EMISSION CONTROL SYSTEM -** A system for reducing emissions of organic compounds, consisting of collection and control devices which are approved in writing by the Control Officer and are designed and operated in accordance with good engineering practice.

**203** **DAY -** A period of 24 consecutive hours beginning at midnight.

~~**204** **NON-PRECURSOR ORGANIC COMPOUND** - Any of the following organic compounds which have been designated by the EPA as having negligible photochemical reactivity: methane; ethane; methylene chloride (dichloromethane); 1,1,1−trichloroethane; trichlorofluoromethane (CFC−11); dichlorodifluoromethane (CFC−12); chlorodifluoromethane (CFC−22); 1,1,2−trichlorotrifluoroethane (CFC−113); 1,2−dichlorotetrafluoroethane (CFC−114); chloropentafluoroethane (CFC−115); trifluoromethane (FC−23); 2,2−dichloro-1,1,1−trifluoroethane (HCFC−123); 2−chloro-1,1,1,2−tetrafluoroethane (HCFC−124); 1,1−dichloro-1−fluoroethane (HCFC−141b); 1−chloro-1,1−difluoroethane (HCFC−142b); pentafluoroethane (HFC−125); 1,1,2,2−tetrafluoroethane (HFC−134); 1,1,1,2−tetrafluoroethane (HFC−134a); 1,1,1−trifluoroethane (HFC−143a); 1,1−difluoroethane (HFC−152a); all completely fluorinated, completely saturated: alkanes, ethers and tertiary amines; sulfur-containing perfluorocarbons with no unsaturations, no hydrogen, and with sulfur bonds only to carbon and fluorine.~~

~~**205**~~**204** **PRODUCTION DAY -** Any day in which the total adhesive pumped into any and all adhesive application machines exceeds 100 gallons (379 liters).

~~**206**~~**205** **RUBBER SPORTS BALL -** A hollow ball having natural and/or synthetic rubber as a principal ingredient, having no pressure adjustment valve, and intended for sports in which it is hit.

~~**207**~~**206** **VAPOR PROCESSING DEVICE -** The portion of a VOC emission control system that recovers, destroys, or otherwise physically or chemically handles VOC vapor, delivered to it by a capture system, so that most or all of that VOC cannot be emitted to the atmosphere.

~~**208** **VOLATILE ORGANIC COMPOUND (VOC)** - Any organic compound except non-precursor organic compounds.~~

**SECTION 300 – STANDARDS**

**301** **LIMITATION - ADHESIVES:** By May 31, 1995, no person shall use adhesives in the manufacture of rubber sports balls, including but not limited to tennis and racquet balls, except by:

**301.1** Using adhesive with a VOC content that does not exceed 2.4 pounds of VOC per gallon (288 g/l) as applied, less water and non-precursor compounds, as determined by EPA Method 24; or

**301.2** Using an Approved Emission Control System having an overall control efficiency, including capture and processing, of at least 81 percent by weight of VOC-reduction for all adhesive application processes using adhesive containing over 2.4 pounds of VOC per gallon (288 g/l), as applied, less water and non-precursor compounds. The control efficiency of an adsorption and recovery system used as an Approved Emission Control System shall be determined using the mass-balance formula in subsection 503.1.

**302 OPERATION AND MAINTENANCE (O&M) PLAN:**

**302.1** The owner or operator of an Approved Emission Control System used to meet the requirements of subsection 301.2 of this rule shall provide the Control Officer with an Operation and Maintenance (O&M) Plan. This O&M Plan shall specify:

**a.** Key system operating parameters, such as temperatures, pressures, fluid throughputs, and/or flow rates; the stack VOC-concentration monitoring and adsorber sequencing equipment specifications and the set points contained in their programming; and any other critical processes necessary for proper operation and for determining compliance with this rule;

**b.** All essential maintenance procedures and their frequencies needed to maintain the Approved Emission Control System.

**302.2** An Approved Emission Control System must have the O&M Plan approved in writing by the Control Officer.

**302.3 Time Frames For Changes:**

**a.** Changes involving reduction in the frequency or extent of a Control-Officer approved O&M Procedure must have the written consent of the Control Officer prior to being implemented.

**b.** **Other changes:** An updated O&M Plan must be submitted to the Control Officer for review within 10 days of any changes not involving reduction in frequency or extent of an approved O&M procedure. Within five working days of a written disapproval of such changes, either the original O&M Plan shall be reinstituted or an alternative,

negotiated with the affected facility and approved in writing by the Control Officer, shall be instituted.

**303** **MAINTENANCE:** Any person subject to this rule shall operate and maintain in proper working order when in use all process equipment in which VOC-containing materials are used.

**304** **STORAGE AND DISPOSAL OF VOC:** Any person subject to this rule shall store all VOC-containing materials subject to evaporation, including waste adhesive and waste solvent in containers, each of which is legibly labeled with its contents. The presence of content-labels that are required by federal hazardous waste or occupational safety statutes (RCRA or OSHA) will meet this requirement. These containers shall be covered when not in use or, alternatively, they shall be placed beneath a hood ducted to or within an enclosure ducted to an operating Approved Emission Control System until solidified throughout. Such person shall keep records of disposal of VOC-containing materials in accordance with applicable federal, state, and local hazardous waste disposal statutes and rules.

**305** **EXEMPTIONS:**

**305.1** Facilities which after December 31, 1989, always emit less than 50 tons (45.4 Mg) per year and less than 8333 pounds (3780 kg) per month of VOC from adhesives used in the manufacture of rubber sportsballs are exempt from this rule, except that those facilities which have the potential to annually emit or which do annually emit more than 25 tons (22.7 Mg) of VOC from such adhesives after December 31, 1989, must keep records in accordance with Section 500.

**305.2** **Applicability of Other Rules:**

**a.** Facilities exempted from the provisions of this rule pursuant to Section 102 are not exempted from other provisions in other rules of the Maricopa County Air Pollution Control Regulation III.

**b.** Rules 330 and 336 shall not apply to a facility subject to the standards of this rule.

## SECTION 400 - ADMINISTRATIVE REQUIREMENTS

**401** **COMPLIANCE SCHEDULE:** An owner or operator who chooses to meet the requirements of Section 301 by use of an Approved Emission Control System must be in full compliance with all applicable requirements by May 31, 1995. Any owner or operator of an emission control system used to meet the requirements of subsection 301.2 of this rule shall provide the Control Officer with:

**401.1** An Operation and Maintenance (O&M) Plan for this system by May 31, 1995.

**401.2** A compliance plan by December 1, 1994, listing the dates of completion of increments of progress toward meeting the requirements of subsection 301.2.

## SECTION 500 - MONITORING AND RECORDS

**501** **PROVIDING AND MAINTAINING MONITORING DEVICES:** Any person operating an Approved Emission Control System pursuant to this rule shall provide, properly install and maintain in calibration, in good working order and in operation, devices described in an approved O&M Plan for indicating temperatures, pressures, fluid throughputs, rates of flow, and/or other operating conditions necessary to determine if air pollution control equipment is functioning properly and is properly maintained.

**502** **RECORDKEEPING AND REPORTING:** Any person subject to this rule shall comply with the following requirements. Records shall be retained for five years and shall be made available to the Control Officer upon request.

**502.1** **Current List:** Maintain a current list of adhesives including their formulations as applied, makeup solvents, and any other VOC-containing materials. State the VOC content of each in pounds per gallon or grams per liter.

**502.2** **Usage Records:** Maintain records according to the following schedule, which show the type and amount of each adhesive, makeup solvent, and any other VOC-containing material.

**a**. **Adhesives solvents, and VOC-containing materials**:

**(1)** Records shall be updated monthly showing the usage of the separate adhesives, solvents, and other VOC-containing materials.

**(2)** Yearly update those materials known to be annually used in quantities less than 15 gallons (56 l) or to annually emit less than 75 lb (34 kg).

**(3)** **Deliveries:** At the time of each delivery of solvent, the amount received, tank designation and time shall be recorded in a log book.

**b.** **Measuring instruments and readings:**

**(1)** Readings for efficiency determination should be made during the same time period each day.

**(2)** If volume rather than mass (weight) measures are used as the basis for calculations, then compensate for temperature. A temperature compensating instrument may be used for this purpose. If two or more such instruments are used in a demonstration of compliance with this rule, log any difference(s) between their respective compensating factors with the temperature range(s) where difference occurs. Show adjustments for such differences when making mass-balance calculations.

**(3)** Readings of all meters or other instruments measuring throughput on lines to or from such tanks shall be recorded daily with date and time.

**(4)** Each repair, adjustment, or resetting of flow meters or other instruments measuring cumulative throughput shall be logged with the date, time, purpose, and the reading before and after such an operation. The cumulative, totalizing, throughput readout of such an instrument shall have no resetting feature.

**503 COMPLIANCE DETERMINATION - TEST METHODS:** When more than one test method is permitted for a determination, an exceedance of the limits established in this rule determined by any of the applicable test methods constitutes a violation of this rule.

**503.1 Mass Balance Determinations - Self Monitoring of Compliance for a Facility Using Carbon Adsorption with Solvent Recovery as a Control Method:**

**a. Daily recording:** Refer to Figure I of this rule for the location of the mass balance meters - MB, MV, and MR. By midday on the first workday following a completed production-day, the following shall be determined for that completed production day and entered in a hardcopy form acceptable to the Control Officer:

**(1)** The individual readings given by each of the three mass balance meters at the designated meter-reading time during the production day just completed;

**(2)** VOC throughputs via those three mass balance flow meters since both:

**(a)** the previous production day at the designated meter-reading time; and

**(b)** since meter-reading time on that production day which is nine production days prior to the most recently completed production day.

**(3)** Using the Recovery Formula in 503.1,b. and the logged values required by 503.1,a.(2)(a) above, determine the most recent one day recovery efficiency and

record that in the same log. Using the values required by 503.1,a.(2)(b) in the previous paragraph, the 9-day rolling average shall also be calculated and recorded using the same recovery formula in 503.1,b.

**b. Recovery formula:** Using the liquid/liquid mass balance method, the following ratio expresses the efficiency of the control system during the period of the 9-day rolling average and for other periods:

$$Recovery_M = \frac{M_B}{M_V + M_R}$$

Where: $M_B$ is the solvent throughput indicated by the meter immediately downstream of the buffer tank.334.9

$M_V$ is the solvent throughput indicated by the meter on the output pipe of the virgin solvent tank.

$M_R$ is the solvent throughput indicated by the meter downstream of the junction connecting the output lines from each recovered-solvent storage tank.

**(1) Adjustments for waste disposed of through statutorily prescribed procedures:** When the combined mass of all such waste is less than 0.5 percent of the total mass of solvent metered through meters MV and MR during the same 9-day rolling average period as the waste occurred, 95 percent of the mass of contaminated solvent and half the mass of any still fluid adhesive wasted may be subtracted from the denominator (MV + MR) in the recovery formula when determining efficiency. Except as allowed by the procedure set forth in the next paragraph, no adjustment credit will be given for waste adhesive which is no longer fluid. A Method 24 Test determination of VOC content(s) referenced in subsection 503.2 shall be performed if the owner or operator of an affected facility requests adjustment for a larger quantity of fluid and/or non-fluid waste(s). The request for adjustment and the results of the test shall be submitted to the Control Officer for approval.

**(2) Total shut-downs and start-ups:** The production statistics for the last production day prior to a complete production shutdown of at least five consecutive days shall not be included in the 9-day rolling average of control efficiency, as long as no adhesive is made on the last production day. At a start-up after a total shutdown "day one" of a 9-day rolling average period begins at the standard meter reading time on the third production day since start-up.

**(3) Non-production days:** On days during which a total of 100 gallons or less of adhesive enters adhesive application machines, the readings of meters "Ms", "MV", and "MR" shall not be entered in the same log-sector as such readings made during actual production days, irrespective of whether adhesive was made on such days.

**503.2** The method of determining both the solids and the volatile content of adhesives, and of determining compliance of an adhesive with the VOC-limit specified in subsection 301.1 shall be the EPA Reference Method 24 (40 CFR, Part 60, Appendix A). Method 24 shall also be used to determine the volatile and nonvolatile content of waste adhesive with reference to subsection 503.1,b.(1).

FIGURE 1
SCHEMATIC FOR SHOWING THE LOCATION OF METERS FOR MASS BALANCE DETERMINATION

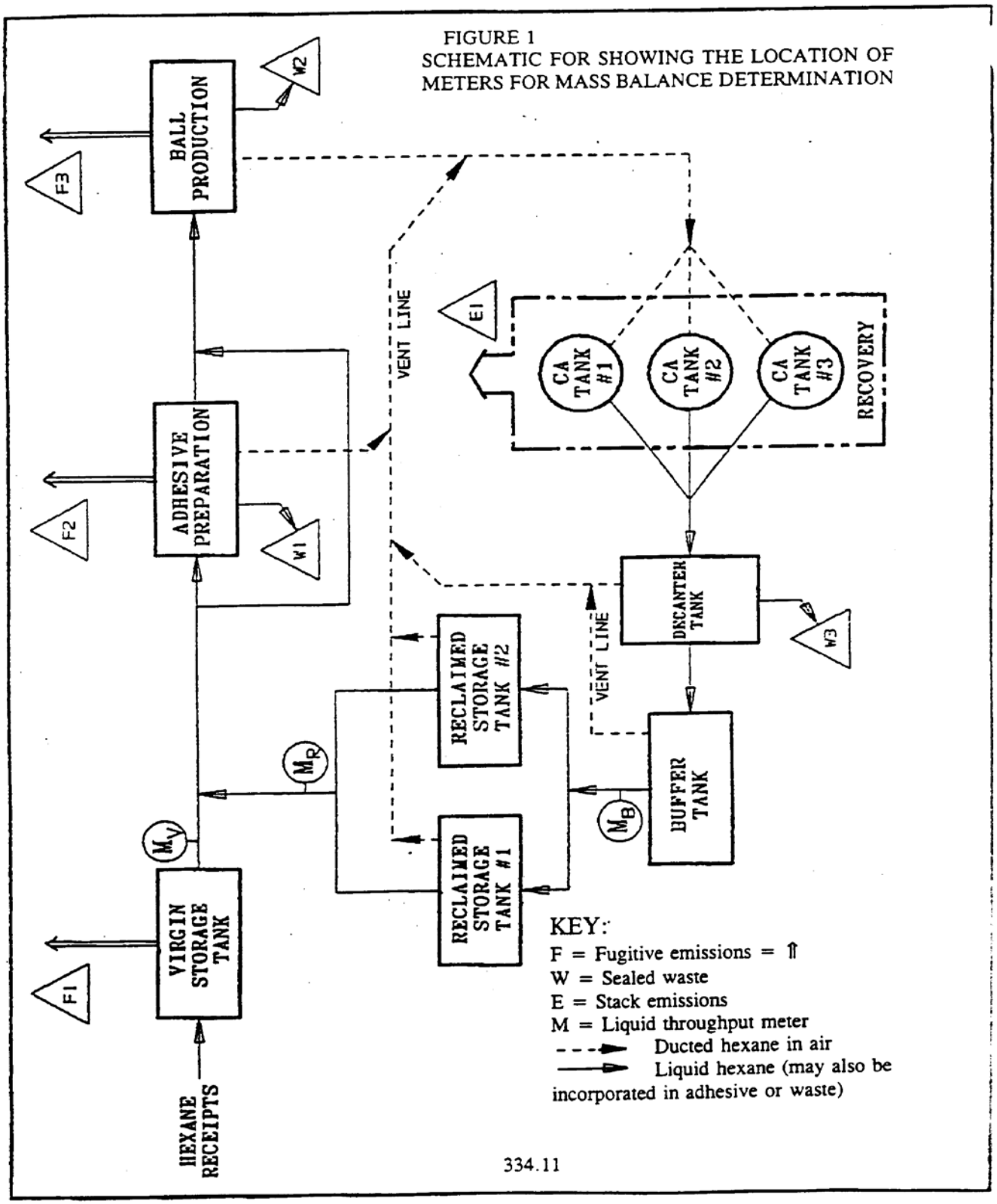


**REGULATION III - CONTROL OF AIR CONTAMINANTS**

**RULE 335**

**ARCHITECTURAL COATINGS**

**INDEX**

**SECTION 100 – GENERAL**

101 PURPOSE

102 APPLICABILITY OF MULTIPLE STANDARDS

**SECTION 200 – DEFINITIONS**

201 ACRYLIC POLYMERS

202 ALKYDS

203 ARCHITECTURAL COATING

204 GROUND WOOD PRESERVATIVES

205 BITUMINOUS COATING MATERIALS

206 BOND BREAKERS

207 CATALYZED EPOXY

208 CONCRETE CURING COMPOUNDS

209 CHLORINATED RUBBER

210 DRY FOG COATINGS

211 ENAMEL UNDERCOATERS

212 FIRE RETARDANT COATINGS

213 FLAT COATINGS

214 GENERAL PRIMERS

215 GENERAL SEALERS

216 GENERAL UNDERCOATERS

217 GRAPHIC ARTS COATINGS (SIGN PAINTS)

218 INDUSTRIAL MAINTENANCE PRIMERS

219 INDUSTRIAL MAINTENANCE TOPCOATS

220 INORGANIC POLYMERS

221 LACQUERS

222 MASTIC TEXTURE COATINGS

223 METALLIC PIGMENTED PAINTS

224 MULTI-COLORED COATINGS

225 NON-FLAT COATINGS

~~226 NON-PRECURSOR ORGANIC COMPOUND~~

~~227~~ 226 OPAQUE STAINS

~~228~~ 227 OPAQUE WOOD PRESERVATIVES

~~229~~ 228 ORGANIC COMPOUND

~~230~~ 229 QUICK-DRY ENAMELS

~~231~~ 230 QUICK-DRY PRIMERS AND SEALERS

~~232~~ 231 ROOF COATINGS

~~233~~ 232 SEMI-TRANSPARENT STAINS

~~234~~ 233 SEMI-TRANSPARENT WOOD PRESERVATIVES

~~235~~ 234 SHELLACS

~~236~~ 235 SILICONES

~~237~~ 236 SPECIALTY FLAT PRODUCTS

~~238~~ 237 SPECIALTY PRIMERS, SEALERS, AND UNDERCOATERS

~~239~~ 238 SWIMMING POOL COATINGS

~~240~~ 239 TILE-LIKE GLAZE COATINGS

~~241~~ 240 TRAFFIC COATINGS

~~242~~ 241 UNIQUE VEHICLES

~~243~~ 242 URETHANE POLYMERS

~~244~~ 243 VARNISHES

~~245~~ 244 VINYL CHLORIDE POLYMERS

~~246 VOLATILE ORGANIC COMPOUND (VOC)~~

~~247~~ 245 WATERPROOF MASTIC COATINGS

~~248~~ 246 WATERPROOF SEALERS

**SECTION 300 – STANDARDS**

301 PROHIBITION - BITUMINOUS PAVEMENT SEALERS

302 INTERIM LIMITS - NON-FLAT ARCHITECTURAL COATINGS

303 FINAL LIMITS - NON-FLAT ARCHITECTURAL COATINGS

304 LIMITS - FLAT ARCHITECTURAL COATINGS

305 LIMITS - SPECIALTY COATINGS

306 EXEMPTIONS - SPECIFIC-USE COATINGS

307 EXEMPTIONS - SMALL CONTAINERS

**SECTION 400 - ADMINISTRATIVE REQUIREMENTS**

401 LABELING REQUIRED

402 MANUFACTURE DATE REQUIRED

**SECTION 500 - MONITORING AND RECORDS**

501 DETERMINATION OF COMPLIANCE

**Adopted 07/13/88**

**Revised 09/25/13**

**MARICOPA COUNTY**
**AIR POLLUTION CONTROL REGULATIONS**

**REGULATION III - CONTROL OF AIR CONTAMINANTS**

**RULE 335**
**ARCHITECTURAL COATINGS**

**SECTION 100 – GENERAL**

**101** **PURPOSE:** To limit the emission of volatile organic compounds from architectural coatings.

**102** **APPLICABILITY OF MULTIPLE STANDARDS:** In any instance where more than one of the standards set forth in this rule may be applicable, the most restrictive standard shall apply.

**SECTION 200 - DEFINITIONS:** For the purpose of this rule, the following definitions shall apply~~:~~, in addition to those definitions found in Rule 100 (General Provisions and Definitions) of these rules. In the event of any inconsistency between any of the Maricopa County air pollution control rules, the definitions in this rule take precedence.

**201** **ACRYLIC POLYMERS -** Polymers resulting from the polymerization of derivatives of acrylic acids, including esters of acrylic acids, methacrylic acid, acrylonitrile, and their copolymers. Also known as acrylic resins and acrylate resins.

**202** **ALKYDS -** Synthetic resins formed by the condensation of polyhydric alcohols with polybasic acids.

**203** **ARCHITECTURAL COATING -** Any coating applied to stationary structures and their appurtenances, to mobile homes, to pavements or to curbs.

**204** **BELOW GROUND WOOD PRESERVATIVES -** Heavy duty coatings formulated solely for the purpose of protecting below ground wood from decay or insect attack and which contain a wood preservative.

**205** **BITUMINOUS COATING MATERIALS -** Black or brownish materials, soluble in carbon disulfide, consisting mainly of hydrocarbons and which are obtained from natural deposits, or as residues from the distillation of crude petroleum oils or of low grades of coal.

**206** **BOND BREAKERS -** Coatings whose sole purpose, when applied between layers of concrete, is to prevent the freshly poured top layer of concrete from bonding to the substrate on which it is poured.

**207** **CATALYZED EPOXY -** Crosslinking resins made by the reaction of epoxides with other material such as amines, alcohols, phenols, carboxylic acids and unsaturated compounds.

**208** **CONCRETE CURING COMPOUNDS -** Coatings whose sole purpose is to retard the evaporation of water from the surface of freshly cast concrete, thereby strengthening it.

**209** **CHLORINATED RUBBER -** Resin formed by the reaction of rubber with chlorine.

**210** **DRY FOG COATINGS -** Coatings which are formulated so that when sprayed, overspray droplets dry before falling on floors and other surfaces.

**211** **ENAMEL UNDERCOATERS -** Coatings which are designed to be applied to a new surface over a primer or over a previous coat of paint, in order to improve the seal, provide better adhesion and make a smooth base for non-flat coatings.

**212** **FIRE RETARDANT COATINGS -** Coatings which are designed to retard fires and which will significantly:

**212.1** Reduce the rate of flame spread on the surface of a material to which such a coating has been applied; or

**212.2** Resist ignition when exposed to high temperature; or

**212.3** Insulate a substrate to which such a coating has been applied and prolong the time required for the substrate to reach ignition temperature.

**213** **FLAT COATINGS -** Coatings which register gloss less than 15 on an 85° meter or less than 5 on a 60° meter, or which is labeled as a flat coating.

**214** **GENERAL PRIMERS -** Coatings which are intended to be applied to a surface to provide a firm bond between the substrate and subsequent coats.

**215** **GENERAL SEALERS -** Coatings which are intended for use on porous substrates to protect the substrate, to prevent subsequent coatings from being absorbed by the substrate, or to prevent harm to subsequent coatings by materials in the substrate.

**216** **GENERAL UNDERCOATERS -** Coating which are designed to provide a smooth surface for subsequent coats.

**217** **GRAPHIC ARTS COATINGS (SIGN PAINTS) -** Coatings which are marketed solely for application to indoor and outdoor signs and include lettering enamels, poster colors and bulletin colors.

**218** **INDUSTRIAL MAINTENANCE PRIMERS -** Coatings which are intended to be applied to a surface prior to the application of an industrial maintenance topcoat, to provide a firm bond between the substrate and subsequent coats.

**219** **INDUSTRIAL MAINTENANCE TOPCOATS -** High performance coatings which are formulated for the purpose of heavy abrasion, water immersion, chemical, corrosion, temperature, electrical or solvent resistance.

**220** **INORGANIC POLYMERS -** Substances whose principle structural features are made of homopolar interlinkages between multivalent elements other than carbon. This does not preclude the presence of carbon-containing groups in the side branches, or as interlinkages between principle structural members. Examples of such polymers are ethyl and butyl silicates.

**221** **LACQUERS -** Clear or pigmented coatings formulated with nitrocellulose or synthetic resins to dry by evaporation without chemical reaction and to provide a quick drying, solid protective film.

**222** **MASTIC TEXTURE COATINGS -** Coatings, except weatherproof mastic coatings, which are formulated to cover holes, minor cracks and to conceal surface irregularities.

**223** **METALLIC PIGMENTED PAINTS -** Any coatings which are formulated with metallic pigment and which contain more than 10 grams of metal particles per liter of coating (0.08 lb/gal) as applied where such metal particles are visible in the dried film.

**224** **MULTI-COLORED COATINGS -** Coatings which exhibit more than one color when applied and which are packaged in a single container and applied in a single coat.

**225** **NON-FLAT COATINGS -** Coatings which register gloss of 15 or greater on an 85° meter or 5 or greater on a 60° meter, or which are identified on the label as gloss, semi-gloss, or eggshell enamel coatings.

~~**Note1**[1]~~ ~~**226**~~ ~~**NON-PRECURSOR ORGANIC COMPOUND** - The following organic compounds have been designated by the EPA as having negligible photochemical reactivity: methane; ethane; methylene chloride; l,l,1 trichloroethane; trichlorotrifluoroethane (CFC-113); trichlorofluoromethane (CFC-~~

[1] ~~1 This note is not part of Rule 335. For the reader's convenience, the current list of non-precursor organic compounds is found in Rule 100, Section 200.~~

~~11); dichlorodifluoromethane (CFC-12); chlorodifluoromethane (CFC-22); trifluoromethane (FC-23); dichlorotetrafluoroethane (CFC-114) and chloropentafluoroethane (CFC-115).~~

~~227~~226 **OPAQUE STAINS -** All stains that are not classified as semitransparent stains.

~~228~~227 **OPAQUE WOOD PRESERVATIVES -** All wood preservatives that are not classified as semitransparent wood preservatives.

~~229~~228 **ORGANIC COMPOUND -** Any compound of carbon excluding carbon monoxide, carbon dioxide, carbonic acid, metallic carbides and carbonates and ammonium carbonate.

~~230~~229 **QUICK-DRY ENAMELS -** Non-flat coatings which comply with the following:

~~230.1~~229.1 Should be capable of being applied directly from the container by brush or roller when the ambient temperature is between 60°F and 80°F.

~~230.2~~ 229.2 When tested in accordance with ASTM D1640 they shall: set to touch in two hours or less, dry hard in eight hours or less, and be tack-free in four hours or less by the mechanical method test.

~~230.3~~ 229.3 Shall have a 60° meter dried film gloss of no less than 70.

~~231~~230 **QUICK-DRY PRIMERS AND SEALERS -** Primers, sealers and undercoaters which are intended to be applied to a surface to provide a firm bond between the substrate and subsequent coats and which are dry to the touch in one-half hour and can be recoated in two hours (ASTM 1640).

~~232~~231 **ROOF COATINGS -** Coatings which are formulated for the sole purpose of preventing penetration of the substrate by water. These coatings include bituminous roof and waterproof mastic coatings.

~~233~~232 **SEMI-TRANSPARENT STAINS -** Coatings which are formulated to change the color of a surface but not conceal the surface.

~~234~~233 **SEMI-TRANSPARENT WOOD PRESERVATIVES -** Wood preservative stains which are formulated for the purpose of protecting exposed wood from decay or insect attack by the addition of a wood preservative chemical and which change the color of a surface but do not conceal the surface. These coatings perform their function by penetrating into the wood.

~~235~~234 **SHELLACS -** Clear or pigmented coatings formulated with natural resins (except nitrocellulose resins), thinned with alcohol, formulated to dry by evaporation without a chemical reaction and intended to provide stain blocking properties as well as a solid protective film.

~~236~~235 **SILICONES -** A resin containing silicon unlike organic resins, which all contain carbon. The basic structure of silicones consist of silicon-oxygen linkages.

~~237~~236 **SPECIALTY FLAT PRODUCTS -** Self-priming flat products used only to perform one of the following functions: repair fire, smoke or water damage; neutralize odors; block stains; or coat acoustical materials without affecting their acoustical abilities.

~~238~~237 **SPECIALTY PRIMERS, SEALERS, AND UNDERCOATERS -** Primers, sealers and undercoaters used only to perform one of the following functions: repair fire, smoke or water damage; neutralize odors; block stains; block efflorescence; condition chalky surfaces; or coat acoustical materials without affecting their acoustical abilities.

~~239~~238 **SWIMMING POOL COATINGS -** Coatings specifically formulated to coat the interior of swimming pools and resist swimming pool chemicals.

~~240~~239 **TILE-LIKE GLAZE COATINGS -** Coatings which are formulated to provide a tough, extra-durable coating system, which are applied as a continuous (seamless) highbuild film and which cure to a hard glaze finish.

~~241~~240 **TRAFFIC COATINGS -** Coatings which are formulated to be applied to public streets, highways, and other surfaces including, but not limited to curbs, berms, driveways, and parking lots.

~~242~~241 **UNIQUE VEHICLES -** Generic polymer components not defined by any of the coatings listed in the category of industrial primers and topcoats in Section 305 of this rule, e.g., hypalon, phenoxy.

~~243~~242 **URETHANE POLYMERS -** Coating vehicles containing a polyisocyanatemonomer reacted in such a manner as to yield polymers containing any ratio, proportion, or combination of urethane linkages, active isocyanate groups, or polyisocyanate monomer.

~~244~~243 **VARNISHES -** Clear or pigmented coatings formulated with various resins to dry by chemical reaction or exposure to air. These coatings are intended to provide a durable, transparent or translucent, solid protective film.

~~245~~244 **VINYL CHLORIDE POLYMERS -** Polymers made by the polymerization of vinyl chloride or copolymerization of vinyl chloride with other unsaturated compounds, the vinyl chloride being in greatest amount by weight.

~~246~~ ~~**VOLATILE ORGANIC COMPOUND (VOC)** - Any organic compound except non-precursor organic compounds.~~

~~247~~245 **WATERPROOF MASTIC COATINGS -** Weatherproof and waterproof coatings which are formulated to cover holes and minor cracks and to conceal surface irregularities.

~~248~~246 **WATERPROOF SEALERS -** Coatings which are formulated for the sole purpose of protecting porous substrates by preventing the penetration of water.

**SECTION 300 – STANDARDS**

301 **PROHIBITION - BITUMINOUS PAVEMENT SEALERS:** No person shall apply, sell, offer for sale or manufacture for sale within Maricopa County any architectural coating manufactured after July 13, 1988, which is recommended for use as a bituminous pavement sealer unless it is an emulsion type coating.

302 **INTERIM LIMITS - NON-FLAT ARCHITECTURAL COATINGS:** No person shall apply, sell, offer for sale or manufacture for sale within Maricopa County any non-flat architectural coating manufactured after July 13, 1989, which contains more than 3.2 lbs (380 g/l) of volatile organic compounds per gallon of coating, excluding water and any colorant added to tint bases. These limits do not apply to specialty coatings listed in Section 305 of this rule.

303 **FINAL LIMITS - NON-FLAT ARCHITECTURAL COATINGS:** No person shall apply, sell, offer for sale or manufacture for sale within Maricopa County any non-flat architectural coating manufactured after July 13, 1990, which contains more than 2.1 lbs (250 g/l) of volatile organic compounds per gallon of coating, excluding water and any colorant added to tint bases. These limits do not apply to specialty coatings listed in Section 305 of this rule.

304 **LIMITS - FLAT ARCHITECTURAL COATINGS:** No person shall apply, sell, offer for sale or manufacture for sale within Maricopa County any flat architectural coating manufactured after July 13, 1989, which contains more than 2.1 lbs (250 g/l) of volatile organic compounds per gallon of coating, excluding water and any colorant added to tint bases. These limits do not apply to specialty coatings listed in Section 305 of this rule.

305 **LIMITS - SPECIALTY COATINGS:** No person shall apply, sell, offer for sale or manufacture for sale within Maricopa County any architectural coating that exceeds the following limits

manufactured after the date listed below. Limits are expressed in pounds of VOC per gallon of coating as applied, excluding water and any colorant added to tint bases.

| | Effective Dates | | |
|---|---|---|---|
| | 7/13/89 | 7/13/90 | 7/13/91 |
| **COATING** | | | (lb/gal) |
| Concrete Curing Compounds | - | - | 2.9 |
| Dry Fog Coating | | | |
| Flat | 4.6 | - | 3.5 |
| Non-flat | 3.5 | - | 3.3 |
| Enamel Undercoaters | 3.8 | - | 2.9 |
| General Primers, Sealers and Undercoaters | 3.3 | - | 2.9 |
| Industrial Maintenance Primers and Topcoats | | | |
| Alkyds | 4.2 | 3.5 | 3.5 |
| Catalyzed Epoxy | - | 4.2 | 3.5 |
| Bituminous Coating Materials | - | - | 3.5 |
| Inorganic Polymers | - | - | 3.5 |
| Vinyl Chloride Polymers | - | - | 3.5 |
| Chlorinated Rubbers | - | - | 3.5 |
| Acrylic Polymers | - | 3.5 | 3.5 |
| Urethane Polymers | - | 3.5 | 3.5 |
| Silicones | - | - | 3.5 |
| Unique Vehicles | - | - | 3.5 |
| Lacquers | - | - | 5.7 |
| Opaque Stains | 3.3 | - | 2.9 |
| Wood Preservatives | - | - | 2.9 |
| Quick Dry Enamels | - | - | 3.3 |
| Roof Coatings | - | - | 2.5 |
| Semi-transparent Stains | - | - | 2.9 |
| Semi-transparent and Clear Wood Preservatives | - | - | 2.9 |
| Opaque Wood Preservatives | 3.3 | - | 2.9 |
| Specialty Flat Products | - | - | 3.3 |
| Specialty Primers, Sealers & Undercoaters | - | - | 2.9 |
| *Stains, All* | - | - | *2.9* |
| Traffic Coatings | | | |
| Applied to Public Streets and Highways | 3.5 | - | 2.1 |
| Applied to other Surfaces | 2.1 | - | 2.1 |
| Black Traffic Coatings | - | - | 2.1 |
| Varnishes | - | 4.2 | 2.9 |
| Waterproof Mastic Coating | - | - | 2.5 |
| Waterproof Sealers | - | - | 3.3 |
| *Wood Preservatives Except Below Ground* | - | - | *2.9* |

~~Note 2~~[2]

**306** **EXEMPTIONS - SPECIFIC USE COATINGS:** This rule shall not apply to architectural coatings recommended by the manufacturer for use solely as one or more of the following:

**306.1** Below ground wood preservative coatings.

**306.2** Bond breakers.

**306.3** Fire retardant coatings.

**306.4** Graphic arts coatings (sign paints).

**306.5** Mastic texture coatings.

**306.6** Metallic pigmented coatings.

**306.7** Multi-colored paints.

**306.8** Quick-dry primers, sealers and undercoaters.

**306.9** Shellacs.

**306.10** Swimming pool paints.

**306.11** Tile-like glaze coatings.

**307** **EXCEPTION - SMALL CONTAINERS:** The provisions of this rule shall not apply to architectural coatings supplied in containers having capacities of one quart or less.

**SECTION 400 - ADMINISTRATIVE REQUIREMENTS**

**401** **LABELING REQUIRED:** Effective July 13, 1989, containers for all coatings subject to this rule shall carry a statement of the manufacturer's recommendation regarding thinning of the coatings. Data may be quantified with either English or metric units. This requirement shall not apply to the thinning of the architectural coatings with water. The recommendation shall specify that the coating is to be employed without thinning or diluting under normal environmental and application conditions, unless the recommended thinning for normal environmental and application conditions does not cause the coating to exceed its applicable standard. Architectural coatings subject to the Federal Insecticide, Fungicide and Rodenticide Act shall not be subject to the labeling requirements of this rule.

[2] ~~This note is not part of Rule 335. For the reader's convenience, words in italics are not part of this Rule 335, but are alphabetized repeats of listed coatings.~~

**402** **MANUFACTURE DATE REQUIRED:** Containers for all coatings subject to the provisions of this rule shall display the date of manufacture of the contents or a code indicating the date of manufacture. The manufacturers of such coatings shall file with the Control Officer an explanation of each code.

**SECTION 500 - MONITORING AND RECORDS**

**501** **DETERMINATION OF COMPLIANCE:** Testing procedures to determine compliance with prescribed VOC limits shall be consistent with Reference Methods 24 and 24A in the Arizona Testing Manual for Air Pollutant Emissions.

## REGULATION III - CONTROL OF AIR CONTAMINANTS

## RULE 336
## SURFACE COATING OPERATIONS

### INDEX

**SECTION 100 – GENERAL**

101 PURPOSE

102 APPLICABILITY

**SECTION 200 - DEFINITIONS**

201 ADHESIVE

202 AEROSOL CAN

203 AIR DRIED COATING

204 BAKED COATING

205 CAN COATING

206 CAN PRINTING INK

207 CLEAR COAT

208 COIL COATING

209 DAY

210 ELECTROSTATIC SPRAY/SYSTEM

211 EMISSION CONTROL SYSTEM (ECS)

212 END SEALING COMPOUND

213 EXEMPT EVAPORATING COMPONENTS (EXEMPT COMPOUNDS)

214 EXTERIOR BASECOAT

215 EXTREME PERFORMANCE COATING

216 FABRIC

217 FABRIC COATING

218 FILM COATING

219 FLEXIBLE PLASTIC PART OR PRODUCT

220 HEAT SENSITIVE MATERIAL

221 HIGHWAY VEHICLE

222 INTERIOR BASECOAT

223 INTERIOR BODY SPRAY

224 LARGE APPLIANCE

225 LOW PRESSURE SPRAY GUN

226 METAL FURNITURE

227 MINUS EXEMPT COMPOUNDS OR MINUS EXEMPT EVAPORATING COMPONENTS

228 MOBILE EQUIPMENT

~~229 NON-PRECURSOR ORGANIC COMPOUND~~

~~230~~ 229 ORGANIC COMPOUND

~~231~~ 230 OTHER METAL PARTS AND PRODUCTS

~~232~~ 231 OVERVARNISH

~~233~~ 232 PAPER COATING

~~234~~ 233 PLASTIC

~~235~~ 234 POLYESTER AND POLYESTER RESIN

~~236~~ 235 POLYESTER COMPOSITE

~~237~~ 236 PRIMER

~~238~~ 237 QUALITY CLASS Q

~~239~~ 238 REFINISHING

~~240~~ 239 REPAIR COATING

~~241~~ 240 RESTRICTED SPRAY GUN

~~242~~ 241 SILICONE RELEASE COATING

~~243~~ 242 SMALL SURFACE-COATING SOURCE (SSCS)

~~244~~ 243 STRIPPABLE BOOTH COATING

~~245~~ 244 SURFACE COATING

~~246~~ 245 SURFACE COATING OPERATION

~~247~~ 246 THREE-PIECE CAN SIDE-SEAM COAT

~~248~~ 247 TOPCOAT

~~249~~ 248 TOTAL VOC VAPOR PRESSURE (VOC COMPOSITE PARTIAL PRESSURE)

~~250~~ 249 TOUCH UP COATING

~~251~~ 250 TWO-PIECE CAN EXTERIOR END COAT

~~252~~ 251 VINYL COATING (COATING ON VINYL)

~~253~~ 252 VOC-BORNE COATING

~~254~~ 253 VOC-BORNE DILUENT

~~255~~ 254 VOC CONTENT

~~256 VOLATILE ORGANIC COMPOUND (VOC)~~

**SECTION 300 – STANDARDS**

301 SURFACE COATINGS

302 APPLICATION METHODS FOR SURFACE COATINGS

303 CLEANUP OF APPLICATION EQUIPMENT

304 HANDLING AND DISPOSAL OF VOC

305 EXEMPTIONS

306 REQUIREMENTS FOR AIR POLLUTION CONTROL EQUIPMENT AND ECS MONITORING EQUIPMENT

**SECTION 400 - ADMINISTRATIVE REQUIREMENTS**

401 COMPLIANCE SCHEDULE

**SECTION 500 - MONITORING AND RECORDS**

501 RECORDKEEPING AND REPORTING

502 ECS RECORDING REQUIREMENTS

503 COMPLIANCE DETERMINATION AND TEST METHODS

504 FORMULA FOR TOTAL VOC VAPOR PRESSURE

**Revised 07/13/88**

**Revised 09/21/92**

**Revised 06/19/96**

**Revised 04/07/99**

**Revised 09/25/13**

**MARICOPA COUNTY**

**AIR POLLUTION CONTROL REGULATIONS**

**REGULATION III - CONTROL OF AIR CONTAMINANTS**

**RULE 336**

**SURFACE COATING OPERATIONS**

**SECTION 100 – GENERAL**

**101 PURPOSE:** To limit the emission of volatile organic compounds (VOCs) from surface coating operations.

**102** **APPLICABILITY:** This rule applies to coating operations listed in Table 1 of this rule that are not more specifically regulated by another rule within Rules 300 to 359 of Regulation III. Examples of coating operations not regulated by this rule appear in subsection 305.1.

**102.1** Surface-coating activities regulated under this rule include, but are not limited to, the application of coating, coating preparation/mixing at the facility applying the coating, and the cleanup of coating application equipment.

**102.2** Subsections 305.2 through 305.7 set forth partial or conditional exemptions for certain materials or uses employed by a surface coating operation subject to this rule.

**102.3** This rule is not applicable to coatings having a VOC content, minus exempt compounds, of less than 0.15 lb VOC/gal (18g/L) nor to solvents having a VOC content of material less than 0.15 lb VOC/gal.

**102.4** **NSPS & NESHAP:** In addition to this rule, facilities may be subject to New Source Performance Standards (NSPS) in Rule 360 and/or to National Emission Standards for Hazardous Air Pollutants (NESHAP) in Rule 370 of these Rules and Regulations.

**SECTION 200 – DEFINITIONS:** For the purpose of this rule, the following definitions shall apply~~:~~, in addition to those definitions found in Rule 100 (General Provisions and Definitions) of these rules. In the event of any inconsistency between any of the Maricopa County air pollution control rules, the definitions in this rule take precedence.

**201** **ADHESIVE -** A material used for the primary purpose of bonding two or more surfaces together.

**202** **AEROSOL CAN -** A non-refillable hand-held container from which a product is dispensed by means of pressurized propellant packaged within the container.

**203** **AIR-DRIED COATING -** A coating which is dried by the use of air or forced warm air at temperatures up to and including 200°F (93.3°C).

**204** **BAKED COATING -** A coating that is dried or cured in an oven in which the oven temperature exceeds 200°F (93.3°C).

**205** **CAN COATING -** Any coating used in the production of metal cans.

**206** **CAN PRINTING INK -** A fluid or viscous formulation used in can printing that imparts design, pattern, and/or alphanumeric symbols to a can.

**207** **CLEAR COAT -** Any coating which lacks color or opacity or is transparent.

**208** **COIL COATING -** Any coating applied to the surface(s) of flat metal sheets or strips that are formed into rolls or coils not used to make cans.

**209** **DAY -** A period of 24 consecutive hours beginning at midnight.

**210** **ELECTROSTATIC SPRAY/SYSTEM -** A method of applying atomized paint by electrically charging the coating and the object being coated with opposing charges. A higher proportion of the coating reaches and coats the object than would occur in the absence of a charge.

**211** **EMISSION CONTROL SYSTEM (ECS) -** A system, approved in writing by the Control Officer, designed and operated in accordance with good engineering practice to reduce emissions of volatile organic compounds. Such system consists of an emissions collection subsystem and an emissions processing subsystem.

**212** **END SEALING COMPOUND -** A compound which is coated onto can ends and functions as a gasket when the end is attached to the can.

**213** **EXEMPT EVAPORATING COMPONENTS (EXEMPT COMPOUNDS) -** The non-VOC, evaporating portion of a coating formulation; this necessarily includes all non-precursor organic compounds, as well as water and other inorganic liquids and gases.

**214** **EXTERIOR CAN-BASECOAT -** Any coating applied to the exterior of a can to provide protection for the metal or to provide background for any lithographic or printing operation.

**215** **EXTREME PERFORMANCE COATING -** A coating used on a surface where the coated surface in its intended use is at temperatures consistently in excess of 250°F (121°C).

**216** **FABRIC -** Textile material. Non-manufactured items from nature are not fabric except for natural threads, fibers, filaments, and similar that have been manufactured into textile fabric.

**217** **FABRIC COATING -** Any decorative or protective coating or reinforcing material applied onto or impregnated into textile fabric.

**218** **FILM COATING -** Any coating applied in a web coating process on film substrate other than paper or fabric, including, but not limited to, typewriter ribbons, photographic film, magnetic tape and metal foil gift wrap.

**219** **FLEXIBLE PLASTIC PART OR PRODUCT -** A plastic part or product designed to withstand significant deformation without damaging it for its intended use. Not included are flexible plastic parts that are found on a can, coil, metal furniture, or large appliance, or that are already a part of

an aerospace component, highway vehicle, mobile equipment, architectural building or structure, or a previously coated marine-vessel.

**220** **HEAT SENSITIVE MATERIAL -** Materials which cannot consistently be exposed to temperatures greater than 203°F (95°C) without materially affecting desired function, performance, or other characteristics.

**221** **HIGHWAY VEHICLE** - Any vehicle that is physically capable of being driven upon a highway including, but not limited to, cars, pickups, vans, trucks, truck-tractors, motorhomes, motorcycles, and utility vehicles.

**222** **INTERIOR BASECOAT -** Any coating applied to the interior of a can to provide a protective lining between the intended contents and the metal shell of the can.

**223** **INTERIOR BODY SPRAY -** Any coating sprayed onto the interior of a can to provide a protective film between the intended contents and the metal shell of the can.

**224** **LARGE APPLIANCE -** A door, case, lid, panel, or interior support part of residential and commercial washers, dryers, ranges, refrigerators, freezers, water heaters, dishwashers, trash compactors, air conditioners, evaporative coolers and other similar products.

**225** **LOW PRESSURE SPRAY GUN -** An air-atomized spray gun that, by design, functions best at tip pressures below 10 psig (516 mm Hg), measured according to subsection 503.1d of this rule, and for which the manufacturer makes no claims to the public that the gun can be used effectively above 12 psig (619 mm Hg).

**226** **METAL FURNITURE -** Any furniture made of metal or any metal part which will be assembled with other parts made of metal or other material(s) to form a furniture piece.

**227** **MINUS EXEMPT COMPOUNDS or MINUS EXEMPT EVAPORATING COMPONENTS -** See ***VOC Content Minus Exempt Compounds*.**

**228** **MOBILE EQUIPMENT** - Any equipment that is physically capable of being driven or drawn upon a highway including, but not limited to, the following types of equipment: construction vehicles (such as mobile cranes, bulldozers, concrete mixers); farming equipment (wheel tractor, plow, pesticide sprayer); hauling equipment (truck trailers, utility bodies, camper shells); and miscellaneous equipment (street cleaners, mopeds, golf carts).

~~229~~ ~~**NON-PRECURSOR ORGANIC COMPOUND** - Any of the organic compounds which have been designated by the EPA as having negligible photochemical reactivity. EPA designates such compounds as "exempt". A listing of these compounds is found in Rule 100.~~

~~230~~229 **ORGANIC COMPOUND -** Any compound of carbon excluding carbon monoxide, carbon dioxide, carbonic acid, carbonates, and metallic carbides.

~~231~~230 **OTHER METAL PARTS AND PRODUCTS -** Any metal part or product, excluding the following items that are made of metal: can, coil, furniture, large appliance, aerospace component, metal foil, metal textile fabric, semiconductor metal, highway vehicle, mobile equipment, an architectural building or structure, a previously coated marine-vessel.

~~232~~231 **OVERVARNISH -** Any coating applied to a can to reduce the coefficient of friction, to provide gloss, or to protect the finish against abrasion and/or corrosion.

~~233~~232 **PAPER COATING -** Any coating applied on or impregnated into paper, including, but not limited to, adhesive tapes and labels, book covers, post cards, office copier paper, drafting paper and pressure sensitive tapes.

~~234~~233 **PLASTIC -** Any solid, synthetic: resin, polymer, or elastomer, except rubber. For the purposes of this rule, plastic film is considered film; fabric and paper made of polymeric plastic fibers are considered fabric and paper, respectively.

~~235~~234 **POLYESTER and POLYESTER RESIN -** A complex, polymeric ester containing difunctional acids.

~~236~~235 **POLYESTER COMPOSITE -** Cured material made of polyester resin with reinforcing material imbedded in it, such as glass fibers.

~~237~~236 **PRIMER -** A coating applied directly to substrate for any one or combination of the following purposes: corrosion prevention, protection from the environment, functional fluid resistance, or adhesion of subsequent coatings.

~~238~~237 **QUALITY CLASS Q -** Any system, structure, coating or other component which, if defective or inoperable, could cause or increase the severity of a nuclear incident, thereby imposing undue risk to the health and safety of the public.

~~239~~238 **REFINISHING -** Recoating a used object's surface which arrives at the refinisher with a coating or with a previous coating worn away by use.

~~240~~239 **REPAIR COATING -** A coating or coating operation used to recoat the portion of a completed finish that suffered post-production damage at the facility where the finish was applied.

~~241~~240 **RESTRICTED SPRAY GUN -** Any air-atomizing spray gun that is not a low pressure spray gun, and any other coating gun that is not on the list in subsection 303.1 of this rule.

~~242~~241 **SILICONE RELEASE COATING -** Any resin coating, the major cured portion of which is silicone resin, having as its primary function the release of food products from metal surfaces such as baking pans.

~~243~~242 **SMALL SURFACE-COATING SOURCE (SSCS) -** A facility from which the total VOC emissions for all surface coating operations that are subject to this rule without, or prior to, any emission control, is less than 15 pounds (6.8 kg) per day and less than 2 tons (1814 kg) per year; as demonstrated by both adequate records of coating and diluent use (pursuant to subsection 501.2) and a separate tally of the number of days each month that such coating operations occur.

~~244~~243 **STRIPPABLE BOOTH COATING -** A temporary coating that is applied to spray booth surfaces to receive the overspray and protect the surfaces, and which is designed to readily be pulled off the substrate in strips or sheets, and disposed of.

~~245~~244 **SURFACE COATING -** Any liquid, fluid, or mastic composition which is converted to a solid (or semi-solid) protective, decorative, or adherent film or deposit after application as a thin layer. Surface coating is generally distinct and different from impregnation and from applying adhesive for bonding purposes.

~~246~~245 **SURFACE COATING OPERATION -** Preparation, handling, mixing, and application of surface coating, and cleanup of application-equipment and enclosures at a facility where surface coating is applied.

~~247~~246 **THREE-PIECE CAN SIDE-SEAM COAT -** Any coating sprayed onto the interior and/or exterior of a can body seam on a three-piece can to protect the exposed metal.

~~248~~247 **TOPCOAT -** The final, permanent, coating-formulation that completed the finish on a surface.

~~249~~248 **TOTAL VOC VAPOR PRESSURE (VOC COMPOSITE PARTIAL PRESSURE) –** The sum of the partial pressures of the compounds defined as VOCs, calculated according to the formula in Section 504 of this rule.

~~250~~249 **TOUCH UP COATING -** A coating used to cover minor coating imperfections after the main coating operation. This includes touch-up coating that accompanies the purchase of an object already coated with that coating.

~~251~~250 **TWO-PIECE CAN EXTERIOR END COAT -** Any coating applied to the exterior end of a can to provide protection to the metal.

~~252~~251 **VINYL COATING (COATING ON VINYL) -** Any decorative or protective coating or reinforcing coating applied over vinyl-coated textile fabric or vinyl sheets.

~~253~~252 **VOC-BORNE COATING -** A coating that contains more VOC than water, by weight.

~~254~~253 **VOC-BORNE DILUENT -** A solvent or other diluent that contains more VOC than water, by weight.

~~255~~254 **VOC CONTENT -** In this rule, VOC content is determined by one of the following two formulas: To determine compliance with Table 1 or the 2.0 lb VOC/gal threshold in Section 302, use the following formula in subsection 255.1; For other purposes, use the formula in subsection 255.2:

~~255.1~~254.1 **VOC CONTENT MINUS EXEMPT COMPOUNDS** (is the same as **VOC CONTENT MINUS EXEMPT EVAPORATING COMPONENTS**) (also known as **"THE EPA METHOD 24 VOC CONTENT"** on manufacturer's data sheets.)

$$VOC\ Content\ Minus\ Exempt\ Compunds = \frac{W_s - W_w - W_{es}}{V_m - V_w - V_{es}}$$

Using consistently either English or metric measures in the calculations where:

$W_s$ = weight of all volatile material in pounds (or grams), including VOC, water, non-precursor organic compounds and dissolved vapors

$W_w$ = weight of water in pounds (or grams)

$W_{es}$ = weight of all non-precursor compounds in pounds (or grams)

$V_m$ = volume of total material in gallons (or liters)

$V_w$ = volume of water in gallons (or liters)

$V_{es}$ = volume of all non-precursor compounds in gallons (or liters)

~~255.2~~254.2 **VOC CONTENT OF MATERIAL (MATERIAL VOC-CONTENT)**

$$VOC\ Content\ of\ Material = \frac{W_s - W_w - W_{es}}{V_m}$$

Using consistently either English or metric measures in the calculations,

where: $W_s$ = weight of all volatile material in pounds (or grams) including VOC, water, non-precursor organic compounds and dissolved vapors

$W_w$ = weight of water in pounds (or grams)

$W_{es}$ = weight of all non-precursor compounds in pounds (or grams)

$V_m$ = volume of total material in gallons (or liters)

~~**256**~~ ~~**VOLATILE ORGANIC COMPOUND (VOC)** - Any organic compound which participates in atmospheric photochemical reactions, except non-precursor organic compounds.~~

**SECTION 300 – STANDARDS**

**301** **SURFACE COATINGS:** A person shall comply with one of the following for all applications of surface coatings:

**301.1** Meet the limits in Table 1.

**301.2** Operate an ECS in accordance with subsection 306.1 when applying a coating that exceeds the VOC limits in Table 1.

**301.3** Qualify for an exemption under Section 305.

**TABLE 1**

| **SURFACE COATING EMISSION LIMITS** | | |
|---|---|---|
| TYPE OF SURFACE COATING | LIMITS AS APPLIED: VOC content minus exempt compounds (see subsection 255.1) | |
| **Column I** | **Column II** lbs/gal | g/liter |
| **Can Coating** | | |
| Sheet Basecoat (Exterior and Interior) and Overvarnish | 2.8 | 340 |
| Two-Piece Can Exterior (Basecoat and Overvarnish) | 2.8 | 340 |
| Two and Three-Piece Can Interior Body Spray | 4.2 | 510 |
| Two-Piece Can Exterior End (Spray or Roll Coat) | 4.2 | 510 |
| Three-Piece Can Side-Seam Spray | 5.5 | 660 |
| End Sealing Compound | 3.7 | 440 |
| Can Printing Ink | 2.5 | 300 |
| **Coil Coating (any coat)** | 2.6 | 310 |
| **Metal Furniture Coating** | 3.0 | 360 |
| **Large Appliance Coating** | 2.8 | 340 |
| **OTHER METAL PARTS AND PRODUCTS COATING** (As defined in Section 231) The following includes Non-adhesive Coating, Adhesive, Adhesive Primer, Caulking, and Beaded Sealants: | | |
| **Air-Dried Coating** | 3.5 | 420 |

| | | |
|---|---|---|
| **Baked Coating** [above 200°F (93°C)] | 3.0 | 360 |
| **Silicone Release Coating:** Baked or Air-Dried | 3.5 | 420 |
| | | |
| **Fabric Coating** | 2.9 | 350 |
| **Film Coating** | 2.9 | 350 |
| **COATING PLASTIC PARTS AND PRODUCTS THAT ARE** **Not** Defined as Flexible | 3.5 | 420 |
| **COATING FLEXIBLE PLASTIC PARTS AND PRODUCTS** | | |
| Primer | 4.1 | 490 |
| Color Topcoat | 3.8 | 450 |
| Basecoat/Clear Coat (Combined System) – Limit for either coat | 4.5 | 540 |
| **Paper Coating, including Adhesives** | 2.9 | 350 |
| **Vinyl Coating (Coating on Vinyl)** | 3.8 | 450 |
| **STRIPPABLE BOOTH COATINGS** | 2.0 | 240 |

**302** **APPLICATION METHODS FOR SURFACE COATINGS:** A person shall employ one of the following for all applications of surface coating containing more than 2 pounds of VOC per gallon (240 g/L) minus exempt compounds:

**302.1** A low pressure spray gun; or

**302.2** An electrostatic system; or

**302.3** A system that atomizes principally by hydraulic pressure, including “airless” and “air assisted airless”; or

**302.4** Non-atomizing or non-spraying application methods, such as but not limited to dipping, rolling, or brushing; or

**302.5** Any method which is approved by the Administrator of the Federal EPA and the Control Officer as having a transfer efficiency of 65% or greater.

**303** **CLEANUP OF APPLICATION EQUIPMENT:** A person shall comply with the following when using VOC-containing material to clean application equipment:

**303.1** Disassemble any spray gun and other application equipment and clean it in:

**a.** A container which remains covered at all times, except when the application equipment is being handled in the container, or transferred into or out of the container; or

**b.** A commercially-sold gun cleaning machine which shall be operated and maintained as stipulated in the Air Pollution Permit’s Operation and Maintenance (O&M) Plan,

or – in the absence of its mention in the O&M Plan – according to manufacturer's or distributor's instructions.

**303.2 Vapor Pressure Limits:** Any person subject to this rule using VOC-solvent to clean coating application equipment shall use only solvent which, as used, has a VOC-vapor pressure below 35 mm Hg at 20° C (68° F), except for sprayless equipment exempted pursuant to subsection 305.6.

**304 HANDLING AND DISPOSAL OF VOC:**

**304.1 Use And Storage:** A person shall cover and keep covered each VOC containing material which is not currently in use. A person shall store finishing and cleaning materials in closed or covered leak-free containers.

**304.2 Disposal Of VOC And VOC-Containing Material:** A person shall store all VOC-containing materials intended for disposal including, but not limited to, rags, waste coatings, waste brushes, waste rollers, waste applicators, waste solvents, and their residues, in closed, leakfree containers which are legibly labeled with their contents and which remain covered when not in use.

**305 EXEMPTIONS:**

**305.1 Categorical Exemptions:** This rule does not apply to the following operations:

**a.** Aerospace coating operations (Rule 348).

**b.** Architectural coating, including buildings and erected structures (Rule 335).

**c.** Cleaning: VOC loss from cleaning or stripping a surface for coating or other purpose is regulated by Rule 331.

**d.** Marine vessel exterior refinishing.

**e.** Polyester coatings applied to polyester composites.

**f.** Printing and graphic arts coating (Rule 337).

**g.** Semiconductor manufacturing (Rule 338).

**h.** Coating a highway vehicle or mobile equipment (Rule 345).

**i.** Wood: Coating Wood Furniture (Rule 342); Coating Wood Millwork (Rule 346).

**305.2 Exemptions For Qualified Materials:** Rule 336 does not apply to the following materials that meet the specific qualification(s) and limitation(s) set forth herein:

**a. Leak-Preventing Materials:** Sealants, adhesives, caulking, and similar materials used on the following substrates for the primary purpose of leak prevention are exempt from this rule:

**(1)** Non-metallic substrates; and

**(2)** Used substrates, post manufacture, such as, but not limited to, old joints and seals on pipe and valve assemblies.

**b. Adhesive Use:**

**(1)** Adhesive and adhesive primer applications are exempt from this rule, except for the 2 categories that appear in Table 1, namely adhesive materials applied to other metal parts and products (as defined in Section 231), and adhesives used in paper coating (as defined in Section 233).

**(2)** Any adhesive exempted by this Rule 336 and to which no other rule in Regulation III specifically applies shall comply with the provisions of Rule 330 (Volatile Organic Compounds) of these Rules & Regulations.

**c. Certain Joint Fillers:** Caulking and beaded sealants used to fill gaps or to fill joints between surfaces are exempt from this rule, except those used in manufacturing other metal parts and products as defined in Section 231 of this rule, or in the manufacturing of cans.

**d. Extreme Performance Coatings:** Extreme performance coatings are exempt from the VOC limits of Table 1 when used under the following conditions:

**(1)** Used on internal combustion engine components that are normally above 250°F (121°C) during use; or

**(2)** Used at temperatures above 250°F (121°C) on items that are both included under SIC (Standard Industrial Classification, 1987) codes 3661, 3663, 3669, 3677, 3678, 3679, or 3769 and are electronic products in space vehicles and/or are communications equipment. The US Government Printing Office "Standard Industrial Classification Manual, 1987" (and no future editions) is incorporated by reference and is on file at the Maricopa County ~~Environmental Services~~ Air

Quality Department, 1001 N. Central ~~Avenue~~ Ave., ~~Suite 201,~~ Phoenix, Arizona 85004~~-1942~~.

**305.3** **ECS Use In Lieu Of Equipment/Practice:** In lieu of meeting an equipment or work practice standard within Sections 302, 303, or 304, an owner or operator is allowed to instead use an ECS that has a capture efficiency not less than 90% and meets all ECS requirements in Section 306.

**305.4** **Spray-Gun And VOC-Limit Exemptions:** The following are exempt from subsection 301.1, subsection 301.2, and Section 302 of this rule:

**a.** Coating with an aerosol can.

**b.** Touch up or repair-coating operations as defined in Sections 250 and 240.

**c.** Low usage coatings which in aggregate of all formulations do not exceed 55 gallons (208 liters) per year facility-wide if the operator updates usage records of these coatings on each day of their use, pursuant to subsection 501.2.

**d.** A small surface-coating source (SSCS) as defined in Section 243. However, once a small surface-coating source exceeds either the 15 lb per day or the 2 tons per year limits that are required to maintain SSCS status, that facility is permanently subject to the limits of subsection 301.1, subsection 301.2, and Section 302, with the following exception:

**(1)** For such a facility that does not have either a 15 lb/day or a 2 ton/year VOC-emission limit in an Air Pollution Permit for processes regulated by this rule, an owner or operator may retain the exemption if s/he agrees in writing to enforceable permit conditions that establish these or stricter limits.

**(2)** However, a facility that violates its permit limit of either 15 lbs VOC/day or 2 tons VOC/yr. for coating process regulated by this Rule 336 is permanently subject to the limits of subsections 301.1 and 301.2, and Section 302.

**e.** A Quality Class Q protective coating that is used on equipment, structures, and/or components within a containment facility of a nuclear power plant and is approved in accordance with either ANSI standards N101.2 and N101.4 or with ASTM Standards D3911 and D3843.

**f.** A tactical military-equipment coating that is approved in ~~an MCESD~~ a Maricopa County Air Pollution Permit subsequent to a sufficient demonstration by the user that no compliant substitute exists.

**305.5 Special Facilities/Operations:**

**a. Silicone Release Coatings:** Silicone release coating operations controlled by an ECS pursuant to subsection 301.2 are exempt from the 85 percent overall control efficiency requirement if the ECS demonstrates at least 70 percent overall control and the coating is applied with a liquid seal air spray system.

**b. Bonding Impact Resistant Rubber Lining To Metal:** An adhesive and an adhesive-primer are exempt from Table 1 limits, but shall not have a VOC content of material exceeding 850 grams of VOC per liter (7.1 lb/gal), if such adhesive is used to bond sheets/strips of rubber to metal equipment so that such rubber sheathing directly contacts material received by the metal and so protects the metal. This exception does not apply to any other situations where adhesives are used to bond rubber to metal.

**305.6 Exemption Of Coating Applicator Cleanup:** A person is allowed to use solvent that has at 20° C (68° F) a total VOC vapor pressure above 35 mm Hg for cleaning coating-application equipment, but only if such application equipment does not use spray devices and the same principal solvent is used for cleaning as is used in the coating.

**305.7 Low-Usage Allowance For Restricted Guns:** A person may employ spray guns otherwise prohibited by Section 302 for use with coatings over 2 lb VOC /gal under the following limited conditions:

**a.** If VOC emissions from the finishing application station, are captured and directed to an ECS complying with the provisions of Section 306.

**b.** To coat the inside of pipes and tubes with a wand-style applicator.

**c.** Using an airbrush or other small gun that has a reservoir capacity not exceeding 250 cc (8.8 fluid ounces) and is used solely for detailing, lettering, touchup, and/or repair.

## 306 REQUIREMENTS FOR AIR POLLUTION CONTROL EQUIPMENT AND ECS MONITORING EQUIPMENT:

**306.1 ECS Control Efficiencies:** To meet the requirements pursuant to subsection 301.2, subsection 305.3, or subsection 305.7, an ECS shall be operated as follows:

**a. Overall ECS Efficiency:** Overall, the ECS shall prevent at least 85% of the mass of the VOC emitted by each coating or process so controlled from entering the atmosphere except as successfully controlled pursuant to the alternative in subsection 306.1c(2).

**b. Capture Efficiencies**:

**(1)** For an ECS used pursuant to subsection 301.2 and/or subsection 305.7, capture shall be at least 87%.

**(2)** For an ECS used pursuant to subsection 305.3, capture shall be at least 90%.

**c. Control Efficiency Of The Emissions Processing Subsystem:**

**(1)** The emissions-processing subsystem of the ECS shall reduce the mass of VOC entering it by at least 90 percent; or

**(2) Alternative For Very Dilute Input**: For VOC input-concentrations of less than 100 ppm (as carbon) at the inlet of the ECS emissions processing subsystem, an ECS' VOC processing subsystem also satisfies the processor efficiency requirements of this rule if:

**(a)** The VOC output is consistently less than 20 mg VOC/M3 (as carbon) adjusted to standard conditions; and

**(b)** The ECS consistently shows an overall control efficiency of at least 85% when tested pursuant to subsection 503.3 at VOC input-concentrations exceeding 100 ppm (as carbon).

**d.** Coating that exceeds the applicable VOC-limits in Table 1 shall be clearly identified such that coating-operators are informed an ECS must be used.

**306.2 Operation And Maintenance (O&M) Plan Required For ECS:**

**a.** An owner or operator shall provide and maintain (an) O&M Plan(s) for any ECS, any other emission processing equipment, and any ECS monitoring devices that are used pursuant to this Rule 336 or to an air pollution control permit.

**b.** The owner or operator shall submit to the Control Officer for approval the O&M Plans of each ECS and each ECS monitoring device that is used pursuant to this Rule 336.

**c.** The owner or operator shall comply with all the identified actions and schedules provided in each O&M Plan.

**306.3** **Providing And Maintaining ECS Monitoring Devices:** Any person incinerating, adsorbing, or otherwise processing VOC emissions pursuant to this rule shall provide, properly install and maintain in calibration, in good working order and in operation, devices described in the facility's O&M Plan that indicate temperatures, pressures, rates of flow, or other operating conditions necessary to determine if air pollution control equipment is functioning properly and is properly maintained. Records shall kept pursuant to Section 502 which demonstrate that the ECS meets the overall control standard required by subsection 306.1.

**306.4** **O&M Plan Responsibility:** An owner or operator of a facility that is required to have an O&M Plan pursuant to subsection 306.2 must fully comply with all O&M Plans that the owner or operator has submitted for approval, but which have not yet been approved, unless notified otherwise by the Control Officer in writing.

## SECTION 400 - ADMINISTRATIVE REQUIREMENTS

### 401 COMPLIANCE SCHEDULE:

**401.1** By August 1, 1999:

**a.** All new recordkeeping provisions shall be in effect, including subsections 501.1c and 501.2a.

**b.** The intention to use an Emission Control System (ECS) shall be announced to the Control Officer in writing if:

**(1)** The ECS is used as an alternative to meeting the spray-gun provisions of Section 302; or

**(2)** The ECS is used as an alternative to meeting the gun cleaning machine provisions of Section 303.

**401.2** By November 1, 1999, the following shall be in continuing use:

**a.** Spray guns required pursuant to Section 302;

**b.** Cleaning-solvent(s) having the required vapor pressure pursuant to Section 303, and the data sheet(s) confirming the vapor pressure.

**401.3** By May 1, 2000, the ECS announced pursuant to subsection 401.1b shall be in continuing use.

## SECTION 500 - MONITORING AND RECORDS

**501** **RECORDKEEPING AND REPORTING:** Any person subject to this rule shall comply with the following requirements of subsections 501.1 and 501.2 that apply to materials regulated by this Rule 336. Records shall be retained for 5 years and shall be made available to the Control Officer upon request.

**501.1 Current Lists:**

**a.** Maintain a current list of coatings, adhesives, reducers, thinners, gun-cleaning materials, additives, and any other VOC-containing materials regulated by this rule; give the VOC content of material for each as received (before thinning). A complete, neat assemblage of this data meets the requirements for a list. Express VOC content in 1 of 3 forms: pounds VOC ~~336.18~~ per gallon, grams VOC per liter, or the percent VOC by weight along with the specific gravity or density, (2 numbers are required).

**b.** **Less Stringent Recordkeeping For Consistently Low Users:** An operator of a facility that always uses less than 2 gallons per day total of thinner and coating (listed in Table 1), meets the listing and recording requirements of subsections 501.1a, 501.1c, and 501.2 if:

**(1)** All purchase receipts/invoices of VOC-containing material that is regulated by this rule for the most recent 12 months are kept together; and

**(2)** Current data sheets show the VOC content of material for every VOC containing substance currently used that is regulated by this rule.

**c.** **Facilities That Are Not Small Surface-Coating Sources:** Facilities that are not small surface-coating sources shall do the following:

**(1)** **Coatings:** For all coatings (except those recorded under the subsection 305.4c low usage allowance), make the following listings for coatings and adhesives that have VOC limits in Table 1:

**(a)** **VOC Before Reducing:** The VOC content of each coating as received, minus exempt compounds. (This figure is sometimes called the "EPA Method 24" VOC content on manufacturer's data sheets). If the coating is a multi-part coating, list the VOC content which the manufacturer states the coating will have once you have mixed all the necessary parts together in the proportions specified by the manufacturer.

**(b)** **List Maximum VOC Content Of Coating As Applied:** For each coating that you thin/reduce or add any additive to, record in a permanent log either of the following:

**(i)** The maximum number of fluid ounces thinner/reducer that you ever add to a gallon of unreduced coating (or maximum g/liter), and the maximum fluid ounces of every other additive you mix into a gallon of the coating; or

**(ii)** The VOC content of the coating, after adding the maximum amount of thinner/reducer and other additives that you would ever add, as determined by the formula in subsection 255.1.

**(2)** **Applicator Cleanup Solvent:** Have a hardcopy of the VOC vapor pressure (VP) at 20°C (68°F) of solvent(s) used to clean spray guns, hoses, reservoirs, and any other coating application equipment. Any one of the following ways of providing the VP data is sufficient:

**(a)** A current manufacturer's technical data sheet;

**(b)** A current manufacturer's safety data sheet (MSDS);

**(c)** Actual test results; or

**(d)** A letter signed by an official or lab manager of the supplying facility.

**501.2** **Frequency Of Updating Usage Records:** Update your records, showing the type and amount used of each VOC-containing coating or adhesive which is regulated by name or type in Table 1, and update each VOC-containing material, related to surface coating, that is not addressed by Table 1. This includes, but is not limited to, thinners, surfacers, and diluents. Maintain records according to the following schedule:

**a.** **Small Surface-Coating Sources:** Small surface-coating sources shall update each month's records of coating use by the end of the following month.

**b.** **All Other Sources:** For a source that does not meet the definition of small surface-coating source:

**(1)** **Monthly:** Monthly update records of each coating used that complies with the VOC limits in Table 1. Complete a month's update by the end of the following month.

**(2)** **Daily:** Daily update the usage of each coating that exceeds its limits in Table 1, including coating exempted by subsection 305.4c.

**501.3** **Grouping By VOC Content:** For purposes of recording usage, coatings and adhesives that are in the same category in Table 1, and have similar VOC content, may be recorded under a name that includes the category name. The highest VOC content among the members of that grouping shall be assigned to that grouping, rounded to the nearest 10th of a pound. To identify what products belong within each group, after each group name and the group's VOC content of material must appear the name of each product in the group and its VOC content of material. **For example:** For flexible plastic parts, you use 20 gallons of primer that has 3.04 lb VOC/gal., 30 gallons of primer having 3.14 lb VOC/gal., and 40 gallons of primer having 2.89 lb VOC/gal. You may record usage as 90 gallons of flexible plastic primer containing 3.1 lb VOC/gal. If grams VOC per liter is used to record VOC content, round off to the nearest whole number of grams.

**502** **ECS RECORDING REQUIREMENTS:**

**502.1** On each day an ECS is used at a facility pursuant to this rule, an owner or operator of the facility shall:

**a.** Record the amount and VOC content of coating, the amount of catalyst/hardener, and the amounts of solvent, reducer, and diluent used that were subject to ECS control pursuant to this Rule 336; and

**b.** Make a permanent record of the operating parameters of the key systems as required by the O&M Plan; and

**c.** Make a permanent record of the maintenance actions taken, within 24 hours of the action's completion, for each day or period in which the O&M Plan requires that maintenance be done.

**502.2.** An explanation shall be entered for scheduled maintenance that is not performed during the period designated for it in the O&M Plan.

**503 COMPLIANCE DETERMINATION AND TEST METHODS:** When more than one test method is permitted for a determination, an exceedance of the limits established in the rule determined by any of the applicable test methods constitutes a violation of this rule.

**503.1 Compliance Determination:** The following means shall be used to determine compliance with this rule:

**a.** Measurement of VOC content of materials subject to Section 301 or Section 302 of this rule shall be conducted and reported using one of the following means:

**(1)** VOC content of coatings, solvents, and other substances having less than 5% solids will be determined by the test method in subsection 503.2f (BAAQMD Method 31 [April 15, 1992]) or 503.2g (SCAQMD Method 313-91 [April 1997]).

**(2)** The VOC content of coatings or other materials having 5% or more solids will be determined by the test method in subsection 503.2c (EPA Method 24), 503.2f (BAAQMD Method 31 [April 15, 1992]) or 503.2g (SCAQMD Method 313-91 [April 1997]).

**(a)** Plastisols, powder coatings, and radiation-cured coatings shall be cured according to the procedures actually used in the coating process being tested before final VOC-emission determinations are made.

**(b)** In the case of multi-component, polymerizing coatings tested according to 503.1a, Method 24 shall be modified to eliminate the post-mixing dilution-step (that employs toluene or other solvent). Instead, the mixture shall be spread by appropriate technique to form a thin layer, occupying the entire bottom of the foil pan. Techniques included in the method referenced in 503.1b can be used as a guide for such spreading.

**b.** The VOC content of gaseous emissions entering and exiting an ECS shall be determined by either EPA Method 18 referred to in subsection 503.2b, or EPA Method 25 and its submethod, referred to in subsection 503.2d.

**c.** Capture efficiency of an ECS shall be determined either by the methods in 503.2e (EPA Method 204 and its submethods), or by using mass balance calculation methods in concert with the methods in 503.2a (EPA Methods 2, 2a, 2c, and 2d).

**d.** Measurement of air pressure at the center of the spray gun tip and air horns of an air-atomizing spray gun (reference subsection 302.1 and Section 225) shall be performed using an attachable device in proper working order supplied by the gun's manufacturer for performing such a measurement.

**e.** Temperature measurements shall be done with an instrument with an accuracy and precision of less than one-half degree Fahrenheit (0.25°C) for temperatures up to 480°F (250°C).

**503.2** **Test Methods Adopted By Reference:** The EPA test methods as they exist in the Code of Federal Regulations (CFR) (July 1, 1998), as listed below, are adopted by reference. The other test methods listed here are also adopted by reference, each having paired with it a specific date that identifies the particular version/revision of the method that is adopted by reference. These adoptions by reference include no future editions or amendments. Copies of test methods referenced in this Section 503 are available at the Maricopa County ~~Environmental Services~~ Air Quality Department, 1001 ~~North~~ N. Central ~~Avenue~~ Ave., Phoenix, AZ, 85004~~-1942~~.

**a.** EPA Methods 2 ("Determination of Stack Gas Velocity and Volumetric Flow Rate"), 2a ("Direct Measurement of Gas Volume Through Pipes and Small Ducts"), 2c ("Determination of Stack Gas Velocity and Volumetric Flow rate in Small Stacks or Ducts"), and 2d ("Measurement of Gas volumetric Flow Rates in Small Pipes and Ducts"). All 4 of the foregoing methods are in 40 CFR 60, Appendix A.

**b.** EPA Method 18 ("Measurement of Gaseous Organic Compound Emissions by Gas Chromatography") and its submethods (40 CFR 60, Appendix A).

**c.** EPA Test Method 24 ("Determination of Volatile Matter Content, Water Content, Density, Volume Solids, and Weight Solids of Surface Coatings") (40 CFR 60, Appendix A).

**d.** EPA Method 25 ("Determination of Total Gaseous Nonmethane Organic Emissions as Carbon") and its submethods (40 CFR 60, Appendix A).

**e.** EPA Test Methods 204 ("Criteria For and Verification Of a Permanent or Temporary Total Enclosure"), 204a, 204b, 204c, 204d, 204e, and 204f (Appendix M, 40 CFR 51).

**f.** California's Bay Area Air Quality Management District (BAAQMD) Method 31 (April 15, 1992), "Determination of Volatile Organic Compounds in Paint Strippers, Solvent Cleaners, and Low Solids Coatings."

**g.** California's South Coast Air Quality Management District (SCAQMD) Method 313-91 (April 1997).

**503.3** **Test Methods For ECS:** For coatings/adhesives controlled pursuant to subsection 302.1 or subsection 305.3:

**a.** Measurements of VOC emissions from an ECS shall be conducted in accordance with EPA Methods 18 or its submethods, or by Method 25 or its submethods (40 CFR 60, Appendix A).

**b.** Capture efficiency of an ECS shall be determined by mass balance in combination with ventilation/draft rate determinations done in accordance with subsection 503.3c or with US EPA Test Methods 204, 204a, 204b, 204c, 204d, 204e, and 204f (Appendix M, 40 CFR 51).

**c.** Ventilation/draft rates shall be determined by EPA Methods 2, 2a, 2c, and 2d (40 CFR 60, Appendix A).

**504** **FORMULA FOR TOTAL VOC VAPOR PRESSURE:** Equivalent to: **VOC COMPOSITE PARTIAL PRESSURE.** Reference subsection 303.2

$$PP_c = \frac{\sum_{i=1}^{n} (W_i)(VP_i) / MW_i}{\frac{W_w}{18} + \sum_{i=1}^{m} \frac{W_{ej}}{MW_{ej}} + \sum_{i=1}^{n} \frac{W_i}{MW_i}}$$

$W_i$ = Weight of the "*i*"th VOC compound in grams

$W_w$ = Weight of water in grams

$W_{ej}$ = Weight of the "*j*"th non-precursor compound in grams

$MW_i$ = Molecular weight of the "*i*"th VOC compound in grams per gram mole, e.g., one gram-mole of isopropyl alcohol weighs 60 grams

$MW_{ej}$ = Molecular weight of the "*j*"th non-precursor compound, e.g., 1 gram-mole of acetone weighs 58 grams

$PP_c$ = VOC composite partial pressure at 20°C in mm mercury (Hg)

$VP_i$ = Vapor pressure of the "*i*"th VOC compound at 20°C in mm Hg

*18* = Weight of one gram-mole of water

**REGULATION III - CONTROL OF AIR CONTAMINANTS**

**RULE 338**

**SEMICONDUCTOR MANUFACTURING**

**INDEX**


**SECTION 100 – GENERAL**

101 PURPOSE

102 APPLICABILITY

**SECTION 200 – DEFINITIONS**

201 ACCEPTABLE TRACE VOC EMISSION

202 EMISSION CONTROL SYSTEM (ECS)

203 EXCEPTED CORROSIVE VOC

204 EXEMPT COMPOUNDS

205 FREEBOARD HEIGHT

206 FREEBOARD RATIO

~~207~~ ~~NON-PRECURSOR ORGANIC COMPOUND~~

~~208~~ 207 PHOTORESIST OPERATION

~~209~~ 208 SOLVENT

~~210~~ 209 SOLVENT CLEANING STATION

~~211~~ 210 STRIPPING

~~212~~ 211 VOC CONTENT OF MATERIAL

~~213~~ ~~VOLATILE ORGANIC COMPOUND (VOC)~~

**SECTION 300 – STANDARDS**

301 CONTROL OF PHOTORESIST OPERATIONS

302 USING SOLVENTS CONTAINING MORE THAN 10 PERCENT VOC

303 OPERATION AND MAINTENANCE (O&M) PLAN REQUIRED FOR ECS
304 OPERATE CORRECTLY
305 STORAGE AND DISPOSAL OF VOC
306 EXEMPTIONS

**SECTION 400 – ADMINISTRATIVE REQUIREMENTS**
401 COMPLIANCE SCHEDULE
402 CONTROL EFFICIENCY GENERALIZATION
403 APPLICABILITY OF RULE 331 FOR SUPPORT OPERATIONS

**SECTION 500 - MONITORING AND RECORDS**
501 MONITORING DEVICE RECORDS
502 RECORDKEEPING AND REPORTING
503 COMPLIANCE DETERMINATION
504 TEST METHODS

**Adopted 11/16/92**
**Revised 06/19/96**
**Revised 04/21/99**
**Revised 09/25/13**

**MARICOPA COUNTY**
**AIR POLLUTION CONTROL REGULATIONS**

**REGULATION III - CONTROL OF AIR CONTAMINANTS**

**RULE 338**
**SEMICONDUCTOR MANUFACTURING**

**SECTION 100 – GENERAL**

**101 PURPOSE:** To limit the emission of volatile organic compounds (VOC) from semiconductor manufacturing.

**102 APPLICABILITY:**

**102.1** This rule applies to making any semiconductor device, including diodes, zeners, stacks, rectifiers, integrated microcircuits, transistors, solar cells, light-sensing devices, and light-emitting devices. This rule applies to all direct processing of the wafer/die from crystal growth and wafer production through oxidation, photoresist operations, etching, doping,

epitaxial growth operations, circuit separation, encapsulation, and those assembly and test operations related to semiconductor manufacturing.

**102.2** Rule 338 does not apply to an accredited school that has an educational program in which semiconductors are either fully or partially made. However, this rule is applicable to schools that sell such semiconductor constructions for other than teaching and/or research purpose(s).

**SECTION 200 – DEFINITIONS:** For the purpose of this rule, the following definitions shall apply~~:~~, in addition to those definitions found in Rule 100 (General Provisions and Definitions) of these rules. In the event of any inconsistency between any of the Maricopa County air pollution control rules, the definitions in this rule take precedence.

**201** **ACCEPTABLE TRACE VOC EMISSION -** Emission so dilute that less than 50 ppm or 220 mg/M3 registers on a VOC detector when its probe is 1 inch (2.5 cm) from the surface of a potential VOC-emitter. Such detector shall be used pursuant to subsection 503.5, using EPA Test Method 21.

**202** **EMISSION CONTROL SYSTEM (ECS) -** A system, approved in writing by the Control Officer, designed and operated in accordance with good engineering practice to reduce emissions of volatile organic compounds. Such system consists of an emissions collection subsystem and an emissions processing subsystem.

**203** **EXCEPTED CORROSIVE VOC -** The following compounds emitted either from photoresist process(es) or from semiconductor cleaning processes: citric acid, acetic acid, methylsulfonic acid, and tetramethyl-ammonium hydroxide. Also included are the following categories of corrosive VOC emitted either from photoresist process(es) or from semiconductor cleaning processes: acidic VOC emitted by any organic acid having a pH of 2 or less in its most acidic aqueous state, and basic VOC emitted from a caustic organic solution having a pH of 12.5 or more in its most basic aqueous state.

**204** **EXEMPT COMPOUNDS -** For the purpose of this rule, the non-VOC, non-aqueous evaporating portion of a formulation; this necessarily includes all non-precursor organic compounds in addition to inorganic liquids and gases.

**205** **FREEBOARD HEIGHT -** The following measurement within the tank/basin of a cleaning machine, as determined during idling mode:

**205.1** **Batch:**

**a.** **Non-Vapor:** The vertical distance from the most elevated solvent surface to the least elevated point of the top-rim when the cover is open or removed.

**b.** **Vapor:** The vertical distance from the least elevated point of the top-rim to the point halfway between the highest and the lowest point of the cooling coils.

**205.2 In-line:**

**a.** **Non-vapor:** The vertical distance from the lowest entry/exit point to the most elevated solvent surface.

**b.** **Vapor:** The vertical distance from the lowest entry/exit point, to the point halfway between the highest and the lowest point of the cooling coils.

**206** **FREEBOARD RATIO -** The freeboard height divided by the smaller of the inside horizontal length or the inside horizontal width of the cleaning machine's evaporative surface area.

~~**207** **NON-PRECURSOR ORGANIC COMPOUND** - Any of the organic compounds which have been designated by the EPA as having negligible photochemical reactivity. EPA designates such compounds as "exempt". A listing of the compounds is found in Rule 100.~~

~~**208**~~**207** **PHOTORESIST OPERATION** - A process for the application and development of photoresist masking solution on a wafer, including preparation (except primary cleaning), soft bake, develop, hard bake, stripping, and edge-bead removal, and can be generally subdivided as follows:

~~**208.1**~~**207.1** **Negative Photoresist Operation:** A process where the maskant hardens when exposed to light or other process radiation, and the unhardened maskant is stripped, exposing the wafer surface for etching.

~~**208.2**~~**207.2** **Positive Photoresist Operation:** A process where the maskant softens when exposed to light or other process radiation, and the softened maskant is stripped, exposing the wafer surface for further processing.

~~**209**~~**208** **SOLVENT -** Any liquid or vapor which is used to dissolve, clean, strip, or remove impurities, coatings, contaminants, or films from surfaces or from internal spaces and voids. This includes, but is not limited to, developers and stripping agents.

~~**210**~~**209** **SOLVENT CLEANING STATION** - A workplace equipped to remove surface contaminants using a liquid or vapor solvent containing volatile organic compounds. This excludes photoresist stripping processes.

~~211~~210 **STRIPPING -** The removal of spent photoresist maskant from the product after etching, or the removal of oxide or other stencil agent from the product after diffusion, or any other removal of applied masking agent.

~~212~~211 **VOC CONTENT OF MATERIAL –** The weight of VOC per volume of material and can be calculated by:

Grams of VOC per Liter of Material = $$\frac{V_s - W_w - W_{es}}{V_m}$$

Where: $V_s$ = weight of all volatile compounds in grams, including water, exempt compounds, and dissolved vapors

$W_w$ = weight of water in grams

$W_{es}$ = total weight of all exempt compounds in grams

$V_m$ = volume of material in liters

~~213~~ ~~**VOLATILE ORGANIC COMPOUND (VOC)** - Any organic compound which participates in atmospheric photochemical reactions, except non-precursor organic compounds.~~

**SECTION 300 – STANDARDS**

**301 CONTROL OF PHOTORESIST OPERATIONS:** An owner or operator conducting photoresist operations at a semiconductor manufacturing facility that annually emits more than 25 tons (22.7 Mg) of VOC from all photoresist operations combined, measured prior to any emissions control, shall reduce photoresist VOC-emissions or aggregated VOC-emissions from both photoresist and cleaning-station processes using an ECS that satisfies the requirements set forth in either subsection 301.1 or 301.2 of this rule:

**301.1 Use An ECS To Control Photoresist VOC Only:**

**a.** Achieve at least 80% overall VOC-control of photoresist VOC, including capture and processing of photoresist VOC, as determined by applicable provisions in Section 503; or

**b.** The ECS shall capture at least 90% of all photoresist VOC and achieve an hourly average stack concentration not exceeding 20 mg VOC/standard cubic meter, as determined by applicable provisions in Section 503. Mass loading of VOC is expressed as milligrams of non-methane organic carbon.

**301.2 Use An ECS To Control Aggregated Photoresist VOC And Cleaning VOC:**

**a.** Achieve at least 80% overall VOC-control of aggregated cleaning plus photoresist VOC, including capture and processing, as determined by applicable provisions in Section 503; or

**b.** The ECS shall capture at least 90% of all cleaning and photoresist VOC emissions combined and achieve an hourly average stack concentration not exceeding 20 mg VOC/standard cubic meter, as determined by applicable provisions in Section 503. Mass loading of VOC is expressed as milligrams of non-methane organic carbon.

## 302 OPERATIONS USING SOLVENTS CONTAINING MORE THAN 10 PERCENT VOC:

**302.1 Solvent Cleaning Stations:** A person shall not operate a solvent cleaning station that cleans semi-conductor devices with solvents containing more than 10 percent VOC content unless each of the following requirements in subsections 302.1a through c are satisfied, or subsection 302.3 is satisfied.

**a.** Each heated or unheated reservoir, sink, and container that transfers, stores, or holds VOC-containing material shall be provided with a full cover. A cover shall remain closed except while production, sampling, maintenance, or loading or unloading procedures require operator access; and

**b.** All heated or unheated reservoirs and sinks holding VOC-containing materials with a total VOC vapor-pressure exceeding 33 mm Hg at 20°C (68°F) shall have a freeboard ratio greater than or equal to 1.0; and

**c.** Solvent flow of VOC-containing materials shall be applied in a continuous unbroken stream and in a manner which shall prevent liquid loss resulting from splashing.

**302.2 Cleanup Solvents:** A person shall not use a VOC-containing material for the purpose of cleaning semiconductor manufacturing equipment at a semiconductor manufacturing facility unless the requirements in at least one of the following subsections 302.2a through 302.2c are satisfied, or an ECS is used pursuant to subsection 302.3. This includes, but is not limited to, the cleaning of empty boats, quartz tubes, and other devices used to hold, contain, or process semiconductors.

**a.** The VOC content of the fluid does not exceed 200 grams per liter (1.7 pounds per gallon) of material; or

**b.** The VOC composite partial pressure does not exceed 33 mm Hg (0.64 psia) at a temperature of 20ºC (68ºF); or

**c.** The components being cleaned are totally enclosed during the washing, rinsing, and draining processes such that there are no greater than acceptable trace VOC emissions (ATVE) to the atmosphere during such processes. ATVE means that less than 50 ppm or 220 mg/M3 VOC is detected when determined according to subsection 503.5.

**302.3** **Alternative Compliance For Solvent Processes:** An owner or operator of an operation is allowed to meet any and all provisions under subsections 302.1 and 302.2 that apply to that operation by:

**a.** Using an ECS that achieves an overall control efficiency as required under Section 301 and that is operated pursuant to all applicable ECS requirements of this rule; or

**b.** Using an Air-tight or Airless system that both is sealed during cleaning and drying and has a sealed, self-contained liquid-solvent recovery system; or

**c.** Using only those materials in the operation that contain less than 100 g VOC/liter or no more than 10.0 percent VOC by weight.

**303 OPERATION AND MAINTENANCE (O&M) PLAN REQUIREMENTS FOR ECS:**

**303.1** An owner or operator of a facility shall provide and maintain, readily available on-site at all times, (an) O&M Plan(s) for any ECS, any other emission processing equipment, and any ECS monitoring devices that are used pursuant to this rule or to an air pollution control permit.

**303.2** The owner or operator of a facility shall submit to the Control Officer for approval the O&M Plans of each ECS and of each ECS monitoring device that is used pursuant to this rule.

**303.3** The owner or operator of a facility shall comply with all the identified actions and schedules provided in each O&M Plan.

**303.3** An owner or operator shall fully comply with each ECS O&M Plan that the owner or operator has submitted for approval, but which has not yet been approved, unless notified otherwise by the Control Officer in writing.

**304 OPERATE CORRECTLY:**

**304.1** **Process Equipment:** All active process equipment in which VOC-containing materials are used shall be operated and maintained in proper working order.

**304.2** **Leaks:** Liquids containing more than 0.2 percent VOC that leak at a rate of 3 drops per minute or more shall be repaired within 24 hours of detection, or the equipment shall be shut down until replaced or repaired according to the following schedule: Shut down prior to the next line shut down or within 24 hours of detection, whichever comes first.

**304.3** **Monitoring Devices:** Provide, properly install and maintain in calibration, in good working order, and in operation, devices for indicating or recording temperatures, pressures, rates of flow, concentrations or other operating parameters required by the O&M Plan for determining if air pollution control equipment or other means of control are functioning properly.

**305 STORAGE AND DISPOSAL OF VOC:**

**305.1** All storage of VOC-containing materials subject to evaporation, including the storage of waste solvent and waste solvent residues, shall at all times be in closed containers, except when contents are added or removed.

**305.2** Containers shall be legibly labeled with their contents.

**305.3** Disposal of waste or surplus VOC-containing materials shall be done in a manner that does not promote VOC evaporation, such as, but not limited to, via sewage treatment works or having the waste hauled off-site in sealed containers.

**306 EXEMPTIONS:**

**306.1** **Quality Control And R&D Operations:** Except for this rule's Sections 304 and 305 and subsections 502.1 and 502.2, this rule shall not apply to those operations within a semiconductor manufacturing facility which are used exclusively for one or more of the following: chemical or physical analysis, determination of product quality or commercial acceptance, research, or pilot plant activities. Such operations may be exempted until the sum of daily emissions from all such exempted operations reaches but does not exceed 40 pounds (18.1 kg). This exemption shall not apply to a particular operation if the exemption is denied in writing by the Control Officer.

**306.2** An aggregate of up to 55 gallons per year of material not exempted by other provisions within this Section 306 is exempt from the VOC-control requirements of Section 301 if usage is logged monthly in a coherent manner and cumulative usage is calculated.

**306.3 Low VOC Materials:** The following provisions apply to materials with a VOC content of 10% or less as received by a facility; VOC content shall be determined pursuant to Section 503. Percent is either by weight or volume, as chosen by the operator.

**a.** Materials with a VOC content of less than 2 grams VOC/liter or less than 0.2 percent VOC are exempt from Rule 338.

**b.** Materials with a VOC content of 0.2% to 10% VOC are exempt from Sections 301, 302, 303, 501, and 502 of this rule if the total quantity annually received is updated annually pursuant to subsection 502.2c, and disposal is done pursuant to all requirements within Section 305.

**306.4 Excepted Corrosive VOC:**

**a.** An excepted corrosive VOC is exempt from subsection 301.1 of this rule under the conditions in subsections (1) and (2) following:

**(1)** An owner or operator choosing the control option in subsection 301.1 is allowed to annually exempt an aggregated photoresist VOC total of up to 1 ton of excepted corrosive-VOC emissions from all control device and ECS requirements; and

**(2)** All excepted corrosive VOCs emitted in excess of the 1 ton (907.2 kg) per year aggregated allowance in 306.4a(1) are directed through a control device. No test of control efficiency shall be required for excepted corrosive organic compounds in a control device.

**(3)** All excepted corrosive VOCs emitted in excess of the 1 ton (907.2 kg) per year aggregated allowance in 306.4a(1) that are not directed through a control device are subject to Section 301 and subsection 301.1 as ordinary, non-exempt VOC.

**b.** An excepted corrosive VOC is exempt from subsection 301.2 of this rule under the conditions in subsections (1) and (2) following:

**(1)** An owner or operator choosing the control option in subsection 301.2 is allowed to annually exempt from all control device and ECS requirements 1 ton of excepted corrosive-VOC emissions aggregated from photoresist plus semiconductor cleaning; and

**(2)** All excepted corrosive VOCs emitted in excess of the 1 ton (907.2 kg) per year aggregated allowance in 306.4b(1) are directed through a control device. No test of control efficiency shall be required for excepted corrosive organic compounds in a control device.

**(3)** All excepted corrosive VOCs emitted in excess of the 1 ton (907.2 kg) per year aggregated allowance in 306.4b(1) that are not directed through a control device are subject to subsection 301.2 as ordinary, non-exempt VOC.

**306.5** **Organic Silicon Compounds:** VOC emissions up to an aggregated annual total of 1 ton of organic silanes and silicates, and any other organic compound of carbon and silicon, may be excluded by an owner or operator from being subject to the ECS control requirements of Section 301 if information from the manufacturer of the ECS indicates that such compounds adversely affect the operation of the model or type of ECS being used.

**306.6** **Wipe Cleaning:** Wipe cleaning is not subject to Section 300, but the usage of VOC-containing solvent for wipe cleaning is subject to the recordkeeping provisions of Section 500.

## SECTION 400 – ADMINISTRATIVE REQUIREMENTS

### 401 COMPLIANCE SCHEDULE:

**401.1** **Effective Date:** This revised version of Rule 338 becomes effective on June 1, 1999.

**401.2** **ECS Schedule:** Any owner or operator of a facility first becoming subject to the ECS requirements of Section 301 or Section 302 and intending to install and commence to use an ECS to comply with Section 301 or Section 302, shall submit for the Control Officer's approval an emission control plan describing the ECS by the first day of the 4th month after the month in which such facility becomes subject to the ECS requirement. The plan shall show how the ECS is to be used to achieve full compliance. The plan shall specify dates for completing increments of progress, such as the contractual arrival date of new control equipment. The Control Officer may require a person submitting such emission control plan to submit subsequent reports on progress in achieving compliance. Any and all ECS used to achieve such compliance shall be in operation by 15 months after the facility becomes subject to the ECS requirement.

**402** **CONTROL EFFICIENCY GENERALIZATION:** An owner or operator is allowed the following option:

**402.1** You may calculate the processing efficiency of an ECS processing subsystem, operated pursuant to subsection 301.1a, that also optionally controls other VOC in addition to photoresist VOC, by assuming the same percentage efficiency as was calculated from testing the efficiency of controlling all input VOC. For example, if the capture/collection subsystem blends 150 lbs per hour of photoresist VOC with 50 lbs per hour of etchant VOC, and if the processor simultaneously reduces the 150 lbs of photoresist VOC to 15 pounds of VOC and 50 pounds of etching VOC to 3 lbs of VOC, the processor will be credited with reducing the photoresist VOC by

$$91\% = 100\% \text{ x} \left[ 1 - \left( \frac{15+3}{150+50} \right) \right]; \text{ not } 90\%.$$

**402.2** In calculating the processing efficiency of an ECS processing subsystem operated pursuant to subsection 301.2a for an ECS that controls, in addition to cleaning and photoresist VOC, other VOC not addressed by subsection 301.2, it may be assumed that the ECS' efficiency for processing the aggregate of cleaning plus photoresist VOC is the same as that calculated from testing the efficiency of controlling all input VOC.

**403** **APPLICABILITY OF RULE 331 FOR SUPPORT OPERATIONS:** The solvent-cleaning of equipment or parts that is performed for purposes other than semiconductor manufacturing shall be subject to the solvent cleaning Rule 331 of these Air Pollution Control Rules and Regulations.

## SECTION 500 - MONITORING AND RECORDS

**501** **MONITORING DEVICE RECORDS:** Keep and maintain monitoring records as required by the O&M plan.

**502** **RECORDKEEPING AND REPORTING:** Any person subject to this rule shall comply with the following requirements. Records shall be retained for five years and shall be made available to the Control Officer upon request.

**502.1** **Current List:** Maintain a current list of materials used in the manufacture of semiconductors: coatings, adhesives, maskants, solvents, cleaning solutions, and any other VOC-containing materials. State the material VOC content of each in pounds per gallon, grams per liter, or as a weight percent (percent by mass) of the material.

**502.2** **Usage Records:**

**a.** Maintain monthly records showing the type and amount of all VOC-containing material used in semiconductor operations, except as modified by subsections b and

c following. This includes, but is not limited to, strippers, maskants, solvent materials and cleanup materials.

**b.** **Grouping By VOC Content:** For purposes of recording usage, those maskants, strippers, coatings, solvents or other VOC-containing materials that are of similar type and similar VOC content may be given a group name and recorded under that name. To the group name shall be assigned the highest VOC content among the members of that group, rounded to the nearest 10th of a pound per gallon, the nearest 1 g/L, or the nearest 1 percent. For each grouping, the name of each material in the group and its material VOC content must appear, along with the name of the grouping and its material VOC content.

**c.** Update annually the usage of materials having a VOC content of 10.0% or less. The results of an applicable test method, referred to in Section 504, or data supplied by the material's manufacturer suffices to demonstrate VOC content of material for this purpose. If there is a discrepancy between the manufacturer's formulation data and the results of an applicable test method, compliance shall be based on the results from the test method analysis.

**502.3 Records Of Disposal:**

**a.** The Control Officer may account as VOC emissions to the atmosphere such VOC as is not accounted for by an adequate demonstration of VOC recordkeeping.

**b.** Emission factors acceptable to the Control Officer are allowed to be used in calculating VOC emissions.

**502.4 ECS Recordkeeping:**

**a.** Make a continuous record of the times an ECS is used to comply with this rule.

**b.** Maintain records of the O&M Plan's key system operating parameters with the frequency required by the Plan.

**c.** Maintain records of all maintenance performed according to the O&M Plan.

**d.** An explanation shall be entered for scheduled maintenance that is not performed during the period designated in the O&M Plan.

**503** **COMPLIANCE DETERMINATION:** When more than one test method is permitted for a determination, an exceedance of the limits established in this rule determined by any of the applicable test methods constitutes a violation of this rule.

**503.1** **Sample Analysis:** The following test methods shall be used for determining VOC content. For routine information collection, the Control Officer may accept a manufacturer's data sheet (MSDS), data certified by an officer of the supplying company, or test data for the product model of inquiry.

**a.** VOC content of materials having more than 10% solids by volume shall be determined using the applicable EPA Reference Method 24 or 24A (40 CFR, Part 60, Appendix A).

**b.** The VOC content of solutions, dispersions, and emulsions that have no solids or less than 5% solids shall be determined by Method 31 of California's Bay Area Air Quality Management District (BAAQMD), or by California's South Coast Air Quality Management District Method (SCAQMD) 313-9.

**c.** Solids-free solutions, in which all organic components are VOCs, may be tested using Maricopa County Reference Method #100, "Total Organic Carbon for Windshield Washer Fluids", Maricopa County Air Pollution Control Rule 344 (April 7, 1999).

**d.** The VOC content of materials believed to have between 5 and 10% solids shall be determined by EPA Method 24, by BAAQMD Method 31, or by the SCAQMD Method 313-9.

**503.2** **Emission Testing:** An ECS used pursuant to Section 301 and/or Section 302 shall be tested using EPA Reference Test Methods 18 or 25, or an applicable submethod of such Test Methods. VOC emission shall be measured and calculated as carbon.

**503.3** **Capture Efficiency:** Capture efficiency of an emission control device used to meet the requirements of Section 301 or Section 302 shall be determined by mass balance in combination with ventilation/draft rate determinations done in accordance with subsection 503.4, or US EPA Test Methods 204, 204a, 204b, 204c, 204d, 204e, and 204f, Appendix M, 40 CFR 51. Verification that all active hoods and ducts, when measured at any selection of any interior place within them, are at negative pressure relative to adjacent, uncaptured air shall suffice for routine and uncontested demonstration of capture adequacy.

**503.4** **Ventilation/Draft Rates:** Ventilation/draft rates shall be determined by EPA Methods 2, 2A, 2C, or 2D.

**503.5** Determination of acceptable trace VOC-emission, with reference to subsection 302.2c, shall use a methane calibration standard. The detection instrument shall meet the requirements of EPA Test Method 21 (40 CFR 60). Use of the detection instrument shall generally meet the probe movement speed and probe orientation specifications of Method 21 for the exterior of piping, valves, tubing, connectors, and containers. Means other than described in Method 21 may be used for detector handling and positioning immediately above open liquids and within containers, ducts, and piping. A valid instrument reading under 50 ppm or 220 mg/M3 using a probe positioned closer than 1 inch also demonstrates acceptable trace VOC emission.

**503.6** **Formula For Total VOC Vapor-Pressure:** Equivalent to: **VOC Composite Partial Pressure,** with reference to Sections 301 and 302.

$$PP_c = \frac{\sum_{i=1}^{n} (W_i)(VP_i) / MW_i}{\frac{W_w}{18} + \sum_{i=1}^{m} \frac{W_{ej}}{MW_{ej}} + \sum_{i=1}^{n} \frac{W_i}{MW_i}}$$

| | | |
|---|---|---|
| $W_i$ | = | Weight of the "i"th VOC compound in grams |
| $W_w$ | = | Weight of water in grams |
| $W_{ej}$ | = | Weight of the "j"th exempt evaporating compound in grams |
| $MW_i$ | = | Molecular weight of the "i"th VOC compound in grams per gram mole, e.g., one gram-mole of isopropyl alcohol weighs 60 grams |
| $MW_{ej}$ | = | Molecular weight of the "j"th exempt evaporating compound, e.g., 1 gram-mole of acetone weighs 58 grams; 1 g-mole HCl =36.5 g |
| $PP_c$ | = | VOC composite partial pressure at 20°C in mm mercury (Hg) |
| $VP_i$ | = | Vapor pressure of the "i"th VOC compound at 20°C in mm Hg |
| 18 | = | Weight of one gram-mole of water |
| *n* | = | Total number of different (dissolved) VOCs |
| *m* | = | Total number of different (dissolved) exempt compounds |

**504** **TEST METHODS:** The EPA test methods as they exist in the Code of Federal Regulations (CFR) (July 1, 1998), as listed below, are adopted by reference. The other test methods listed here are also adopted by reference, each having paired with it a specific date that identifies the particular version/revision of the method that is adopted by reference. These adoptions by

reference include no future editions or amendments. Copies of test methods referenced in this Section 504 are available at the Maricopa County ~~Environmental Services~~ Air Quality Department, 1001 ~~North~~ N. Central ~~Avenue~~ Ave.~~, Suite 125,~~ Phoenix, AZ, 85004~~-1942~~.

**504.1 EPA Test Methods:**

**a.** EPA Methods 2 ("Determination of Stack Gas Velocity and Volumetric Flow Rate"), 2a ("Direct Measurement of Gas Volume Through Pipes and Small Ducts"), 2c ("Determination of Stack Gas Velocity and Volumetric Flow rate in Small Stacks or Ducts"), and 2d ("Measurement of Gas volumetric Flow Rates in Small Pipes and Ducts"). All 4 of the foregoing methods are in 40 CFR 60, Appendix A.

**b.** EPA Method 18 ("Measurement of Gaseous Organic Compound Emissions by Gas Chromatography") and its submethods (40 CFR 60, Appendix A).

**c.** EPA Test Method 21 ("Determination of Volatile Organic Compounds Leaks") (40 CFR 60, Appendix A).

**d.** EPA Test Method 24 ("Determination of Volatile Matter Content, Water Content, Density, Volume Solids, and Weight Solids of Surface Coatings") (40 CFR 60, Appendix A).

**e.** EPA Method 25 ("Determination of Total Gaseous Nonmethane Organic Emissions as Carbon") and its submethods (40 CFR 60, Appendix A).

**f.** EPA Test Method 204("Criteria For and Verification Of a Permanent or Temporary Total Enclosure"), and related Methods 204a, 204b, 204c, 204d, 204e, and 204f (Appendix M, 40 CFR 51).

**504.2 Other (Non-EPA) Test Methods:**

**a.** California's Bay Area Air Quality Management District (BAAQMD) Method 31 (April 15, 1992), "Determination of Volatile Organic Compounds in Paint Strippers, Solvent Cleaners, and Low Solids Coatings".

**b.** California's South Coast Air Quality Management District (SCAQMD) Method 313-91 (April, 1997).

## REGULATION III - CONTROL OF AIR CONTAMINANTS

## RULE 339

**VEGETABLE OIL EXTRACTION PROCESSES**

**INDEX**

**SECTION 100 – GENERAL**

101 PURPOSE

102 APPLICABILITY

**SECTION 200 – DEFINITIONS**

201 APPROVED EMISSION CONTROL SYSTEM

202 CONVEYOR

203 COOLER

204 DESOLVENTIZER-TOASTER (D-T)

205 EQUIPMENT IN SOLVENT SERVICE

206 EXTRACTOR

207 LEAK

208 MEAL

209 MINERAL-OIL SCRUBBER

210 SOLVENT

211 SOLVENT EXTRACTION

212 VEGETABLE OIL PLANT

~~213 VOLATILE ORGANIC COMPOUND (VOC)~~

**SECTION 300 – STANDARDS**

301 LIMITATION - VOC EMISSIONS

302 EXTRACTORS AND DESOLVENTIZER-TOASTERS

303 DESOLVENTIZER-TOASTER CONVEYOR

304 OPERATION AND MAINTENANCE PLAN

305 EQUIPMENT IN SOLVENT SERVICE

306 EXEMPTIONS

**SECTION 400 – ADMINISTRATIVE REQUIREMENTS**

401 COMPLIANCE SCHEDULE

**SECTION 500 - MONITORING AND RECORDS**

501 PROVIDING AND MAINTAINING MONITORING DEVICES

502 RECORDKEEPING AND REPORTING

503 RECORDS RETENTION

504 COMPLIANCE DETERMINATION - TEST METHODS

**Adopted 11/16/92**

**Revised 09/25/13**

**MARICOPA COUNTY**

**AIR POLLUTION CONTROL REGULATIONS**

**REGULATION III - CONTROL OF AIR CONTAMINANTS**

**RULE 339**

**VEGETABLE OIL EXTRACTION PROCESSES**

**SECTION 100 – GENERAL**

**101** **PURPOSE:** To limit the emissions of volatile organic compounds (VOCs) from the extraction of vegetable oil using solvents.

**102** **APPLICABILITY:** This rule applies to any vegetable oil extraction facility which has emitted 600 pounds (272 kg) or more of VOC in a day or 100 tons (90.7 Mg) or more of VOC in a year, or which would emit at such levels in the absence of existing VOC control measures, or reasonably could be expected to emit at such levels at current or proposed production rates.

**SECTION 200 – DEFINITIONS:** For the purpose of this rule, the following definitions shall apply~~:~~, in addition to those definitions found in Rule 100 (General Provisions and Definitions) of these rules. In the event of any inconsistency between any of the Maricopa County air pollution control rules, the definitions in this rule take precedence.

**201** **APPROVED EMISSION CONTROL SYSTEM -** A system for reducing emissions of organic compounds, consisting of both collection and control devices which are approved in writing by the Control Officer and are designed and operated in accordance with good engineering practice.

**202** **CONVEYOR -** Any device which moves material from one location to another location.

**203** **COOLER -** A device which reduces the temperature and/or moisture from meal being processed.

**204** **DESOLVENTIZER-TOASTER (D-T) -** A heated process unit in which air and/or steam are applied to solvated vegetable matter to volatilize the extraction solvent.

**205** **EQUIPMENT IN SOLVENT SERVICE -** Any pump, valve, pressure relief valve, sight glass, sample connection, open-ended valve, connector, or other component which handles extraction solvent or material containing such solvent.

**206** **EXTRACTOR-** Equipment which removes vegetable oil from vegetable material through the use of solvent.

**207** **LEAK -** Any dripping or indication of dripping of liquid from equipment in solvent service, or an emission of gaseous VOC which exceeds 10,000 ppm (expressed as methane) above background when measurements are made using EPA Method 21.

**208** **MEAL -** Pulverized vegetable matter from which oil has been extracted and which might still contain some extraction solvent.

**209** **MINERAL-OIL SCRUBBER -** A packed tower which uses mineral oil as a sorbent for the extraction solvent.

**210** **SOLVENT -** The extraction medium used to extract oil from seeds, beans or other vegetable matter.

**211** **SOLVENT EXTRACTION -** Removal of vegetable oil from vegetable matter using a liquid solvent in a contact system to dissolve and suspend the oil.

**212** **VEGETABLE OIL PLANT -** Any facility or section of a facility engaged in the extraction or refining of vegetable oil through the use of solvent.

**Note1**[3] ~~**213** **VOLATILE ORGANIC COMPOUND (VOC)** - Any organic compound, excluding the following organic compounds which have been designated by the EPA as having negligible photochemical reactivity.: methane; ethane; methylene chloride (dichloromethane); 1,1,1−trichloroethane; trichlorofluoromethane (CFC−11); dichlordifluoromethane (CFC−12); chlorodifluoromethane (CFC−22); 1,1,2−trichlorotrifluoroethane (CFC−113); 1,2−dichlorotetrafluoroethane (CFC−114); chloropentafluoroethane (CFC−115); trifluoromethane (FC−23); 2,2−dichloro-1,1,1−trifluoroethane (HCFC−123); 2−chloro-1,1,1,2−tetrafluoroethane (HCFC−124); 1,1−dichloro-1−fluoroethane (HCFC−141b); 1−chloro-1,1−difluoroethane (HCFC−142b); pentafluoroethane (HFC−125); 1,1,2,2−tetrafluoroethane (HFC−134); 1,1,1,2−tetrafluoroethane (HFC−134a); 1,1,1−trifluoroethane (HFC−143a); 1,1−difluoroethane (HFC−152a); all completely fluorinated, completely saturated: alkanes, ethers and tertiary amines.~~

**SECTION 300 - STANDARDS**

**301** **LIMITATION - VOC EMISSIONS:** No person shall operate a vegetable oil extraction plant or facility unless the emissions do not exceed either of the following:

[3] ~~1 This note is not part of Rule 339, but is included for the reader's convenience. The current list of exempt organic compounds is in Rule 100, Section 200, in the definition of Non-Precursor organic Compound~~

**301.1** 2.5 pounds of VOC per ton of processed seed (1.13 kg/Mg) for any 30 consecutive days of operation; and

**301.2** 3.0 pounds of VOC per ton of processed seed (1.36 kg/Mg) for any seven consecutive days of operation.

**302** **EXTRACTORS AND DESOLVENTIZER-TOASTERS:** No person shall operate any extractor or desolventizer-toaster unless VOC emissions are controlled by both a condenser and a mineral-oil scrubber. Such scrubber shall have an overall VOC-control efficiency (capture with processing) of at least 90 percent by weight.

**303** **DESOLVENTIZER-TOASTER CONVEYOR:** No person shall operate a vegetable oil plant unless the desolventizer-toaster discharge conveyor is vented to a mineral oil scrubber having an overall VOC-control efficiency (capture with processing) of at least 90 percent by weight.

**304** **OPERATION AND MAINTENANCE PLAN:** Owners or operators shall provide the Control Officer with an Operation and Maintenance (O&M) Plan. This Plan shall specify key system operating parameters, such as temperatures, pressures and/or flow rates, necessary to determine compliance with this rule and describe in detail procedures to maintain the Approved Emission Control System. The Control Officer's written approval of this plan shall be required for compliance with this rule to be achieved.

**305** **EQUIPMENT IN SOLVENT SERVICE:** The owner or operator of a vegetable oil extraction plant shall inspect at least once a month all equipment in solvent service for any indication of VOC leakage in accordance with EPA Method 21. If the detected gaseous leakage level exceeds 10,000 ppm (expressed as methane) or if leak(s) are visible, the leak shall be tagged with a weatherproof tag. The date and time of the leak's discovery shall be recorded in a permanent logbook. The operator shall attempt to repair such leak(s) as soon as possible. The operator shall notify the Control Officer by the Division's next working day of leak(s) which cannot be fixed within 24 hours of discovery. No leak shall remain unrepaired by the end of any plant shutdown.

~~**Note2**~~[4]

**306** **EXEMPTIONS:** In determining compliance with subsection 301.2 of this rule, the Division shall exclude from calculations a startup day and the VOC added on that day, subsequent to purging the extractor and/or the refinery of all solvent.

**SECTION 400 – ADMINISTRATIVE <u>REQUIREMENTS</u>**

---

~~4 This note is not part of Rule 339, but is provided as a convenience to the reader. What is referred to as "the Division" is, in 1997, the Maricopa County Environmental Services Department.~~

**401** **COMPLIANCE SCHEDULE:** By February 14, 1993, any person subject to Section 301, 302, or 303, who does not comply with all provisions of said section(s) shall submit to the Control Officer for approval an emission control plan describing the method to be used to achieve full compliance by November 15, 1993. The plan shall specify dates for completing increments of progress, such as the contractual arrival date of new control equipment. The Control Officer may require a person submitting such emission control plan to submit subsequent reports on progress in achieving compliance.

## SECTION 500 - MONITORING AND RECORDS

**501** **PROVIDING AND MAINTAINING MONITORING DEVICES:** Any person sorbing or otherwise processing VOC emissions to reduce them pursuant to this rule, shall provide, properly install and maintain in calibration, in good working order and in operation, devices described in an approved O&M Plan for indicating temperatures, pressures, rates of flow, or other operating conditions necessary to determine if air pollution control equipment is functioning properly and is properly maintained.

**502** **RECORDKEEPING AND REPORTING:** Any person subject to this rule shall comply with the following requirements. Any records and lists required by this section shall be kept in a consistent and complete manner.

**502.1** **Material Usage:** Maintain a current list of solvents, mineral oil and any other VOC-containing materials such as paints and cleaning liquids which annually exceed 20 gallons and state the VOC content of each in pounds per gallon or grams per liter. Daily record the amount of makeup solvent, the tons of vegetable matter subject to extraction, the amount of vegetable oil produced, and amount of mineral oil added.

**502.2** **Operation and Maintenance:** Maintain a record of the times an Approved Emission Control Device is used to comply with this rule. Maintain daily records of the O&M Plan's key system operating-parameters. Maintain records of all maintenance performed according to the O&M Plan.

**502.3** **Calculations:** By the end of each day-shift, calculate both the seven-day and the thirty-day rolling averages yielding daily VOC-consumption figures, using data gathered up to and including the previous shift.

**502.4** **Logbook:** A permanent logbook shall be kept of dates, times, and locations of all: leak-detection activities, leaks found, leaks repaired, shutdowns and startups. During operating hours the logbook, as well as entries required under the preceding subsections 502.1,

502.2 and 502.3, shall immediately be made available to the Control Officer upon request.

**503** **RECORDS RETENTION:** Copies of reports and supporting documentation required by the Control Officer shall be retained at least three years after the date of submittal. Records and information required by this rule shall be retained for at least three years.

**504** **COMPLIANCE DETERMINATION - TEST METHODS:** An exceedance of the limits established in the rule determined by any of the applicable test methods constitutes a violation of this rule.

**504.1** Control efficiency of an emissions control device shall be determined according to EPA Reference Method 25 or its applicable submethods, Title 40, CFR Part 60, Appendix A.

**504.2** Gaseous leaks shall be tested for using EPA Method 21.

~~Last Formatted - Fall 1997~~

## REGULATION III - CONTROL OF AIR CONTAMINANTS

## RULE 340
## CUTBACK AND EMULSIFIED ASPHALT

### INDEX

**SECTION 100 – GENERAL**

101 PURPOSE

102 APPLICABILITY

**SECTION 200 – DEFINITIONS**

201 ASPHALT CEMENT

202 ASPHALT RUBBER

203 BITUMEN

204 CUTBACK ASPHALT

205 CUTBACK TAR

206 DUST PALLIATIVE

207 EMULSIFIED ASPHALT/EMULSIFIED TAR

208 MEDIUM CURE CUTBACK ASPHALT

209 PENETRATING PRIME COAT

210 RAPID CURE CUTBACK ASPHALT

211 SOLVENT-VOC

212 TACK COAT

213 TAR

~~214 VOLATILE ORGANIC COMPOUND (VOC)~~

**SECTION 300 – STANDARDS**

301 LIMITATIONS

302 EXEMPTIONS

303 LABELING REQUIREMENT

**SECTION 400 - ADMINISTRATIVE REQUIREMENTS (NOT ~~INCLUDED~~ APPLICABLE)**

**SECTION 500 - MONITORING AND RECORDS**

501 RECORDKEEPING AND REPORTING

502 COMPLIANCE DETERMINATION - TEST METHODS

**Revised 07/13/88**

**Revised 06/22/92**

**Revised 09/21/92**

**Revised 09/25/13**

**MARICOPA COUNTY**

**AIR POLLUTION CONTROL REGULATIONS**

**REGULATION III - CONTROL OF AIR CONTAMINANTS**

**RULE 340**

**CUTBACK AND EMULSIFIED ASPHALT**

**SECTION 100 – GENERAL**

**101** **PURPOSE:** To limit emissions of volatile organic compounds (VOCs) from the use of cutback and emulsified asphalt and other bitumens.

**102** **APPLICABILITY:** The provisions of this rule apply to the use and application of cutback and emulsified asphalt or tar materials for the paving, construction or maintenance of highways, streets, roads, parking lots, and driveways, and to the application of such materials onto soil and earthworks.

**SECTION 200 – DEFINITIONS:** For the purpose of this rule, the following definitions shall apply~~:~~, in addition to those definitions found in Rule 100 (General Provisions and Definitions) of these rules. In the event of any

inconsistency between any of the Maricopa County air pollution control rules, the definitions in this rule take precedence.

**201** **ASPHALT CEMENT -** The dark brown to black cementitious material (solid, semisolid, or liquid in consistency), of which the main constituents are naturally occurring bitumens or bitumens resulting from petroleum refining.

**202** **ASPHALT RUBBER -** An asphaltic binder made with asphalt cement and at least three percent of ground tire rubber by weight.

**203** **BITUMEN -** A class of black or dark-colored (solid, semi-solid or viscous) cementitious substances, natural or manufactured, composed principally of high molecular weight hydrocarbons, of which asphalts, tars, pitches and asphaltites are typical.

**204** **CUTBACK ASPHALT -** An asphalt cement liquified with any solvent-VOC.

**205** **CUTBACK TAR -** A tar liquified with any solvent-VOC.

**206** **DUST PALLIATIVE -** A light application of cutback or emulsified asphalt for controlling loose dust.

**207** **EMULSIFIED ASPHALT/EMULSIFIED TAR -** Any liquified asphalt or tar produced by dispersing asphalt cement or tar into water by means of high speed agitation and an emulsifying agent.

**208** **MEDIUM CURE CUTBACK ASPHALT -** A cutback asphalt which meets ASTM specification D 2027.

**209** **PENETRATING PRIME COAT -** The low viscosity liquid asphalt or tar applied to a relatively absorbent surface to prepare it for new superimposed construction. Prime coats do not include dust palliatives or tack coats.

**210** **RAPID CURE CUTBACK ASPHALT -** A cutback asphalt which falls generally within the specifications of ASTM designation D 2028-76 and which generally cures more quickly than medium cure cutback asphalt.

**211** **SOLVENT-VOC -** For the purposes of this rule, any volatile organic compound which is used with an asphalt or tar to give fluidity and other desired properties and which volatilizes at 500°F (260°C) or less.

**212** **TACK COAT -** An application of liquified asphalt to an existing, relatively nonabsorbent surface to provide a thorough bond between that surface and the superimposed layer.

**213** **TAR -** For the purposes of this rule, any non-asphalt bitumen. This includes road tar produced by distilling coal tar or blending coal-tar pitch with lighter coal-tar fractions.

~~**Note1**[5] **214** **VOLATILE ORGANIC COMPOUND (VOC)** - Any organic compound, excluding the following organic compounds which have been designated by the EPA as having negligible photochemical reactivity.: methane; ethane; methylene chloride (dichloromethane); 1,1,1−trichloroethane; trichlorofluoromethane (CFC−11); dichlorodifluoromethane (CFC−12); chlorodifluoromethane (CFC−22); 1,1,2−trichlorotrifluoroethane (CFC−113); 1,2−dichlorotetrafluoroethane (CFC−114); chloropentafluoroethane (CFC−115); trifluoromethane (FC−23); 2,2−dichloro-1,1,1−trifluoroethane (HCFC−123); 2−chloro-1,1,1,2−tetrafluoroethane (HCFC−124); 1,1−dichloro-1−fluoroethane (HCFC−141b); 1−chloro-1,1−difluoroethane (HCFC−142b); pentafluoroethane (HFC−125); 1,1,2,2−tetrafluoroethane (HFC−134); 1,1,1,2−tetrafluoroethane (HFC−134a); 1,1,1−trifluoroethane (HFC−143a); 1,1−difluoroethane (HFC−152a); all completely fluorinated, completely saturated: alkanes, ethers and tertiary amines.~~

**SECTION 300 - STANDARDS**

**301** **LIMITATIONS:** No person shall sell, offer for sale, use or apply the following materials for paving, construction, or maintenance of highways, streets, driveways, parking lots or for any other use to which this rule applies:

**301.1** Rapid cure cutback asphalt.

**301.2** Any cutback asphalt material, road oils, or tar which contains more than 0.5 percent by volume VOCs which evaporate at 500°F (260°C) or less using ASTM Test Method D 402-76.

**301.3** Any emulsified asphalt or emulsified tar containing more than 3.0 percent by volume VOCs which evaporate at 500°F (260°C) or less as determined by ASTM Method D 244-89.

**302** **EXEMPTIONS:** The provisions of this rule shall not apply to:

**302.1** Asphalt that is used solely as a penetrating prime coat and which is not a rapid cure cutback asphalt. Penetrating prime coats do not include dust palliatives or tack coats.

---

~~5 This note is not part of Rule 340, but is provided as a convenience to the reader. The current list of exempted organic compounds is in Rule 100, Section 200, in the definition of Non-Precursor Organic Compound.~~

**302.2** Any asphalt/bituminous material sold in Maricopa County for shipment and use outside Maricopa County if the person claiming such exemption clearly labels each container of materials entitled to such exemption or upon request (during normal business hours) immediately provides the Control Officer with shipping records demonstrating the asphalt material is not for use within Maricopa County.

**302.3** A person may use up to 3.0 percent solvent-VOC by volume for batches of asphalt rubber which cannot meet paving specifications by adding heat alone only if request is made to the Control Officer, who shall evaluate such requests on a case-by-case basis. The Control Officer shall not approve such requests unless complete records are kept and full information is supplied including savings realized by using discarded tires. The Control Officer shall not approve such requests when it would cause a person to exceed 1100 lbs (500 kg) usage of solvent-VOC in asphalt rubber in a calendar year unless the applicant can demonstrate that in the previous 12 months no solvent-VOC has been added to at least 95 percent by weight of all the asphalt rubber binder made by the person or caused to be made for the person. This subsection (302.3) does not apply to batches which yield 0.5 percent or less solvent-VOC evaporated using the test in subsection 502.1.

**303** **LABELING REQUIREMENT:** On or after December 22, 1992, no person shall sell, offer for sale, manufacture or store for sale or for use within Maricopa County any emulsified or cutback asphalt product which contains more than 0.5 percent by volume solvent-VOC unless such material lot includes a designation of solvent-VOC content on data sheet(s) expressed in percent solvent-VOC by volume.

**SECTION 400 - ADMINISTRATIVE REQUIREMENTS (NOT ~~INCLUDED~~ APPLICABLE)**

**SECTION 500 - MONITORING AND RECORDS**

**501** **RECORDKEEPING AND REPORTING:** The owner or operator of any facility subject to this rule which manufactures, mixes, stores, ships, uses or applies any asphaltic/bituminous material containing more than 0.5 percent by volume solvent-VOC shall keep daily records of the amount and type received, used and shipped, as well as the solvent-VOC content of this material. Safety data (MSDS) or technical data sheets shall be kept available. These records must be maintained in a readily accessible location for a minimum of three years and must be made available to the Control Officer upon verbal or written request.

**502** **COMPLIANCE DETERMINATION - TEST METHODS:**

**502.1** Solvent-VOC content of non-emulsified asphalts and tars shall be determined by American Society for Testing and Materials (ASTM) Method D 402-76. For the purposes of this rule, the end point of the distillation shall be at 500°F (260°C).

**502.2** Solvent-VOC content of emulsified asphalts and tars shall be determined using ASTM Method D 244-89. The end point of the distillation shall be at 500°F (260°C).

**502.3** Measurement of exempt compound content in cutback and emulsified asphalts shall be conducted and reported in accordance with ASTM Test Method D 4457-85.

**502.4** Tests to assist in determining the solvent-VOC content of the asphaltic binder of an asphaltic concrete are: ASTM Method D 2172 "Test For Quantitative Extraction of Bitumen From Bituminous Paving Mixtures" and ASTM Method D 1856 "Test for Recovery of Asphalt from Solution by Abson Method."

~~Last Formatted - Fall 1997~~

## REGULATION III - CONTROL OF AIR CONTAMINANTS

## RULE 341
## METAL INVESTMENT CASTING

### INDEX


**SECTION 100 – GENERAL**

101 PURPOSE
102 APPLICABILITY

**SECTION 200 – DEFINITIONS**

201 BINDER
202 BINDER VOC CONTENT
203 BINDER-VOC EMISSIONS
204 BURNOUT
205 BURNOUT CYCLE
206 DAY
207 EMISSION CONTROL SYSTEM (ECS)
208 INVESTMENT CASTING
209 KILN
~~210 NON-PRECURSOR ORGANIC COMPOUND~~
~~211 VOLATILE ORGANIC COMPOUND (VOC)~~

**SECTION 300 – STANDARDS**

301 CONTROLS REQUIRED

302 MAINTENANCE

303 STORAGE AND DISPOSAL OF VOC

304 REQUIREMENTS FOR AIR POLLUTION CONTROL EQUIPMENT

**SECTION 400 - ADMINISTRATIVE REQUIREMENTS ~~(RESERVED)~~ (NOT APPLICABLE)**

**SECTION 500 - MONITORING AND RECORDS**

501 ECS USE

502 RECORDKEEPING AND REPORTING

503 COMPLIANCE DETERMINATION - TEST METHODS

504 AVERAGING

**08/02/93**

**Revised 08/05/94**

**Revised 12/16/98**

**Revised 09/25/13**

**MARICOPA COUNTY**

**AIR POLLUTION CONTROL REGULATIONS**

**REGULATION III - CONTROL OF AIR CONTAMINANTS**

**RULE 341**

**METAL INVESTMENT CASTING**

**SECTION 100 – GENERAL**

**101** **PURPOSE:** To limit the amount of volatile organic compounds (VOCs) emitted by metal investment casting facilities.

**102** **APPLICABILITY:** This rule applies to any metal investment casting facility.

**SECTION 200 – DEFINITIONS:** For the purpose of this rule, the following definitions shall apply~~:~~, in addition to those definitions found in Rule 100 (General Provisions and Definitions) of these rules. In the event of any inconsistency between any of the Maricopa County air pollution control rules, the definitions in this rule take precedence.

**201** **BINDER -** Any material which is used to bind casting sand or other refractory particles into a cohesive mold or part of a mold.

**202 BINDER VOC CONTENT -**

$$\text{VOC Content of a Binder} = \frac{W_s - W_w - W_{es}}{V_m - V_w - V_{es}}$$

Using consistently either English or metric measures in the calculations

Where:

$W_s$ = weight of all volatile material in the binder, in pounds (or grams), including VOC, water, non-precursor organic compounds and dissolved vapors.

$W_w$ = weight of water in pounds (or grams)

$W_{es}$ = weight of all non-precursor compounds in pounds (or grams)

$V_m$ = volume of total binder material including suspended binder-solids, in gallons (or liters)

$V_w$ = volume of water in gallons (or liters)

$V_{es}$ = volume of all non-precursor compounds in gallons (or liters)

**203 BINDER-VOC EMISSIONS -** VOC emissions from binder operations which include, but are not limited to, VOC that is emitted during binder formulation and mixing at the casting facility, binder setting, cold-box gassing, metal pouring, mold burnout, mold cooling, mold storage, and binder/sand recycling. This also includes VOC released through thermal vaporization, combustion, and pyrolysis of binder material.

**204 BURNOUT -** Firing a mold in a kiln to burn out any remaining fusible-model material and to cure the mold.

**205 BURNOUT CYCLE -** One of the following:

**205.1 Into Heated Kiln:** The period between introducing the first mold of a batch of molds into an actively heated kiln until the withdrawal of the last mold of the batch or until the time the cooling kiln reaches 199°F, whichever happens first.

**205.2 Into Cool Kiln:** For a batch of molds introduced into a cool kiln, the period from the time the kiln reaches 200° F until either the time the last mold of that batch is withdrawn or the time the cooling kiln reaches 199°F, whichever happens first.

**206 DAY -** A period of 24 consecutive hours beginning at midnight.

**207 EMISSION CONTROL SYSTEM (ECS) -** A system, approved in writing by the Control Officer, designed and operated in accordance with good engineering practice to reduce emissions of volatile organic compounds. Such system consists of an emissions collection subsystem and an emissions processing subsystem.

**208** **INVESTMENT CASTING -** A type of metal casting in which a mold is built up around a fusible model (typically wax), using refractory particles and binder. The model is then melted out and the mold is cured, usually at high temperatures, before casting metal is introduced into the mold.

**209** **KILN -** The oven, retort, or furnace in which molds are fired or cured prior to their receiving molten metal.

~~**210** **NON-PRECURSOR ORGANIC COMPOUND** - Any of the organic compounds which have been designated by the EPA as having negligible photochemical reactivity. EPA designates such compounds as "exempt". A listing of the compounds is found in Rule 100 of these Air Pollution Control Rules and Regulations.~~

~~**211** **VOLATILE ORGANIC COMPOUND (VOC)** - Any organic compound that participates in photochemical reactions, except non-precursor organic compounds.~~

**SECTION 300 - STANDARDS**

**301** **CONTROLS REQUIRED:** After December 16, 1998, no person shall operate a metal investment casting facility emitting, prior to any control device, more than 150 lbs (68 kg) of VOC per day or more than 25 tons (22.7 mg) of VOC per year from investment casting operations unless VOC emissions are controlled by applicable methods in subsections 301.1 and 301.2. VOC emissions from testing, processing, and cleaning procedures that are part of the manufacturing of investment-cast products are included in calculating total emissions.

**301.1** **VOC Emission From Binders Prior To Burnout**:

**a.** Use an Emission Control System which, through the capture and processing of emissions, reduces the total, facility-wide binder-VOC emissions, prior to mold burnout whenever there are pre-burnout binder-VOC emissions, by using one of the following measures:

**(1)** Reduce VOC emissions by at least 85 percent as determined by the test methods referred to in Section 503 of this rule; or

**(2)** Use a capture subsystem with an overall capture efficiency of at least 90%, and a processing subsystem that emits no more than 20 mg VOC as organic carbon per standard cubic meter, corrected to 7.0% oxygen for oxidizing systems in accordance with the instructions in subsection 503.5; or

**b.** Maintain a limit to binder VOC content of 420 grams VOC per liter(3.5 lb/gal) of binder, less water and non-precursor organic compounds, as determined by methods referred to in Section 503 of this rule; or

**c.** Maintain a daily-weighted average not exceeding 420 grams VOC per liter (3.5 lb/gal) of binder, less water and non-precursor organic compounds, using calculations specified in Section 504 of this Rule 341.

**301.2** **Burnout VOC-Emissions:** VOC emissions from a burnout operation in a kiln shall be controlled by a VOC control system or device that meets all the provisions of either subsection 301.2a or subsection 301.2b, as applicable.

**a.** **Kilns installed prior to July 3, 1998:** An owner or operator of a VOC control device serving a kiln for which installation was begun before July 3, 1998, shall:

**(1)** Operate the device so as to process VOC emissions either:

**(a)** With a reduction-efficiency of at least 90% as determined by the test methods referred to in Section 503, or

**(b)** Process the emissions sufficiently that the average emission during each burnout cycle is less than 30 milligrams of VOC (measured as organic carbon) per standard cubic meter of emissions (as determined by the test methods referred to in Section 503). Results shall be corrected to 7.0% oxygen for oxidizing systems in accordance with the instructions in subsection 503.5.

**(2)** During burnout, follow the O&M Plan procedures for proper positioning of the kiln access door, if open, and consistently comply with any other key operating parameters in the Plan.

**b.** **Kilns installed on or after July 3, 1998:** An owner or operator of a kiln of which installation was begun on or after July 3, 1998, shall:

**(1)** Operate the device so as to process VOC emissions either:

**(a)** With an efficiency of at least 90% as determined by the test methods referred to in Section 503, or

**(b)** Process emissions such that the average emission during each burnout cycle is less than 20 milligrams of VOC (measured as organic carbon) per

standard cubic meter of emissions (as determined by the test methods referred to in Section 503). Results shall be corrected to 7.0% oxygen for oxidizing systems in accordance with the instructions in subsection 503.5.

**(2)** Provide that the kiln has systems/devices sufficiently effective and of such a design that the door of the kiln does not need to be opened to regulate emissions during the burnout period.

**(3)** The kiln door shall be kept closed after the last unfired mold of a batch is placed in the kiln, except for checking or action on the kiln's contents. The kiln door shall be closed immediately upon completion of checking or action.

**(4)** Consult the O&M Plan if, during burnout, there is visible emission from the kiln.

**301.3** **Alternative Threshold:** The threshold of 150 pounds per day of total VOC from all investment casting operations in Section 301 is raised to 160 pounds per day for a facility to which the following apply:

**a.** The 160 lb/day threshold is made a part of the facility's Air Pollution Permit; and

**b.** The facility makes molds and/or conducts mold burnout no more than 6 days per week, or

**c.** The facility makes molds and/or conducts mold burnout no more than 313 days per year.

**302** **MAINTENANCE:** Any person subject to this rule shall operate and maintain in proper working order all process equipment in which VOC-containing materials are used or stored.

**303** **STORAGE AND DISPOSAL OF VOC:** An owner or operator shall comply with the following provisions:

**303.1** Store all VOC-emitting materials, including but not limited to waste binders, waste solvents, and their residues, in closed containers which are legibly labeled with their contents.

**303.2** Use suitable disposal methods. Suitable disposal includes legal deposit into sewers, laundering of wiping materials, collection in closed containers (including impervious bags), and removal by a disposal service.

**303.3** Choose one of the following:

**a.** Keep adequate records of the disposal/recovery of each VOC-containing material; or

**b.** If adequate records of the disposal/recovery of a VOC-containing material are not kept, it is the option of the Control Officer to count as emission to the air the VOC contained in that material, as determined from records of the material's usage.

**304 REQUIREMENTS FOR AIR POLLUTION CONTROL EQUIPMENT**

**304.1 Operation and Maintenance (O&M) Plan Required for ECS:**

**a.** An owner or operator shall provide and maintain (an) O&M Plan(s) for any ECS, any other emission processing equipment, and any ECS monitoring devices that are used pursuant to this Rule 341 or to an air pollution control permit.

**b.** The owner or operator shall submit to the Control Officer for approval the O&M Plans of each ECS and each ECS monitoring device that is used pursuant to this Rule 341.

**c.** The owner or operator shall comply with all the identified actions and schedules provided in each O&M Plan.

**304.2 Providing And Maintaining ECS Monitoring Devices:** Any person incinerating, adsorbing, or otherwise processing VOC emissions pursuant to this rule shall provide, properly install and maintain in calibration, in good working order and in operation, devices described in the facility's O&M Plan that indicate temperatures, pressures, rates of flow, or other operating conditions necessary to determine if air pollution control equipment is functioning properly and is properly maintained.

**304.3 O&M Plan Responsibility:** An owner or operator of a facility that is required to have an O&M Plan pursuant to subsection 304.1 must fully comply with all O&M Plans that the owner or operator has submitted for approval, but which have not yet been approved, unless notified otherwise by the Control Officer in writing.

**SECTION 400 - ADMINISTRATIVE REQUIREMENTS ~~(RESERVED)~~ (NOT APPLICABLE)**

**SECTION 500 - MONITORING AND RECORDS**

**501 ECS USE:**

**501.1** On each day an Emission Control System is operated pursuant to this rule, a continuous, permanent record shall be maintained both of the times such system was used to comply with this rule and of the amount and VOC-content of each binder controlled by the ECS.

**501.2 Operation and Maintenance:**

**a.** On each day that an Emission Control System is used to comply with this rule, a record shall be made of the operating parameters of the key systems described in the O&M Plan.

**b.** For each day or period in which the O&M Plan requires that maintenance be performed, a record shall be made of the maintenance actions taken, within 24 hours of maintenance completion.

**c.** An explanation shall be entered for scheduled maintenance that is not performed during the period designated in the O&M Plan.

**502 RECORDKEEPING AND REPORTING:** An owner or operator subject to this rule shall keep the following records and lists in a consistent and complete manner, and shall make them available to the Control Officer upon request. Records of the previous 12 months, requested during normal business hours, shall be made available without delay. Each of the following records shall be maintained for a minimum of five years:

**502.1 Current List:** A current list shall be maintained of all VOC-containing materials as received by the facility, such as binders and/or binder components, maskants, coatings, cleaning solvents, lubricants and any other VOC-containing substances related to investment casting. Include the VOC content of each in pounds per gallon or grams per liter.

**a. Type of material:** The listing for each material shall also include a brief description that indicates the purpose or use of the material, for example: “zirc. binder,” “mold-binder component”, “cleaner”, “wash,” “bearing lube”, “topcoat”, “releasing”, etc.

**b. Exception:** This rule does not require listing or recording of material arriving at the facility with less than 1.1% organic compound content.

**502.2 Use:** Records shall be maintained which show the type, amount used, and VOC content, expressed in either pounds of VOC per gallon or grams of VOC per liter, of each VOC-containing material. Records shall be updated according to the following schedule.

Materials differing only in brand or manufacturer but having the same composition and formula may be totaled as a single material.

**a.** **Monthly:** By the end of the following month, update each month's usage of all VOC-containing materials except as provided in subsections "b" and "c" following.

**b.** **Yearly:** By January 31, update the usage figures for the year just past for the materials of which less than 15 gallons fluid or 100 lb (45 kg) solid are used in any year.

**c.** **Daily:** Daily update usage of all binders if any binder(s) used have a VOC content exceeding 3.5 lb VOC/gallon (measured minus water and non-precursor compounds) and are not controlled by an ECS.

**503** **COMPLIANCE DETERMINATION - TEST METHODS:** The test methods as they exist on December 16, 1998, as listed below, are adopted by reference. This adoption by reference includes no future editions or amendments. Copies of test methods referenced in this Section 503 are available at the Maricopa County ~~Environmental Services~~ Air Quality Department, 1001 ~~North~~ N. Central ~~Avenue~~ Ave., Phoenix, AZ, 85004-~~1942.~~ When more than one test method is permitted for a determination, an exceedance of the limits established in this rule determined by any of the applicable test methods constitutes a violation of this rule.

**503.1** Quantification of VOC and solids content of binders, required in order to comply with subsections 301.1b and 301.1c, shall be determined using:

**a.** The EPA Reference Method 24 (40 CFR, Part 60, Appendix A), or Method 31 of California's Bay Area Air Quality Management District as amended April 15, 1992, or by the April 1997 revision of California's South Coast Air Quality Management District Method 313-9, or by a current Certified Data Sheet, signed by an official of each facility that formulated the binders.

**b.** If an averaging scheme is used pursuant to subsection 301.1c, the owner or operator shall sample each binder formulation at least once per year during the time any binder(s) exceeding 3.5 lb/gal. is being used, and record the VOC content as determined by EPA Method 24 at a testing laboratory.

**503.2** The control efficiency of an Emission Control System or other control equipment/system used pursuant to subsection 301.1 or subsection 301.2 shall be determined according to EPA Reference Methods 18, 25, or an applicable submethod of Method 25 (Title 40, CFR Part 60, Appendix A).

**503.3** Capture efficiency of an Emission Control System required by subsection 301.1a shall be determined by mass balance in combination with ventilation/draft rate determinations referenced in subsection 503.4, or by Method 204 and its applicable submethods, Appendix M. 40 CFR 51.

**503.4** Ventilation/draft rates of an Emission Control System required by subsection 301.1 shall be determined by EPA Reference Methods 2, 2A, 2C, or 2D (40 CFR Part 60, Appendix A).

**503.5** The following equation is used to correct the VOC concentration to7.0% oxygen, using the percent oxygen of the emission test:

(VOC concentration) x (20.9 - 7.0) / (20.9 - O2%) = Adjusted VOC concentration, where: "VOC concentration" and "O2%" are actual emission-test results.

**504** **AVERAGING:** For metal investment casting facilities using any binder exceeding 3.5 lbs VOC/gallon less water and non-precursor compounds, daily-weighted averaging shall be performed on each day of such usage that demonstrates compliance with subsection 301.1c. Averaging shall be performed as follows:

**504.1** **Emission Computation Schedule:** Each workday's VOC emissions and the daily-weighted average expressed in grams of VOC per liter of binder (or lb/gal) shall be computed and recorded no later than 12 hours after the end of that workday. Binder used in any day shall have all its emitted VOC ascribed to that day even if evaporation is not complete until a following day. At the end of a day, the numerical quantity of any leftover binder which will not be used again, shall be added to the sum of the total binder used of that same formulation used on that day. However, the amount of leftover binder does not need to be added to the sum of the total binder used on that day if such binder is stored in sealed container(s), and a determination of VOC content is made by Method 24 and recorded in the log, prior to removal from the site.

**504.2** **Bulk Accounting:** A separate account shall be kept and updated as bulk binder ingredients arrive and as such ingredients are used up. This account shall include deliveries of VOC-containing diluents such as alcohol and other make-up solvents. Purchase order and inventory records can suffice for this if they are at all times kept complete, in a form usable for such accounting, and available to the Control Officer.

**504.3** **Averaging Schedule:** A list shall be kept current containing the name/designation of each binder formulation and the amount of each constituent in each formulation, and including the mass of VOC per unit volume of binder, less water and non-precursor

organic compounds. The amounts of each binder formulation used, including make-up formulations, shall be recorded at the end of each mold-making shift. The daily-weighted average expressed in grams VOC per liter of binder (or lb/gal), less water and non-precursor organic compounds, shall be computed and recorded no later than 12 hours after the end of each workday.

**504.4 MATHEMATICALLY CALCULATING THE DAILY-WEIGHTED AVERAGE:** The daily-weighted average VOC content of all the binders used in a day facility-wide, a quantification required in order to comply with subsection 301.1c, shall be calculated using the following equation and be expressed in units of mass of VOC per unit volume of binder excluding any water and any non-precursor organic compounds (non-precursors).

$$VOC_w = \frac{V_1C_1 + V_2C_2 + \ldots\ldots\ldots + V_nC_n + M_{va}}{V_1 + V_2 + \ldots\ldots\ldots\ldots V_n + V_{va} + V_{sa}}$$

where:

$VOC_w$ = The daily-weighted average VOC content of all "n" binder formulations ("a" through "n") used during a day throughout the facility expressed in grams of VOC per liter of binder (or lb/gal) after water and non-precursors are excluded.

$C_1$ = The VOC content of the first formulation used on a production day in grams per liter of binder (lb/gal), excluding water and non-precursors.

$C_2$ = The VOC content of the second binder-formulation used on a production day, in grams per liter of binder (or lb/gal), excluding water and non-precursors.

$C_n$ = The VOC content of the very last binder formulation used on a production day when a total of "n" formulations were used, and the only formulation remaining to be accounted for. It is expressed in grams VOC per liter of binder-formulation "n" (or lb/gal), excluding water and non-precursors.

$M_{va}$ = The total mass of VOC added to any previously formulated binder used during the course of the day expressed in grams (or lbs). This includes the VOC portion of added materials which also contain non-VOC components.

$V_1$ = The total volume used throughout the day of the first binder formulation used that day, expressed in liters (or gal), excluding the volume of any water and the volume of any non-precursors.

$V_2$ = The total volume used throughout the day of the second binder formulation used that day, in liters (or gal), excluding the volume of water and non-precursors.

$V_n$ = The total volume used throughout the day of the very last binder formulation used that day, when a total of "n" formulations were used. It is expressed in liters (or gal) of formulation "n" not including the volume of any water and non-precursors.

$V_{va}$ = The total volume of VOC in liters (or gal) added to any and all previously formulated binders during the course of the day for make-up, viscosity reducing, or other purpose(s). If such VOC is used in a mixture containing non-VOC components, the volume of the non-VOC portion is excluded when making calculations.

$V_{sa}$ = The total volume of solids in liters (or gal) added during the day to any already formulated binders used during that day such solids are added. Such volume shall be equivalent to the volume of solid material remaining after any volatile material has been removed by the drying oven under the conditions specified in a Method 24 test, as referenced in Section 503.

## REGULATION III – CONTROL OF AIR CONTAMINANTS

## RULE 342
## COATING WOOD FURNITURE AND FIXTURES

### INDEX

**SECTION 100 – GENERAL**

101 PURPOSE
102 APPLICABILITY

**SECTION 200 – DEFINITIONS**

201 ADHESIVE
202 AEROSOL-SPRAY COATING
203 AIR-ATOMIZED SPRAY (GUN)
204 ARCHITECTURAL COATING
205 BASECOAT
206 CERTIFIED PRODUCT DATA SHEET
207 COATING
208 CONVENTIONAL AIR-ATOMIZED SPRAY (SYSTEM)
209 CUSTOM REPLICA MILLWORK
210 DAY
211 DILUENT
212 ELECTROSTATIC APPLICATION

213 EMISSION CONTROL SYSTEM (ECS)

214 FACILITY

215 FAUX FINISH

216 FINISHING MATERIAL

217 HIGH SOLIDS STAINS

218 KILOGRAMS VOC PER KILOGRAM OF COATING SOLIDS

219 LOW PRESSURE SPRAY GUN

220 LOW SOLIDS STAINS

221 NONPERMANENT FINAL FINISH

~~222 NON-PRECURSOR ORGANIC COMPOUND~~

~~223~~ 222 POUNDS VOC PER POUND OF COATING SOLIDS

~~224~~ 223 REPAIR COATING

~~225~~ 224 RESTRICTED-USE GUN

~~226~~ 225 SEALER OR PRIMER

~~227~~ 226 SINGLE RESIN-LAYER FINISH

~~228~~ 227 STAIN

~~229~~ 228 STRIPPABLE COATING

~~230~~ 229 STRIPPING OPERATION

~~231~~ 230 TOPCOAT

~~232~~ 231 TOUCH UP COATING

~~233~~ 232 EFFICIENCY

~~234~~ 233 VOC-BORNE COATING

~~235~~ 234 VOC-SOLVENT

~~236 VOLATILE ORGANIC COMPOUND (VOC)~~

~~237~~ 235 WASHCOAT

~~238~~ 236 WOOD MILLWORK

~~239~~ 237 WOOD-PRODUCT

~~240~~ 238 WORKING DAY

**SECTION 300 – STANDARDS**

301 LIMITATIONS – VOC CONTENT

302 LIMITATION OF CONVENTIONAL AIR-ATOMIZED SPRAY AND OTHER SPRAY METHODS ATOMIZING WITH HIGH-PRESSURE AIR

303 OPERATION AND MAINTENANCE

304 CLEANUP AND CLEANING SUPPLY AND APPLICATION EQUIPMENT

305 HANDLING AND DISPOSAL OF VOC

306 DESIGNATION OF VOC-CONTENT REQUIREMENT

307 EXEMPTIONS

**SECTION 400 – ADMINISTRATIVE REQUIREMENTS**

401 COMPLIANCE SCHEDULE

402 REGULATORY CLARIFICATION

403 GUN TAGGING REQUIREMENTS

**SECTION 500 – MONITORING AND RECORDS**

501 RECORDKEEPING AND REPORTING

502 COMPLIANCE DETERMINATION – TEST METHODS

**APPENDIX A TO RULE 342**

**APPENDIX B -- A SHORT-FORM OPTION**

**APPENDIX C TO RULE 342**

**Adopted 04/03/96**

**Revised 11/20/96**

**Revised 09/25/13**

**MARICOPA COUNTY**

**AIR POLLUTION CONTROL REGULATIONS**

**REGULATION III – CONTROL OF AIR CONTAMINANTS**

**RULE 342**

**COATING WOOD FURNITURE AND FIXTURES**

**SECTION 100 – GENERAL**

**101** **PURPOSE:** To limit emissions of volatile organic compounds from the surface preparation and coating of wood furniture and fixtures.

**102** **APPLICABILITY:** The provisions of this rule apply to any facility in Maricopa County applying finishing material to furniture or fixtures made of wood or wood derived material. Simplified provisions of Appendix B in this rule may be used by facilities which agree to a permit limit of less than 10 tons of VOC emissions per year. For sources emitting less than 2 tons of VOC per year, consult subsection 307.2d. This rule does not apply to the coating of any millwork included under SIC #2431.

**SECTION 200 – DEFINITIONS:** For the purpose of this rule, the following definitions shall apply~~:~~, in addition to those definitions found in Rule 100 (General Provisions and Definitions) of these rules. In the event of any

inconsistency between any of the Maricopa County air pollution control rules, the definitions in this rule take precedence.

**201** **ADHESIVE –** Any substance, usually having a fluid phase during application, used principally to bond two or more surfaces into close proximity with one another.

**202** **AEROSOL SPRAY COATING –** A coating which is sold in a hand-held, pressurized, non-refillable container, usually of less than 22 fluid ounces (0.66 liter) capacity, and which is expelled from the container in a finely divided form when a valve on the container is depressed.

**203** **AIR-ATOMIZED SPRAY (GUN) –** Equipment used to apply coatings in which the chief means of atomizing the coating is via pressurized air which also mixes into the cloud of coating particles after expulsion from a spray nozzle.

**204** **ARCHITECTURAL COATING –** Any coating applied to stationary structures and their appurtenances, to mobile homes, to pavements or to curbs.

**205** **BASECOAT –** A coat of colored material, usually opaque, that is applied before graining inks, glazing coats, or other high-hiding finishing materials. A basecoated surface usually receives a topcoat also.

**206** **CERTIFIED PRODUCT DATA SHEET –** A document, signed by an officer of a coating-supplying operation, stating precisely the maximum VOC content of a particular coating as supplied.

**207** **COATING –** Any liquid, fluid, or mastic composition which is converted to a solid (or semi-solid) protective, decorative, or adherent film or deposit after application to a substrate as a thin layer.

**208** **CONVENTIONAL AIR-ATOMIZED SPRAY –** Any spray coating method in which the coating is atomized principally by mixing it with compressed air at an air pressure greater than 10 pounds per square inch (gauge) at the point of atomization, and which is not used with an electrostatic transfer system. Airless and air-assisted airless spray technologies are not conventional air-atomized spray because the principal means of atomizing the coating is via hydraulic pressure and not by mixing the coating with compressed air.

**209** **CUSTOM REPLICA FURNITURE –** Furniture individually produced or repaired after an order has been received from a client specifying a particular style and period, using both the style and the methods of construction, including materials, joinery, and finishes, which are authentic to the period.

**210** **DAY –** A period of 24 consecutive hours beginning at midnight.

**211** **DILUENT –** For the purpose of this rule, any fluid in or added to a coating such as thinner, retarder, reducer, solvent, or drying accelerator which solubilizes, adjusts concentration, viscosity, flow, or drying rates and which evaporates as the coating film solidifies and cures.

**212** **ELECTROSTATIC APPLICATION –** A method of applying coating by electrically charging coating droplets or particles causing their deposition onto a substrate by electrostatic attraction.

**213** **EMISSION CONTROL SYSTEM (ECS) –** A system for reducing emissions of organic compounds, consisting of both collection and control devices which are approved in writing by the Control Officer and are designed and operated in accordance with good engineering practice.

**214** **FACILITY –** For the purpose of this rule, all the pollutant-emitting activities located on one or more contiguous or adjacent properties, under the control of the same person or persons under common control, and described by one or more of the industrial groupings listed in Section 238 of this rule.

**215** **FAUX FINISH –** A finish intended to simulate a surface other than wood, including, but not limited to, stone, sand, metal, fur and leather.

**216** **FINISHING MATERIAL –** A coating other than one designed solely or principally as an adhesive, temporary maskant, and/or preservative. For wood furniture and fixtures, finishing materials include, but are not limited to, topcoats, sealers, primers, stains, basecoats, washcoats, enamels, toners, glazes, and graining inks.

**217** **HIGH SOLIDS STAINS –** Stains which are formulated to enhance wood grain and change wood color, but not conceal surface grain. For the purpose of this rule, high solids stains are stains that contain at least 120 grams of solids per liter (1 lb/gal) of stain as applied, and can include wiping stains and glazes.

**218** **KILOGRAMS VOC PER KILOGRAM OF COATING SOLIDS –** A measurement that is used in this rule to express the VOC content of a coating. For any coating, kilograms VOC per kilogram coating solids is numerically identical to both pounds of VOC per pound of coating solids and to grams VOC per gram of coating solids. Abbreviations used include kg VOC/kg solids (lb VOC/lb solids) or simply kg/kg (lb/lb).

**219** **LOW PRESSURE SPRAY GUN –** An air-atomized spray gun which by design functions best at tip pressures below 10 psig (0.7 bar) measured according to subsection 502.2 of this rule, and for

which the manufacturer makes no public claims that the gun can be used effectively above 12 psig (0.8 bar).

**220** **LOW SOLIDS STAINS –** Stains which are formulated to enhance wood grain and change wood color, but not conceal surface grain. For the purpose of this rule, low solids stains are stains that contain up to 120 grams of solids per liter (1 lb/gal) of stain as applied, and include sap stain, toner, and non-grain-raising (NGR) stains.

**221** **NONPERMANENT FINAL FINISH –** A material such as wax, polish, non-oxidizing oil or similar substance which retains its effect only temporarily and must be periodically reapplied to a surface to maintain or restore the material's intended effect.

~~**222**~~ ~~**NON-PRECURSOR ORGANIC COMPOUND** – Any of the following organic compounds which have been designated by the EPA as having negligible photochemical reactivity: acetone; methane; ethane; methylene chloride (dichloromethane); 1,1,1-trichloroethane; trichlorofluoromethane (CFC-11); dichlorodifluoromethane (CFC-12); chlorodifluoromethane (HCFC-22); 1,1,2-trichloro-1,2,2-trifluoroethane (CFC-113); 1,2-dichlorotetrafluoroethane (CFC-114); chloropentafluoroethane (CFC-115); trifluoromethane (HFC-23); 2,2-dichloro-1,1,1-trifluoroethane (HCFC-123); 2-chloro-1,1,1,2-tetrafluoroethane (HCFC-124); 1,1-dichloro-1-fluoroethane (HCFC-141b); 1-chloro-1,1-difluoroethane (HCFC-142b); pentafluoroethane (HFC-125); 1,1,2,2-tetrafluoroethane (HFC-134); 1,1,1,2-tetrafluoroethane (HFC-134a); 1,1,1-trifluoroethane (HFC-143a); 1,1-difluoroethane (HFC-152a); parachlorobenzotrifluoride (PCBTF); perchloroethylene (tetrachloroethylene); 3,3-dichloro-1,1,1,2,2-pentafluoropropane (HCFC-225ca); 1,3-dichloro-1,1,2,2,3-pentafluoropropane (HCFC-225cb); 1,1,1,2,3,4,4,5,5,5-decafluoropentane (HFC-43-10mee); cyclic, branched or linear completely methylated siloxanes; all completely fluorinated, completely saturated: alkanes, ethers and tertiary amines; sulfur-containing perfluorocarbons with no unsaturations, no hydrogen, and with sulfur bonds only to carbon and fluorine.~~

~~**223**~~**222** **POUNDS VOC PER POUND OF COATING SOLIDS –** A measurement of a coating's VOC content identical with kilograms VOC per kilogram of coating solids.

~~**224**~~**223** **REPAIR COATING –** A coating used to recoat portions of a previously coated product to cover mechanical damage to that previous coating following normal painting operations.

~~**225**~~**224** **RESTRICTED-USE GUN –** Any spray gun which atomizes coating using compressed air, such that in normal use or a use advertised by the manufacturer or distributor, the tip pressure exceeds 12 psig (0.8 bar) in measurements done pursuant to subsection 502.2. Restricted-use gun also includes, but is not limited to, all conventional air-atomized spray guns.

~~226~~225 **SEALER OR PRIMER –** A film-building finishing material used to seal the pores of wood or wood-derived material before additional coats of finishing material are applied. Finishing materials used primarily to alter the appearance or color of the substrate, such as stains, washcoats, glazes, inks, and toners, are not sealers.

~~227~~226 **SINGLE RESIN-LAYER FINISH –** A completed, consumer ready finish, which has received only one application of resin-based coating serving as both sealer and topcoat, and having a total average dry finish thickness from the top of the finish to the surface of the wood-product substrate not exceeding 3 mils (0.076 mm) before sanding, as determined pursuant to the test method in subsection 502.3. If a washcoat is also used, the finish is not a single resin-layer finish.

~~228~~227 **STAIN –** A coating, excluding sealers and topcoats, that is formulated to enhance wood grain and change wood color, but not conceal surface grain. Stain includes all high solids stains and all low solids stains.

~~229~~228 **STRIPPABLE COATING –** A coating which is applied to spray booth surfaces to receive the overspray and protect the substrate, and which is designed to be readily pulled off in strips or sheets and disposed of.

~~230~~229 **STRIPPING OPERATION –** Any operation in which organic solvent is used to remove coating from a substrate.

~~231~~230 **TOPCOAT –** The last permanent, functional film-building finishing material applied to a manufactured wood product. When the wood-product substrate is already sealed with sealer, any further coats that build a functional film are topcoats. Finishing materials used primarily to alter the appearance or color of the substrate, such as stains, washcoats, glazes, inks, and toners are not topcoats. A nonpermanent final finish is not a topcoat.

~~232~~231 **TOUCH UP COATING –** A coating used to cover minor coating imperfections after the main coating operation.

~~233~~232 **TRANSFER EFFICIENCY –** The ratio of the weight of coating solids deposited on an object to the total weight of coating solids used in a coating application step or series of such steps, expressed as a percentage.

~~234~~233 **VOC-BORNE COATING –** A coating in which the volatile portion contains, by weight, more VOC than water.

~~235~~234 **VOC-SOLVENT –** A solvent or diluent, used to solvate, dilute, reduce, thin, clean or strip, in which the weight-percent of VOC exceeds the weight percent of water.

~~236~~ ~~**VOLATILE ORGANIC COMPOUND (VOC)** – Any organic compound which participates in atmospheric photochemical reactions, except a non-precursor organic compound.~~

~~237~~235 **WASHCOAT –** A transparent special purpose coating having a solids content by mass of 12.0 percent or less, and which is used to seal wood-product surfaces for any of the following purposes: to prevent undesired staining, to control penetration of subsequent finishes, to provide a barrier when paper laminates are applied to the wood-product, to seal glazes, and to improve adhesion of a waterborne topcoat.

~~238~~236 **WOOD FURNITURE AND FIXTURES –** All furnishings made of wood-product that are included in Standard Industrial Classification (SIC) numbers 2434, 2511, 2512, 2517, 2519, 2521, 2531, 2541, or 2599 as well as wood-product on convertible furniture under SIC number 2515.

~~239~~237 **WOOD-PRODUCT –** Wood or wood-derived material, such as chipboard, particle board, fiberboard, pressed board, paper, and any other material derived from wood, bamboo, cane, or rattan, that retains some of the physical structure(s) of such original material(s), even if only at a microscopic level.

~~240~~238 **WORKING DAY –** A day, or any part of a day, in which a facility is engaged in manufacturing.

## SECTION 300 – STANDARDS

### 301 LIMITATIONS – VOC CONTENT:

**301.1** No person shall apply a topcoat or sealer to wood furniture or fixtures unless VOC content is limited either to the pounds of VOC per pound of solids (kg VOC/kg solids) in Column A or to the grams of VOC per liter in column B:

**a. General VOC Limits of Coatings**

**Table 1**

| | Column A<br>Lb VOC/lb solids | Column B<br>Grams VOC/liter ** |
|---|---|---|
| Topcoat | 1.8 | 635 |
| Sealer | 1.9 | 645 |
| Acid-cured, alkyd amino topcoat | 2.0 | 655 |
| Acid-cured, alkyd amino vinyl sealer | 2.3 | 680 |
| | | **less non-precursor compounds & water |

b. **Option: Lower VOC topcoat and unlimited sealer:** There is no VOC limit on sealer when the sealer's topcoat does not exceed 0.8 lb VOC/lb (0.8 kg/kg).

c. **Coatings with no VOC limits:** Stains, washcoats, glazes, toners, inks, and other coatings not specified in this subsection 301.1 nor in subsection 301.2 have no VOC limits.

**301.2 Strippable Booth Coatings:** No person shall use a strippable booth coating unless, as applied, the coating has either no more than 0.8 lb VOC/lb solids or no more than 3.0 lb/gal (360 g/l) less non-precursor volatile compounds.

**301.3 Emission Control System (ECS) As An Alternative Control:** A facility may meet the VOC limits of either or both subsections 301.1 and 301.2 if the owner or operator complies with all provisions in this rule's Appendix C and with the other applicable provisions of this rule.

**301.4 Averaging:** An owner or operator of a larger furniture coating facility meeting the applicability requirements of subsection b., in this rule's Appendix A, may comply with subsection 301.1a. of this rule by complying with Averaging-Formula 1 or Averaging-Formula 2 in Appendix A and by complying with all other applicable provisions of Appendix A.

**301.5 Smaller Source Option:** The owner or operator of a facility that has emitted 2or more tons but less than 10 tons per year of VOC from all wood coating and associated operations is exempted from all provisions under Sections 300, 400, and 501 (but not Sections 100, 200, and 502) if all provisions are complied with in this rule's Appendix B. Sources emitting less than 2 tons of VOC per year may be allowed exemptions pursuant to subsection 307.2d.

## 302 LIMITATION OF CONVENTIONAL AIR-ATOMIZED SPRAY AND OTHER SPRAY METHODS ATOMIZING WITH HIGH-PRESSURE AIR:

**302.1 Evidence of Transfer-Efficient Spray Equipment:** No person shall spray wood furniture with coating exceeding 1 lb VOC/lb solids (1 kg VOC/kg solids) without providing evidence of possession and use of a low pressure spray gun or system, an electrostatic system, or a system in which the energy for atomization is provided principally via hydraulic pressure; this includes air assisted airless and ultra-low-volume-air assisted technologies. Such requirement does not apply to any facility, activity or person specifically exempted by applicable subsections of Section 307 of this rule, or to

any specific system which is approved by the Administrator as having a transfer efficiency consistently exceeding 64%.

**302.2 Limitation Of Air-Atomized Spray Other Than Low Pressure:** No person shall use a conventional air-atomized spray gun or other *restricted use gun*, except:

**a.** To apply finishing materials that have a VOC content not exceeding 1.0 lb VOC/lb solids (1.0 kg/kg).

**b.** If VOC emissions from the finishing application station, employing such a gun, are captured and directed to an ECS, pursuant to the provisions of Appendix C.

**c.** For touch-up and repair under either of the following conditions:

**(1)** such application is performed after completion of the entire finishing operation; or

**(2)** such application is performed after applying stain, and before any further coating, by equipment having a total capacity not exceeding 2.1 gallons (8 liters).

**d.** To apply less than 5% of all coating pursuant to subsection 307.2.e.

**303 OPERATION AND MAINTENANCE:** Any person subject to this rule shall operate and maintain in proper working order all process equipment in which VOC-containing materials are used or stored.

**304 CLEANUP AND CLEANING SUPPLY AND APPLICATION EQUIPMENT:**

**304.1 Booth Cleaning:** No person shall clean spray booth components using a solvent containing more than 8.0 percent by weight of VOC, including water and non-precursor compounds, except for: conveyors; continuous coaters and their enclosures; and metal filters. If the spray booth coating is being replaced, a person shall use no more than 1.0 gallon (3.8 liters) VOC-solvent to clean the booth.

**304.2 Cleaning Guns and Lines:** A person shall collect all solvent used to clean spray guns and shall pump or drain all solvent used for line cleaning into non-leaking container(s). Such containers shall be immediately closed or covered after all the solvent has been collected, and shall remain so except when in use.

**305 HANDLING AND DISPOSAL OF VOC**

**305.1** **Use and Storage:** A person shall cover and keep covered each VOC-containing material intended for the day's production, which is not currently in use. A person shall store finishing and cleaning materials in closed containers.

**305.2** **Disposal Of VOC And VOC-Containing Material:** A person shall store all VOC-containing materials, including, but not limited to, rags, waste coatings, waste solvents and their residues, in closed containers which are legibly labeled with their contents and which remain covered when not in use.

**306** **DESIGNATION OF VOC-CONTENT REQUIREMENT:** Effective May 3, 1996, a manufacturer of wood-furniture coatings which are subject to this rule shall provide on each coating container or as an accompanying specification of each coating container a designation of VOC content. For topcoats and sealers, this shall be in pounds of VOC per pound of coating solids (g/g) or in pounds VOC per gallon (g/l) less water and non-precursor volatile compounds. This requirement shall not apply to containers having a capacity of one liter (1.05 quart) or less.

**307** **EXEMPTIONS:**

**307.1** **Total Exemption:** The following materials are exempt from this rule: adhesives, architectural coatings, printing ink, and coatings not applied on or over a wood product substrate.

**307.2** **Partial Exemptions:**

**a.** **Touch-up cans:** Coatings in aerosol spray cans not exceeding 22 fl. oz. (0.66 liter) capacity used exclusively for touch-up and/or repairs are subject only to the recording requirements of this rule.

**b.** The following shall be exempt from subsection 301.1 and Section 302:

**(1)** The use of the following coating types when the annual total use of all such types together is less than 250 gallons (948 liters): prepackaged aerosol spray cans which are not used for touch-up or repair, metal leaf finishes, and faux finishes.

**(2)** **Refinishing, replacement, and custom replica furniture operations:** Any refinishing operation necessary for preservation, to return the furniture or fixture to original condition, to replace missing furniture to produce a matching set, or to produce custom replica furniture.

**c.** The coating for a single resin-layer finish which does not exceed a VOC limit of 3 lb VOC/lb solids for completed finishes up to 3 dry mils thickness or does not exceed 2.3 lb/lb for finishes over 3 dry mils is exempt from the VOC-limits of subsection 301.1 if all of the following conditions are met:

**(1)** The containers are clearly marked "FOR USE IN SINGLE RESIN LAYER FINISH";

**(2)** Facility records clearly identify this material: "DOES NOT MEET THE VOC LIMITS OF SECTION 301, RULE 342. - FOR USE ONLY IN SINGLE RESIN-LAYER FINISHES"; and

**(3)** The booth used to apply a single resin-layer finish above 2.3 lb VOC/lb solids is dedicated to that operation only, and is clearly labeled "FOR SINGLE RESIN-LAYER FINISHES ONLY".

**d.** **Small Source Status:** A furniture coating facility which at any time demonstrates that it currently meets all the requirements in subsections 307.2d. (1) and (2) following, is exempt from all provisions of this rule except for Section 303 “Operation & Maintenance” and Section 305 "Handling and Disposal of VOC". An operator of such an exempted facility shall keep on the premises current records of all coating related materials currently used, and their VOC content. For this purpose, a complete, updated set of receipts/invoices and Material Safety Data Sheets (MSDSs) will suffice if each receipt/invoice is retained on the premises at least two years.

**(1)** Facility records demonstrate that no more than a total of 55 gallons (209 liters) of VOC-borne wood-product coatings plus VOC-solvent are used in any month and that such monthly total divided by that month’s number of days of coating application does not exceed 3.0 gallons (11.4 liters); and

**(2)** The facility emits less than 1814 kg (4000 lb) VOC, facility-wide per year from all wood-product coating operations including VOC in both solvent-borne and water-borne coatings, all VOC diluent added to coatings, all solvent cleaning and stripping, and VOC solvent used for coating equipment cleanup.

**e.** **Using Conventional and other Restricted Use Guns; Red Tag:** In addition to the uses of restricted-use guns allowed under subsections 302.2 a., b., and c., a person may use a conventional air-atomized or other restricted use gun to apply coatings exceeding 1 lb VOC/lb if all the following conditions are met:

**(1)** The volume of such coating applied in this way is less than 5% of the total volume of coating applied at the facility;

**(2)** Each gun has a red tag when spraying materials exceeding 1 lb VOC/lb. Requirements for gun tagging are in Section 403;

**(3)** A log shall be kept pursuant to subsection 501.2c. of the amount of coating used by each such gun. This shall be done daily or each time coating is added to the gun's coating reservoir; and semi-annual calculation shall be made, pursuant to subsection 501.2.

**Errata Note1**[6]

**e. Using a Conventional or other Restricted Use Gun Identified by a Red Tag:** In addition to uses allowed under subsections 302.2 a., b., and c., a person may use a conventional air-atomized or other restricted use gun to apply coatings exceeding 1 lb VOC/lb on the following limited basis:

**(1)** The volume of such coating applied in this way is less than 5% of the total volume of coating applied at the facility.

**(2)** Each gun always has a red tag when applying coatings exceeding 1 lb/lb. Tag requirements are in Section 403.

**(3)** A log shall be kept pursuant to subsection 501.2c. of the amount of coating used by each such gun. This shall be done daily or each time coating is added to the gun's coating reservoir; and semi-annual calculation shall be made, pursuant to subsection 501.2c.

## SECTION 400 - ADMINISTRATIVE REQUIREMENTS

**401 COMPLIANCE SCHEDULE:** The following schedule applies, with exceptions for an Emission Control System provided in Appendix C.

**401.1 Sources Emitting 50 TPY:** Each facility which has applied for or received a Title V permit, or a permit with an annual VOC limit of 50 tons or more, or which has had an aggregate VOC emission to atmosphere after December 31, 1989, of 50.0 tons (45.35 Mg) or more in any calendar year or 300 pounds (136 kg) or more in any day, emitted ~~from wood coating operations and associated cleaning processes shall by May 3, 1996, be~~

6 1 This errata note is not part of Rule 342. For the reader's convenience, the second subsection 307.2e. was an earlier draft of the section not intended to be left in the rule. It will be removed for the next revision of this rule.

in compliance with all requirements of this rule and have submitted a Control Plan. The Control Plan shall set forth the maximum VOC content of each coating-as-applied and provide documentation showing how these values were determined.

**401.2** **Other Sources:** The schedule follows for any wood furniture and/or fixture facility with total VOC emissions to atmosphere in each of the years 1990 through 1995 of no more than 300 pounds (136 kg) in any day and 50.0 tons (45.35 Mg) in any calendar year, emitted from wood coating operations and associated cleaning processes:

**a.** A facility shall be in compliance with all applicable provisions of this rule, except for Section 301 and Section 302 by May 3, 1996. Such facility shall be in compliance with Section 301 and Section 302 of this rule by November 15, 1996.

**b.** **Control Plan:** A facility which has emitted more than 25 tons of VOC from coating operations in any of the years 1993 through 1995 must submit a Control Plan by August 1, 1996, setting forth the maximum VOC content and copies of the documentation showing how the coating-as-applied values were determined.

## 402 REGULATORY CLARIFICATION

**402.1** **Status With Respect To Rules 330 And 336:** No wood furniture or fixture coating operation is subject to Rule 330 or to Rule 336.

**402.2** **Component Materials That Were Subject To Prior Regulation:** The regulatory status of facilities, owners or operators is not affected by the fact that component materials, such as wood composites or paneling, may have been subject to Reasonably Available Control Technology (RACT) or other regulatory requirements in their original manufacture, before their subsequent use by a facility in Maricopa County.

**402.3** **Other Rules:** Nothing in this rule exempts a person from complying with the NESHAP (National Emission Standards for Hazardous Air Pollutants) for coating wood furniture and fixtures or from complying with any other applicable Federal, states, and local laws or regulations.

**402.4** **Coating Over Wood Coating(s) The Same As Coating Onto Wood:** The VOC-limits for finishing materials given in subsection 301.1 of this rule apply to such coatings whether applied directly onto any area of wood-product substrate or on any intermediate layer(s) of coating on the wood-product substrate.

**403 GUN TAGGING REQUIREMENTS:** An owner or operator shall use a red 4 square-inch vivid, durable tag, sticker, or painted emblem/label visible on the gun or within 3 ft of the gun on the gun's hose to meet the tagging/labeling requirements of subsection 307.2e.

## SECTION 500 - MONITORING AND RECORDS

**501 RECORDKEEPING AND REPORTING:** An owner or operator shall keep the following records and lists in a consistent and complete manner and shall make them available to the Control Officer without delay during normal business hours. Each record shall be maintained a minimum of five years.

**501.1 Current List:**

**a. VOC-containing materials:** A current list of all VOC-containing material shall be maintained which contains their name or code and their VOC content. Any qualified single resin-layer finish shall be identified as such.

**b. How to express VOC content:**

**(1) Non-coatings:** Use grams VOC/liter or lb VOC/gal. for reducers, thinners, cleaners, etc.

**(2) Stains:** Use grams VOC/liter or lb VOC/gal.

**(3) Topcoats and Sealers:** Use either lbs VOC/lb solids or g VOC/liter (lb VOC/gal), except:

**(a)** Any topcoat or sealer sprayed with a conventional or other restricted use gun shall be expressed in lbs VOC/lb solids.

**(b)** *Two VOC content values* must appear for each topcoat and each sealer that is expressed as grams VOC per liter or pounds VOC per gallon: both grams VOC/liter (lb VOC/gal) *including* water and non-precursor organic compounds, *and* grams VOC/liter (lb VOC/gal) *less* water and non-precursor organic compounds.

**(4) Other Coatings:** Use grams/liter (or lb/gal), or lbs VOC/lb solids for coatings that are neither sealers nor topcoats, such as washcoats, glazes, etc.

**c. Acceptable Format:** VOC-containing materials shall be listed neatly and completely. The following is an example of an acceptable method:

**Example**: Identify and list each VOC-containing material in one of the following 6 categories: 1. topcoats; 2. sealers; 3. catalyst/hardeners; 4. diluents, such as reducers, coating solvents and thinners; 5. cleaning and stripping solvents; and 6. other VOC-containing materials. Next to each material, record the VOC-content found on the container, an MSDS, an invoice, or other source.

**d. Mix ratios:** A current list shall be maintained of the manufacturer's recommended mix ratio of components, including but not limited to adding reducers and catalyst/hardeners, except when the manufacturer has no recommendations for any additions.

**501.2 Schedule For Recording Material Usage:**

**a. Daily Updates For Non-Compliant Material:** The amount of each day's use of each topcoat, sealer or booth material that exceeds applicable VOC limits of Section 301 or Section 304 shall be totaled and logged by the end of the following workday. VOC content shall be entered for each such material.

**b. Monthly Update For Materials Compliant with Sections 301 and 304**: By the end of the following month, an owner or operator shall update the following records for each month:

**(1)** For each topcoat and sealer to which reducer is added at any time after its arrival at a facility, enter the VOC content in lb VOC/lb solids or in grams/liter (lb/gal) less water and non-precursor organic compounds**.**

**(2)** The amount of coating, the amount of catalyst/hardener, and the amount of reducer/coating diluent used.

**(3)** The quantity and type of organic solvent used each month for stripping and cleaning.

**(4)** The quantity of organic solvent disposed of offsite during the month just ended.

**(5) Exception:** Update yearly the totals of the usage of each VOC containing material known to be used in amounts less than 15 gallons (57 liters) per year.

**c. Semi-Annual Updates of Coatings Applied with Restricted Use Gun:** Records associated with the Section 302 limitations on the use of conventional air-atomized spray equipment and other restricted-use guns shall be kept. These records shall

show for each semi-annual period the volume (VR) of finishing materials exceeding solids (1 lb VOC/ lb solids) (1 kg VOC/kg solids) applied with conventional air-atomized spray guns and other restricted use guns. In addition, the total volume of all finishing material (AMV) used throughout the facility shall be determined. The total volume (VR) so applied over the previous six-months is divided by the total of all coatings used in the same period (AMV) and these calculations and the result are entered in the log.

**501.3** **Disposal/Recovery:** An owner or operator shall keep records of disposal/recovery of all VOC-containing materials.

**502** **COMPLIANCE DETERMINATION - TEST METHODS:** When more than one test method is permitted for a determination, an exceedance of the limits established in this rule, as determined by any of the applicable test methods, constitutes a violation of this rule.

**502.1** Measurement of VOC content, pursuant to the VOC-limits of subsections 301.1, 301.2, and 302.2, and subsections 304.1 and 307.2c., shall be conducted and reported in accordance with EPA Test Method 24 (40 CFR 60, Appendix A). Acetone content shall be determined within the context of Method 24 by EPA Method 311 or other method acceptable to EPA. Multi-part coatings including those with reactive diluent(s) shall be tested by Method 24 procedures.

**502.2** Measurement of air pressure at the center of the spray gun tip and air horns of a conventional air-atomized spray gun (reference Section 302) shall be performed using a device in proper working order supplied by the gun's manufacturer for performing such a measurement.

**502.3** Measurement of mil thickness to determine compliance with single resin-layer finish parameters in Section 227 and subsection 307.2c. shall be performed by draw bar and calculations using the weight and area of the film and the density of the cured coating solids, by a Tooke Inspection Gage according to the instructions of its manufacturer, or by other means used for the purpose by a major coating manufacturer's laboratory or quality control.

## APPENDIX A TO RULE 342

## AN AVERAGING ALTERNATIVE

**a.** **Purpose:** The averaging provisions of this Appendix to Rule 342 allow the owner or operator of a furniture coating facility, which meets eligibility requirements, increased options in choosing coating types. These

provisions expand the range of the allowable VOC contents of coatings while limiting overall VOC emissions to amounts less than would be emitted at the VOC-content limits of subsection 301.1 of this rule.

**b.** **Eligibility to apply:** The owner or operator of any furniture coating operation, reasonably capable of annually emitting more than 25 tons of VOC and having at least one of the following four statuses with respect to VOC emissions, may apply to average:

**(1)** Has emitted more than 25 tons (21.7 Mg) of VOC in any year since 1989 and has a Maricopa County Air Quality Permit or is under consideration for such permit by the Control Officer;

**(2)** Has in its permit a VOC-emissions limit of 50 tons or more;

**(3)** Has applied for or received Title V status.

**c.** **How to apply:** An applicant shall submit a request for eligibility to the Control Officer. This request shall include a summary of the chief reasons for requesting eligibility for averaging.

**(1)** The Control Officer shall provide a brief questionnaire eliciting responses intended to reveal whether the operator has sufficient understanding and preparation to successfully average. This questionnaire shall require a sample of their intended recordkeeping format along with calculations containing the expected amount and VOC-contents of coatings intended to be used in averaging.

**(2)** The Control Officer may request confirmation, correction, or clarification from the owner or operator for responses to the questionnaire that are questionable; that appear unclear, erroneous, incomplete, or non-pertinent, or for which there is contrary evidence.

**(3)** The owner or operator shall submit a correctly completed questionnaire, signed by a responsible officer of the facility, no later than 14 calendar days prior to the first day of averaging.

**(4)** Control Officer approval of the completed questionnaire shall constitute an acceptance of application for minor permit revision. The Control Officer may request additional information characteristically required for minor revisions to the permits of wood furniture coaters as a class.

**(5)** Control Officer approval does not necessarily constitute satisfaction of all federal requirements nor preempt the EPA Administrator's asserting a right of approval.

**d.** **Definitions of terms used in an averaging regime:**

**(1)** **CREDIT CONSUMING COATING (EXCEEDING COATING) -** In an averaging regime, coating with average VOC content exceeding the neutral point for its particular coating type, such

as topcoat, sealer, etc. A credit consuming coating requires the use of credit generating coating(s) in order that the combination of all coatings in use will not exceed the limit set by the left side of the averaging formula.

(**2**) **CREDIT CONSUMING PIECE/EXCEEDING PIECE -** In an averaging regime, a piece of furniture which is a member of a model-line of furniture receiving such a high proportion of credit-consuming coating that when the VOC contents and coating quantities received by the model-line, are entered into an averaging formula of Section i., the sum yielded by the right side of the formula is consistently larger than the sum yielded by the left side of the formula.

**(3)** **CREDIT GENERATING COATING -** A coating which has VOC content well below the neutral point and, thus, is used in an averaging regime to create surplus VOC credit(s) to offset the excess emissions of particular credit consuming coating(s).

(**4**) **CREDIT GENERATING PIECE -** In an averaging regime, a piece of furniture which is a member of a model-line of furniture receiving so much credit generating coating that when the VOC contents and coating quantities, received by the model-line, are entered into an averaging formula, the sum yielded by the right side of the formula is consistently less than the sum yielded by the left side of the formula.

(**5**) **NEUTRAL POINT -** The particular number representing the VOC content of a particular coating type having the mathematical property that if it is included in an averaging formula it has no effect on the numerical results of the formula, regardless of how much of the coating is used. The neutral point VOC content for each affected coating-type is as follows:

**Using Formula 1:**
Topcoat neutral point - 0.72 kg VOC/kg coating solids. (Stains, sealers, etc. do not appear in Formula 1)

**Using Formula 2:**
The neutral point VOC content for each of the 5 types of coating in Formula 2 is as follows: Topcoat - 1.62 kg VOC/kg solids; sealer coat - 1.71; washcoat - 8.1; basecoat - 1.08

The neutral point for stains is expressed in kilograms VOC per liter of coating - 0.712 kg VOC/liter

**e. Basic requirements for all averaging regimes:**

**(1)** **Entire workdays:** Averaging regimes must be in place for no less than an entire 24 hour period and at all times during such 24-hour period. Normally, a workday will be the calendar day in

which work commences. However, an owner or operator may designate in writing a workday schedule beginning and ending at a specific time between 12 midnight and 4:30 AM if the last shift normally ends between midnight and 4:30 AM, unless the Control Officer issues written disapproval. The times of the averaging workday may be changed if written notification has been given the Control Officer at least five workdays before the start of the intended new schedule, and no communication of disapproval has been issued within this time by the Control Officer.

**(2)** **Averaging applies plant-wide:** An averaging regime applies throughout a facility to all production furniture coating occurring during all 24 hours of a workday for which an averaging regime is declared.

**(3)** **No exemption for single resin-layer finishes or acid-cured, alkyd amino coatings:**

**(a)** In averaging regimes using Formula 2, for surfaces which receive in total only one application of film building coating, the neutral point for that coating shall be the same as that for a sealer, 1.71 kg VOC/kg solids, and it shall be totaled with sealers in the averaging formula.

**(b)** Acid-cured, alkyd amino coatings, with or without vinyl chemistry, shall have the same neutral points in Formula 2 as do other sealers and topcoats (1.71 and 1.62, respectively) and shall be totaled in with the other sealers and topcoats in Formula 2.

**(4)** **Identifying credit consuming models:** Each furniture/finish model must be identified which on average does not by itself (i.e., by the combination of all coatings it receives) meet the applicable averaging formula (and must be offset by models whose coatings generate VOC credits). The model name and/or code of each credit consuming model must be identified in a permanent record for that purpose, along with a designation indicating that the model produces excess emissions. This designation can be the average grams of VOC above the formula limit, the maximum grams above the limit, number of exceeding grams at the first standard deviation, relative risk, or other term(s) created by the owner or operator that fulfill this purpose for the facility**.**

**(5)** **Exemption for physically separated lines:**

**(a)** At the Control Officer's discretion, an exemption from the requirement that the entire facility participate when an averaging regime is in effect can be granted for an additional coating line if: Such a coating line is both physically separate from the operations involving averaging and all monitoring, recordkeeping, and coating equipment including coating reservoirs are kept separate from the monitoring, recordkeeping and coating equipment participating in an averaging regime. The burden of demonstration is on the

owner or operator that there is no significant risk of confounding enforcement, monitoring, recordkeeping, and equipment activities between the lines.

**(b)** **Dual averaging regimes:** A facility which has received such a subsection e.(5)(a) exemption has the option of running each separated line using an averaging regime. However, all requirements of this rule must be complied with by each separated line.

**(6)** **Declaration of averaging:** On any day of a Control Officer presence at a facility permitted to average, the owner or operator shall correctly announce without delay whether an averaging regime is currently in effect, and on an averaging day shall also forthwith supply a listing of each coating participating in the averaging formula, along with the VOC content and the coating category of each.

**f.** **Recordkeeping and monitoring:** In addition to the requirements of Section 501 of this rule, an owner or operator shall do the following:

**(1)** **Daily list the components:** Prior to applying any coating on an averaging day, a list shall be made of each coating name/code to be used that day in the averaging formula and its expected VOC content as applied. This list shall be available to the Control Officer without delay.

**(2)** **Daily calculation deadline:** After each day using averaging, an owner or operator shall determine the results of averaging for that completed production day by midday on the next workday. These results shall be put into hardcopy in the same format that the owner or operator used in the approved application questionnaire. Some other format may be used if the Control Officer has given the format approval before beginning averaging.

**(3)** **Log in:** An owner or operator shall arrange and keep the hardcopy results of each day's averaging in a form that allows the results of each averaging day within the 13 months prior to a Control Officer visit to be accessed by the Control Officer without delay.

**(4)** **Content of weekly summary of production-coating:** By the end of the first shift of the workweek, totals for the workweek just completed shall be compiled as follows:

**(a)** For each model and color, the total number of furniture pieces coated;

**(b)** The name and quantity applied for each stain, washcoat, basecoat, sealer, topcoat, and diluent recorded. The quantity of stain shall be expressed in liters; the quantity of the other coatings expressed in kilograms;

**(c)** The VOC content for each such coating and diluent, expressed in kg VOC/kg solids; and the non-precursor organic compound (NP) content of each, expressed either in kg NP/kg solids or kg NP/kg coating-including-NP shall be recorded, except that the VOC content of each stain shall be expressed in kg VOC per liter of coating, including any water or non-precursors.

**(d)** **Monthly totals for non-averaged coatings:** For coatings that do not participate in the averaging formulas, the total kilograms used shall be updated monthly. Coatings of the same type may be totaled together under a single VOC-content value if their VOC contents are within ± 2% of that value.

**(5)** **Handling unavoidable data loss and data processing equipment malfunctions:** An owner or operator shall put an accounting system in continual effect that allows the retrieval or reconstruction of data. When data required by this rule is lost, the Control Officer shall be notified forthwith and such data shall be reconstructed and due calculations completed within two facility workdays. The Control Officer may request that a hardcopy of the retrieved information be provided him/her by the same clock time, two workdays hence.

**(6)** **Report submittal schedule:**

**(a)** **Semi-annual reports:** An owner or operator shall submit a summary of the records, including all exceedances, by July 20 for the first half of the year and by January 20 of the following year for the second half. Included shall be certified data sheets for coatings whose VOC content is determined by the supplier and not directly by the facility, and a statement that the coatings for which certified data sheets are submitted were the coatings actually used. All the foregoing shall be certified to and signed by a responsible official of the facility.

**(b)** **Initial compliance report:** Within 60 days after the third day ever of averaging, an owner or operator shall submit a report to the Control Officer containing all the elements required by subsection f.(6)(a) above.

**g.** **Test procedures and requirements:**

**(1)** An owner or operator shall cause to be performed EPA Method 24 tests on a sample of each coating intended to be used in an averaging regime, prior to using such coating in any averaging regime. These samples shall be taken at three levels of dilution: prior to adding any diluent; with the minimum weight of solvent/diluent typically used; and with the maximum weight of solvent/diluent expected ever to be needed.

**(2)** An acetone determination shall be made in conjunction with Method 24 using EPA Method 311 or other method approved by EPA at the three dilution levels stipulated in subsection g.(1).

**(3)** **The status of Certified Product Data Sheets:** After the initial Method 24 tests pursuant to subsection g.(1), an owner or operator may substitute the specific certified product data sheet, based on Method 24, for any coating for any of the three levels of dilution stipulated in subsection g.(1), in lieu of directly overseeing the Method 24 tests.

**(a)** However, a certified product data sheet is not valid and shall not be submitted if it is neither for a dilution level in subsection g.(1) nor for the actual dilution level of a coating as applied during averaging.

**(b)** When the results of a Method 24 test, performed pursuant to a Control Officer initiative or directive, differ from the certified product data sheet, the Control Officer may require an owner or operator to have Method 24 tests conducted at a testing facility agreed to by the Control Officer and may require that the results of such tests be the values used in calculating averages.

**h.** **Sanctions:**

**(1)** If an exceedance of the limits of an averaging formula is determined to be in violation of this rule, at least two violations may be charged: at least one violation for exceeding the limits in subsection 301.1 and a separate violation for exceeding the limit determined by the averaging formula in Section i. of this Appendix. Unless the Control Officer chooses otherwise, the number of violations issued for an exceedance of an averaging limit shall be one greater than the number of exceeding coatings participating in the averaging formula. Each day the average is exceeded will be counted as a separate incident.

**(2)** **Continuance:** The Control Officer may disallow an owner or operator the continuance of averaging at a facility which has failed to comply with one or more provisions of this Appendix on three separate days in any period of 12 consecutive months, or which has been found guilty of a major violation of such provisions, except as prohibited by other rule or statute.

**i.** **Two averaging formulas:** The following are the two mathematical formulas from which one may be chosen to be used for an averaging regime.

**(1)** **If topcoats consistently average less than 0.72 kg VOC per kg solids on a mass solid basis, an owner or operator may use Formula 1.**

$$\sum_{i=1}^{n} 0.72(TC_i) \geq \sum_{i=1}^{n} ER_{TC_i}(TC_i) \quad \textbf{Formula 1}$$

**(2) For other coating systems using averaging, Formula 2 shall be used.**

$$\sum_{i=1}^{n} 1.62(TC_i) + 1.71(SE_i) + 8.1(WC_i) + 1.08(BC_i) + 0.712(ST_i) \geq$$

$$\sum_{i=1}^{n} ER_{TC_i}(TC_i) + ER_{SE_i}(SE_i) + ER_{WC_i}(WC_i) + ER_{BC_i}(BC_i) + ER_{ST_i}(ST_i) \quad \textbf{Formula 2}$$

**where:**

| | | |
|---|---|---|
| $N$ | = | number of finishing materials participating in averaging; |
| $TC_i$ | = | kilograms of solids of topcoat *i* used; |
| $SE_i$ | = | kilograms of solids of sealer *i* used; |
| $WC_i$ | = | kilograms of solids of washcoat *i* used; |
| $BC_i$ | = | kilograms of solids of basecoat *i* used; |
| $ST_i$ | = | liters of stain *i* used (water and any non-precursor content are not subtracted); |
| $ER_{TC_i}$ | = | VOC content of topcoat *i* in kg VOC/kg solids, as applied; |
| $ER_{SE_i}$ | = | VOC content of sealer *i* in kg VOC/kg solids, as applied; |
| $ER_{WC_i}$ | = | VOC content of washcoat *i* in kg VOC/kg solids, as applied; |
| $ER_{BC_i}$ | = | VOC content of basecoat *i* in kg VOC/kg solids, as applied; and |
| $ER_{ST_i}$ | = | VOC content of stain *i* in kg VOC/liter, as applied. |

**j. Pre-RACT coating use is limited:** If a coating was used before 1993, and is still used for the same purposes, and it had a VOC content then which is lower than the neutral point for that coating type, then that coating may only be used in the averaging equation if the coating is now lower in VOC than before 1993. If that coating is used in averaging, the left side of the averaging formula must reflect the pre-RACT VOC content and not the current RACT neutral point for that type of coating. To effect this, additional mathematical terms must be added, one on the left and one on the right side of the formula. For example, if one can prove one used a high solids topcoat at 1.5 kg VOC/kg solids before 1993 (the year regulation negotiations began) and now thin the same product less so that it is consistently less than 1.5 kg/kg, one can enter it as a separate term. It appears in the formula below as "1.5(TU)" where "TU" stands for the total kilograms of solids of this unique topcoat used during an averaging day. "TU" appears on both sides of the inequality sign. ERu is the actual VOC content that was in this unique topcoat on a particular averaging day. Along with this, the meaning of the term (TCi) becomes slightly altered to mean the total topcoat solids used of every other topcoat beside the unique topcoat "U":

$$\sum_{i=1}^{n} 1.62(TC_i) + 1.5(TU) + 1.71(SE_i) + 8.1(WC_i) + 1.08(BC_i) + 0.712(ST_i) \geq$$

$$\sum_{i=1}^{n} ER_{TC_i}(TC_i) + ER_U(TU) + ER_{SE_i}(SE_i) + ER_{WC_i}(WC_i) + ER_{BC_i}(BC_i) + ER_{ST_i}(ST_i)$$

Similarly, any other unique coatings that meet such requirements and are used in averaging must each have its own set of two terms inserted into the averaging formula. Moreover, once a pre-RACT coating is used in averaging, the term for its VOC content must stay in the equation as long as that pre-RACT coating is used, even if one later needs to raise the VOC content of the pre-RACT coating to a level above its historical VOC content.

## APPENDIX B -- A SHORT-FORM OPTION

**a.** **Applicability:** This Appendix B to Rule 342 only applies to operators of facilities which have a permit or permit modification limiting VOC emissions from all wood furniture and millwork coating to less than 10 tons, and the permit or Control Officer states in writing that this Appendix B applies. For those facilities for which this Appendix B does apply, no provisions within Sections 301 through 501, inclusive, shall be used to substitute for provisions in this Appendix B. Facilities subject to this Appendix B are also subject to all of Sections 100, 200, and 502.

**b.** **Definitions:** For the purposes of this Appendix B, the following definition shall apply:

**(1)** **MINUS EXEMPT MATERIALS (MINUS EXEMPTS) -** Means the same as "less water and non-precursor organic compounds" in specifying VOC content.

**c.** **VOC Limits for Topcoats and Sealers**

**(1)** **The Principal VOC Limits –** Meet either the lbs VOC/lb solids limit or the lbs VOC/gal, minus exempts, limit: **All sealers and topcoats**: **2 lbs VOC/lb** OR **5.45 lb VOC/gal**

**(2)** **VOC Tradeoff Options:** These 2 options each requires special conditions.

**(a)** **Low VOC topcoat with Higher VOC Sealer:**
Low VOC topcoat: 0.8 lb/lb OR 3.83 lb/gal limit for topcoat.
Higher VOC sealer: no VOC limit for sealer under such topcoat.

**(b)** **One-step finish:**
Higher VOC combination sealer and topcoat: **3 lb/lb** OR **6.0 lb/gal limit.**

The 2 Conditions:

I. A single wet application of either sealer or topcoat (not both)

II. Thickness of the dry finish cannot exceed 3 dry mils, as determined by the test method in subsection 502.3.

**d. Spray Method Requirements:**

**(1) Have guns with higher transfer**: If you spray coating having over 1 lb VOC/lb you must use and have in evidence for an inspector at least one of the following onsite:

- Low pressure gun with less than 12 psig at tip. Examples: pure HVLP gun; a turbine gun.
- Airless; includes air-assisted airless.
- An electrostatic system.

**(2) Green Tag Option –** Restriction on conventional guns and other restricted use guns:

**(a) Green Tag Requirements:** A conventional air-atomized or other restricted use gun shall have a durable and visible green tag, sticker, or painted emblem, no less than 4 square inches in area on the gun or within 3 ft of the gun on the gun's hose, or the facility is in violation. *But,* such a tag is not required at a facility having and using only coatings which contain less than 1 lb VOC/lb solids as applied. Coatings which have less than 4.30 lb VOC/gal (515 g/l) minus exempt materials also meet this requirement.

**(b) Prohibition:** No coating over 1 lb VOC/lb solids may be applied with a conventional air-atomized or other restricted use gun. This prohibition includes, but is not limited to, traditional lacquers, washcoats, and low-solids stains. ("Conventional air-atomized gun" is defined in Section 208. "Restricted use gun" is defined in Section 225.)

**(3) Exemptions From VOC and Spray-Method Limits**: Prepackaged aerosol spray in cans under 22 fl. oz., faux & metal-leaf finish are exempt from Appendix B's subsections c.(1) and (2) and d.(1) and (2) as is any refinishing operation necessary for preservation, to return furniture to original condition, to replace missing furniture items to complete a matching set, or to produce custom replica furniture. But nothing exempted by the previous sentence is exempt from inventory of VOC emissions or from other provisions of this Appendix B.

**e. Housekeeping Functions:**

**(1) Keep Coatings, Cleaners, & Waste-materials Covered:** Coatings and cleaners not in use, as well as waste coatings, cleaning materials including solvent-dipped rags, and solvent used to clean spray equipment must be collected into a closed container or a container which is closed immediately after receiving such material.

**(2)** **Booth Cleaning:** If booth/components other than *metal* filters are cleaned with solvent, no solvent which is more than 3.8 lb/VOC per gallon (455 g/l) shall be used. However, up to 1 gallon of solvent over 3.8 lb VOC/gal may be used for cleaning a booth as part of replacing coating on the booth.

**f.** **Records:** Keep a list of all VOC containing material with the name and amount of VOC in each: Express VOC content either as lb/lb or lb/gal. For topcoat and sealer contents which are expressed in lb VOC/gal, this must be minus water and non-precursors.

**(1)** **If you ever do your own reducing or thinning of a sealer or topcoat**:
Keep a list of the maximum VOC content of any material after you thin it or add any additives at your facility.

**(2)** **Keep receipts for 5 years** of the amount received for each VOC-containing material *and* of the amount of all VOC-*waste materials* sent for recycling or hazardous waste collection.

**(3)** **What To Record And How Often:** Record the amount in the following 4 categories, (a) to (d), noting either the amount "used" or the amount "received" since your last records update:

**(a)** All coatings including topcoats, sealers, stains, etc., including all parts, catalysts, activators, additives, hardeners; (*not* reducers). If you use conventional guns at all, total *separately* the coatings having less than 1 lb VOC/lb;

**(b)** All reducers and diluents to be used for reducing or diluting coatings (not cleaning);

**(c)** All solvents, strippers, thinners, and VOC-containing materials used for cleaning and cleanup (not reducing); and

**(d)** All other VOC containing materials connected with wood coating. Omit janitorial & building maintenance.

**(e)** **How Often to Update Your Records:** Update the above items in (a), (b), (c), and (d) weekly if your total monthly *use* of all coatings and diluents [(a) + (b)] is 250 gallons or more. Otherwise, update monthly. You may record just once a year those types of materials you use less than 15 gallons of.

**Example**: I use 5 kinds of graining ink. Added all together, I use 14 gallons of all graining ink combined: I only have to update my graining inks once a year.

## APPENDIX C TO RULE 342

## ALTERNATIVE COMPLIANCE WITH SECTION 301 VOC-LIMITS

**AND/OR SECTION 302 SPRAY-METHOD RESTRICTIONS**
**BY USING AN EMISSIONS CONTROL DEVICE**

**a.** **Eligibility:** A person is allowed to meet the VOC limits of either or both subsections 301.1 and 301.2 by using an ECS which reduces VOC emissions overall, including capture and processing, by at least 81 percent by weight. Such an ECS may also be used to comply with subsection 302.2 spray method provisions.

**b.** **Operation and Maintenance (O&M) Plan Required for ECS:**

**(1)** The owner or operator of an emission control system (ECS) used to meet the requirements of Section 301 of this rule shall provide the Control Officer with an Operation and Maintenance (O&M) Plan. This O&M Plan shall specify key system operating parameters, such as temperatures, pressures and/or flow rates, necessary to determine compliance with this rule, and describe in detail procedures and their frequency of implementation needed to maintain the ECS.

**(2)** The Control Officer's written approval of the O&M Plan is required. The owner or operator shall consistently implement all provisions of the O&M Plan.

**(3)** **Changes in frequency:** Changes involving reduction in the frequency or extent of procedures or parameters in a Control Officer-approved O&M Plan shall have the written consent of the Control Officer prior to being implemented.

**(4)** **Other Changes:** An updated O&M Plan must be submitted to the Control Officer for review within 10 days of any changes not involving reduction in frequency or extent of procedures or parameters of an approved O&M Plan. Within five working days of a written disapproval of such changes, either the original O&M Plan shall be reinstituted or an alternative plan, negotiated with the affected facility and approved in writing by the Control Officer, shall be instituted.

**c.** **Providing And Maintaining ECS Monitoring Devices:** Any person operating an emission control system (ECS) pursuant to subsection 301.3 of this rule shall install, maintain, and calibrate monitoring devices described in the O&M Plan submitted to the Control Officer pursuant to subsection b. of this appendix. The monitoring devices shall measure temperatures, pressures, rates of flow, or other operating conditions necessary to determine if air pollution control equipment is functioning properly.

**(1)** **ECS Operation and Maintenance Records:** On each day that an ECS is used to comply with Section 301 of this rule, an owner or operator shall make a permanent record of the operating parameters of the key systems described in the O&M Plan. For each day or period in which the O&M Plan requires that maintenance be performed, a permanent record shall be made of the maintenance actions taken, within 24 hours of maintenance completion. An explanation shall be

entered for scheduled maintenance that is not performed during the period designated in the O&M Plan.

**(2)** **Other Records Required When Complying Via ECS:** An owner or operator choosing to meet the requirements of Section 301 through the use of an ECS shall maintain, in addition to the monthly records required by subsection 501.2:

**(a)** Daily documentation showing the VOC content of the finishing material, as applied, in pounds VOC/pound solids when solvent or other VOC is added to the finishing material before application.

**(b)** Daily records showing the amount of coating, the amount of catalyst/hardener, and the amount of solvent, reducer, and/or diluent used.

**d.** **Compliance Schedule For ECS**: An owner or operator of a furniture coating facility shall have such facility in compliance per the following schedule. Total VOC emissions is the total VOC from all wood coating operations and associated cleaning processes. It includes millwork coating.

**(1)** **Sources Emitting 50 TPY:** Full compliance with all applicable requirements of this rule shall be by November 15, 1996, if such facility has applied for or received a Title V permit, its permit has a VOC-emissions limit of 50 tons or more, or which has had an aggregate VOC emission to atmosphere after December 31, 1989, of 50.0 tons (45.35 Mg) or more in any calendar year or 300 pounds (136 kg) or more in any day. In addition, an owner or operator shall provide the Control Officer with:

**(a)** Both proof of a binding contract for an ECS and a compliance plan by June 3, 1996, listing dates of completion of increments of progress toward meeting the requirements of subsection 301.3 of this rule.

**(b)** An O&M Plan for the ECS by November 15, 1996.

**(2)** **Other Sources:** A facility shall be in compliance with Section 302 by November 15, 1996 and with Section 301 by January 15, 1997 if its total VOC in each of the years 1990 through 1995 of less than 300 pounds (136 kg) in any day and 50.0 tons (45.35 MG) in any calendar year. In addition, the owner or operator shall provide the Control Officer with:

**(a)** Both proof of a binding contract for an ECS and a compliance plan by June 3, 1996, listing the dates of completing the increments of progress toward meeting the requirements of the subsection 301.3; and

**(b)** An O&M Plan for the ECS by January 2, 1997.

**e. Test Methods for an ECS**

**(1)** Control efficiency of an emission control device used to meet the requirements of Section 301 shall be determined according to EPA Reference Method 25 or an applicable submethod of Method 25 (Title 40, CFR Part 60, Appendix A).

**(2)** EPA Method 18 shall be used if specified by the Control Officer when a non-precursor organic compound is present in the input of a control device used to meet the requirement of Section 301.

**(3)** Capture efficiency of an emission control device used to meet the requirements of Section 301 shall be determined by mass balance in combination with ventilation/draft rate determinations done in accordance with subsection e.(4), following, or according to "Guidelines for Determining Capture Efficiency" January 9, 1995, Candace Sorrell, Source Characterization Group A, Office of Air Quality Planning and Standards, US EPA. This EPA document is available at ~~2406 South 24 Street, Suite E-214, Phoenix, Arizona, 85034,~~ the Maricopa County Air Quality Department, 1001 N. Central Ave., Phoenix, Arizona, 85004. ~~or call (602) 506-6700 for information.~~

**(4)** Ventilation/draft rates of an emission control device used to meet the requirements of Section 301 shall be determined by EPA Methods 2, 2A, 2C, or 2D.

## REGULATION III - CONTROL OF AIR CONTAMINANTS

## RULE 343
## COMMERCIAL BREAD BAKERIES

### INDEX

**SECTION 100 – GENERAL**

101 PURPOSE

102 APPLICABILITY

**SECTION 200 – DEFINITIONS**

201 AFFECTED FACILITY

202 APPROVED EMISSION CONTROL SYSTEM

203 AVERAGE DAILY EMISSIONS

204 BASE YEAR

205 BREAD

206 CONTROL PLAN

207 EXISTING OVEN
208 LEAVEN
209 NEW OVEN
210 OVEN
211 PROOF BOXES
~~212 VOLATILE ORGANIC COMPOUND~~

**SECTION 300 – STANDARDS**
301 LIMITATIONS - EXISTING BAKERY OVENS
302 LIMITATIONS - NEW OR MODIFIED BAKERY OVENS
303 OPERATION AND MAINTENANCE (O&M) PLAN

**SECTION 400 - ADMINISTRATIVE REQUIREMENTS**
401 COMPLIANCE SCHEDULE
402 INFORMATION REQUIRED TO BE INCLUDED IN AN EMISSION CONTROL PLAN
403 EFFECTIVE DATE

**SECTION 500 - MONITORING AND RECORDS**
501 PROVIDING AND MAINTAINING MONITORING DEVICES
502 RECORDKEEPING AND REPORTING
503 RECORDS RETENTION
504 COMPLIANCE DETERMINATION - TEST METHODS

**Adopted 02/15/95**
**Revised 09/25/13**

**MARICOPA COUNTY**
**AIR POLLUTION CONTROL REGULATIONS**

**REGULATION III - CONTROL OF AIR CONTAMINANTS**
**RULE 343**
**COMMERCIAL BREAD BAKERIES**

**SECTION 100 - GENERAL**

**101** **PURPOSE:** To limit the emission of volatile organic compounds (VOCs) from bread ovens at commercial bread bakeries.

**102** **APPLICABILITY:** The provisions of this rule shall apply only to commercial bread bakeries whose total VOC emissions exceed 25 tons per year after December 31, 1989. This rule shall not

apply to any facility or equipment used exclusively for the production of bakery products leavened chemically in the absence of yeast.

**SECTION 200 – DEFINITIONS:** For the purpose of this rule, the following definitions shall apply~~:~~, in addition to those definitions found in Rule 100 (General Provisions and Definitions) of these rules. In the event of any inconsistency between any of the Maricopa County air pollution control rules, the definitions in this rule take precedence.

**201** **AFFECTED FACILITY -** With reference to a stationary source, any apparatus to which a standard is applicable.

**202** **APPROVED EMISSION CONTROL SYSTEM -** A system for reducing emissions of organic compounds, consisting of both collection and control devices which are approved in writing by the Control Officer and are designed and operated in accordance with good engineering practice.

**203** **AVERAGE DAILY EMISSIONS -** The product of the total calendar year emissions divided by the number of days the oven was employed for production during that year.

**204** **BASE YEAR -** The calendar year 1990 or any subsequent calendar year in which the average daily emissions equal or exceed 192 lbs. or more per day.

**205** **BREAD -** A perishable foodstuff prepared from yeast-leavened dough whose primary ingredients are flour, water, and yeast which is baked into loaves, buns, or rolls.

**206** **CONTROL PLAN -** A written report describing the method to be used to achieve full compliance. The control plan shall, at a minimum, contain all information required in Section 402 of this rule.

**207** **EXISTING OVEN -** Any oven which was installed before May 1, 1995.

**208** **LEAVEN -** To raise a dough by causing gas to thoroughly permeate it through the use of a fermentation-producing agent such as yeast or baking powder.

**209** **NEW OVEN -** Any oven which was installed on or after May 1, 1995.

**210** **OVEN -** A chamber used to bake by means of heat, typically from the combustion of natural gas or propane. This does not include proof boxes.

**211** **PROOF BOXES -** A warm, typically 100° Fahrenheit, humid chamber where yeast leavened dough is allowed to rise to the volume desired for baking.

~~Note[1] —212~~ ~~**VOLATILE ORGANIC COMPOUND (VOC)**~~ - ~~Any organic compound, excluding the following organic compounds which have been designated by the EPA as having negligible photochemical reactivity.: methane; ethane; methylene chloride (dichloromethane); 1,1,1-trichloroethane; trichlorofluoromethane (CFC-11); dichlorodifluoromethane (CFC-12); chlorodifluoromethane (CFC-22); 1,1,2-trichlorotrifluoroethane (CFC-113); 1,2-dichlorotetrafluoro ethane (CFC-114); chloropentafluoroethane (CFC-115); trifluoromethane (CFC-23); 2,2-dichloro-1,1,1-trifluoroethane (HCFC-123); 2-chloro-1,1,1,2-tetrafluoroethane (HCFC-124); 1,1-dichloro-1-fluoroethane (HCFC-141b); 1-chloro-1,1-difluoroethane (HCFC-142b); pentafluoroethane (HFC-125); 1,1,2,2-tetrafluoroethane (HFC-134); 1,1,1,2-tetrafluoroethane (HFC-134a); 1,1,1-trifluoroethane (HFC-143a); 1,1-difluoroethane (HFC-152a); parachlorobenzotrifluoride (PCBTF); cyclic, branched, or linear completely methylated siloxanes; all completely fluorinated, completely saturated: alkanes, ethers and tertiary amines; sulfur-containing perfluorocarbons with no unsaturations, no hydrogen, and with sulfur bonds only to carbon and fluorine.~~

**SECTION 300 - STANDARDS**

**301** **LIMITATIONS - EXISTING BAKERY OVENS:** On or after November 15, 1995, no person shall use an existing oven, with annual VOC emissions of 25 tons and/or a base year average daily VOC emissions of greater than 192 lbs., unless the VOC emissions from the oven are reduced by at least 81 percent. This may be accomplished through the use of an approved emission control device or bread-making and/or baking process changes.

~~Note[2] —~~**302** **LIMITATIONS - NEW OR MODIFIED BAKERY OVENS:** No person shall operate a new or modified oven with potential, annual VOC emissions of 25 tons and/or average daily VOC emissions of 192 lbs., unless the VOC emissions from the oven are reduced by at least 81 percent. This may be accomplished through the use of an approved emission control device or bread-making and/or baking process changes. A person choosing to comply with this rule through the use of bakery process changes shall use a VOC E.F. value of 5.5 pounds per ton (Reference Figure 1.)

**303** **OPERATION AND MAINTENANCE (O&M) PLAN:** The owners or operators of an approved emission control system used to meet the requirements of this rule shall provide the Control Officer with an O&M Plan. This Plan shall specify key system operating parameters, such as temperatures, pressures and/or flow rates, necessary to determine compliance with this rule and describe in detail procedures to maintain the approved emission control system. The Control

---

~~[1] This note is not part of Rule 343, but is included for the reader's convenience. The current list of exempt organic compounds is in Rule 100, Section 200, in the definition of Non-Precursor Organic Compound.~~

~~[2] This note is not part of Rule 343, but is included for the reader's convenience. An "approved emission control device" is the same as an "approved emission control system" as defined in Section 202 of this rule. The abbreviation "E.F." means "emission factor".~~

Officer's written approval of this Plan and the implementation of this Plan shall be required for compliance with this rule to be achieved.

**SECTION 400 - ADMINISTRATIVE REQUIREMENTS**

~~**Note**~~[3] **401 COMPLIANCE SCHEDULE:**

**401.2** By May 1, 1995, any person subject to Section 301 shall submit for the Control Officer's approval an emission control plan describing the method to be used to achieve full compliance by November 15, 1995. The plan shall, at a minimum, include all information required in Section 402 of this rule. The Control Officer may require a person submitting such emission control plan to submit subsequent reports on progress in achieving compliance.

**402 INFORMATION REQUIRED TO BE INCLUDED IN AN EMISSION CONTROL PLAN:**

**402.1** Name(s), address(es), and phone number(s) of the owner of the bakery, of person(s) responsible for the preparation, submittal and implementation of the emission control plan and of person(s) responsible for the baking operations; and

**402.2** Complete and accurate calculations of the bakery's base year total VOC emissions from each affected oven by following emissions inventory calculations provided by the equation in Figure 1; and

**402.3** Complete and accurate calculations of the bakery's total VOC emissions from each affected oven after the proposed breadmaking and/or baking process changes found in the emission control plan. These calculations shall be done by following the emissions inventory estimation provided by the equation in Figure 1. The emission control plan shall demonstrate that the reduction in emissions is a result of the breadmaking and/or proposed baking process changes' effect on the variables in the equation in Figure 1; or

**402.4** Complete and accurate calculations of the bakery's total VOC emissions from each affected oven based on the proposed emission control system described in the emission control plan. The emission control plan shall also specify dates for completing increments of progress, such as the contractual arrival date of new control equipment.

**403 EFFECTIVE DATE:** The provisions of this rule shall become effective on May 1, 1995.

**SECTION 500 -MONITORING AND RECORDS**

**501 PROVIDING AND MAINTAINING MONITORING DEVICES:** Any person operating an approved emission control system pursuant to this rule shall properly install and maintain in

[3] ~~This note is not part of Rule 343, but is included for the reader's convenience. There is a formatting error: there is no subsection 401.1; subsection 401.2 should be simply Section 401.~~

calibration, in good working order and in operation, devices described in an approved O&M Plan for indicating temperatures, pressures, rates of flow, or other operating conditions necessary to determine if air pollution control equipment is functioning properly and is properly maintained.

**502** **RECORDKEEPING AND REPORTING:** Any person subject to this rule shall maintain records which comply with the following requirements. Any records required by this rule shall be kept in a legible, consistent and complete manner.

**502.1** Records for operation and maintenance of an approved emission control system shall include a record of the times an approved emission control system is operating, daily records of the O&M Plan's key system operating parameters and a log of all maintenance performed according to the O&M Plan.

**502.2** Records for the institution shall include:

**a.** Formula number;

**b.** Initial baker's percent of yeast, Yi (nearest one-tenth of a percent);

~~**Note**~~[4]

**c.** Total ferment time (in hours, nearest one-tenth of an hour - begins with first mixing of yeast with the dough or sponge);

**d.** Yeast spike as baker's percent of yeast (nearest one-tenth of a percent);

**e.** Spike time (in hours, nearest one-tenth of an hour);

**f.** Ethanol emission factor (lbs/ton);

**g.** Daily records of production (tons) and corresponding formula;

**h.** Quarterly records of ethanol emissions (tons).

**503** **RECORDS RETENTION:** Copies of control plans, operation and maintenance records and any other documentation required by this rule shall be retained by the permittee for at least three years.

**504** **COMPLIANCE DETERMINATION - TEST METHODS:** When more than one test method is permitted for a determination, an exceedance of the limits established in the rule determined by any of the applicable test methods constitutes a violation of this rule.

---

~~4 This note is not part of Rule 343, but is included for the reader's convenience. Total ferment time ends at the time the bread enters the oven, as does spike time, also.~~

**504.1** Measurements of VOC emissions subject to Section 301 and 302 of this rule shall be conducted in accordance with EPA Methods 18 and/or 25 and/or its submethods (40 CFR 60, Appendix A).

**504.2** Ventilation/draft rates shall be determined by EPA Methods 2, 2a, 2c, and 2d. Figure 1

Figure 1

$$\text{VOC E.F.} = .95Yi + .195ti - .51S - .86ts + 1.90$$

where VOC E.F. = pounds of VOC per ton of baked bread
Yi = initial baker's percent of yeast to the nearest tenth of a percent
ti = total yeast action time in hours to the nearest tenth of an hour
S = final (spike) baker's percent of yeast to the nearest tenth of a percent
ts = spiking time in hours to the nearest tenth of an hour

~~Last Formatted - Fall 1997~~

**REGULATION III - CONTROL OF AIR CONTAMINANTS**

**RULE 344**
**AUTOMOTIVE WINDSHIELD WASHER FLUID**

**INDEX**


**SECTION 100 – GENERAL**
101 PURPOSE
102 APPLICABILITY

**SECTION 200 – DEFINITIONS**
201 AUTOMOTIVE WINDSHIELD WASHER FLUID (WINDSHIELD FLUID)
202 LABEL
~~203 NON-PRECURSOR ORGANIC COMPOUND~~
~~204~~ 203 PERCENT BY WEIGHT
~~205 VOLATILE ORGANIC COMPOUND (VOC)~~

**SECTION 300 – STANDARDS**
301 LIMITATIONS - PERCENT VOC BY WEIGHT
302 EXEMPTION - CONCENTRATED WINDSHIELD FLUID PRODUCTS
303 EXEMPTION - OUTSIDE OF MARICOPA COUNTY

**SECTION 400 - ADMINISTRATIVE REQUIREMENTS ~~(RESERVED)~~ (NOT APPLICABLE)**

**SECTION 500 - MONITORING AND RECORDS**

501 COMPLIANCE DETERMINATION

**APPENDIX TO RULE 344** APPENDIX A

**Adopted 02/15/95**
**Revised 04/03/96**
**Revised 04/07/99**
**Revised 09/25/13**

**MARICOPA COUNTY**
**AIR POLLUTION CONTROL REGULATIONS**

**REGULATION III - CONTROL OF AIR CONTAMINANTS**

**RULE 344**
**AUTOMOTIVE WINDSHIELD WASHER FLUID**

**SECTION 100 – GENERAL**

**101** **PURPOSE:** To limit the emission of volatile organic compounds (VOCs) into the ambient air from automotive windshield washer fluid products.

**102** **APPLICABILITY:** This rule applies to any automotive windshield washer fluid product sold or otherwise distributed within Maricopa County.

**SECTION 200 – DEFINITIONS:** For the purpose of this rule, the following definitions shall apply~~:~~, in addition to those definitions found in Rule 100 (General Provisions and Definitions) of these rules. In the event of any inconsistency between any of the Maricopa County air pollution control rules, the definitions in this rule take precedence.

**201** **AUTOMOTIVE WINDSHIELD WASHER FLUID (WINDSHIELD FLUID) -** Any liquid designed for use in a motor vehicle windshield washer fluid system either as an antifreeze or for the purpose of cleaning, washing, or wetting windshield(s), except any such liquid which is placed in a new motor vehicle at the time the vehicle is manufactured.

**202** **LABEL -** Any written, printed, or graphic matter affixed to, applied to, blown into, formed, molded into, embossed on, or appearing upon any product container or package, for purposes of branding, identifying, or giving information with respect to the product or the contents of the package.

~~**203**~~ ~~**NON-PRECURSOR ORGANIC COMPOUND** - Any of the organic compounds which have been designated by the EPA as having negligible photochemical reactivity. EPA designates such compounds as "exempt." A listing of these compounds is found in Rule 100.~~

~~**204**~~**203** **PERCENT BY WEIGHT -** The total weight of a substance expressed as a percentage of the net weight of the product exclusive of the container or package as calculated according to the following equation:

$$\text{Percent by Weight} = \frac{B \times 100}{A}$$

Where:

A = net weight of unit (excluding container and packaging).

B = weight of VOCs, as defined in Section 205 of this rule.

~~**205**~~ ~~**VOLATILE ORGANIC COMPOUND (VOC)** - Any organic compound which participates in atmospheric photochemical reactions, except non-precursor organic compounds.~~

**SECTION 300 – STANDARDS**

**301** **LIMITATIONS - PERCENT VOC BY WEIGHT:** No person shall sell, offer for sale, or supply in Maricopa County, Arizona any automotive windshield washer fluid product which, at the time of sale, offering, or supply, contains VOCs in excess of ten percent by weight, unless the person can demonstrate that the windshield fluid meets the exemption in Section 302, or the fluid is destined for use outside Maricopa County, as provided for by the exemption in Section 303.

**302** **EXEMPTION - CONCENTRATED WINDSHIELD FLUID PRODUCTS:** A concentrated windshield fluid (concentrate) is exempt from Section 301 of this rule if the label provides all of the following information:

**a.** That the windshield washer fluid is a concentrate;

**b.** That the contents must be diluted prior to use;

**c.** Specific, clearly designated dilution directions;

**d.** That the freezing point of the undiluted product is not described on the label; and,

**e.** That the dilution ratio of the concentrate shall yield a solution that never exceeds ten percent VOC by weight.

**303** **EXEMPTION - OUTSIDE OF MARICOPA COUNTY:** A person may demonstrate that windshield fluid sold, offered for sale or supplied within Maricopa County is destined for use outside Maricopa County by providing the following documents or information:

**a.** A bill of lading, or

**b.** A properly executed, signed transfer agreement, such as a warehouse receipt, orders for the delivery of goods, and any other documents common in such transactions which in the regular course of business or financing are treated as adequately evidencing that the person in possession of it is entitled to receive, hold and dispose of the document and the goods it covers.

**SECTION 400 - ADMINISTRATIVE REQUIREMENTS ~~(RESERVED)~~ (NOT APPLICABLE)**

**SECTION 500 - MONITORING AND RECORDS**

**501** **COMPLIANCE DETERMINATION:** Compliance determination may be demonstrated by either one of the options listed below. Copies of the test method listed in subsection 501.2 and found in Appendix A are available at the Maricopa County ~~Environmental Services~~ Air Quality Department, 1001 ~~North~~ N. Central ~~Avenue~~ Ave., Phoenix, AZ, 85004~~-1942~~.

**501.1** Formulation data based upon written certification from the manufacturer specifying the actual weight percentage of VOCs in the windshield washer fluid.

**501.2** **Test Method:** Maricopa County Reference Method #100, which is entitled: "Total Organic Carbon for Windshield Washer Fluids," as found in Appendix A of this rule.

**~~501.3~~ 502** **CONTESTED RESULTS:** The Control Officer may direct the owner or operator to perform the testing method listed in subsection 501.2 if there is reason to believe that the formulation information is incorrect. If there is an inconsistency between the formulation certification and the actual test method results, the test method shall prevail as the definitive method in all cases.

## APPENDIX A

**Test Method #100 for Determining Total Organic Carbon for Windshield Washer Fluids**

**1.0 APPLICABILITY AND PRINCIPLE**

**1.1** **Applicability.** This method is applicable for the determination of organic carbon in diluted windshield washer fluids.

**1.2** **Principle.** Organic carbon in a sample is converted to carbon dioxide (CO2) by catalytic combustion or wet chemical oxidation. The CO2 formed can be measured directly by an infrared detector or converted to methane (CH4) and measured by a flame ionization detector. The amount of CO2 or CH4 is directly proportional to the concentration of carbonaceous material in the sample.

## 2.0 SENSITIVITY AND INTERFERENCES

**2.1** **Sensitivity.** The method is most applicable to measurement of organic carbon above 1mg/L.

**2.2** **Interferences.** All distilled water used in making and/or diluting the samples must be acidified with concentrated phosphoric acid H3PO4 (1 mL of H3PO4/1 L of water) and purged with inert gas (He, N2...) for at least 30 minutes. Inject this water into the Total Organic Carbon analyzer and determine the total concentration (ppm C) of the blank. This method is sufficient for removing most interferences due to inorganic carbon in the water. Do not purge the sample with an inert gas since purging may result in the loss of volatile organic substances.

## 3.0 APPARATUS

**3.1** **Blender.** Waring-type or similar, for blending or homogenizing samples.

**3.2** **Total Organic Analyzer.** An analyzer capable of measuring carbonaceous material in liquid samples. Consideration should be given to the types of samples to be analyzed, the expected concentration range, and forms of carbon to be measured.

**3.3** **Volumetric Flasks And Volumetric Pipets.** For preparing standard solutions and the windshield washer fluid solutions.

**3.4** **Glass Bottles.** For sample collection and storage.

## 4.0 REAGENTS

**4.1** **Water ($H_2O$).** Distilled water used in preparation of standards and for dilution of samples should be ultra-pure to reduce the carbon concentration of the blank. Carbon dioxide-free, double distilled water is recommended. Ion exchanged waters are not recommended because of the possibilities of contamination with organic materials from the resins.

**4.2** **Potassium Hydrogen Phthalate ($HOOCC_6H_4COOK$), Stock Solution.** 1000 mg carbon/L. Dissolve 0.2128g of potassium hydrogen phthalate (Primary Standard Grade) in distilled water and dilute to 100.0 mL.

**4.3** **Potassium Hydrogen Phthalate, Standard Solutions.** Prepare standard solutions from the stock solution by dilution with distilled water.

**4.4** **Blank Solution.** Use the same distilled water (or similar quality water) used for the preparation of the standard solutions.

## 5.0 SAMPLE PREPARATION

**5.1** Prepare the windshield washer fluid according to the manufacturer's directions.

**5.2** Dilute the windshield washer fluids with $H_2O$ to be within the calibrated range of the instrument before analyzing. Dilutions of 1 to 100 or greater may be necessary before windshield washer solutions can be analyzed.

## 6.0 PROCEDURE

**6.1** Follow instrument manufacturer's instructions for calibration, procedure, and calculations.

**6.2** Calibrate using at least 3 standards. The set of calibration standards should consist of one below the expected concentration, one above the expected concentration, and approximately at the expected concentration.

**6.3** Calculate and report the results as mg C/g sample.

**8.0** **BIBLIOGRAPHY OF REFERENCE DOCUMENTS:** The Control Officer will rely on the following background materials when questions arise in the review and implementation of the test method listed in subsection 501.2:


1. Annual Book of ASTM Standards, Part 31, "Water", Standard D 2574-79, p 469, (1976).

2. Standard Methods for the Examination of Water and Wastewater, 14th Edition, p 532, Method 505, (1975).

3. Method 415.1, Methods for Chemical Analysis of Water and Wastes, Environmental Monitoring and Support Laboratory, USEPA, Cincinnati, OH 45268, EPA 600/4-79-020.

4. Evaluation of Method 415.1 for Off-set Lithographic Solutions, September, 1992.


# REGULATION III - CONTROL OF AIR CONTAMINANTS

## RULE 345
## VEHICLE AND MOBILE EQUIPMENT COATING

**INDEX**

**SECTION 100 – GENERAL**

101 PURPOSE

102 APPLICABILITY

**SECTION 200 – DEFINITIONS**

201 AUTOMATIC GUN-CLEANING MACHINE (GUN CLEANER)

202 AUTOMOBILE/LIGHT DUTY VEHICLE

203 COATING AS APPLIED

204 CONVENTIONAL AIR ATOMIZED SPRAY (SYSTEM)

205 DAY

206 DEPARTMENT

207 DETAILING GUNS AND TOUCH-UP GUNS

208 DILUENT

209 ELECTROSTATIC APPLICATION

210 EMISSION CONTROL SYSTEM (ECS)

211 ENAMEL

~~212 EXEMPT COMPOUND~~

~~213~~ 212 FLEXIBLE PLASTIC

~~214~~ 213 HARDENER

~~215~~ 214 HEAVY TRUCK

~~216~~ 215 HEAVY DUTY VEHICLE

~~217~~ 216 HIGH-VOLUME LOW PRESSURE (HVLP) APPLICATION

~~218~~ 217 LACQUER

~~219~~ 218 LOW PRESSURE GUN

~~220~~ 219 MIXING INSTRUCTIONS

~~221~~ 220 MOBILE EQUIPMENT

~~222~~ 221 MULTI-COLORED TOPCOAT

~~223 NON-PRECURSOR ORGANIC COMPOUND (EXEMPT COMPOUND)~~

~~224~~ 222 PRETREATMENT WASH PRIMER

~~225~~ 223 PRIMER

~~226~~ 224 PRIMER-SEALER

~~227~~ 225 PRIMER-SURFACER

~~228~~ 226 REDUCER

~~229~~ 227 REFINISH, REFINISHING

~~230~~ 228 SINGLE-STAGE TOPCOAT

~~231~~ 229 SPECIALTY COATING

~~232~~ 230 SPOT REPAIR ON A HEAVY TRUCK
~~233~~ 231 SURFACE PREPARATION AND SURFACE CLEANING FLUIDS
~~234~~ 232 STRIPPERS
~~235~~ 233 THINNER
~~236~~ 234 THREE-STAGE TOPCOAT
~~237~~ 235 TOPCOAT
~~238~~ 236 TOUCH UP COATING
~~239~~ 237 TWO-STAGE TOPCOAT
~~240~~ 238 VEHICLE REFINISHING COATING COMPONENT
~~241~~ 239 VEHICLE REFINISHING OPERATION
~~242~~ 240 VOC CONTENT
~~243 VOLATILE ORGANIC COMPOUND (VOC)~~

**SECTION 300 – STANDARDS**

301 LIMITATIONS: VOC CONTENT OF REFINISH COATINGS FOR LIGHT DUTY VEHICLES
302 REFINISHING HEAVY DUTY TRUCKS AND TRUCK-TRAILERS
303 COATING NEW SURFACES & REFINISHING HEAVY VEHICLES
304 MIXING REQUIREMENTS
305 PREPARATION AND SURFACE-CLEANING FLUIDS
306 MAINTENANCE
307 PAINT GUN REQUIREMENTS AND LIMITS
308 EMISSION CONTROL SYSTEM
309 CLEANUP AND CLEANING SUPPLY AND APPLICATION EQUIPMENT
310 GUN CLEANING MACHINES
311 STORAGE AND DISPOSAL OF VOC AND VOC-CONTAINING MATERIAL
312 EXEMPTIONS

**SECTION 400 - ADMINISTRATIVE REQUIREMENTS**

401 ECS SCHEDULE
402 THE RESPONSIBILITIES OF LARGE USERS
403 JOBBERS/SUPPLIERS RECORDKEEPING RESPONSIBILITY FOR REFINISHES
404 WEIGHT EXCLUSION

**SECTION 500 - MONITORING AND RECORDS**

501 RECORDKEEPING AND REPORTING
502 COMPLIANCE DETERMINATION
503 FORMULAS

504 EMISSION CONTROL SYSTEM (ECS) AND RELATED SYSTEM OPERATING REQUIREMENTS

505 TEST METHODS ADOPTED BY REFERENCE

**Adopted 02/15/95**

**Revised 11/20/96**

**Revised 04/21/99**

**Revised 09/25/13**

**MARICOPA COUNTY**

**AIR POLLUTION CONTROL REGULATIONS**

**REGULATION III - CONTROL OF AIR CONTAMINANTS**

**RULE 345**

**VEHICLE AND MOBILE EQUIPMENT COATING**

**SECTION 100 – GENERAL**

**101 PURPOSE:** To limit emissions of volatile organic compounds (VOCs) from the surface preparation and coating of highway vehicles and mobile equipment.

**102 APPLICABILITY:**

**102.1** The provisions of this rule apply to the coating of any vehicle or mobile equipment able to travel or be drawn upon a highway, except for Original Equipment coatings at light-duty vehicle manufacturing plants. A summary is provided by the following directory:

**DIRECTORY OF THE REGULATIONS THAT APPLY TO NEW FINISHES & TO REFINISHES**

| **Type of Vehicle** | **Applicable Regulation for Original Equipment Coating and Coating on Never-Coated Surface** | **Applicable Regulation for Refinishing** |
|---|---|---|
| Car, pickup, minivan, & light-duty utility vehicle, or their chassis, produced on large assembly lines; i.e., included by code #33611 in NAICS, as incorporated by reference in subsection 505.3. | New Source Performance Standard for cars & light-duty vehicles made on assembly lines, subpart MM, 40 CFR 60, as incorporated by reference in Rule 360. | Table 1 (of this rule) (vehicle bodies, cabs, and chassis only) |
| Car, pickup, minivan, or light-duty utility vehicle NOT produced on large assembly lines; all motorcycles and golf-carts. | Table 3 (of this rule) | Table 1 (vehicle bodies, cabs, and chassis only) |

| | | |
|---|---|---|
| All vehicles that qualify as "heavy trucks", as defined by §215 of this rule, (buses, large trucks, tractor/trailers, etc.) | Table 3 | Table 2<br>(of this rule)<br>(vehicle bodies, cabs, chassis & their trailers) |
| All heavy duty vehicles that do not qualify as "heavy trucks", and all mobile equipment | Table 3 | Table 3<br>except for pretreatment wash |
| *Small never coated surfaces on a coated vehicle being refinished are subject to Table 2 or §302.3. | | |

**102.2 Non-Applicability:**

**a.** This rule does not apply to materials that contain 2.0% or less VOC by either weight or volume, or have less than 0.17 lbs VOC per gallon (20 g/liter) material VOC content, as determined by the formula in subsection 503.3.

**b.** This rule does not apply to the coating of separate vehicle parts or mobile equipment parts that have never been installed since manufacture or remanufacture, unless they are current replacements for a defective/missing body part and are being coated in the course of refinishing the vehicle body they will become part of.

**102.3 NSPS & NESHAP:** In addition to this rule, facilities may be subject to New Source Performance Standards (NSPS) in Rule 360 and/or to National Emission Standards for Hazardous Air Pollutants (NESHAP) in Rule 370 of these Rules and Regulations.

**SECTION 200 – DEFINITIONS:** For the purpose of this rule, the following definitions shall apply~~:~~, in addition to those definitions found in Rule 100 (General Provisions and Definitions) of these rules. In the event of any inconsistency between any of the Maricopa County air pollution control rules, the definitions in this rule take precedence.

**201 AUTOMATIC GUN-CLEANING MACHINE (GUN CLEANER) -** A machine which, after being loaded, cleans paint spray-guns without the assistance of a person.

**202 AUTOMOBILE/LIGHT DUTY VEHICLE -** A vehicle manufactured by a facility that is designated by code 33611 of the 1997 North American Industrial Classification System (NAICS), as incorporated by reference in subsection 505.3. This comprises only vehicles manufactured by a large production-line facility that makes the following complete vehicles or chassis [for such vehicles]: automobile, light duty van, light duty motor home, pick-up truck, and/or utility vehicle.

**203 COATING AS APPLIED -** Refers to coating at the time immediately prior to its application, including any final addition of solvent to the coating before such coating is applied.

**204** **CONVENTIONAL AIR ATOMIZED SPRAY (SYSTEM) -** A spray which is atomized with air in a system designed to exceed 25 psig (1.7 bar) at the center of the spray-gun tip and which is not used with an electrostatic transfer system.

**205** **DAY -** A period of 24 consecutive hours beginning at midnight.

**206** **DEPARTMENT -** The Maricopa County ~~Environmental Services~~Air Quality Department.

**207** **DETAILING GUNS AND TOUCH-UP GUNS -** Small air spray devices, including air brushes, that operate at no greater than 6 cfm (170 liters per minute) air flow and no greater than 50 psig (3.4 bar) air pressure and are used to coat small areas.

**208** **DILUENT -** For the purposes of this rule, any fluid in or added to a coating such as thinner, retarder, reducer, solvent, or drying accelerator which solubilizes, adjusts concentration, viscosity, flow, or drying rates and which evaporates as the coating film solidifies and cures.

**209** **ELECTROSTATIC APPLICATION -** A method of applying coating by electrically charging coating droplets or particles with an electrical device, causing their deposition onto a substrate by electrostatic attraction.

**210** **EMISSION CONTROL SYSTEM (ECS) -** A system, approved in writing by the Control Officer, designed and operated in accordance with good engineering practice to reduce emissions of volatile organic compounds. Such system consists of an emissions collection subsystem and an emissions processing subsystem.

**211** **ENAMEL -** Any non-lacquer topcoat.

~~**212** **EXEMPT COMPOUND** - See **NON-PRECURSOR ORGANIC COMPOUND**~~

~~**213**~~**212** **FLEXIBLE PLASTIC -** A surface or part made of solid (non-rubber) polymer designed to withstand significant deformation without damaging it for its intended use.

~~**214**~~**213** **HARDENER -** A coating component specifically designed to promote a faster cure of an enamel finish.

~~**215**~~**214** **HEAVY TRUCK -** Any cab/tractor, truck, van, bus, or motorhome with a manufacturer's gross vehicle weight rating of 8600 lbs or more that is licensable for highway travel; this includes any trailer or semi-trailer that is equipped to be pulled by any such cab/tractor, truck, or van.

~~**216**~~**215** **HEAVY DUTY VEHICLE -** Any highway vehicle, except for an automobile/light-duty vehicle as defined in Section 202. This includes, but is not limited to, all vehicular products manufactured

under NAICS code 3362, such as trailers, buses, canopies, and the following: trucks, construction equipment, and recreational vehicles.

~~217~~216 **HIGH-VOLUME LOW PRESSURE (HVLP) APPLICATION -** A type of coating spray system in which the final air pressure does not exceed 10 psig (67 kilopascals) and which depends on relatively large volumes of air to atomize the coating.

~~218~~217 **LACQUER** - A coating which becomes or remains soft when subjected to heat (thermoplastic), which dries primarily by solvent evaporation, and which is resoluble in its original solvent.

~~219~~218 **LOW PRESSURE GUN -** An air atomized spray gun which by design functions best at tip pressures below 10 psig (0.7 bar), measured according to subsection 502.4, and for which the manufacturer makes no written claims that the gun can be used effectively above 12 psig (0.8 bar).

~~220~~219 **MIXING INSTRUCTIONS -** The coating or coating component manufacturer's or importer's specification of the quantities of coating components for mixing a coating.

~~221~~220 **MOBILE EQUIPMENT** - Any equipment that is physically capable of being driven or drawn upon a highway including, but not limited to, the following types of equipment: construction vehicles (such as mobile cranes, bulldozers, concrete mixers); farming equipment (such as wheel tractor, plow, pesticide sprayer); hauling equipment (such as truck trailers, utility bodies, camper shells); and miscellaneous equipment (such as street cleaners, golf carts, all-terrain vehicles {ATVs}, mopeds) etc.

~~222~~221 **MULTI-COLORED TOPCOAT** - A topcoat that exhibits more than one color, is packaged in a single container, and camouflages surface defects on areas of heavy use, such as cargo beds and other surfaces of trucks and other utility vehicles.

~~223~~ ~~**NON-PRECURSOR ORGANIC COMPOUND (EXEMPT COMPOUND)** - Any of the organic compounds which have been designated by the EPA as having negligible photochemical reactivity. EPA designates such compounds as "exempt". A listing of these compounds is found in Rule 100.~~

~~224~~222 **PRETREATMENT WASH PRIMER** - A primer that contains a minimum of 0.5 percent acid by weight that is applied directly to bare metal surfaces to provide corrosion resistance and to promote adhesion of subsequent coatings.

~~225~~223 **PRIMER** - Any coating applied prior to the application of a topcoat for the purpose of corrosion resistance and/or adhesion.

~~226~~224 **PRIMER-SEALER** - Any coating applied prior to the application of a topcoat for the purpose of corrosion resistance, adhesion of the topcoat, and/or color uniformity and to promote the ability of an undercoat to resist penetration by the topcoat.

~~227~~225 **PRIMER-SURFACER** - Any coating applied prior to the application of a topcoat for the purpose of filling surface imperfections in the substrate, corrosion resistance, and/or adhesion of the topcoat.

~~228~~226 **REDUCER** - Any solvent used to thin enamels.

~~229~~227 **REFINISH, REFINISHING -** Recoating previously paint-finished parts of a motorcycle or of the body of an automobile/light duty vehicle. The body does not include mechanical parts or chassis, except as they are incorporated into the surface of the body, such as a motor-driven mirror assembly and coated underbody.

~~230~~228 **SINGLE-STAGE TOPCOAT** - A topcoat consisting of only a single coating formulation applied in one or more coats.

~~231~~229 **SPECIALTY COATING** - Any coating that is specifically designated by the coating manufacturer as being one or more of the following:

~~231.1~~229.1 **Adhesion Promoter -** A coating designed to facilitate the bonding of a primer or topcoat on surfaces such as trim moldings, door locks, and door sills, where sanding is impracticable, and on plastic parts and the edges of sanded areas.

~~231.2~~229.2 **Bright Metal Trim Repair Coating -** A coating applied directly to chrome plated or other bright metal surface(s) to attain a desired appearance.

~~231.3~~229.3 **Cut-In, Or Jambing, Clearcoat -** A fast-drying, ready-to-spray clearcoat applied to surfaces such as door jambs and trunk and hood edges to allow for quick closure.

~~231.4~~229.4 **Elastomeric Coating** - A coating designed for application over flexible parts, such as elastomeric bumpers.

~~231.5~~229.5 **Impact-Resistant Coating** - A specialty coating used on the lower 12 inches (31.6 cm) of a quarter-panel, door, or fender to resist chipping caused by road debris.

~~231.6~~229.6 **Low-Gloss Coating** - A coating which exhibits a gloss reading less than or equal to 25 on a 60° glossmeter.

~~231.7~~229.7 **Radar Dispersing Coating -** A coating designed to disperse radar signals, applied to any part of a military vehicle or military mobile equipment.

~~231.8~~229.8 **Underbody Coating** - A coating designed for protection and sound deadening that is typically applied to the wheel wells and underbody of an automobile.

~~231.9~~229.9 **Uniform Finish Blenders -** Any coating that is applied in a spot repair for the purpose of blending a paint overspray ("feathered") area of a repaired topcoat to match the appearance of an adjacent existing topcoat.

~~231.10~~229.10 **Water Hold-Out Coating -** A coating applied to the interior cavity areas of doors, quarter panels and rocker panels for the purpose of corrosion resistance to prolonged water exposure.

~~231.11~~229.11 **Weld-Through Primer -** A primer that is applied to an area before welding is performed, and that provides corrosion resistance to the surface after welding has been performed.

~~232~~230 **SPOT REPAIR ON A HEAVY TRUCK -** A repair of a damaged or uncoated area of a heavy truck in which not more than a total of 1 liter (1.1 quart) of topcoat(s) and a total of 1 liter primers are used; and such coatings are applied from a reservoir that can hold no more than 1.2 liters when completely full.

~~233~~231 **SURFACE PREPARATION AND SURFACE CLEANING FLUIDS -** Fluids that are used to prepare a surface for further operations by aiding the removal of grime, greases, waxes, unwanted deposits and embedded particles from the surface.

~~234~~232 **STRIPPERS -** Powerful solvents used to dissolve permanent, cured coatings, usually to attain a bare substrate.

~~235~~233 **THINNER** - Any solvent used to reduce the viscosity or solids content of a coating.

~~236~~234 **THREE-STAGE TOPCOAT** - A topcoat composed of a pigmented basecoat, a midcoat, and a transparent clearcoat.

~~237~~235 **TOPCOAT** - Any coating or series of coatings applied over a primer or an existing finish for the purpose of protection or beautification.

~~238~~236 **TOUCH UP COATING -** A coating applied by brush, air-brush, or nonrefillable aerosol can to cover minor surface damage.

~~239~~237 **TWO-STAGE TOPCOAT** - A topcoat consisting of a pigmented basecoat and a transparent clearcoat.

~~240~~238 **VEHICLE REFINISH COATING COMPONENT** - Any portion of a coating, such as a reducer or thinner, hardener, additive, etc., recommended (by its manufacturer or importer) to distributors or end-users for vehicle refinishing. The raw materials (such as polyurethane resin, etc.) used to produce the components that are mixed by the end user to prepare a coating for application are not considered vehicle refinish coating components.

~~241~~239 **VEHICLE REFINISHING OPERATION -** For the purposes of this rule, any coating of vehicles or mobile equipment, their parts and components, including partial body collision repairs, for the purpose of protection, restoration or beautification, and which is subsequent to the original coating applied at a coating assembly line at an Original Equipment Manufacturing (OEM) plant.

~~242~~240 **VOC CONTENT** - See subsections 503.2 and 503.3.

~~243~~ ~~**VOLATILE ORGANIC COMPOUND (VOC)** - Any organic compound which participates in atmospheric photochemical reactions, except non-precursor organic compounds.~~

**SECTION 300 – STANDARDS**

**301 LIMITATIONS: VOC CONTENT OF REFINISH COATINGS FOR LIGHT DUTY VEHICLES**

**301.1** No person shall sell for use, supply for use, or apply, coating on a previously finished automobile/light-duty vehicle in Maricopa County unless the coating's VOC content complies with the applicable limits in Table 1.

**a.** VOC content is determined according to Sections 502, 503.2, and 505.

**b.** Compliance will be determined based on the VOC content limit, as expressed in metric units. (English units {lbs VOC/gal} are provided for information only.)

**TABLE 1**

**REFINISHES APPLIED TO THE BODIES OF AUTOMOBILE/LIGHT-DUTY VEHICLES OR MOTORCYCLES**

VOC LIMITS FOR REFINISH COATINGS AS APPLIED, MINUS EXEMPT COMPOUNDS

| Coating category | Grams VOC per liter | Pounds VOC per gal |
|---|---|---|
| Pretreatment wash primers | 780 | 6.5 |
| Primers/primer surfacers | 580 | 4.8 |
| Primer sealers | 550 | 4.6 |

| Coating category | Grams VOC per liter | Pounds VOC per gal |
|---|---|---|
| Single/two-stage topcoats | 600 | 5.0 |
| Topcoats of more than two stages | 630 | 5.2 |
| Multi-colored topcoats | 680 | 5.7 |
| Specialty coatings | 840 | 7.0 |
| Strippable booth coatings | 420 | 3.5 |

**301.2 Refinishing Surfaces That Are Not Part of Body/Chassis:** The recoating of a section of a light-duty vehicle that is not part of its body/chassis, its body's appurtenances, nor its wheels, shall comply with the VOC limits of Table 3. This includes drive-train, steering gear, suspension, etc.

**301.3 Refinishing Replacement Appurtenances On The Vehicle Body:** Vehicle-body appurtenances such as mirrors, trim strips, license-plate frames, etc., used to replace or supplement existing appurtenances on an automobile/light-duty vehicle bodies may be coated with coatings that meet the applicable VOC limits in Table 1, even if the item has never been coated or used.

**302 REFINISHING HEAVY DUTY TRUCKS AND TRUCK-TRAILERS:**

**302.1 Refinish VOC Limits:** No person shall apply refinish coating to any section or appurtenance of the body or chassis of a heavy truck unless that coating complies with the VOC limits in Table 2.

**a.** VOC content is determined according to Sections 502, 503.2, and 505.

**b.** Compliance will be determined based on the VOC content limit, as expressed in metric units. (English units {lbs VOC/gal} are provided for information only.)

**TABLE 2**

**VOC LIMITS FOR REFINISH COATING AS APPLIED TO HEAVY TRUCK BODIES**

| **VOC LIMIT and Effective Date** | Current | November 1, 1999 | November 1, 2000 | November 1, 2001 | | |
|---|---|---|---|---|---|---|
| **TYPE OF COATING** | | | | | | **ROW** |
| Pretreatment wash primer | 780 g/L<br>6.5 lb/gal | | | | | **1** |
| Primers/primer surfacers | 580 g/L<br>4.8 lb/gal | same | same | 420 g/L<br>3.5 lb/gal | | **2** |
| Primer sealers | 550 g/L<br>4.6 lb/gal | same | same | 420 g/L<br>3.5 lb/gal | | **3** |
| Single stage, solid color | 600 g/L<br>5.0 lb/gal | same | same | 420 g/L<br>3.5 lb/gal | | **4** |
| Single stage, metallic/iridescent | 550 g/L<br>4.6 lb/gal | same | same | 420 g/L<br>3.5 lb/gal | | **5** |

| | | | | | | |
|---|---|---|---|---|---|---|
| 2-Stage topcoat basecoat & clearcoat | 600 g/L<br>5.0 lb/gal per formula** | same | same | 480 g/L<br>4.0 lb/gal per formula** | | **6** |
| Topcoats of more than two stages | 630 g/L<br>5.2 lb/gal per formula** | same | same | 480 g/L<br>4.0 lb/gal for trailers** | | **7** |
| Spot coats, 1 liter limit each stage | 600 g/L<br>5.0 lb/gal | | | | 546g/L<br>**(11/2/02)** | **8** |
| Specialty Coatings as defined by §231 | 840 g/L<br>7.0 lb/gal | | | | | **9** |
| | | | | | | |
| Strippable booth coatings | 2.0 lb/gal | | | | | |
| ******Formula for computing the VOC content of multi-stage coating is in subsection 503.1 | | | | | | |

**302.2 Refinishing Replacement Appurtenances On A Heavy Truck:** At the time of (re)placement, a person may coat heavy truck body appurtenances such as mirrors, trim strips, license-plate frames, wheel covers, etc., with coatings that meet the applicable VOC limits in Table 2 or the requirements of subsection 302.3, if the item is about to be used to replace or supplement existing appurtenances, even if the item has never been coated or used.

**302.3 Spot Refinishing Of Heavy Trucks:** A person may coat a heavy truck panel, a juncture of panels, or a body appurtenance using a coating with a VOC content that does not exceed the VOC-limits set forth in subsection a below, provided that the coatings as applied meet the requirements as set forth in subsection b:

**a. VOC Limits For Spot Refinishing Of Heavy Trucks:**

**(1)** Through November 1, 2002, 600 g VOC/L (5.0 lb VOC/gal).

**(2)** After November 1, 2002, 546 g VOC/L (4.55 lb VOC/gal).

**b. Volume Limits:**

**(1)** The coating shall be applied from a reservoir having a gross volume not exceeding 1.2 liters (5 cups) and containing no more than 1 liter (1.1 qt.) of coating.

**(2)** The complete topcoat of a single stage finish shall not use more than 1 liter.

**(3)** The complete topcoat of a multi-stage finish shall not exceed 2 liters.

**(4)** The total of all non-topcoat coatings, including wash and primers shall not exceed 1 liter.

**c.** Wash Primers may have up to 780 g/L (6.5 lb/gal).

**303 COATING NEW SURFACES & REFINISHING HEAVY VEHICLES:**

**303.1 Coating New Or Never Coated Surfaces:** New or never coated surfaces of mobile equipment and of a vehicle, including a heavy truck, that is not manufactured under NAICS code 33611, are subject to a VOC limit of 3.5 lb VOC/gal (420 g/L) for all unbaked coatings over metal or plastic. The VOC content of coating applied on or over surfaces included in Table 3 shall comply with the VOC limits of Table 3.

**303.2 Refinishing Surfaces That Are Not Part Of Body/Chassis:** The recoating of a section of mobile equipment or a heavy-duty vehicle, including a heavy truck, that is not part of its body/chassis, its wheels, nor appurtenances, shall comply with the VOC limits of Table 3. This includes drive-train, steering gear, suspension, etc.

**303.3 Refinishing Mobile Equipment And Heavy-duty Vehicles:** No person shall refinish mobile equipment or any heavy-duty vehicle that is not a heavy truck unless the coating as applied conforms to the VOC limits in Table 3, except that pre-treatment acid etchant wash shall conform to the VOC limits of row 1 in Table 2.

**TABLE 3**

**VOC Limits For Coating As Applied To Uncoated Vehicle Surfaces COATING**

| COATING ON METAL SURFACES<br>The following includes Coating, Adhesive, & Adhesive Primer | Lbs. per gallon | Grams per liter |
|---|---|---|
| Air-Dried Coating | 3.5 | 420 |
| Baked Coating [above 200°F (93°C)] | 3.0 | 360 |
| COATING ON VINYL SURFACES | 3.8 | 450 |
| COATING ON FABRIC SURFACES | 2.9 | 350 |
| COATING PLASTIC SURFACES not defined as flexible | 3.5 | 420 |
| COATING FLEXIBLE PLASTIC SURFACES (not Vinyl) | | |
| - Primer | 4.1 | 490 |
| - Color Topcoat | 3.8 | 450 |
| - Basecoat/Clear Coat (Combined System) | 4.5 | 540 |

**304 MIXING REQUIREMENTS:**

**304.1 Suppliers Provide Mixing Instructions:** No person shall supply vehicle refinishes regulated by Table 1 or Table 2 of this rule unless instructions for proper mixing/diluting are provided.

**304.2 Vehicle-Appropriate VOC-Content And Instructions:** If a supplier of a refinish coating represents that such coating is appropriate to coat a particular type of vehicle listed in Table 1 or Table 2:

**a.** The coating as mixed and applied must meet the applicable VOC limit in Table 1 or Table 2; and,

**b.** The supplier must provide only those mixing/blending instructions that meet the VOC limit; except,

**c.** Instructions that included both compliant and non-compliant formulation directions are acceptable if they have a line, mark, or totally obscuring coating through/over each word of all non-compliant mixing instructions.

**304.3** **Mixing Requirements For The Coating User:** No person adding VOC containing thinner, reducer, or other diluent to any refinish coating regulated by either Table 1 or Table 2 shall add such diluents in proportions higher than those specified or recommended by the instructions provided by the supplier of the coating.

**305 SURFACE-PREPARATION AND SURFACE-CLEANING FLUIDS:**

**305.1** A person cleaning or preparing a surface of a vehicle or mobile equipment for coating using a wipe method or other non-dip method shall use a material with a VOC content as applied of no more than 1.4 pounds of VOC per gallon as determined by methods set forth in subsections 502.1d or 502.3.

**305.2** Neither surface-cleaning nor surface-preparation material that contains VOC shall be applied by means of motor-compressed air if applied in a mist or (finely atomized) spray.

**305.3** Rule 331 applies to the dip cleaning of vehicle or mobile equipment surfaces.

**306** **MAINTENANCE:** Any person subject to this rule shall operate and maintain in proper working order all production and cleaning equipment in which VOC-containing materials are used or stored.

**307 PAINT GUN REQUIREMENTS AND LIMITS:**

**307.1** No person shall apply any coating with a VOC content exceeding 3.0 lb VOC/gal (360 g/l) using a spray gun, unless such spraying employs one of the following devices or systems:

**a.** A low pressure spray gun or system (such as HVLP), or

**b.** An electrostatic system, or

**c.** A system that atomizes principally by hydraulic pressure, including “airless” and “air-assisted airless”.

**307.2** A person is allowed to use a spray gun other than one allowed by subsection 307.1 under the following conditions:

**a.** For applying materials that have a VOC content not exceeding 3.0 lb VOC/gal (360 g/l) as applied, less water and non-precursor compounds.

**b.** If such guns are designed and used solely for detailing and/or touch-up, and have a maximum reservoir capacity of 250 cc (8.8 fluid ounces).

**c.** If such guns are used to apply adhesives.

**308** **EMISSION CONTROL SYSTEM:** As an alternative to meeting an applicable coating-VOC limit and/or work practice pursuant to Sections 302, 304, 305, or 307, an operator is allowed to operate an Emission Control System (ECS) that reduces VOC emissions by at least 85%, pursuant to Section 504.

**309** **CLEANUP AND CLEANING SUPPLY AND APPLICATION EQUIPMENT:**

**309.1** All solvent used to manually clean spray guns shall be collected into a container which shall be immediately closed after all the solvent has been collected.

**309.2** All solvent used for line cleaning shall be pumped or drained into a container kept closed when not in use.

**309.3** Tanks used for stripping off coating or for cleaning objects shall be covered when not in use. Solvent-dragout shall be minimized by tilting or rotating the object to drain off any pools of solvent before removing the object from above the tank.

**310** **GUN CLEANING MACHINES:** Any person subject to this rule shall use a paint gun cleaning machine to clean paint guns if the vehicle refinishing operation is required to have an Air Pollution Control Permit by Rule 200 of these Rules.

**310.1** **Manual Pre-Cleaning And Water Cleanup:**

**a.** Manual cleaning outside of the cleaning machine is allowed if the cleaning machine is used immediately after manual cleaning, and if done without spraying cleaning solvent with the gun.

**b.** A cleaning machine is not required to clean a paint gun if the gun is cleaned with water or a cleaning mixture that is more than 1/2 water by weight or volume.

**310.2 General Requirements For Gun Cleaning Machines:** The gun-cleaning machine shall:

**a.** Be designed to clean paint-guns and be kept in proper repair and free from liquid leaks.

**b.** Have at least one pump which drives cleaning solvent through and over the gun, and a basin which permits containment of the cleaning solvent.

**c.** Have all covers and other surfaces that are exposed to gaseous or liquid VOC-solvent be impervious to both gaseous and liquid VOC-solvent.

**310.3 Specific Requirements For 2 Types Of Cleaning Machines:**

**a. Automatic Gun-Cleaning Machine:**

**(1)** Shall be self-covering or enclosing when not loading or unloading.

**(2)** The machine shall have a self-closing cover or other self-enclosing feature which in the cover's closed position allows no gaps exceeding 1/8 inch (3 mm) between the cover and the cabinet.

**(3)** The machine shall be designed and maintained to prevent operation of its mechanical cleaning feature(s) unless it is completely covered or enclosed to the gap limits specified in the preceding subsection 310.3a.(2).

**b. Non-Automatic Remote Reservoir Gun-Cleaning Machine:**

**(1)** The cleaning machine shall be designed such that cleaning solvent drains from the sink/work-space quickly and completely into a remote reservoir when the work-space is not in use.

**(2)** The reservoir shall have the ability to contain VOC vapors and shall not have a cumulative total opening, including the drain opening(s), allowing VOC-escape to the atmosphere exceeding two square inches in area.

**(3)** Machine designs are allowed in which the base of the sink/work-space functions as the reservoir's top surface, as long the fit/seal between sink base and reservoir

container allows the reservoir to meet the opening limits specified in the preceding subsection 310.3b(2).

**311 STORAGE AND DISPOSAL OF VOC AND VOC-CONTAINING MATERIAL:**

**311.1** Any person subject to this rule shall store all VOC-containing materials, including but not limited to waste coatings, waste solvents and their residues, and rags in closed containers.

**311.2** A container must have a legible label identifying the container's contents.

**311.3** A container shall be kept closed except when contents are added or removed.

**311.4** Disposal of waste or surplus VOC-containing materials shall be done in a manner that inhibits VOC evaporation, such as having these materials hauled off site in sealed containers.

**312 EXEMPTIONS:**

**312.1** **Exemptions From Other Rules:** Maricopa County Air Pollution Rules and Regulations Rules 330 and 336 do not apply to any vehicle or mobile equipment coating or refinishing operation to which this Rule 345 is applicable.

**312.2** **Formal Vehicle Refinishing Training:** A student in classes at an accredited school which teaches vehicle refinishing is exempt from the recordkeeping provisions of this rule.

**312.3** Coating with a non-refillable aerosol can is exempt from this Rule 345.

**312.4** **Out-Of Date Coatings:** Coating otherwise subject to Table 1 limits but manufactured before January 15, 1999, is exempt from Table 1 VOC limits until November 1, 1999.

**SECTION 400 - ADMINISTRATIVE REQUIREMENTS**

**401** **ECS SCHEDULE:** Any owner or operator intending to install an ECS in a facility to comply with requirements of this rule shall comply with the requirements of subsection 504.3.

**402 THE RESPONSIBILITIES OF LARGE USERS:**

**402.1** The owner or operator of a facility which emits 10,000 pounds or more of VOC in any calendar year must submit a report of such emissions on a form supplied by the Department after the end of that calendar year.

**402.2** An owner or operator of a facility which in a calendar year meets or exceeds any of the following quantities must notify the Control Officer of this fact in writing by February 28 (within two months) after the end of that calendar year:

**a.** Used a total of 1000 gallons (3785 l) of coating (with reducer and hardener); or

**b.** Received a total of 1300 gallons (4920 l) of cleaning solvent, lacquer thinner and wash-thinner; or

**c.** Disposed of more than 1000 gallons or 6000 pounds (2722 kg) to hazardous waste collection; or

**d.** Submitted a total exceeding 9000 pounds (4082 kg) of VOC in the facility's most recently completed Maricopa County annual air-emission inventory form.

**402.3** The Control Officer may require in writing a report of annual emissions from a facility which has given notification as required by the preceding subsection 402.2, or from any other facility which in the Control Officer's determination can have annually emitted 5 tons (4536 kg) or more of VOC.

**403 JOBBERS/SUPPLIERS RECORDKEEPING RESPONSIBILITY FOR REFINISHES:**

**403.1** An owner or operator selling or supplying vehicle refinishing coatings, coating components, or refinishing supplies directly to facilities that refinish automobiles, light-duty vehicles, or heavy trucks in Maricopa County shall maintain records of the VOC content of such materials; and

**a.** Records shall be sufficient to calculate the total VOC annually sold to facilities described in the preceding subsection 403.1.

**b.** Records shall include sales of cleanup and surface preparation materials that contain more than 2% VOC by weight or volume, or more than 0.17 lb VOC/gal (20 g/L).

**403.2** An owner or operator shall total cumulative vehicle-refinishing VOC sold during a current calendar year (pursuant to 403.1) in a quarterly manner, by the end of the month following each quarter.

**403.3** Jobbers or suppliers annually supplying less than 100 pounds of vehicle refinishes and supplying less than 100 pounds of cleaning/surface prep materials to vehicle refinishers are exempt from the requirement of subsections 403.1 and 403.2.

**404** **WEIGHT EXCLUSION:** Vehicles having a manufacturer's gross vehicle weight rating of 8600 lbs or more are excluded from NAICS code 33611, unless clearly identified as being included by the NAICS, as incorporated by reference in Section 505.

## SECTION 500 - MONITORING AND RECORDS

**501** **RECORDKEEPING AND REPORTING:** Any person subject to this rule shall keep the records required under this Section 501 in a consistent and complete manner and shall make them available to the Control Officer without delay during normal business hours.

**501.1** **Responsibility For Products In Use:** An owner or operator shall maintain written records in the facility which give the name or code number of each VOC containing product and its VOC content as received. VOC content shall be expressed in pounds of VOC per gallon (or grams/liter), less water and non-precursors, excepting waterborne cleaners which shall include the water.

**a.** **Examples Of What To Include:** All coating components as received from the supplier, before any in-house blending, such as coating base and tint base for topcoats, midcoats, primers, specialty coatings, sealers, and strippable booth coating; other coating components such as hardeners, catalysts, reducers, promoters, inhibitors and other coating additives; and stripper, wash-thinner, lacquer thinner, gun cleaning solvent, surface prep cleaners and other cleaners, including waterborne cleaners which contain some VOC.

**b.** **Sufficient Documentation:** Any one of the following may be used to meet the requirements of subsection 501.1, as long as all VOC-containing refinishing products are accounted for pursuant to subsection 501.1, (first paragraph):

**(1)** An up-to-date hardcopy (in writing) list prepared for that facility.

**(2)** Current material safety data sheets (MSDS) or product data sheets showing the VOC content.

**(3)** Purchase documentation that gives VOC content, such as invoices and/or receipts showing VOC content.

**(4)** Current, dated manufacturers publications such as charts or lists which show VOC content, with the products used in the facility highlighted or otherwise clearly marked.

**501.2** **Documentation Of Purchases:** Purchase records showing the volume of each VOC-containing refinishing-related product purchased shall be kept available for the current and the previous year. Actual invoices and receipts showing the volume of the material purchased will suffice in place of ledger-style records.

**501.3** **Record Retention:** Records shall be retained for five years.

**501.4** **Records:** The Control Officer may account as VOC emissions to the atmosphere any VOC that is not accounted for by adequate records of disposal or of reuse within a facility.

## 502 COMPLIANCE DETERMINATION:

**502.1** For routine purposes, the Control Officer may determine VOC content from a manufacturer's product data document such as a current manufacturer's safety data sheet (MSDS) that provides exact product contents.

**502.2** Measurement of VOC content of coating materials subject to this rule, including the requirements of Section 301, shall be conducted and reported in accordance with EPA Test Method 24 (as incorporated by reference in Section 505), with the following restrictions for multi-component, polymerizing coatings: Method 24 shall be a modified to eliminate the post-mixing dilution step (that employs toluene or other solvent). The mixture shall be spread instead by appropriate technique to form a thin layer, occupying the entire bottom of the foil pan. California's Bay Area Air Quality Management District Method 31 (amended 4/15/92) can be used as a guide for such spreading.

**502.3** **Low Or No-Solids Materials:**

**a.** The VOC content of solutions, dispersions, and emulsions that have no solids or less than 5% solids shall be determined by 1 of the following methods:

**(1)** South Coast Air Quality Management District Method 313-91, as incorporated by reference in Section 505.

**(2)** Method 31 of California's Bay Area Air Quality Management District, as incorporated by reference in Section 505.

**b.** Measurement of the VOC content of cleaning fluids, including those cleaners limited by Section 305 of this rule, shall be according to the formula in subsection 503.3 and applicable test methods in Section 505.

**502.4** With reference to subsection 307.1a, measurement of air pressure at the tip of an air atomized paint spray gun that atomizes shall be performed using a device supplied by the gun's manufacturer for that purpose. The measurement shall be made dynamically at the center of the air cap and at the air horns, with the spray configured to a fan diameter of eight to ten inches on a flat surface being coated. The axis of the fan pattern shall be perpendicular to this surface.

**502.5** **Pretreatment Wash Primers:** The acid weight percent of pretreatment wash primers must be determined using the American Society for Testing and Materials (ASTM) Test Method D 1613-96, as incorporated by reference in Section 505. If the pigment in a pretreatment wash primer prevents the use of this test method for determining the acid weight percent of the coating, then the test method shall be used for the nonpigmented component of the coating, and the acid weight percent shall be calculated based on the acid content of the nonpigmented component and the mixing ratio of the nonpigmented component to the remaining components recommended by the regulated entity.

**502.6** **ECS Testing:**

**a.** The VOC content of gaseous emissions entering and exiting an ECS shall be determined by either EPA Method 18 or EPA Method 25 and its submethod(s), as are incorporated by reference in Section 505.

**b.** Capture efficiency of an ECS shall be determined either by EPA Method 204 and its submethods, or by using mass balance calculation methods in concert with EPA Methods 2, 2a, 2c, and 2d, as are incorporated by reference in Section 505.

**503** **FORMULAS:**

**503.1** For the purpose of determining compliance with the VOC content limits in Table 1 of this rule, each regulated entity shall determine the VOC content of a coating using the procedures described in subsection 503.2 for a single coating stage or as follows for the VOC content of a multi-stage coating.

$$\text{VOC multi} = \frac{\text{VOCbc} + \sum_{i=0}^{M} \text{VOCmc}_i + 2(\text{VOCcc})}{M + 3}$$

where:

$\text{VOC}_{\text{multi}}$ = VOC content of multi-stage topcoat, in grams VOC/liter of coating;

$\text{VOC}_{bc}$ = VOC content of the basecoat, as determined in subsection 503.2;

$VOC_{mc_i}$ = VOC content of midcoat i, as determined in subsection 503.2.;

$VOC_{cc}$ = VOC content of the clearcoat, as determined in subsection 503.2; and

M = Number of midcoats.

In a situation where a "ground coat" is used prior to a basecoat, use of the equation shall be adjusted as follows: The ground coat will be considered the basecoat and the basecoat will be considered one of the midcoats.

**503.2 Pounds Of VOC Per Gallon Of Coating (Grams VOC/Liter):** The mass of VOC per combined volume of VOC-plus-coating-solids before coating application, which can be calculated by the following equation:

$$\text{Pounds of VOC per Gallon (Grams/liter) of Coating} = \frac{W_s - W_w - W_{es}}{V_m - V_w - V_{es}}$$

Where:

$W_s$ = weight of volatile material in pounds (or grams)

$W_w$ = weight of water in pounds (or grams)

$W_{es}$ = weight of non-precursors in pounds (or grams)

$V_m$ = volume of total material in gallons (or liters if using grams)

$V_w$ = volume of water in gallons (or liters if using grams)

$V_{es}$ = volume of non-precursor compounds in gallons (or liters)

**503.3 VOC Content Of Cleaners And Reducers (Material VOC-Content):**

$$\text{VOC Content Of Material} = \frac{W_s - W_w - W_{es}}{V_m}$$

Using consistently either English or metric measures in the calculations

Where:

$W_s$ = weight of all volatile material in pounds (or grams) including VOC, water, non-precursor organic compounds and dissolved vapors.

$W_w$ = weight of water in pounds (or grams)

$W_{es}$ = weight of all non-precursor compounds in pounds (or grams)

$V_m$ = volume of total material in gallons (or liters)

## 504 EMISSION CONTROL SYSTEM (ECS) AND RELATED SYSTEM OPERATING REQUIREMENTS:

**504.1 ECS Requirements:** To meet the requirements pursuant to Section 308, an ECS shall be operated as follows:

**a.** The emissions-processing subsystem of the ECS shall reduce the VOC entering it by at least 90 percent.

**b.** Throughout the period when the VOC content exceeds the applicable VOC limits, the ECS shall be operated to control VOC emissions.

**c.** Materials that exceed the applicable VOC-limits shall be clearly identified such that workers are informed an ECS must be used.

**504.2 Recordkeeping For An ECS:**

**a.** On each day that an ECS is used to comply pursuant to Section 308, an owner or operator shall record the amount and VOC content of the material for which the ECS was used.

**b. ECS Operation And Maintenance Records:**

**(1)** On each day an ECS is used, make a permanent record of the operating parameters of the key systems as required by the O&M Plan.

**(2)** For each day or period in which the O&M Plan requires that maintenance be performed, a permanent record shall be made of the maintenance actions taken within 24 hours of maintenance completion.

**504.3 ECS Schedule:** Any owner or operator of a facility, first intending to install and commence to use an ECS pursuant to Section 308, shall submit for the Control Officer's approval an emission control plan describing the ECS by the first day of the 4th month after the month in which such facility becomes subject to the ECS requirement. The plan shall show how the ECS is to be used to achieve full compliance. The plan shall specify dates for completing increments of progress, such as the contractual arrival date of new control equipment. The Control Officer may require a person submitting such emission control plan to submit subsequent reports on progress in achieving compliance. Any and all ECS used to achieve such compliance shall be in operation by 15 months after the facility becomes subject to the ECS requirement.

**504.4 Operation And Maintenance (O&M) Plan Required For ECS:** For any ECS used to meet the requirements of this rule:

**a.** An owner or operator shall provide and maintain (an) O&M Plan(s) for the ECS and any ECS monitoring device.

**b.** The owner or operator shall submit to the Control Officer for approval the O&M Plans of each ECS and each ECS monitoring device.

**c.** The owner or operator shall comply with all the identified actions and schedules provided in each O&M Plan.

**504.5 Providing And Maintaining ECS Monitoring Devices:** Any person incinerating, adsorbing, or otherwise processing VOC emissions pursuant to this rule shall provide, properly install and maintain in calibration, in good working order and in operation, devices described in the facility's O&M Plan that indicate temperatures, pressures, rates of flow, or other operating conditions necessary to determine if air pollution control equipment is functioning properly and is properly maintained.

**504.6 O&M Plan Responsibility:** An owner or operator of a facility that is required to have an O&M Plan pursuant to subsection 504.4 must fully comply with all O&M Plans that the owner or operator has submitted for approval, but which have not yet been approved, unless notified otherwise by the Control Officer in writing.

**505 TEST METHODS ADOPTED BY REFERENCE:** The EPA test methods as they exist in the Code of Federal Regulations (CFR) (July 1, 1998), as listed below, are adopted by reference. The other test methods listed here are also adopted by reference, each having paired with it a specific date that identifies the particular version/revision of the method that is adopted by reference. These adoptions by reference include no future editions or amendments. Copies of test methods referenced in this section are available at the Maricopa County ~~Environmental Services~~ Air Quality Department, 1001 ~~North~~ N. Central ~~Avenue~~ Ave., Phoenix, AZ, 85004~~-1942~~.

**505.1 EPA Test Methods:**

**a.** EPA Methods 2 ("Determination of Stack Gas Velocity and Volumetric Flow Rate"), 2a ("Direct Measurement of Gas Volume Through Pipes and Small Ducts"), 2c ("Determination of Stack Gas Velocity and Volumetric Flow rate in Small Stacks or Ducts"), and 2d ("Measurement of Gas volumetric Flow Rates in Small Pipes and Ducts"). All 4 of the foregoing methods are in 40 CFR 60, Appendix A.

**b.** EPA Method 18 ("Measurement of Gaseous Organic Compound Emissions by Gas Chromatography") and its submethods (40 CFR 60, Appendix A).

**c.** EPA Test Method 24 ("Determination of Volatile Matter Content, Water Content, Density, Volume Solids, and Weight Solids of Surface Coatings") (40 CFR 60, Appendix A).

**d.** EPA Method 25 ("Determination of Total Gaseous Nonmethane Organic Emissions as Carbon") and its submethods (40 CFR 60, Appendix A).

**e.** EPA Test Methods 204 ("Criteria For and Verification Of a Permanent or Temporary Total Enclosure"), 204a, 204b, 204c, 204d, 204e, and 204f (Appendix M, 40 CFR 51).

**505.2 Other Test Methods (Not EPA):**

**a.** California's Bay Area Air Quality Management District (BAAQMD) Method 31 (April 15, 1992), "Determination of Volatile Organic Compounds in Paint Strippers, Solvent Cleaners, and Low Solids Coatings".

**b.** California's South Coast Air Quality Management District (SCAQMD) Method 313-91 (April, 1997).

**c.** American Society for Testing and Materials (ASTM) Test Method D 1613-96 (1996).

**505.3 Other Reference Material:** North American Industrial Classification System, Executive Office of the President, Office of Management and Budget, 1997, pp. 334-339, et. seq.

## REGULATION III - CONTROL OF AIR CONTAMINANTS

## RULE 346
## COATING WOOD MILLWORK

### INDEX

**SECTION 100 – GENERAL**

101 PURPOSE

102 APPLICABILITY

**SECTION 200 – DEFINITIONS**

201 ADHESIVE

202 AEROSOL-SPRAY COATING

203 AIR-ATOMIZED SPRAY (GUN)

204 ARCHITECTURAL COATING

205 BASECOAT

206 COATING

207 CONVENTIONAL AIR-ATOMIZED SPRAY (SYSTEM)

208 CUSTOM REPLICA MILLWORK

209 DAY

210 DILUENT

211 ELECTROSTATIC APPLICATION

212 EMISSION CONTROL SYSTEM (ECS)

213 FACILITY

214 FAUX FINISH

215 FINISHING MATERIAL

216 GROUNDCOAT

217 LOW PRESSURE SPRAY GUN

218 NON-OPAQUE

219 NONPERMANENT FINAL FINISH

~~220 NON-PRECURSOR ORGANIC COMPOUND~~

~~221~~ 220 OPAQUE COATING

~~222~~ 221 REPAIR COATING

~~223~~ 222 RESTRICTED-USE GUN

~~224~~ 223 SEALER, PRIMER, OR GROUNDCOAT

~~225~~ 224 SINGLE RESIN-LAYER FINISH

~~226~~ 225 STAIN

~~227~~ 226 STRIPPABLE COATING

~~228~~ 227 STRIPPING OPERATION

~~229~~ 228 TOPCOAT

~~230~~ 229 TOUCH UP COATING

~~231~~ 230 TRANSFER EFFICIENCY

~~232~~ 231 VOC-BORNE COATING

~~233~~ 232 VOC-SOLVENT

~~234 VOLATILE ORGANIC COMPOUND (VOC)~~

~~235~~ 233 WASHCOAT

~~236~~ 234 WOOD MILLWORK

~~237~~ 235 WOOD-PRODUCT

~~238~~ 236 WORKING DAY

**SECTION 300 – STANDARDS**

301 VOC CONTENT

302 LIMITATION OF CONVENTIONAL AIR-ATOMIZED SPRAY AND OTHER SPRAY METHODS ATOMIZING WITH HIGH-PRESSURE AIR

303 OPERATION AND MAINTENANCE

304 CLEANUP AND CLEANING OF SUPPLY AND APPLICATION EQUIPMENT

305 HANDLING AND DISPOSAL OF VOC
306 STATEMENT OF VOC CONTENT
307 EXEMPTIONS

**SECTION 400 - ADMINISTRATIVE REQUIREMENTS**
401 COMPLIANCE SCHEDULE
402 REGULATORY CLARIFICATION
403 GUN TAGGING REQUIREMENTS

**SECTION 500 - MONITORING AND RECORDS**
501 RECORDKEEPING AND REPORTING
502 COMPLIANCE DETERMINATION - TEST METHODS

**APPENDIX A TO RULE 346**

**APPENDIX B TO RULE 346**

**Adopted 04/03/96**
**Revised 11/20/96**
**Revised 09/25/13**

**MARICOPA COUNTY**
**AIR POLLUTION CONTROL REGULATIONS**

**REGULATION III - CONTROL OF AIR CONTAMINANTS**

**RULE 346**
**COATING WOOD MILLWORK**

**SECTION 100 - GENERAL**

**101** **PURPOSE:** To limit emissions of volatile organic compounds from the surface preparation and coating of wood millwork.

**102** **APPLICABILITY:** The provisions of this rule apply to any facility in Maricopa County applying finishing material to millwork included under SIC code 2431 made of wood or wood-derived material. Simplified provisions of Appendix B in this rule may be used by facilities which agree to a permit limit of less than 10 tons of VOC emissions per year. Sources emitting less than 2 tons of VOC per year may be allowed exemptions pursuant to subsection 307.2c.

**SECTION 200 – DEFINITIONS:** For the purpose of this rule, the following definitions shall apply~~:~~, in addition to those definitions found in Rule 100 (General Provisions and Definitions) of these rules. In the event of any inconsistency between any of the Maricopa County air pollution control rules, the definitions in this rule take precedence.

**201** **ADHESIVE -** Any substance, usually having a fluid phase during application, used principally to bond two or more surfaces into close proximity with one another.

**202** **AEROSOL-SPRAY COATING -** A coating which is sold in a hand-held, pressurized, non-refillable container, usually of less than 22 fluid ounces (0.66 liter) capacity, and which is expelled from the container in a finely divided form when a valve on the container is depressed.

**203** **AIR-ATOMIZED SPRAY (GUN) -** Equipment used to apply coatings in which the chief means of atomizing the coating is via pressurized air which also mixes into the cloud of coating particles after expulsion from a spray nozzle.

**204** **ARCHITECTURAL COATING -** Any coating applied to stationary structures and their appurtenances, to mobile homes, to pavements or to curbs.

**205** **BASECOAT -** A coat of colored material, usually opaque, that is applied before graining inks, glazing coats, or other high-hiding finishing materials. A basecoated surface usually receives a topcoat also.

**206** **COATING -** Any liquid, fluid, or mastic composition which is converted to a solid (or semi-solid) protective, decorative, or adherent film or deposit after application to a substrate as a thin layer.

**207** **CONVENTIONAL AIR-ATOMIZED SPRAY (SYSTEM) -** A spray which is atomized with air in a system designed to exceed 25 psig (1.7 Bar), as measured according to subsection 502.2, and which is not used with an electrostatic transfer system.

**208** **CUSTOM REPLICA MILLWORK -** Millwork products individually produced or repaired after an order has been received from a client specifying a particular style and period, using both the style and the methods of construction, including materials, joinery, and finishes, which are authentic to the period.

**209** **DAY -** A period of 24 consecutive hours beginning at midnight.

**210** **DILUENT -** For the purpose of this rule, any fluid in or added to a coating such as thinner, retarder, reducer, solvent, or drying accelerator which solubilizes, adjusts concentration, viscosity, flow, or drying rates and which evaporates as the coating film solidifies and cures.

**211** **ELECTROSTATIC APPLICATION -** A method of applying coating by electrically charging coating droplets or particles causing their deposition onto a substrate by electrostatic attraction.

**212** **EMISSION CONTROL SYSTEM (ECS) -** A system for reducing emissions of organic compounds, consisting of both collection and control devices which are approved in writing by the Control Officer and are designed and operated in accordance with good engineering practice.

**213** **FACILITY -** For the purpose of this rule, all the pollutant-emitting activities belonging to SIC code 2431, which are located on one or more contiguous or adjacent properties, and under the control of the same person or persons under common control.

**214** **FAUX FINISH -** A finish intended to simulate a surface other than wood, including, but not limited to, stone, sand, metal, fur and leather.

**215** **FINISHING MATERIAL -** A coating other than one designed solely or principally as an adhesive, temporary maskant, and/or preservative. For millwork, finishing materials include, but are not limited to, topcoats, sealers, primers, stains, basecoats, groundcoats, washcoats, enamels, toners, glazes, and graining inks.

**216** **GROUNDCOAT -** A colored coating applied to wood-product substrate, which completely hides the color of the substrate in a single coat.

**217** **LOW PRESSURE SPRAY GUN -** An air-atomized spray gun which by design functions best at tip pressures below 10 psig (0.7 bar) measured according to subsection 502.2 of this rule, and for which the manufacturer makes no claims to the public that the gun can be used effectively above 12 psig (0.8 bar).

**218** **NON-OPAQUE -** A finish or coating which does not meet the definition of opaque as found in Section 221 of this rule. This includes coatings called “clear” by the wood products coating industry.

**219** **NONPERMANENT FINAL FINISH -** A material such as wax, polish, nonoxidizing oil or similar substance which retains its effect only temporarily and must be periodically reapplied to a surface to maintain or restore the material’s intended effect.

~~**220** **NON-PRECURSOR ORGANIC COMPOUND** - Any of the following organic compounds which have been designated by the EPA as having negligible photochemical reactivity: acetone; methane; ethane; methylene chloride (dichloromethane); 1,1,1-trichloroethane; trichlorofluoromethane (CFC-11); dichlorodifluoromethane (CFC-12); chlorodifluoromethane (HCFC-22); 1,1,2-trichloro-1,2,2-trifluoroethane (CFC-113); 1,2-dichlorotetrafluoroethane (CFC-~~

~~114); chloropentafluoroethane (CFC-115); trifluoromethane (HFC-23); 2,2-dichloro-1,1,1-trifluoroethane (HCFC-123); 2-chloro-1,1,1,2-tetrafluoroethane (HCFC-124); 1,1-dichloro-1-fluoroethane (HCFC-141b); 1-chloro-1,1-difluoroethane (HCFC-142b); pentafluoroethane (HFC-125); 1,1,2,2-tetrafluoroethane (HFC-134); 1,1,1,2-tetrafluoroethane (HFC-134a); 1,1,1-trifluoroethane (HFC-143a); 1,1-difluoroethane (HFC-152a); parachlorobenzotrifluoride (PCBTF); perchloroethylene (tetrachloroethylene); 3,3-dichloro-1,1,1,2,2-pentafluoropropane (HCFC-225ca); 1,3-dichloro-1,1,2,2,3-pentafluoropropane (HCFC-225cb); 1,1,1,2,3,4,4,5,5,5-decafluoropentane (HFC-43-10mee); cyclic, branched or linear completely methylated siloxanes; all completely fluorinated, completely saturated: alkanes, ethers and tertiary amines; sulfur-containing perfluorocarbons with no unsaturations, no hydrogen, and with sulfur bonds only to carbon and fluorine.~~

~~221~~220 **OPAQUE COATING -** Any functional film building coating which completely hides all grain, marking, shade, and color of the substrate under all lighting conditions including the brightest, direct sunlight.

~~222~~221 **REPAIR COATING -** A coating used to recoat portions of a previously coated product to cover mechanical damage to that previous coating following normal painting operations.

~~223~~222 **RESTRICTED-USE GUN -** Any spray gun which atomizes coating using compressed air, such that in normal use or a use advertised by the manufacturer or distributor, the tip pressure exceeds 12 psig (0.8 bar) in measurements done pursuant to subsection 502.2. Restricted-use gun also includes, but is not limited to, all conventional air-atomized spray guns.

~~224~~223 **SEALER, PRIMER, OR GROUNDCOAT -** A film-building finishing material used to seal the pores of wood or wood-derived material before additional coats of finishing material are applied. Finishing materials used primarily to alter the appearance or color of the substrate, such as stains, washcoats, glazes, inks, and toners, are not sealers.

~~225~~224 **SINGLE RESIN-LAYER FINISH -** A completed, consumer-ready finish, which has received only one application of resin-based coating serving as both sealer and topcoat, and having a total average dry finish thickness from the top of the finish to the surface of the wood-product substrate not exceeding 3 mils (0.076 mm) before sanding, as determined pursuant to the test method in subsection 502.3. If a washcoat is also used, the finish is not a single resin-layer finish.

~~226~~225 **STAIN -** A coating, formulated to enhance wood grain and change wood color without concealing surface grain. Stain includes sap stain, toner, non-grain-raising (NGR) stain, equalizer stain, no wipe stain, penetrating stain, wiping stain, and glaze. Stain excludes sealers and topcoats.

~~227~~226 **STRIPPABLE COATING -** A coating which is applied to spray booth surfaces to receive the overspray and protect the substrate, and which is designed to be readily pulled off in strips or sheets and disposed of.

~~228~~227 **STRIPPING OPERATION -** Any operation in which organic solvent is used to remove coating from a substrate.

~~229~~228 **TOPCOAT -** The last permanent, functional film-building finishing material applied to a manufactured wood-product. When the wood-product substrate is already sealed with sealer, any further coats that build a functional film are topcoats. Finishing materials used primarily to alter the appearance or color of the substrate, such as stains, washcoats, glazes, inks, and toners are not topcoats. A nonpermanent final finish is not a topcoat.

~~230~~229 **TOUCH UP COATING -** A coating used to cover minor coating imperfections after the main coating operation.

~~231~~230 **TRANSFER EFFICIENCY -** The ratio of the weight of coating solids deposited on an object to the total weight of coating solids used in a coating application step or series of such steps, expressed as a percentage.

~~232~~231 **VOC-BORNE COATING -** A coating in which the volatile portion contains, by weight, more VOC than water.

~~233~~232 **VOC-SOLVENT -** A solvent or diluent, used to solvate, dilute, reduce, thin, clean or strip, in which the weight-percent of VOC exceeds the weight percent of water.

~~234~~ ~~**VOLATILE ORGANIC COMPOUND (VOC)** - Any organic compound which participates in atmospheric photochemical reactions, except a non-precursor organic compound.~~

~~235~~233 **WASHCOAT -** A transparent special purpose coating having a solids content by mass of 12.0 percent or less, and which is used to seal wood-product surfaces for any of the following purposes: to prevent undesired staining, to control penetration of subsequent finishes, to provide a barrier when paper laminates are applied to the wood-product, to seal glazes, and to improve adhesion of a waterborne topcoat.

~~236~~234 **WOOD MILLWORK -** All millwork made of wood-product that is included in Standard Industrial Classification (SIC) industry number 2431. This includes, but is not limited to, shutters, doors, windows and their associated woodwork.

~~237~~235 **WOOD-PRODUCT -** Wood or wood-derived material, such as chipboard, particle board, fiberboard, pressed board, paper, and any other material derived from wood, bamboo, cane, or rattan, that retains some of the physical structure(s) of such original material(s), even if only at a microscopic level.

~~238~~236 **WORKING DAY -** A day, or any part of a day, in which a facility is engaged in manufacturing.

## SECTION 300 - STANDARDS

### 301 VOC CONTENT:

**301.1 Coating VOC Limits:** No person shall apply topcoats, sealers or opaque coatings to wood-product surfaces on millwork unless VOC content is limited to the following, less water and non-precursor organic compounds:

**a. General VOC Limits of Coatings**

| CATEGORY | grams/liter | lbs/gal |
|---|---|---|
| Non-opaque topcoat | 635 | 5.29 |
| Non-opaque sealer | 645 | 5.38 |
| Non-opaque acid-cured, alkyd amino topcoat | 655 | 5.45 |
| Non-opaque acid-cured, alkyd amino vinyl sealer | 680 | 5.66 |
| Opaque: Topcoat, Sealer, Primer, Groundcoat, Basecoat, or Stain | 610 | 5.10 |

**b. VOC Tradeoff Options:** (Acid-cured, alkyd amino coatings are exempt from gun tagging requirements.)

**(1) Lower VOC Topcoat And Unlimited Sealer:** A sealer has no VOC limit if all of its topcoat(s) have no more than 3.83 lb VOC/gal (460 g/l).

**(2) Lower VOC Sealer and Higher VOC Topcoat:** A sealer containing no more than 275 g VOC/liter (2.3 lb/gal) may be covered by a topcoat over 635 g/l containing up to 680 g VOC/liter (5.66 lb/gal), if the gun applying the topcoat is properly tagged. Requirements for gun tagging are in Section 403.

**(3) Single Application Finish:** A coating over 645 g/l which qualifies as a single resin-layer finish pursuant to Section 225 may contain up to 680 g VOC/liter (5.66 lb/gal) if the gun applying the coating is properly tagged. Requirements for gun tagging are in Section 403.

**c. Coatings with no VOC limits:** Non-opaque stains, washcoats, glazes, toners, inks and other non-opaque coatings not specified in subsection 301.1 have no VOC limits.

**301.2** **Strippable Booth Coatings:** No person shall use a strippable booth coating containing more than 360 g VOC/liter (3.0 lb VOC/gal), as applied.

**301.3** **Emission Control System (ECS) As An Alternative Control:** A facility may meet the VOC limits of either or both Subsections 301.1 and 301.2 if the owner or operator complies with all provisions in this rule's Appendix A and with the other applicable provisions of this rule.

**301.4** **Smaller Source Option:** The owner or operator of a facility that has emitted 2 or more tons but less than 10 tons per year of VOC from all wood coating and associated operations is exempted from all provisions of Sections 300, 400, and 501 (but not Sections 100, 200, and 502) if all provisions are complied with in this rule's Appendix B. Sources emitting less than 2 tons of VOC per year may be allowed exemptions pursuant to subsection 307.2c.

**302 LIMITATION OF CONVENTIONAL AIR-ATOMIZED SPRAY AND OTHER SPRAY METHODS ATOMIZING WITH HIGH-PRESSURE AIR:**

**302.1** **Evidence of Transfer-Efficient Spray Equipment:** A person shall not spray millwork with coating exceeding 4.29 lb VOC/gal (515 g VOC/liter) without providing evidence of possession and use of a low pressure spray gun or system, an electrostatic system, or a system that atomizes principally via hydraulic pressure, including air assisted airless and ultra-low-volume-air assisted technologies. Such requirement does not apply to any facility, activity, or person exempted by Section 307 of this rule nor to any specific system which is approved by the Administrator as having a transfer efficiency consistently exceeding 64%.

**302.2** **Limitation Of Air-Atomized Spray Other Than Low Pressure:** No person shall use a conventional air-atomized spray gun or other restricted use gun, except:

**a.** To apply finishing materials that have a VOC content not exceeding 4.29 lb/gal (515 g/liter).

**b.** If VOC emissions from the finishing application station, employing such a gun, are captured and directed to an ECS complying with the provisions of Appendix A.

**c.** For touch-up and repair only under either of the following conditions:

**(1)** such application is performed after completion of the entire finishing operation; or

**(2)** such application is performed after applying stain, and before any further coating, by equipment having a total capacity not exceeding 2.1 gallons (8 liters).

**d.** To apply less than 5% of all coating, pursuant to subsection 307.2d.

**303 OPERATION AND MAINTENANCE:** Any person subject to this rule shall operate and maintain in proper working order all process equipment in which VOC-containing materials are used or stored.

**304 CLEANUP AND CLEANING OF SUPPLY AND APPLICATION EQUIPMENT:**

**304.1 Booth cleaning:** No person shall clean spray booth components using a solvent containing more than 8.0 percent by weight of VOC (including water and non-precursor compounds) except for conveyors, continuous coaters and their enclosures, and metal filters. If the spray booth coating is being replaced, a person shall use no more than 1.0 gallon (3.8 liters) VOC-solvent to clean the booth.

**304.2** A person shall collect all solvent(s) used to clean spray guns and shall pump or drain all solvent used for line cleaning into non-leaking container(s). Such containers shall be immediately closed or covered after all the solvent has been collected, and shall remain so except when in use.

**305 HANDLING AND DISPOSAL OF VOC:**

**305.1 Use and Storage:** A person shall cover and keep covered each VOC-containing material which is not currently in use. A person shall store finishing and cleaning materials in closed or covered containers.

**305.2 Disposal Of VOC And VOC-Containing Material:** A person shall store all VOC-containing materials intended for disposal including, but not limited to, rags, waste coatings, waste solvents and their residues, in closed containers which are legibly labeled with their contents and which remain covered when not in use.

**306 STATEMENT OF VOC CONTENT:** Effective May 3, 1996, a manufacturer of wood coatings which are subject to this rule shall provide on each coating container or as an accompanying specification of each coating container a designation of VOC content in grams of VOC per liter (g/l) of coating or pounds of VOC per gallon (lb/gal) of coating, less water and non-precursor organic compounds. This requirement shall not apply to containers having a capacity of one liter (1.05 quart) or less.

**307 EXEMPTIONS:**

**307.1 Total Exemption:** The following materials are exempt from this rule: adhesives, architectural coatings, printing ink, and coatings not applied on or over a wood-product substrate.

**307.2 Partial exemptions**

**a. Touch-up cans:** Coatings in aerosol spray cans not exceeding 22 fl. oz. (0.66 liter) capacity used exclusively for touch-up and/or repairs are subject only to the recording requirements of subsections 501.a, b., and c.[1]

**b. VOC and Spray Exclusions:** The following shall be exempt from subsection 301.1 and Section 302 of this rule:

**(1) Refinishing, Replacement, And Custom Replica Millwork Operations:** Any refinishing operation necessary for preservation, to return millwork to original condition, to replace missing millwork items to produce a matching set, or to produce custom replica millwork.

**(2) Limited Amounts:** The use of the following coating types when the annual total use of all such types together is less than 948 liters (250 gal): prepackaged aerosol spray cans which are not used for touch-up or repair; metal leaf finishes; and faux finishes.

**c. Small Source Status:** A millwork coating facility which at any time demonstrates that it currently meets both of the following requirements is exempt from all provisions of this rule except for Section 303 “Operation and Maintenance” and Section 305 "Handling and Disposal of VOC". An operator of such an exempted facility shall keep on the premises current records of all coating related materials currently used, and their VOC content. For this purpose, a complete, updated set of receipts/invoices and Material Safety Data Sheets (MSDSs) will suffice if each receipt/invoice is retained on the premises at least two years.

[1] This errata note is not part of Rule 346. For the reader's convenience, the reference to "subsections 501.a., b., and c." is incomplete. The correct reference should be "subsections 501.1a., 501.1b.(2), 501.1c., 501.2b.(2), 501.2b.(5), and 501.3." The reference will be corrected for the next revision of this rule.

**(1)** Facility records demonstrate that no more than a total of 55 gallons (209 liters) of VOC-borne wood-product coatings plus VOC-solvent, including wood furniture coating operations, are used in any month and that such monthly total divided by that month's number of days of coating application does not exceed 3.0 gallons (11.4 liters); and

**(2)** The facility emits less than 1814 kg (4000 lb) VOC, facility-wide per year from all wood-product coating operations including VOC in both solvent-borne and water-borne coatings, all VOC diluent added to coatings, all solvent cleaning and stripping, and VOC-solvent used for coating equipment cleanup.

**d. Using Restricted Use Guns; Red Tag:** In addition to the uses of restricted-use guns allowed under subsections 302.2 a., b., and c., a person may use a conventional air-atomized or other restricted use gun to apply coatings exceeding 4.29 lb VOC/gal (515 g/l) if all the following conditions are met:

**(1)** The volume of such coating applied in this way is less than 5% of the total volume of coating applied at the facility;

**(2)** Each gun has a red tag when spraying materials exceeding 4.29 lb VOC/gal. Requirements for gun tagging are in Section 403;

**(3)** A log shall be kept pursuant to subsection 501.2c. of the amount of coating used by each such gun. This shall be done daily or each time coating is added to the gun's coating reservoir; and semi-annual calculation shall be made, pursuant to subsection 501.2.

## SECTION 400 - ADMINISTRATIVE REQUIREMENTS

**401 COMPLIANCE SCHEDULE:** The following schedule applies, with exceptions for operations using an Emission Control System provided in Appendix A.

**401.1 Sources Emitting 50 TPY:** Any facility which has applied for or received Title V status, has in its permit an annual VOC limit of 50 tons or more, or which has had an aggregate VOC emission to atmosphere after December 31, 1989, of 50.0 tons (45.35 Mg) or more in any calendar year or 300 pounds (136 kg) or more in any day, emitted from wood coating operations, including coating wood furniture, and from associated cleaning processes shall by May 3, 1996, be in compliance with all requirements of this rule and have submitted a Control Plan. The Control Plan shall set forth the maximum VOC

contents and provide a copy of the documentation showing how the coating-as-applied values were determined.

**401.2** **Other Sources:** The schedule follows for any wood millwork facility with total VOC emissions to atmosphere in each of the years 1990 through 1995 of less than 300 pounds (136 kg) in any day and 50.0 tons (45.35 MG) in any calendar year, emitted from wood coating operations, including coating wood furniture, and from associated cleaning processes:

**a.** A facility, for which an owner or operator chooses to meet the requirements of Section 301 by using compliant coatings, shall be in compliance with all applicable provisions of this rule, except for Section 301 and Section 302 by May 3, 1996. Such facility shall be in compliance with Section 301 and Section 302 of this rule by November 15, 1996.

**b.** **Control Plan:** A facility which has emitted more than 25 tons of VOC from coating operations in any of the years 1993 through 1995 must submit a Control Plan by August 1, 1996, setting forth the maximum VOC content and copies of the documentation showing how the coating-as-applied values were determined.

## 402 REGULATORY CLARIFICATION

**402.1** **Status With Respect To Rules 330 And 336:** No wood millwork coating operation is subject to Rule 330 or to Rule 336.

**402.2** **Component Materials That Were Subject To Prior Regulation:** The regulatory status of facilities, owners or operators is not affected by the fact that component materials, such as wood composites or paneling, may have been subject to Reasonably Available Control Technology (RACT) or other regulatory requirements in their original manufacture, before their subsequent use by a facility in Maricopa County.

**402.3** **Other Rules:** Nothing in this rule exempts a person from complying with the NESHAP (National Emission Standards for Hazardous Air Pollutants) for coating wood furniture and fixtures or from complying with any other applicable Federal, states, and local laws or regulations.

**402.4** **Coating Over Wood Coating(s) The Same As Coating Onto Wood:** The VOC-limits for finishing materials given in subsection 301.1 of this rule apply to such coatings whether applied directly onto any area of wood-product substrate or on any intermediate layer(s) of coating on the wood-product substrate.

**402.5 Opaque Coatings:**

**a. Anti-circumvention:** If a completed finish is opaque but, by themselves, neither the topcoat nor the basecoat nor the primer/sealer is opaque, at least one of such coatings shall not exceed 5.1 lb VOC/gal (610 g VOC/liter) as applied.

**b. Confirmation of opaqueness:** In a dispute between the Control Officer and an owner or operator as to whether a coating, which visually appears opaque to the Control Officer on a particular millwork surface, is opaque and therefore shall not exceed 5.1 lb VOC/gal (610 g VOC/liter) as applied, the finish shall be judged opaque if either the coating is described as opaque by the manufacturer or the material has a contrast ratio exceeding 84% at 1 dry mil (0.025 mm) of coating thickness.

**403 GUN TAGGING REQUIREMENTS**

**403.1** An owner or operator shall use a correctly colored 4 square-inch vivid, durable tag, sticker, or painted emblem/label visible on the gun or within 3 ft of the gun on the gun's hose to meet the tagging/labeling requirements of subsections 301.1b. and 307.2d.

**403.2 Tagging Summary:** Guns shall be tagged with the designated color for the following coating content or gun-type situations; (each VOC content is less water and non-precursor organic compounds):

**a. A Red Tag Or Label For VOC Tradeoff Option in Subsection 301.1b.** (Acid-cured, alkyd amino conversion varnishes are exempt from this subsection 403.2a.)

**(1)** On the gun applying topcoat above 5.29 lb VOC/gal (635 g/l) over sealer not exceeding 2.30 lb VOC/gal (275 g/l). [Reference subsection 301.1b.(2)].

**(2)** On the gun applying a single application finish exceeding 5.38 lb VOC/gal (645 g/l). [Reference subsection 301.1b.(3)].

**b. Using a Conventional or other Restricted Use Gun:** A red tag when applying coating over 4.29 lb VOC/gal (515 g/l) that is not for repair or touch-up. (Ref. subsection 307.2d.)

**SECTION 500 - MONITORING AND RECORDS**

**501 RECORDKEEPING AND REPORTING:** An owner or operator subject to this rule shall keep the following records and lists in a consistent and complete manner and shall make them available

to the Control Officer without delay during normal business hours. Each record shall be maintained for a minimum of five years.

**501.1 Current List:**

**a. VOC-containing materials:** A current list of all VOC-containing materials shall be maintained which contains the name or code and the VOC content of each. Any qualified single resin-layer finish shall be identified as such.

**b. How to express VOC content:**

**(1) Topcoats, Sealers, and Strippable Booth Coatings:** Two VOC-content values must appear for each topcoat, sealer, and booth coating: both grams VOC/liter (lb VOC/gal) *including* water and non-precursor organic compounds, *and* grams/liter *less* water and non-precursor organic compounds.

**(2) Other:** Use grams/liter (or lb/gal) for both coatings that are not sealers, topcoats, nor booth coatings and for non-coatings such as reducers, thinners, cleaners, etc.

**c. Acceptable Format:** VOC-containing materials shall be listed legibly and completely. The following is an example of an acceptable method:

**Example**: Identify and list each VOC-containing material in the following 6 categories: 1. topcoats; 2. sealers; 3. catalyst/hardeners; 4. diluents, such as reducers, coating solvents and thinners; 5. cleaning and stripping solvents; and 6. other VOC-containing materials. Next to each, record the VOC-content found on the container, an MSDS, an invoice, or other source.

**d. Mix ratios:** A current list shall be maintained of the manufacturer's recommended mix ratio of components, including but not limited to adding reducers and catalyst/hardeners, except when the manufacturer has no recommendations for any additions.

**501.2 Schedule For Recording Material Usage:**

**a. Daily Updates For Non-Compliant Material:** Daily usage quantities of each topcoat, sealer or booth material that exceeds applicable VOC limits of subsection 301.1 or subsection 301.2 or subsection 304.1 shall be totaled and logged by the end of the following workday. VOC content shall be entered for each such material.

**b. Monthly Update For Materials Compliant with Sections 301 and 304:** By the end of the following month, an owner or operator shall update the following records for each month:

**(1) Diluted Coatings:** For each topcoat and sealer to which reducer or other VOC-containing diluent is added at any time after its arrival at a facility, enter its highest VOC content in lbs/gal (or g/l) less water and non-precursor organic compounds.

**(2)** The amount of coating, the amount of catalyst/hardener, and the amount of reducer/coating diluent used.

**(3)** The quantity and type of organic solvent used each month for stripping and cleaning;

**(4)** The quantity of organic solvent disposed of offsite.

**(5) Exception:** Update yearly the totals of the usage of each VOC-containing material known to be used in amounts less than 15 gallons (57 liters) per year.

**c. Semi-Annual Updates of Coatings Applied with Restricted-Use Guns:** Records associated with the Section 302 limitations on the use of conventional air-atomized spray guns and other restricted-use guns shall be kept. These records shall show for each semi-annual period the volume (VR) of finishing materials exceeding 515 g VOC/liter (4.29 lb VOC/gal) applied with conventional air-atomized spray guns and other restricted use guns. In addition, the total volume of all finishing material (AMV) used throughout the facility shall be determined. The total volume (VR) so applied over the previous six-months is divided by the total of all coatings used in the same period (AMV) and these calculations and the result are entered in the log.

**501.3 Disposal/Recovery:** An owner or operator shall keep records of disposal/recovery of all VOC-containing materials.

**502 COMPLIANCE DETERMINATION - TEST METHODS:** When more than one test method is permitted for a determination, an exceedance of the limits established in this rule, as determined by any of the applicable test methods, constitutes a violation of this rule.

**502.1** Measurement of VOC content, pursuant to the VOC-limits of subsections 301.1, 301.2 and 304.1, shall be conducted and reported in accordance with EPA Test Method 24 (40 CFR 60, Appendix A). Acetone content shall be determined within the context of Method

24 by EPA Method 311 or other method acceptable to EPA. Multi-part coatings including those with reactive diluent(s) shall be tested by Method 24 procedures.

**502.2** Measurement of air pressure at the center of the spray gun tip and air horns of a conventional air-atomized spray gun (reference Section 302 and subsection 307.2d.) shall be performed using an attachable device in proper working order supplied by the gun's manufacturer for performing such a measurement.

**502.3** Determination of mil thickness for determining compliance with subsection 301.1b.(3) shall be performed by draw bar and calculations using the weight and area of the film and the density of the cured coating solids, by a Tooke Inspection Gage according to the instructions of its manufacturer, or by other means used for the purpose by a major coating manufacturer's laboratory or quality control.

**502.4** Contrast ratio determinations pursuant to subsection 402.5b shall be done using American Society for Testing and Materials (ASTM) Method D-2805-80.

## APPENDIX A TO RULE 346

**Appendix A is the first of two appendices to Rule 346.**

**Appendix A includes all requirements for an Emission Control Device**

**a.** **Eligibility:** A person is allowed to meet the VOC limits of either or both subsections 301.1 and 301.2, and meet the spray gun provisions of subsection 302.2 of this rule by using an ECS which reduces VOC emissions overall, including capture and processing, by at least 81 percent by weight.

**b.** **Compliance Schedule For ECS:** An owner or operator of a millwork coating facility shall have such facility in compliance per the following schedule. Total VOC emissions is the total VOC from all wood coating operations and associated cleaning processes. This includes furniture coating.

**(1)** **Sources Emitting 50 TPY:** Full compliance with all applicable requirements of this rule shall be by November 15, 1996, if such facility has applied for or received a Title V permit, has a permit with a VOC-emission limit of 50 tons or more, or which has had an aggregate VOC emission to atmosphere after December 31, 1989, of 50.0 tons (45.35 Mg) or more in any calendar year or 300 pounds (136 kg) or more in any day. In addition, an owner or operator shall provide the Control Officer with:

**(a)** Both proof of a binding contract for an ECS and a compliance plan by June 3, 1996, listing the dates of completion of increments of progress toward meeting the requirements of the subsection 301.3.

**(b)** An O&M Plan for the ECS by November 15, 1996.

**(2)** **Other Sources:** A facility shall be in compliance with the VOC limits of subsection 301.1 and 301.2 by January 15, 1997, if the facility's total VOC emission in each of the years 1990 through 1995 is less than 300 pounds (136 kg) in any day and 50.0 tons (45.35 MG) in any calendar year. In addition, the owner or operator shall provide the Control Officer with:

**(a)** Both proof of a binding contract for an ECS and a compliance plan by June 3,1996, listing the dates of completing the increments of progress toward meeting the requirements of subsection 301.3; and

**(b)** An O&M Plan for the ECS by January 2, 1997.

**c.** **Providing And Maintaining ECS Monitoring Devices:** Any person operating an emission control system (ECS) pursuant to subsection 301.3 of this rule shall install, maintain, and calibrate monitoring devices described in an O&M Plan submitted to the Control Officer pursuant to subsection d.(1). The monitoring devices shall measure temperatures, pressures, rates of flow, or other operating conditions necessary to determine if air pollution control equipment is functioning properly.

**d.** **Operation and Maintenance (O&M) Plan Required for ECS:**

**(1)** The owner or operator of an emission control system (ECS) used to meet the requirements of Section 301 of this rule shall provide the Control Officer with an Operation and Maintenance (O&M) Plan. This O&M Plan shall specify key system operating parameters, such as temperatures, pressures and/or flow rates, necessary to determine compliance with this rule, and describe in detail procedures and their frequency of implementation needed to maintain the ECS.

**(2)** The Control Officer's written approval of the O&M Plan is required. The owner or operator shall consistently implement all provisions of the O&M Plan.

**(3)** **Changes in frequency:** Changes involving reduction in the frequency or extent of procedures or parameters in a Control-Officer approved O&M Plan shall have the written consent of the Control Officer prior to being implemented.

**(4)** **Other changes:** An updated O&M Plan must be submitted to the Control Officer for review within 10 days of any changes not involving reduction in frequency or extent of procedures or parameters of an approved O&M Plan. Within five working days of a written disapproval of such changes, either the original O&M Plan shall be reinstituted or an alternative plan, negotiated with the affected facility and approved in writing by the Control Officer, shall be instituted.

**e. Recordkeeping**

**(1)** **ECS Operation and Maintenance Records:** On each day that an ECS is used to comply with Section 301 of this rule, an owner or operator shall make a permanent record of the operating parameters of the key systems described in the O&M Plan. For each day or period in which the O&M Plan requires that maintenance be performed, a permanent record shall be made of the maintenance actions taken, within 24 hours of maintenance completion. An explanation shall be entered for scheduled maintenance that is not performed during the period designated in the O&M Plan.

**(2)** **Other Records Required When Complying Via ECS:** An owner or operator choosing to meet the requirements of Section 301 through the use of an ECS shall maintain, in addition to the records required by subsection 501.2:

**(a)** Daily documentation showing the VOC content of the finishing material, as applied, in pounds VOC/gallon (g/l) when solvent or other VOC is added to the finishing material before application.

**(b)** Daily records showing the amount of coating, the amount of catalyst/hardener, and the amount of solvent, reducer, and/or diluent used.

**f. Compliance Determination - Test Methods:** When more than one test method is permitted for a determination, an exceedance of the limits established in this rule, as determined by any of the applicable test methods, constitutes a violation of this rule**.**

**(1)** Measurement of VOC content, pursuant to the VOC-limits of subsections 301.1, 301.2 and subsection 304.1, shall be conducted and reported in accordance with EPA Test Method 24 (40 CFR 60, Appendix A). Acetone content shall be determined within the context of Method 24 by EPA Method 311 or other method acceptable to EPA. Multi-part coatings including those with reactive diluent(s) shall be tested by Method 24 procedures.

**(2)** Control efficiency of an emission control device used to meet the requirements of Section 301 shall be determined according to EPA Reference Method 25 or an applicable submethod of Method 25 (Title 40, CFR Part 60, Appendix A).

**(3)** When an unknown quantity of non-precursor organic compound is present in the input to a control device, EPA Method 18 shall be used to meet the requirement of Section 301. The Control Officer may specify an alternative EPA test method or other method approved by EPA.

**(4)** Capture efficiency of an emission control device used to meet the requirements of Section 301 shall be determined by mass balance in combination with ventilation/draft rate determinations done in accordance with subsection f.(5), or according to "Guidelines for Determining Capture Efficiency" January 9, 1995, Candace Sorrell, Source Characterization Group A, Office of Air Quality Planning and Standards, US EPA. This EPA document is available at the Maricopa County Air Quality Department, 1001 N. Central Ave., ~~2406 South 24 Street, Suite E~~, Phoenix, Arizona, ~~85034~~85004, ~~or call (602) 506-6700~~ for information.

**(5)** Ventilation/draft rates of an emission control device used to meet the requirements of Section 301 shall be determined by EPA Methods 2, 2A, 2C, or 2D.

## APPENDIX B -- 2nd of two appendices to Rule 346

## A SHORT-FORM OPTION

**a.** **Applicability:** This Appendix B to Rule 346 only applies to operators of facilities which have a permit or permit modification limiting VOC emissions from all wood millwork and furniture coating to less than 10 tons, and the permit or Control Officer states in writing that this Appendix B applies. For those facilities for which this Appendix B does apply, no provisions within Sections 301 through 501, inclusive, shall be used to substitute for provisions in this Appendix B. Facilities subject to this Appendix B are also subject to all of Sections 100, 200, and 502.

**b.** **Definitions:** For the purposes of this Appendix B, the following definition shall apply:

**(1)** **MINUS EXEMPT MATERIALS (MINUS EXEMPTS) -** Means the same as “less water and non-precursor organic compounds” in specifying VOC content.

**c.** **Two Principal VOC Limits:** You must meet the limit of pounds of VOC per gallon of coating (grams VOC/liter) after all blending and reducing is completed. All VOC limits are minus exempt materials.

**(1)** **All Non-opaque sealers, primers, & topcoats:** 5.45 lb VOC/gal or 655 g/liter.

**(2)** **All Opaque sealers, primers, basecoats & topcoats:** 5.10 lb VOC/gal or 610 g/liter.

**d.** **VOC Tradeoff Options:**

**(1)** **Low VOC topcoat with unlimited Sealer:**

| | |
|---|---|
| Low VOC topcoat: | limit of 3.83 lb/gal topcoat (460 g/liter) & |
| Higher VOC sealer: | no VOC limit for sealer under such topcoat. |

**(2)** **Low VOC sealer with higher VOC Topcoat**

| | |
|---|---|
| Low VOC sealer: | limit of 2.30 lb/gal sealer (275 g/liter) |
| Higher VOC topcoat: | Topcoat over such sealer may have up to 5.66 lb/gal (680 g/l). |

**(3)** **One-step Finish:** The operation must meet 2 conditions.

Higher VOC combination sealer & topcoat: up to 5.66 lb/gal (680 g/liter)

The 2 Conditions:

I. A single wet application of either sealer or topcoat (not both).

II. Thickness of the dry finish cannot exceed 3 dry mils, as determined by the test method in subsection

**e. Spray Method Requirements:**

**(1)** **Guns with higher transfer:** If you spray coating having over 4.30 lb VOC/gal (515 g/l), you must use and have in evidence for an inspector at least one of the following onsite:

- Low pressure gun with less than 12 psig at tip. Examples: solely HVLP gun; a turbine gun.
- Airless; includes air-assisted airless.
- An electrostatic system.

**(2)** **Green Tag Option – Restriction on conventional guns and other restricted-use guns:**

**(a)** **Green Tag Requirements:** A conventional air-atomized or other restricted-use gun shall have a durable and visible tag, sticker, or painted emblem, no less than 4 square inches in area on the gun or within 3 ft of the gun on the gun's hose, or the facility is in violation. *But*, such a tag is not required at a facility having and using only coatings which contain less than 4.30 lbs VOC/gal (515 g/l), as applied.

**(b)** **Prohibition:** No coating over 4.30 lb VOC/gal (515 g/liter) may be applied with a *conventional* air-atomized or other *restricted-use gun*. This prohibition includes, but is not limited to, traditional lacquers, washcoats, and low-solids stains. ("Conventional air-atomized gun" is defined in Section 207. "Restricted-use gun" is defined in Section 223.)

**(3)** **Exemptions From VOC and Spray-Method Limits:** Prepackaged aerosol spray in cans under 22 fl. oz.; faux & metal-leaf finish are exempt from Appendix B subsections c., d., e.(1) and e.(2), as is any refinishing operation necessary for preservation, to return millwork to original condition, to replace missing millwork items to complete a matching set, or to produce custom replica millwork. But nothing exempted by the previous sentence is exempt from the annual inventory of VOC emissions or from other provisions of this Appendix B.

**f. Housekeeping Functions:**

**(1) Keep Coatings, Cleaners, & Waste-materials Covered:** Coatings and cleaners not in use, as well as waste coatings, cleaning materials including solvent-dipped rags, and solvent used to clean spray equipment must be collected into a closed container or a container which is closed immediately after receiving such material.

**(2) Booth Cleaning:** If booth/components other than *metal* filters are cleaned with solvent, no solvent which is more than 3.8 lb/VOC per gallon (455 g/l) shall be used. However, up to 1 gallon of solvent over 3.8 lb VOC/gal may be used for cleaning a booth as part of replacing coating on the booth.

**g. Records:** Keep a list of all VOC containing material with the name and amount of VOC in each. Express VOC content in pounds of VOC per gallon or grams of VOC per liter. For topcoats and sealers, use the VOC-content listed as "less 'exempt' materials" or "EPA" or "EPA Method".

**(1) If you ever do your own reducing or thinning of a sealer or topcoat:** Keep a list of the maximum VOC content of any material after you thin it or add additives at your facility.

**(2) Keep receipts for 5 years** of the amount received for each VOC-containing material and of the amount of all VOC-waste materials sent for recycling or hazardous waste collection.

**(3) What To Record And How Often:** Record the amount in the following 4 categories, (a) to (d), noting either the amount "used" or the amount "received" since your last records update:

**(a)** All coatings including topcoats, sealers, stains, etc., including all parts, catalysts, activators, additives, hardeners (*not* reducers). If you use conventional or other restricted-use guns at all, total *separately* the coatings having less than 4.3 lb VOC/gal (515 g/l);

**(b)** All reducers and diluents to be used for reducing or diluting coatings (not cleaning);

**(c)** All solvents, strippers, thinners, and VOC-containing materials used for cleaning and cleanup (not reducing); and

**(d)** All other VOC containing materials connected with wood coating. Omit janitorial & building maintenance.

**(e) How Often to Update Your Records:**

**(1)** Update the above items in (a), (b), (c), and (d) weekly if your total monthly *use* of all coatings and diluents [(a) + (b)] is 250 gallons or more. Otherwise, update monthly.

**(2)** You may record just once a year those types of materials you use less than 15 gallons of. Example: I use 5 kinds of graining ink. Added all together, I use 14 gallons of all graining ink combined: I only have to update my graining inks once a year.

## REGULATION III - CONTROL OF AIR CONTAMINANTS

## RULE 347
## FERROUS SAND CASTING

### INDEX


SECTION 100 – GENERAL

101 PURPOSE

102 APPLICABILITY

SECTION 200 – DEFINITIONS

201 BINDER

202 CERTIFIED PRODUCT DATA SHEET

203 DAY

204 EMISSION CONTROL DEVICE

205 EXEMPT COMPOUNDS

206 FACILITY-SPECIFIED WORKDAY

207 FERROUS METAL

208 INVESTMENT CASTING

209 MOLD-WASH

~~210 NON-PRECURSOR ORGANIC COMPOUND~~

~~211~~ 210 ORGANIC BINDER MATERIAL

~~212~~ 211 ORGANIC COMPOUND

~~213~~ 212 SAND

~~214~~ 213 SAND CASTING

~~215~~ 214 VOC CONTENT (POUNDS OF VOC PER GALLON OF MATERIAL)

~~216 VOLATILE ORGANIC COMPOUND (VOC)~~

SECTION 300 – STANDARDS

301 LIMITS

302 OPERATION AND MAINTENANCE

303 STORAGE AND DISPOSAL OF BINDERS, SOLVENTS, AND OTHER VOC CONTAINING MATERIAL

304 EXEMPTIONS

SECTION 400 - ADMINISTRATIVE REQUIREMENTS
401 COMPLIANCE SCHEDULE
402 OTHER REGULATORY MATTERS

SECTION 500 - MONITORING AND RECORDS
501 RECORDKEEPING AND REPORTING
502 INSTALLING AND MAINTAINING ECS MONITORING DEVICES
503 COMPLIANCE DETERMINATION - TEST METHODS

**Adopted 03/04/98**
**Revised 09/25/13**

**MARICOPA COUNTY**
**AIR POLLUTION CONTROL REGULATIONS**

**REGULATION III - CONTROL OF AIR CONTAMINANTS**

**RULE 347**
**FERROUS SAND CASTING**

**SECTION 100 – GENERAL**

**101** **PURPOSE:** This rule is to limit the amount of volatile organic compounds (VOCs) emitted by organic binder materials and other organic materials used in molds made of sand or other finely divided refractory material, in which ferrous metals are cast.

**102** **APPLICABILITY:** This rule applies to the sand-casting of ferrous metal and does not apply to investment casting.

**SECTION 200 – DEFINITIONS:** For the purpose of this rule, the following definitions shall apply~~:~~, in addition to those definitions found in Rule 100 (General Provisions and Definitions) of these rules. In the event of any inconsistency between any of the Maricopa County air pollution control rules, the definitions in this rule take precedence.

**201** **BINDER -** Any material which is used to bind molding sand or other refractory particles into a cohesive mold or part of a mold used for metal casting. The term, binder, includes any catalysts and any additives incorporated or mixed into the binding material, unless such catalyst or additive is excluded in writing by the Control Officer.

**202** **CERTIFIED PRODUCT DATA SHEET -** A document, signed by an officer of a binder or coating-supplying operation, that states the maximum organic content or VOC content of a particular product as supplied.

**203** **DAY -** A period of 24 consecutive hours beginning at midnight.

**204** **EMISSION CONTROL DEVICE -** A system, approved in writing by the Control Officer, which reduces emissions of organic compounds and consists of collection and control devices which are designed and operated in accordance with good engineering practice.

**205** **EXEMPT COMPOUNDS -** The non-VOC, evaporating portion of a formulation; this necessarily includes all non-precursor organic compounds and all volatile inorganic compounds such as water.

**206** **FACILITY-SPECIFIED WORKDAY -** The regular starting time (and ending time) chosen by a facility operator to designate the facility's own workday of 24 consecutive hours.

**207** **FERROUS METAL -** Iron, steel, or a metal alloy in which iron is the greatest constituent.

**208** **INVESTMENT CASTING -** A type of metal casting otherwise known as "lost-wax process" in which a mold, later used to receive molten metal, is built up around a fusible model. When the mold attains sufficient size, the model is melted out of the mold.

**209** **MOLD-WASH -** A liquid coating or surfacing agent, containing refractory particles and binding agent(s), which is applied to the heat-receiving surfaces of a mold to impart desired casting properties.

~~**210**~~ ~~**NON-PRECURSOR ORGANIC COMPOUND -** Any of the organic compounds which have been designated by the EPA as having negligible photochemical reactivity and that are set forth in the definition of non-precursor organic compound in Rule 100.~~

~~**211**~~**210** **ORGANIC BINDER MATERIAL -** The organic-compound portion of those binders that contain more than 5% organic compound(s) by weight.

~~**212**~~**211** **ORGANIC COMPOUND -** Any compound of carbon excluding carbon monoxide, carbon dioxide, carbonic acid, metallic carbides and carbonates, and ammonium carbonate.

~~**213**~~**212** **SAND -** Granular, non-flammable, mineral material which lacks an organic component and has refractory properties.

~~214~~213 **SAND CASTING -** A type of metal casting in which molten metal is poured into a mold made primarily of sand or other finely divided refractory material, bound together by binder material. For the purposes of this rule, sand casting does not include investment casting.

~~215~~214 **VOC CONTENT (POUNDS OF VOC PER GALLON OF MATERIAL) -** The weight of VOC per volume of material that can be calculated by:

$$\text{Pounds of VOC per Gallon of Material} = \frac{Ws - Wes}{Vm}$$

Where:

| | | |
|---|---|---|
| Ws | = | weight of all volatile (evaporating) material, in pounds |
| Wes | = | weight of water and all other exempt components, in pounds |
| Vm | = | volume of material, in gallons. |

~~216~~ ~~**VOLATILE ORGANIC COMPOUND (VOC)** - Any organic compound which participates in atmospheric photochemical reactions, except non-precursor organic compounds.~~

**SECTION 300 – STANDARDS**

**301** **LIMITS:** No person shall operate a ferrous sand-casting facility with an aggregate emission to atmosphere of 150 pounds (68 kg) or more of VOC in any day or 25 tons (22.7 Mg) or more of VOC in any year from ferrous sand-casting operations, unless VOC emissions from mold binders are controlled either pursuant to subsection 301.1 or pursuant to subsection 301.2.

**301.1** **Control Device: (**An) Emission Control System(s) which through capture and control reduces the total, facility-wide VOC emissions from binder by at least 81% as determined by the test methods referred to in Section 503 of this rule. VOC emissions from binders shall include but not be limited to VOC emitted from binders during mold-making, metal casting, and off-gassing from residual binder adhering to granules of mold sand.

**a.** Such System shall be operated whenever VOC emissions from binder can exceed 7 pounds (3.2 kg) per day, facility-wide.

**b.** The requirement for 81% control in subsection 301.1 does not apply to those clock hours during which the operator can demonstrate that such mold-binder VOC-emissions are less than 1 pound per hour, facility-wide.

**301.2** **Alternative Compliance Method:** For each facility-specified workday in which molds are made, the ratio of organic binder-material in all binder used to all sand receiving binder shall not exceed 1.35 to 100, by weight, as determined by the formula in subsection 503.6 of this rule.

**a.** The organic material in binders that contain no more than 5% organic compound(s) by weight is excluded from inclusion in the formula.

**b.** Failure to obtain the sand ordinarily used for molding shall not be an excuse to exceed the binder-to-sand ratio limit pursuant to subsection 301.2, except as is provided in Rule 100, Section 501 of these rules.

**301.3** **Surfacing Materials:** A person shall comply with the following limits when using mold-wash or other mold surfacer:

**a.** **VOC content:**

**(1)** Prior to 12:01 AM, January 1, 1999, neither mold wash nor other mold surfacing product shall contain more than 2.5 lb VOC/gal (300 g/l).

**(2)** After 12:01 AM, January 1, 1999, neither mold wash nor other mold surfacing product shall contain more than 1.0 lb VOC/gal (120 g/l).

**b.** **Averaging option:** In lieu of observing the mold-wash VOC limit in subsection 301.3a, a person may choose to average mold-wash VOC content over each completed facility-specified workday, pursuant to all provisions in (1) and (2) as follows:

**(1)** For each facility-specified workday, the average is recorded within 13 hours after the start of the following facility-specified workday, using the formula in subsection 503.7 of this rule; and

**(2)** Such average does not exceed a VOC content of 0.90 pounds VOC per gallon.

**301.4** **Gassing Operations:** If a binder system that includes the injection of a reactive gas, can without controls emit more than 1 pound per hour of VOCs, its emissions shall be controlled by an emission control device that attains one of the following levels of control.

**a.** 85% overall control (capture and processing) of such VOC.

**b.** 90% capture and a maximum of 3.5 pounds per hour VOC emission from the control device at any and all production levels.

**302** **OPERATION AND MAINTENANCE:**

**302.1 General Maintenance:** Any person subject to this rule shall operate and maintain in proper working order all process equipment in which VOC containing materials are used or stored.

**302.2 A Systematic Program To Establish Compliance With Subsection**

**301.2:** The owner/operator, complying with this rule pursuant to subsection 301.2 of this rule, shall have a systematic program as follows:

**a.** The program shall consist of devices and/or other effective means, which each day accurately indicates the amount of sand and the amount of binder, catalyst and any other additive that contains organic compound(s) and is incorporated into the molding sand.

**b.** Such program shall be in effect continuously during the mixing of binder with molding sand, and shall be of sufficient accuracy and consistency as to determine compliance with subsection 301.2 of this rule.

**c.** Any devices that are part of the program and are resettable shall be so protected as to preclude resetting by personnel not designated by the operator.

**d.** The systematic program shall include a complete, written description of its correct functioning, and shall be subject to the Control Officer's approval.

**302.3 Operation and Maintenance (O&M) Plan Required for ECS:**

**a.** The owner or operator of an emission control system (ECS) operated pursuant to subsection 301.1 or subsection 301.4 of this rule shall have an Operation and Maintenance (O&M) Plan for each ECS. This O&M Plan shall specify key system operating parameters, such as temperatures, pressures and/or flow rates, necessary to determine compliance with this rule, and describe in detail procedures and their frequency of implementation needed to maintain the ECS. The owner or operator shall provide a copy of the O&M Plan, if so requested by the Control Officer.

**b.** The owner or operator shall implement all provisions of the O&M Plan with the frequency specified by the Plan.

**c.** **Changes in frequency:** Changes involving reduction in the frequency or extent of procedures or parameters in a Control-Officer approved O&M Plan shall have the written consent of the Control Officer prior to being implemented.

**d. Other changes:** An updated O&M Plan must be submitted to the Control Officer for review within 10 days of any changes not involving reduction in frequency or extent of procedures or parameters of an approved O&M Plan. Within five working days of a written disapproval of such changes, either the original O&M Plan shall be reinstituted or an alternative plan, negotiated with the affected facility and approved in writing by the Control Officer, shall be instituted.

**303 STORAGE AND DISPOSAL OF BINDERS, SOLVENTS, AND OTHER VOC CONTAINING MATERIAL:**

**303.1 Storage:** A person shall cover and keep covered or enclosed each uncured binder material, any solvents, and any other VOC-containing material which are not in use. A person shall store binder materials and cleaning materials in closed or covered containers.

**303.2 Disposal Of VOC And VOC-Containing Material:** A person shall store all waste materials containing any VOC in fluid form, including but not limited to uncured binder components, rags, waste coatings, waste solvents and their residues, in closed containers. Such containers shall have labels that legibly identify their contents and shall remain covered except when contents are being added or removed.

**304 EXEMPTIONS:** Each calendar year an owner or operator is allowed to claim a total of 55 gallons of mold-wash that is exempt from all requirements pursuant to subsection 301.3 of this rule if all such mold-wash is separately identified, logged, and each month is cumulatively totaled for the year.

## SECTION 400 - ADMINISTRATIVE REQUIREMENTS

**401 COMPLIANCE SCHEDULE:** This rule is effective September 1, 1998.

**402 OTHER REGULATORY MATTERS:**

**402.1** Nothing in this rule shall relieve a person from complying with other applicable environmental statutes and rules.

**402.2** Rule 331 of these rules applies to cleaning, degreasing, and stripping processes which can emit VOC. Rule 336 applies to the coating of castings.

## SECTION 500 - MONITORING AND RECORDS

**501 RECORDKEEPING AND REPORTING:** An owner or operator subject to this rule shall keep the following records and lists in a consistent and complete manner, and shall make them available

to the Control Officer upon request. Records of the previous 12 months, requested during normal business hours, shall be made available without delay. Each of the following records shall be maintained for a minimum of five years:

**501.1 Current List:**

**a.** Maintain a current list of all VOC-containing fluid materials as received by the facility such as binders and/or binder components, coatings, cleaning solvents, lubricants and any other VOC-containing substances.

**b.** List the name or designation of each and include next to it the VOC content of each in pounds per gallon or grams per liter.

**c.** This requirement does not apply to materials having less than 2 percent organic content by volume as received.

**501.2 Monthly Schedule**: By the end of the following month, an owner or operator shall update the following records for each completed month:

**a.** The amount of each binder constituent used.

**b.** The amount of each mold-wash and surfacer used.

**c.** The quantity and type of VOC-containing solvent added each month as a diluent in binders, mold-wash, surfacer, or as a diluent in some other production capacity.

**d.** The quantity of fluid VOC or material containing any fluid VOC disposed of offsite. This includes VOC on rags, sand, and other materials.

**e.** Annual Exception: Yearly, update the totals of the usage of each fluid, VOC-containing material that is known to be used in amounts totaling less than 15 gallons (57 liters) per year for all that type of material.

**501.3 Frequency Of Computing The Binder-To-Sand Ratio:** The following provisions apply to a facility complying with VOC limits pursuant to subsection 301.2 of this rule:

**a. Monthly:** Computations of mass balance for the month shall be made according to the period-weighted average formula in subsection 503.6 of this rule within 7 workdays after the end of the month.

**b. Daily From Meter Readings:** Such calculations for each day, determined with the numerical output(s) of the system run pursuant to subsection 302.2 of this rule shall be completed and entered in a log by 12:01 PM of the following workday or by the middle of the first shift of the following facility-specific workday.

**c. Reduced Frequency of Determination for Ratios Below Limits:**

**(1) Earning weekly determinations:** If no daily ratios exceed 1.27 : 100 for forty consecutive workdays and no weekly ratio is above 1.25 : 100 during the same period, then weekly averaging may be instituted in place of daily calculations of the daily average, until such time as that weekly ratio is exceeded. Following such an exceedance, daily determinations shall be resumed.

**(2)** If there is no weekly average ratio above 1.20 : 100 for 10 consecutive weeks, then the following schedule may be followed:

**(A)** Determine each month's average by the middle of the first full, facility-specified workday of the following month; and

**(B)** In each month, determine the weekly average-ratio of a single, selected week in that month by the middle of the first full workday of the following week. The selected week shall be either the week specified in **(i)** or shall be the week specified by the Control Officer pursuant to **(ii)**:

**(i)** Determine the weekly average ratio for the week that falls immediately after the 3rd full work-week of the month.

**(ii)** The Control Officer may from time to time designate to the operator a random work-week of the month for determination of that week's average organic-compound to sand ratio. The Control Officer shall notify the operator prior to the commencement of production activities for the designated work-week.

**(C)** Determine the weekly average ratio by the middle of the first full workday of the following week. If any monthly average ratio exceeds 1.19 :100 or if any weekly average exceeds 1.20 : 100, then weekly averaging shall be resumed, unless the daily ratio maximum in 501.3c(1) of this rule is also exceeded, in which case daily determinations shall be resumed pursuant to subsection 501.3b.

**(3)** The schedule of determinations pursuant to subsections 501.3c(1) and (2) is disallowed if any exceedance or violation occurs of said schedule or of subsection 301.2 requirements. In either case, the operator shall then resume each schedule in subsections 501.3a and 501.3b.

**(4)** **Reinstatement:** Should an operator desire to reinstate a schedule provided in subsection 501.3c, the operator shall make such a request, in writing, to the Control Officer. The request shall state changes or improvements that make meeting the schedule's requirements reasonably certain. The Control Officer shall approve or deny such a request in writing.

**502** **INSTALLING AND MAINTAINING ECS MONITORING DEVICES:** Any person operating an Emission Control System (ECS) pursuant to subsection 301.1 of this rule shall install, maintain, and calibrate monitoring devices described in an O&M Plan submitted to the Control Officer pursuant to subsection 302.3. The monitoring devices shall measure temperatures, pressures, rates of flow, or other operating conditions necessary to determine if air pollution control equipment is functioning properly.

**502.1** **ECS Operation and Maintenance Records:** On each day that an ECS is used to comply with Section 301 of this rule, an owner or operator shall make a record, retained for 5 years, of the operating parameters of the key systems described in the O&M Plan. For each day or period in which the O&M Plan requires that maintenance be performed, a permanent record shall be made of the maintenance actions taken, within 24 hours of maintenance completion. An explanation shall be entered for scheduled maintenance that is not performed during the period designated in the O&M Plan.

**502.2** **Other Records Required When Complying Via ECS:** An owner or operator choosing to meet the requirements of Section 301 through the use of an ECS shall maintain, in addition to the monthly records required by subsection 501.2 of this rule, daily records showing the amount of binder, wash, and diluent used.

**503** **COMPLIANCE DETERMINATION - TEST METHODS:** When more than one test method is permitted for a determination, an exceedance of the limits established in this rule determined by any of the applicable test methods constitutes a violation of this rule.

**503.1** **Calibration of Metering Equipment on the Sand/Resin Mixer:**

**a.** Each month or as often as calibration is prescribed by the operating instructions supplied by the manufacturer , whichever is more frequent, the amount of sand delivered per minute at each different sand-supply rate for each different sand-supply

equipment configuration in current use shall be determined prior to any adjustment, and recorded. The same shall be done for the binder at each resin ratio setting and for the catalyst flowmeter if one is used pursuant to required calculations.

**b.** If adjustment is made to any device of which such adjustment can affect the flow rate, a flow rate test shall be performed subsequent to completion of adjustment, and the result recorded.

**503.2 VOC and Organic Content – Laboratory Methods:**

**a. Washes:** The VOC content of mold-washes and surfacers, as applied, shall be determined by a certified product data sheet or EPA Test Method 24 of 40 CFR Part 60, Appendix A. If there is a discrepancy between the information on the certified product data sheet and the results of the Method 24 analysis, compliance status shall be based on the Method 24 results.

**b. Binders:** The organic-compound content of binders, as used, shall be determined by a certified product data sheet or EPA Test Method 415.1, Total Organic Carbon. If there is a discrepancy between the information on the certified product data sheet and the results of the EPA Test Method 415.1, compliance status shall be based on the Method 415.1 results.

**c. Molds:** The following are laboratory methods for determining the organic content of sand in a cured mold. Using these methods requires that an initial determination be made of the total organic carbon or the amount of loss on ignition (LOI) of the sand before the sand is combined with binder and formed into a mold.

**(1)** EPA Test Method 415.1, Total Organic Carbon, or by another Control-Officer approved, standard test-method for determining total carbon that is either an EPA-approved method or is a submethod included by an EPA test-method.

**(2)** When the percentage of organic compounds in a binder has been established to the satisfaction of the Control Officer, American Foundry Society Procedure 117-87-S, Loss On Ignition, may be used.

**503.3** Control efficiency of an emission control device required by Section 301.1 shall be determined according to EPA Reference Method 25 or an applicable submethod of Method 25, 25A, or 25 B (Title 40, CFR Part 60, Appendix A).

**503.4** Capture efficiency of an emission control device required by Section 301.1 shall be determined by mass balance in combination with ventilation/draft rate determinations referenced in subsection 503.5, or shall be done in accordance with US EPA Test Methods 204, 204a, 204b, 204c, 204d, 204e, and 204f, Appendix M, 40 CFR 51. This EPA document is incorporated by reference and is available at the Maricopa County Air Quality Department, 1001 ~~North~~ N. Central ~~Avenue~~ Ave., Phoenix, Arizona, 85004~~,~~. ~~or by calling (602) 506-6700 for information.~~

**503.5** Ventilation/draft rates of an emission control device required by Section 301.1 shall be determined by EPA Reference Methods 2, 2A, 2C, or 2D (40 CFR Part 60, Appendix A).

**503.6** **Calculations Determining Compliance With Alternative Compliance Method, Subsection 301.2:** Subsection 301.2 requires a determination of the facility-wide, period-weighted average-ratio of the organic mass of all the binders used as compared to the mass of sand receiving the binders during an averaging period. This shall be calculated using the following equation:

Organics to binder-sand ratio =

$$\frac{M_1 O_1 + M_2 O_2 + \ldots\ldots + M_n O_n}{S_{D1} + S_{D2} + \ldots\ldots + S_{DL} + M_1(1 - O_1) + M_2(1 - O_2) + \ldots + M_n(1 - O_n)}$$

$O_T$ (Total Organic Content) = $M_1O_1 + M_2O_2 + \ldots\ldots\ldots + M_nO_n$

where:

$O_T$ = Total organic material in the binder system(s) used during the averaging period, in kilograms (or lbs).

$O_1$ = The organic ratio of the first binder formulation used during the averaging period, expressed in kilograms organic compounds per kg. of binder (lb/lb).

$O_2$ = The organic ratio of the second binder formulation used during the averaging period, expressed in kilograms organic compounds per kg. of binder (lb/lb).

$O_n$ = The organic ratio of the very last binder formulation used during the averaging period, expressed in kilograms organic compounds per kg. of binder (lb/lb) when a total of "n" formulations were used.

$M_1$ = The total mass, used throughout the period, of the first binder formulation used that period, expressed in kg. or lb.

$M_2$ = The total mass used throughout the period, of the second binder formulation used that period, in kg. or lb.

$M_n$ = The total mass, used throughout the period, of the very last binder formulation used that period, when a total of "n" formulations were used, expressed in kg. or lb.

$S_{D1}$ = The mass of sand used in day one of the averaging period.

$S_{D2}$ = The mass of sand used in day two of the averaging period.

$S_{DL}$ = The mass of sand used on the last day of the averaging period.

**503.7 Daily-Weighted Average VOC Content of Mold Washes:** The daily weighted average VOC content of all the mold-wash used facility-wide during a facility-specified workday, a quantification required in order to comply with subsection 301.3b, shall be calculated using the following equation and be expressed in grams of VOC per liter of mold-wash (or lbs./gal).

$$VOC_W = \frac{V_1 C_1 + V_2 C_2 + \ldots + V_n C_n + M_{va}}{V_1 + V_2 + \ldots V_n + V_{va} + V_{sa}}$$

where:

VOCw = The daily-weighted average VOC content of all "n" mold-wash formulations ("a" through "n") used during a workday throughout the facility expressed in grams of VOC per liter of mold-wash (or lb/gal).

C1 = The VOC content of the first mold-wash formulation used during a workday in grams per liter of mold-wash (lb/gal).

C2 = The VOC content of the second mold-wash formulation used during a workday, in grams per liter of mold-wash (or lb/gal).

Cn = The VOC content of the very last mold-wash formulation used during a workday when a total of "n" formulations were used, and the only formulation remaining to be accounted for. It is expressed in grams VOC per liter of mold-wash-formulation "n" (or lb/gal).

Mva= The total mass of VOC added to any previously formulated mold-wash used during the course of this workday not otherwise accounted for in VOC-content of formulations (expressed in grams or lbs). This includes the VOC portion of added materials which also contain non-VOC components.

V1 = The total volume used throughout the workday of the first mold-wash formulation used that day, expressed in liters (or gal).

V2 = The total volume used throughout the workday of the second mold-wash formulation used that day, in liters (or gal).

Vn = The total volume used throughout the workday of the very last mold-wash formulation used that workday, when a total of "n" formulations were used. It is expressed in liters (or gal) of formulation "n".

Vva = The total volume of VOC in liters (or gal) added to any and all previously formulated mold-wash during the course of this workday for make-up, viscosity reducing, or other purpose(s), not otherwise accounted for in the VOC-content of formulations.

Vsa = The total volume of solids in liters (or gal) added during a workday to any already formulated mold-washes used during the workday such solids are added.

## REGULATION III - CONTROL OF AIR CONTAMINANTS

## RULE 348
## AEROSPACE MANUFACTURING AND REWORK OPERATIONS

### INDEX


**SECTION 100 – GENERAL**

101 PURPOSE

102 APPLICABILITY

**SECTION 200 – DEFINITIONS**

201 ABLATIVE COATING

202 ADHESION PROMOTER

203 ADHESIVE BONDING PRIMER

204 AEROSOL COATING

205 AEROSPACE VEHICLE OR COMPONENT

206 AIRCRAFT FLUID SYSTEMS

207 AIRCRAFT TRANSPARENCY

208 ANTICHAFE COATING

209 ANTIQUE AEROSPACE VEHICLE OR COMPONENT

210 AQUEOUS CLEANING SOLVENT

211 BONDING MASKANT

212 CHEMICAL AGENT-RESISTANT COATING (CARC)

213 CHEMICAL MILLING MASKANT

214 CLEANING OPERATION

215 CLEANING SOLVENT

216 CLEAR COATING

217 CLOSED-CYCLE DEPAINTING SYSTEM

218 COATING

219 COATING OPERATION

220 COATING UNIT

221 COMMERCIAL EXTERIOR AERODYNAMIC STRUCTURE PRIMER

222 COMMERCIAL INTERIOR ADHESIVE

223 COMPATIBLE SUBSTRATE PRIMER

224 CONFINED SPACE

225 CORROSION PREVENTION SYSTEM
226 CRITICAL USE AND LINE SEALER MASKANT
227 CRYOGENIC FLEXIBLE PRIMER
228 CRYOPROTECTIVE COATING
229 CYANOACRYLATE ADHESIVE
230 ELECTRIC OR RADIATION-EFFECT COATING
231 ELECTROSTATIC DISCHARGE AND ELECTROMAGNETIC INTERFERENCE (EMI) COATING
232 ELEVATED TEMPERATURE SKYDROL RESISTANT COMMERCIAL PRIMER
233 EMISSION CONTROL SYSTEM ( ECS )
234 EPOXY POLYAMIDE TOPCOAT
235 FIRE-RESISTANT (INTERIOR) COATING
236 FLEXIBLE PRIMER
237 FLIGHT TEST COATING
238 FLUSH CLEANING
239 FUEL TANK ADHESIVE
240 FUEL TANK COATING
241 GENERAL AVIATION
242 GENERAL AVIATION REWORK FACILITY
243 GRAMS PER LITER VOC
244 HAND-WIPE CLEANING OPERATION
245 HIGH TEMPERATURE COATING
246 HIGH VOLUME LOW PRESSURE (HVLP) SPRAY EQUIPMENT
247 INSULATION COVERING
248 INTERMEDIATE RELEASE COATING
249 LACQUER
250 LEAK
251 LIMITED ACCESS SPACE
252 METALIZED EPOXY COATING
253 MOLD RELEASE
~~254 NON-PRECURSOR ORGANIC COMPOUNDS~~
~~255~~ 254 NONSTRUCTURAL ADHESIVE
~~256~~ 255 OPERATING PARAMETER VALUE
~~257~~ 256 OPTICAL ANTI-REFLECTION COATING
~~258~~ 257 PART MARKING COATING
~~259~~ 258 PRETREATMENT COATING
~~260~~ 259 PRIMER

~~261~~ 260 RADOME

~~262~~ 261 RAIN EROSION-RESISTANT COATING

~~263~~ 262 RESEARCH AND DEVELOPMENT

~~264~~ 263 RESIN SURFACE SEALER

~~265~~ 264 ROCKET MOTOR BONDING ADHESIVE

~~266~~ 265 ROCKET MOTOR NOZZLE COATING

~~267~~ 266 RUBBER-BASED ADHESIVE

~~268~~ 267 SCALE INHIBITOR

~~269~~ 268 SCREEN PRINT INK

~~270~~ 269 SEAL COAT MASKANT

~~271~~ 270 SEALANT

~~272~~ 271 SELF-PRIMING TOPCOAT

~~273~~ 272 SEMIAQUEOUS CLEANING SOLVENT

~~274~~ 273 SILICONE INSULATION MATERIAL

~~275~~ 274 SOLID FILM LUBRICANT

~~276~~ 275 SOLIDS

~~277~~ 276 SPACE VEHICLE

~~278~~ 277 SPECIALIZED FUNCTION COATING

~~279~~ 278 SPECIALTY COATING

~~280~~ 279 SPRAY GUN

~~281~~ 280 STRUCTURAL AUTOCLAVABLE ADHESIVE

~~282~~ 281 STRUCTURAL NONAUTOCLAVABLE ADHESIVE

~~283~~ 282 SURFACE PREPARATION

~~284~~ 283 TEMPORARY PROTECTIVE COATING

~~285~~ 284 THERMAL CONTROL COATING

~~286~~ 285 TOPCOAT

~~287~~ 286 TOUCH-UP AND/OR REPAIR OPERATIONS

~~288~~ 287 VOC COMPOSITE PARTIAL VAPOR PRESSURE

~~289 VOLATILE ORGANIC COMPOUND (VOC)~~

~~290~~ 288 WATERBORNE (WATER-REDUCIBLE) COATING

~~291~~ 289 WET FASTENER INSTALLATION COATING

~~292~~ 290 WING COATING

**SECTION 300 – STANDARDS**

301 LIMITATIONS - VOC EMISSIONS

302 EMISSION CONTROL SYSTEM

303 REQUIREMENTS FOR AIR POLLUTION CONTROL EQUIPMENT

304 APPLICATION EQUIPMENT

305 SOLVENT CLEANING
306 SPRAY GUN CLEANING
307 VOC CONTAINMENT AND DISPOSAL
308 EXEMPTIONS

**SECTION 400 - ADMINISTRATIVE REQUIREMENTS**
401 COMPLIANCE SCHEDULE

**SECTION 500 - MONITORING AND RECORDS**
501 RECORDKEEPING AND REPORTING
502 COMPLIANCE DETERMINATION

**Adopted 04/07/99**
**Revised 09/25/13**

**MARICOPA COUNTY**
**AIR POLLUTION CONTROL REGULATIONS**

**REGULATION III - CONTROL OF AIR CONTAMINANTS**

**RULE 348**
**AEROSPACE MANUFACTURING AND REWORK OPERATIONS**

**SECTION 100 – GENERAL**

**101** **PURPOSE:** To limit the emission of volatile organic compounds (VOCs) from the manufacture and rework of aerospace vehicles and their components.

**102** **APPLICABILITY:** This rule applies to the manufacture or rework of commercial, civil, or military aerospace vehicles. This rule does not apply to research and development, quality control, laboratory testing, electronic parts and assemblies (except for cleaning and coating of completed assemblies) and to rework operations performed on antique aerospace vehicles or components or space vehicles.

**SECTION 200 – DEFINITIONS:** For the purpose of this rule, the following definitions shall apply~~:~~, in addition to those definitions found in Rule 100 (General Provisions and Definitions) of these rules. In the event of any inconsistency between any of the Maricopa County air pollution control rules, the definitions in this rule take precedence.

**201** **ABLATIVE COATING -** A coating that chars when exposed to open flame or extreme temperatures, as would occur during the failure of an engine casing or during aerodynamic

heating. The ablative char surface serves as an insulative barrier, protecting adjacent components from the heat or open flame.

**202** **ADHESION PROMOTER -** A very thin coating applied to a substrate to promote wetting and form a chemical bond with the subsequently applied material.

**203** **ADHESIVE BONDING PRIMER -** A primer applied in a thin film to aerospace components for the purpose of corrosion inhibition and increased adhesive bond strength by attachment. There are two categories of adhesive bonding primers, primers with a design cure at 250°F or below and primers with a design cure above 250°F.

**204** **AEROSOL COATING -** A hand-held, pressurized, nonrefillable container that expels an adhesive or a coating in a finely divided spray when a valve on the container is depressed.

**205** **AEROSPACE VEHICLE OR COMPONENT -** Any fabricated part, processed part, assembly of parts, or completed unit, with the exception of electronic components, of any aircraft, including but not limited to airplanes, helicopters, missiles, rockets, and space vehicles.

**206** **AIRCRAFT FLUID SYSTEMS -** Those systems that handle hydraulic fluids, fuel, cooling fluids, or oils.

**207** **AIRCRAFT TRANSPARENCY –** The aircraft windshield, canopy, passenger windows, lenses and other components which are constructed of transparent materials.

**208** **ANTICHAFE COATING -** A coating applied to areas of moving aerospace components that may rub during normal operations or installation.

**209** **ANTIQUE AEROSPACE VEHICLE OR COMPONENT -** An antique aircraft, as defined by 14 CFR Part 45, or components thereof. An antique aerospace vehicle would not routinely be in commercial or military service in the capacity for which it was designed.

**210** **AQUEOUS CLEANING SOLVENT -** A solvent in which water is at least 80 percent of the solvent as applied.

**211** **BONDING MASKANT -** A temporary coating used to protect selected areas of aerospace parts from strong acid or alkaline solutions during processing for bonding.

**212** **CHEMICAL AGENT-RESISTANT COATING (CARC) -** An exterior topcoat designed to withstand exposure to chemical warfare agents or the decontaminates used in these agents.

**213** **CHEMICAL MILLING MASKANT -** A coating that is applied directly to aluminum components to protect surface areas when chemical milling the component with a Type I or II etchant. This does not include bonding maskants, line sealers, and critical use and seal coat maskants. Additionally, maskants that must be used on an individual part or subassembly with a combination of Type I or II etchants and any of the above types of maskants (e.g., bonding, line sealers, and critical use and seal coat) are not included. Maskants that are defined as specialty coatings are not included under this definition.

**214** **CLEANING OPERATION** - Any operation that removes dirt or impurities from aerospace vehicles, components, or coating equipment. This may include spray gun, hand-wipe, and flush cleaning operations.

**215** **CLEANING SOLVENT -** A liquid material used for hand-wipe, spray gun, or flush cleaning. This definition excludes solutions that contain VOCs at a concentration less than 0.1% for carcinogenic VOCs or 1.0% for noncarcinogenic VOCs, as determined from manufacturers' representations.

**216** **CLEAR COATING -** A transparent coating usually applied over a colored opaque coating, metallic substrate, or placard to give improved gloss and protection to the color coat. In some cases, a clearcoat refers to any transparent coating without regard to substrate.

**217** **CLOSED-CYCLE DEPAINTING SYSTEM -** A dust free, automated process that removes permanent coating in small sections at a time, and maintains a continuous vacuum around the area(s) being depainted to capture emissions.

**218** **COATING -** A material that is applied to the surface of an aerospace vehicle or component to form a decorative or functional solid film, or the solid film itself.

**219** **COATING OPERATION –** Using a spray booth, tank, or other enclosure or any area, such as a hangar, for applying a single type of coating (e.g., primer); using the same spray booth for applying another type of coating (e.g., topcoat) constitutes a separate coating operation for which compliance determinations are performed separately.

**220** **COATING UNIT -** A series of one or more coating applicators and any associated drying area and/or oven wherein a coating is applied, dried, and/or cured. A coating unit ends at the point where the coating is dried or cured, or prior to any subsequent application of a different coating. It is not necessary to have an oven or flashoff area to be included in this definition.

**221** **COMMERCIAL EXTERIOR AERODYNAMIC STRUCTURE PRIMER -** A primer used on aerodynamic components and structures that protrude from the fuselage, such as wings and

attached components, control surfaces, horizontal stabilizers, vertical fins, wing-to-body fairings, antennae, and landing gear and doors, for the purpose of extended corrosion protection and enhanced adhesion.

**222** **COMMERCIAL INTERIOR ADHESIVE -** Materials used in the bonding of passenger cabin interior components. These components must meet the FAA fireworthiness requirements.

**223** **COMPATIBLE SUBSTRATE PRIMER -** Either compatible Epoxy Primer or Adhesive Primer. Compatible Epoxy Primer is primer that is compatible with the filled elastomeric coating and is epoxy based. The compatible substrate primer is an epoxy-polyamide primer used to promote adhesion of elastomeric coatings such as impact-resistant coatings. Adhesive Primer is a coating that (1) inhibits corrosion and serves as a primer applied to bare metal surfaces or prior to adhesive application, or (2) is applied to surfaces that can be expected to contain fuel. Fuel tank coatings are excluded from this category.

**224** **CONFINED SPACE -** A space that (1) is large enough and so configured that an employee can bodily enter and perform assigned work; (2) is limited or restricted for entry or exit (for example, fuel tanks, fuel vessels, and other spaces that have limited entry); and (3) is not suitable for continuous employee occupancy.

**225** **CORROSION PREVENTION SYSTEM -** A coating system that provides corrosion protection by displacing water and penetrating mating surfaces, forming a protective barrier between the metal surface and moisture. Coatings containing oils or waxes are excluded from this category.

**226** **CRITICAL USE AND LINE SEALER MASKANT -** A temporary coating, not covered under other maskant categories, used to protect selected areas of aerospace parts from strong acid or alkaline solutions such as those used in anodizing, plating, chemical milling and processing of magnesium, titanium, or high strength steel, high precision aluminum chemical milling of deep cuts, and aluminum chemical milling of complex shapes. Materials used for repairs or to bridge gaps left by scribing operations (i.e., line sealer) are also included in this category.

**227** **CRYOGENIC FLEXIBLE PRIMER -** A primer designed to provide corrosion resistance, flexibility, and adhesion of subsequent coating systems when exposed to loads up to and surpassing the yield point of the substrate at cryogenic temperatures (-275°F and below).

**228** **CRYOPROTECTIVE COATING -** A coating that insulates cryogenic or subcooled surfaces to limit propellant boil-off, maintain structural integrity of metallic structures during ascent or re-entry, and prevent ice formation.

229 **CYANOACRYLATE ADHESIVE -** A fast-setting, single component adhesive that cures at room temperature. Also known as "super glue."

230 **ELECTRIC OR RADIATION-EFFECT COATING -** A coating or coating system engineered to interact, through absorption or reflection, with specific regions of the electromagnetic energy spectrum, such as the ultraviolet, visible, infrared, or microwave regions. Uses include, but are not limited to, lightning strike protection, electromagnetic pulse (EMP) protection, and radar avoidance. Coatings that have been designated "classified" by the Department of Defense are exempt.

231 **ELECTROSTATIC DISCHARGE AND ELECTROMAGNETIC INTERFERENCE (EMI) COATING -** A coating applied to space vehicles, missiles, aircraft radomes, and helicopter blades to disperse static energy or reduce electromagnetic interference.

232 **ELEVATED TEMPERATURE SKYDROL RESISTANT COMMERCIAL PRIMER -** A primer applied primarily to commercial aircraft (or commercial aircraft adapted for military use) that must withstand immersion in phosphate-ester (PE) hydraulic fluid (Skydrol 500b or equivalent) at the elevated temperature of 150°F for 1,000 hours.

233 **EMISSION CONTROL SYSTEM (ECS ) -** A system, approved in writing by the Control Officer, designed and operated in accordance with good engineering practice to reduce emissions of volatile organic compounds. Such system consists of an emissions collection subsystem and an emissions processing subsystem.

234 **EPOXY POLYAMIDE TOPCOAT -** A coating used where harder films are required or in some areas where engraving is accomplished in camouflage colors.

235 **FIRE-RESISTANT (INTERIOR)COATING -** A coating applied to the interior cabin of an airplane that prevents the interior cabin from being easily ignited and from burning with extreme rapidity.

236 **FLEXIBLE PRIMER -** A primer that meets flexibility requirements such as those needed for adhesive bond primed fastener heads or on surfaces expected to contain fuel.

237 **FLIGHT TEST COATING -** A coating applied to aircraft other than missiles or single-use aircraft prior to flight testing to protect the aircraft from corrosion and to provide required marking during flight test evaluation.

238 **FLUSH CLEANING –** Removal of contaminants such as dirt, grease, oil, and coatings from an aerospace vehicle or component or coating equipment by passing solvent over, into, or through the

item being cleaned. The solvent simply may be poured into the item being cleaned and then drained or assisted by air or hydraulic pressure or by pumping. Hand-wipe cleaning operations where wiping, scrubbing, mopping or other hand action are used are not included.

**239** **FUEL TANK ADHESIVE -** An adhesive used to bond components exposed to fuel and must be compatible with fuel tank coatings.

**240** **FUEL TANK COATING -** A coating applied to fuel tank components for the purpose of corrosion and/or bacterial growth inhibition and to assure sealant adhesion in extreme environmental conditions.

**241** **GENERAL AVIATION (GA) -** The segment of civil aviation that encompasses all facets of aviation except air carriers, commuters and military. General aviation includes charter and corporate-executive transportation, instruction, rental, aerial application, aerial observation, business, pleasure and other special uses.

**242** **GENERAL AVIATION REWORK FACILITY -** Any aerospace facility with the majority of its revenues resulting from the reconstruction, repair, maintenance, repainting, conversion, or alteration of general aviation aerospace vehicles or components.

**243** **GRAMS PER LITER VOC -** A weight of VOC per combined volume of VOC and coating solids, less water and exempt compounds, and can be calculated by the following equation:

$$\text{grams per liter} = \frac{W_s - W_w - W_{es}}{V_s - V_w - V_{es}}$$

$W_s$ = weight of volatile organic compounds in grams

$W_w$ = weight of water in grams

$W_{es}$ = weight of exempt compounds in grams

$V_s$ = volume of material in liters

$V_w$ = volume of water in liters

$V_{es}$ = volume of exempt compounds in liters

**244** **HAND-WIPE CLEANING OPERATION -** Removing contaminants such as dirt, grease, oil, and coatings from an aerospace vehicle or component by physically rubbing it with a material such as a rag, paper, or cotton swab that has been moistened with a cleaning solvent. This definition excludes the use of rags or other material used only to dry excess solvent from a part or product after removal from a vat or any other solvent bath.

**245** **HIGH TEMPERATURE COATING -** A coating designed to withstand temperatures of more than 350°F.

**246** **HIGH VOLUME LOW PRESSURE (HVLP) SPRAY EQUIPMENT –** Spray equipment that is used to apply coating by a spray gun that operates at 10.0 psig of atomizing air pressure or less at the air cap.

**247** **INSULATION COVERING -** Material that is applied to foam insulation to protect the insulation from mechanical or environmental damage.

**248** **INTERMEDIATE RELEASE COATING -** A thin coating applied beneath topcoats to assist in removing the topcoat in depainting operations and generally to allow the use of less hazardous depainting methods.

**249** **LACQUER -** A clear or pigmented coating formulated with a nitrocellulose or synthetic resin to dry by evaporation without a chemical reaction. Lacquers are resoluble in their original solvent.

**250** **LEAK -** A liquid that is allowed to seep or drip or to otherwise enter or escape in either of the following ways:

**a.** Three or more drops, including misting and clouding; or

**b.** A puddle greater than one square inch.

**251** **LIMITED ACCESS SPACE -** Internal surfaces or passages of an aerospace vehicle or component that cannot be reached without the aid of an airbrush or a spray gun extension for the application of coatings.

**252** **METALIZED EPOXY COATING -** A coating that contains relatively large quantities of metallic pigmentation for appearance and/or added protection.

**253** **MOLD RELEASE -** A coating applied to a mold surface to prevent the molded piece from sticking to the mold as it is removed.

~~**254** **NON-PRECURSOR ORGANIC COMPOUNDS** - Any of the organic compounds which have been designated by the EPA as having negligible photochemical reactivity. EPA designates such compounds as "exempt". A listing of these compounds is found in Rule 100.~~

~~**255**~~**254** **NONSTRUCTURAL ADHESIVE -** An adhesive that bonds nonload bearing aerospace components in noncritical applications and is not covered in any other specialty adhesive categories.

~~256~~255 **OPERATING PARAMETER VALUE -** A minimum or maximum value established for a control equipment or process parameter that, if achieved by itself or in combination with one or more other operating parameter values, determines that an owner or operator has complied with an applicable emission limitation.

~~257~~256 **OPTICAL ANTI-REFLECTION COATING -** A coating with a low reflectance in the infrared and visible wavelength ranges that is used for antireflection on or near optical and laser hardware.

~~258~~257 **PART MARKING COATING –** Coatings or inks used to make identifying markings on materials, components, and/or assemblies. These markings may be either permanent or temporary.

~~259~~258 **PRETREATMENT COATING -** An organic coating that contains at least 0.5 percent acids by weight and is applied directly to metal surfaces to provide surface etching, corrosion resistance, adhesion, and ease of stripping.

~~260~~259 **PRIMER –** The first layer and any subsequent layers of identically formulated coating applied to the surface of an aerospace vehicle or component. Primers are typically used for corrosion prevention, protection from the environment, functional fluid resistance, and adhesion of subsequent coatings. Primers that are defined as specialty coatings are not included under this definition.

~~261~~260 **RADOME –** The nonmetallic protective housing for electromagnetic transmitters and receivers (e.g., radar, electronic countermeasures, etc.).

~~262~~261 **RAIN EROSION-RESISTANT COATING -** A coating or coating system used to protect the leading edges of parts such as flaps, stabilizers, radomes, engine inlet nacelles, etc. against erosion caused by rain impact during flight.

~~263~~262 **RESEARCH AND DEVELOPMENT -** An operation whose primary purpose is for research and development of new processes and products and that is conducted under the close supervision of technically trained personnel and is not involved in the manufacture of final or intermediate products for commercial purposes, except in a de minimis manner.

~~264~~263 **RESIN SURFACE SEALER** - A coating designed or intended to seal the pores of high porosity cast surfaces of aerospace components composed of magnesium, aluminum or their alloys to prevent corrosion.

~~265~~264 **ROCKET MOTOR BONDING ADHESIVE -** An adhesive used in rocket motor bonding applications.

~~266~~265 **ROCKET MOTOR NOZZLE COATING -** A catalyzed epoxy coating system used in elevated temperature applications on rocket motor nozzles.

~~267~~266 **RUBBER-BASED ADHESIVE -** A quick setting contact cement that provides a strong, yet flexible bond between two mating surfaces that may be of dissimilar materials.

~~268~~267 **SCALE INHIBITOR -** A coating that is applied to the surface of a part prior to thermal processing to inhibit the formation of scale.

~~269~~268 **SCREEN PRINT INK -** Inks used in screen printing processes during fabrication of decorative laminates and decals.

~~270~~269 **SEAL COAT MASKANT -** An overcoat applied over a maskant to improve abrasion and chemical resistance during production operations.

~~271~~270 **SEALANT -** A material used to prevent the intrusion of water, fuel, air, or other liquids or solids from certain areas of aerospace vehicles or components. There are two categories of sealants: extrudable/rollable/brushable sealants and sprayable sealants.

~~272~~271 **SELF-PRIMING TOPCOAT -** A topcoat that is applied directly to an uncoated aerospace vehicle or component for purposes of corrosion prevention, environmental protection, and functional fluid resistance. More than one layer of identical coating formulation may be applied to the vehicle or component. The coating is not subsequently topcoated with any other product formulation.

~~273~~272 **SEMIAQUEOUS CLEANING SOLVENT -** A solvent wherein at least 60% of the solvent solution as applied must be water.

~~274~~273 **SILICONE INSULATION MATERIAL -** An insulating material applied to exterior metal surfaces for protection from high temperatures caused by atmospheric friction or engine exhaust. These materials differ from ablative coatings in that they are not "sacrificial."

~~275~~274 **SOLID FILM LUBRICANT -** A very thin coating consisting of a binder system containing as its chief pigment material one or more of the following: molybdenum, graphite, polytetrafluoroethylene (PTFE), or other solids that act as a dry lubricant between faying surfaces.

~~276~~275 **SOLIDS –** The nonvolatile portion of the coating that after drying makes up the dry film.

~~277~~276 **SPACE VEHICLE -** A man-made device, either manned or unmanned, designed for operation beyond earth's atmosphere. This definition includes integral equipment such as models, mock-ups, prototypes, molds, jigs, tooling, hardware jackets, and test coupons. Also included is auxiliary

equipment associated with test, transport, and storage that through contamination can compromise the space vehicle performance.

~~278~~277 **SPECIALIZED FUNCTION COATING -** A coating that fulfills extremely specific engineering requirements that are limited in application and are characterized by low volume usage. This category excludes coatings covered in other Specialty Coating categories.

~~279~~278 **SPECIALTY COATING -** A coating that, even though it meets the definition of a primer, topcoat, or self-priming topcoat, has additional performance criteria beyond those of primers, topcoats, and self-priming topcoats for specific applications. These performance criteria may include, but are not limited to, temperature or fire resistance, substrate compatibility, antireflection, temporary protection or marking, sealing, adhesively joining substrates, or enhanced corrosion protection.

~~280~~279 **SPRAY GUN -** A device that atomizes a coating or other material and projects the particulates or other material onto a substrate.

~~281~~280 **STRUCTURAL AUTOCLAVABLE ADHESIVE -** An adhesive used to bond load carrying aerospace components that is cured by heat and pressure in an autoclave.

~~282~~281 **STRUCTURAL NONAUTOCLAVABLE ADHESIVE -** An adhesive cured under ambient conditions that is used to bond load carrying aerospace components or other critical functions, such as nonstructural bonding in the proximity of engines.

~~283~~282 **SURFACE PREPARATION –** The removal of contaminants from the surface of an aerospace vehicle or component or the activation or reactivation of the surface in preparation for the application of a coating.

~~284~~283 **TEMPORARY PROTECTIVE COATING -** A coating applied to provide scratch or corrosion protection during manufacturing, storage, or transportation. Two types include peelable protective coatings and alkaline removable coatings. These materials are not intended to protect against strong acid or alkaline solutions. Coatings that provide this type of protection from chemical processing are not included in this category.

~~285~~284 **THERMAL CONTROL COATING -** A coating formulated with specific thermal conductive or radiative properties to permit temperature control of the substrate.

~~286~~285 **TOPCOAT -** A coating that is applied over a primer on an aerospace vehicle or component for appearance, identification, camouflage, or protection. Topcoats that are defined as specialty coatings are not included under this definition.

~~287~~286 **TOUCH-UP AND/OR REPAIR OPERATIONS -** That portion of the coating operation that is the incidental application of coating used to cover minor imperfections in the coating finish or to achieve complete coverage. This definition includes out-of-sequence or out-of-cycle coating.

~~288~~287 **VOC COMPOSITE PARTIAL VAPOR PRESSURE -** The sum of the partial pressures of the compounds defined as VOC's and is determined by the following calculation:

$$PP_s = \frac{\sum_{i=1}^{n} \frac{W_i}{MW_i} \times VP_i}{\frac{W_w}{MW_w} + \frac{W_e}{MW_e} + \sum_{i=1}^{n} \frac{W_i}{MW_i}}$$

$W_i$ = Weight of the "i"th VOC compound, grams.

$W_w$ = Weight of water, grams.

$W_e$ = Weight of non-HAP, non-VOC compound, grams.

$MW_i$ = Molecular weight of the "i"th VOC compound, g/g-mole.

$MW_w$ = Molecular weight of water, g/g-mole.

$MW_e$ = Molecular weight of exempt compound, g/g-mole.

$PP_c$ = VOC composite partial pressure at 20°C, mm Hg.

$VP_i$ = Vapor pressure of the "i"th VOC compound at 20°, mm Hg.

~~289~~ ~~**VOLATILE ORGANIC COMPOUND (VOC)** - Any organic compound which participates in atmospheric photochemical reactions, except non-precursor organic compounds.~~

~~290~~288 **WATERBORNE (WATER-REDUCIBLE) COATING -** A coating which contains more than 5 percent water by weight as applied in its volatile fraction.

~~291~~289 **WET FASTENER INSTALLATION COATING -** A primer or sealant applied by dipping, brushing, or daubing to fasteners that are installed before the coating is cured.

~~292~~290 **WING COATING -** A corrosion-resistant topcoat that is resilient enough to withstand the flexing of the wings.

**SECTION 300 – STANDARDS**

**301** **LIMITATIONS - VOC EMISSIONS:** No person shall apply any surface coating including any VOC-containing materials added to the original coating supplied by the manufacturer, which

contain VOC in excess of the limits in Tables 1a and 1b, unless the emissions are controlled in accordance with the provisions of Section 302 of this rule.

**Table 1a**

| PRIMER or TOPCOAT TYPE | VOC LIMITS (g/L) |
|---|---|
| All Primers (except Specialty or General Aviation Rework Facility Primers) | 350 g/l |
| All Topcoats (except Specialty or General Aviation Rework Facility Topcoats) | 420 g/l |
| General Aviation Rework Facility Primers | 540 g/l |
| General Aviation Rework Facility Topcoats | 540 g/l |

**Table 1b**

| Type of Specialty Coating | VOC Limits (g/L) |
|---|---|
| Ablative Coating | 600 |
| Adhesion Promoter | 890 |
| Adhesive Bonding Primers: Cured at 250°F or below | 850 |
| Adhesive Bonding Primers: Cured above 250°F | 1030 |
| Adhesives: Commercial Interior | 760 |
| Adhesives: Cyanoacrylate | 1,020 |
| Adhesives: Fuel Tank | 620 |
| Adhesives: Nonstructural | 360 |
| Adhesives: Rocket Motor Bonding | 890 |
| Adhesives: Rubber-based | 850 |
| Adhesives: Structural Autoclavable | 60 |
| Adhesives: Structural Nonautoclavable | 850 |
| Antichafe Coating | 660 |
| Bearing Coating Compounds | 620 |
| Caulking and Smoothing Compounds | 850 |
| Chemical Agent-Resistant Coating | 550 |
| Clear Coating | 720 |
| Commercial Exterior Aerodynamic Structure Primer | 350 |
| Compatible Substrate Primer | 350 |
| Corrosion Prevention Compound | 710 |
| Cryogenic Flexible Primer | 350 |
| Cryoprotective Coating | 600 |
| Coatings Related To Electromagnetism And/Or Other Radiation Electric Or Radiation-Effect Coating | 600 |

| Type of Specialty Coating | VOC Limits (g/L) |
|---|---|
| Electrostatic Discharge and Electromagnetic Interference (EMI) Coating | 800 |
| Elevated Temperature Skydrol Resistant Commercial Primer | 350 |
| Epoxy Polyamide Topcoat | 420 |
| Fire-Resistant (Interior) Coating | 800 |
| Flexible Primer | 350 |
| Flight-Test Coatings: Missile or Single Use Aircraft | 420 |
| Flight-Test Coatings: All Other | 840 |
| Fuel-Tank Coating | 720 |
| High-Temperature Coating | 850 |
| Insulation Covering | 740 |
| Intermediate Release Coating | 750 |
| Lacquer | 830 |
| Maskant: Bonding Maskant | 420 |
| Maskant: Critical Use and Line Sealer Maskant | 420 |
| Maskant: Seal Coat Maskant | 420 |
| Metallized Epoxy Coating | 740 |
| Mold Release | 780 |
| Optical Anti-Reflective Coating | 750 |
| Part Marking Coating | 850 |
| Pretreatment Coating | 780 |
| Rain Erosion-Resistant Coating | 420 |
| Resin Surface Sealer | 695 |
| Rocket Motor Nozzle Coating | 660 |
| Scale Inhibitor | 880 |
| Screen Print Ink | 840 |
| Sealants: Extrudable/Rollable/Brushable Sealant | 240 |
| Sealants: Sprayable Sealant | 600 |
| Self-priming Topcoat | 420 |
| Silicone Insulation Material | 850 |
| Solid Film Lubricant | 880 |
| Specialized Function Coating | 890 |
| Temporary Protective Coating | 250 |
| Thermal Control Coating | 800 |
| Wet Fastener Installation Coating | 675 |

| Type of Specialty Coating | VOC Limits (g/L) |
|---|---|
| Wing Coating | 420 |

**302** **EMISSION CONTROL SYSTEM:** As an alternative to meeting the applicable coating VOC limits set forth in Section 301, an operator can comply with this rule by operating an Emission Control System (ECS) approved by the Control Officer, provided that the control system has a combined VOC emissions capture and control equipment efficiency of at least 81 percent by weight.

**303** **REQUIREMENTS FOR AIR POLLUTION CONTROL EQUIPMENT:**

**303.1** **Operation And Maintenance (O&M) Plan Required For ECS:**

**a.** An owner or operator shall provide and maintain (an) O&M Plan(s) for any ECS, any other emission processing equipment, and any ECS monitoring devices that are used pursuant to this rule or to an air pollution control permit.

**b.** The owner or operator shall submit to the Control Officer for approval the O&M Plans of each ECS and each ECS monitoring device that is used pursuant to this rule.

**c.** An owner or operator of a facility that is required to have an O&M Plan pursuant to this subsection must fully comply with all O&M Plans that the owner or operator has submitted for approval, but which have not yet been approved, unless notified otherwise by the Control Officer in writing.

**304** **APPLICATION EQUIPMENT:** A person shall use one or more of the following application techniques in applying any primer or topcoat to aerospace vehicles or components: flow/curtain coat; dip coat; roll coating; brush coating; cotton-tipped swab application; electrodeposition (DIP) coating; high volume low pressure (HVLP) spraying; electrostatic spray; or other coating application methods that can demonstrate and be approved by the Control Officer as having at least a 65% transfer efficiency, which is equivalent to the transfer efficiency of HVLP or electrostatic spray application methods.

**305** **SOLVENT CLEANING:** The following requirements apply to solvent cleaning operations:

**305.1** **Hand-Wipe Cleaning**. Cleaning solvents used in hand-wipe cleaning operations shall utilize an aqueous cleaning solvent, or have a VOC composite vapor pressure less than or equal to 45 millimeters of mercury (mm Hg) at 20°C.

**305.2** **Flush Cleaning**. For cleaning solvents used in the flush cleaning of parts, assemblies, and coating unit components, the used cleaning solvent (except for semiaqueous cleaning solvents) must be emptied into an enclosed container or collection system that is kept closed when not in use or captured with wipers, provided they comply with the VOC handling requirements of Section 307 of this rule.

**305.3** **Dip Cleaning.** Dip cleaning using solvents is subject to the requirements of Rule 331.

**306** **SPRAY GUN CLEANING:** All spray guns must be cleaned by one or more of the following methods:

**306.1** Enclosed spray gun cleaning system, provided that it is kept closed when not in use and leaks are repaired within 14 days from when the leak is first discovered. If the leak is not repaired by the 15th day after detection, the solvent shall be removed and the enclosed cleaner shall be shut down until the leak is repaired or its use is permanently discontinued;

**306.2** Unatomized discharge of solvent into a waste container that is kept closed when not in use;

**306.3** Disassembly of the spray gun and cleaning in a vat that is kept closed when not in use; or

**306.4** Atomized spray into a waste container that is fitted with a device designed to capture atomized solvent emissions.

**307** **VOC CONTAINMENT AND DISPOSAL:** All fresh and used VOC containing material, including but not limited to cleaning solvents, coatings, thinners, rags, and their residues, shall be stored in closed, leak free, legibly labeled containers when not in use. In addition, the owner or operator must implement handling and transfer procedures to minimize spills during filling and transferring the cleaning solvent to or from enclosed systems, vats, waste containers, and other cleaning operation equipment that hold or store fresh or used cleaning solvents.

**308** **EXEMPTIONS:**

**308.1** **Coatings:** The following coatings types are exempted from the VOC limits set forth in Tables 1a and 1b in Section 301 of this rule:

**a.** Touchup coatings;

**b.** Hand-held aerosol can operations;

**c.** DOD "classified" coatings;

**d.** Coating of space vehicles; and

**e.** Low usage coatings used in separate formulations in volumes of less than 50 gallons per year with a maximum exemption of 200 gallons total for such formulations applied annually.

**308.2** **Application Equipment:** The following operations are exempt from the requirements of Section 304 of this rule:

**a.** Any situation that normally requires the use of an airbrush or an extension on the spray gun to properly reach limited access spaces;

**b.** The application of specialty coatings;

**c.** The application of coatings that contain fillers that adversely affect atomization with HVLP spray guns and that the permitting agency has determined cannot be applied by any of the application methods;

**d.** The application of coatings that normally have a dried film thickness of less than 0.0013 centimeter (0.0005 in.) and that the permitting agency has determined cannot be applied by any of the application methods;

**e.** The use of airbrush application methods for stenciling, lettering, and other identification markings; and

**f.** Touch-up and repair operations.

**308.3** **Solvent Cleaning Operations:** The following are exempt from the requirements of Section 305 of this rule:

**a.** Cleaning during the manufacture, assembly, installation, maintenance, or testing of components of breathing oxygen systems that are exposed to the breathing oxygen;

**b.** Cleaning during the manufacture, assembly, installation, maintenance, or testing of parts, subassemblies, or assemblies that are exposed to strong oxidizers or reducers (e.g., nitrogen tetroxide, liquid oxygen, hydrazine);

**c.** Cleaning and surface activation prior to adhesive bonding;

**d.** Cleaning of electronics parts and assemblies containing electronics parts;

**e.** Cleaning of aircraft and ground support equipment fluid systems that are exposed to the fluid, including air-to-air heat exchangers and hydraulic fluid systems;

**f.** Cleaning of fuel cells, fuel tanks, and confined spaces;

**g.** Surface cleaning of solar cells, coated optics, and thermal control surfaces;

**h.** Cleaning during fabrication, assembly, installation, and maintenance of upholstery, curtains, carpet, and other textile materials used on the interior of the aircraft;

**i.** Cleaning of metallic and nonmetallic materials used in honeycomb cores during the manufacture or maintenance of these cores, and cleaning of the completed cores used in the manufacture of aerospace vehicles or components;

**j.** Cleaning of aircraft transparencies, polycarbonate, or glass substrates;

**k.** Cleaning and solvent usage associated with research and development, quality control, or laboratory testing;

**l.** Cleaning operations using nonflammable liquids conducted within 5 feet of energized electrical systems. Energized electrical systems means any AC or DC electrical circuit on an assembled aircraft once electrical power is connected, including interior passenger and cargo areas, wheel wells and tail sections; and

**m.** Cleaning operations identified in an Essential Use Waiver which has been reviewed and approved by the U.S. EPA and the voting parties of the International Montreal Protocol Committee [sections 604(d)(1) and (g)(2) of the Act].

**308.4** **General Exemptions:** Cotton-tipped swabs used for very small cleaning operations and aqueous cleaning solvents are exempt from the requirements of Section 307 of this rule.

**308.5** **Small Sources:** Sections 301 and 302 of this rule shall not apply to any one facility from which the total VOC emissions from all operations subject to this rule emit less than 15 pounds (6.8 kg) per day and less than two tons (1814 kg) per year of VOCs prior to any controls.

## SECTION 400 - ADMINISTRATIVE REQUIREMENTS

**401** **COMPLIANCE SCHEDULE:** All facilities subject to this rule shall meet all applicable provisions of this rule by October 4, 1999. The intention to use an ECS in accordance with Section

302 of this rule shall be announced to the Control Officer in writing by July 6, 1999 and be in use by April 7, 2000.

## SECTION 500 - MONITORING AND RECORDS

**501 RECORDKEEPING AND REPORTING:** Any person subject to this rule shall comply with the following requirements. Records shall be retained for five years and shall be made available to the Control Officer upon request.

**501.1 Coatings:** Each owner or operator using coatings listed in Section 301 of this rule shall maintain a current list of coatings in use, VOC content as applied and records of the monthly usage of such materials in pounds per gallon or grams per liter.

**501.2 Cleaning Solvents:** Each owner or operator shall:

**a.** Maintain a current list of all aqueous and semiaqueous hand-wipe cleaning solvents used with corresponding water contents.

**b.** Maintain a current list of all vapor pressure compliant hand-wipe cleaning solvents in use with their respective vapor pressures or, for blended solvents, VOC composite vapor pressures and records of the monthly usage of such cleaning solvents.

**c.** Maintain a current list of all hand-wipe cleaning processes using cleaning solvents with a vapor pressure greater than 45 mm Hg and records of the monthly usage of such cleaning solvents.

**501.3 Enclosed Spray Gun Cleaners:** Any person using an enclosed spray gun cleaner shall visually inspect the seals and all other potential sources of leaks at least once per month while the spray gun cleaner is in operation. Records of these inspections shall be kept and made available upon request by the Control Officer.

**502 COMPLIANCE DETERMINATION:** The test methods for those subparts of 40 CFR Part 60, Appendix A adopted as of July 1, 1998, as listed below, are adopted by reference as indicated. These adoptions by reference include no future editions or amendments. Copies of test methods referenced in subsection 502.1 are available at the Maricopa County ~~Environmental Services~~ Air Quality Department, 1001 ~~North~~ N. Central ~~Avenue~~ Ave., Phoenix, AZ, 85004~~-1942~~. When more than one test method is permitted for a determination, an exceedance of the limits established in the rule determined by any of the applicable test methods constitutes a violation of this rule.

**502.1 Test Methods:**

a. **Coatings:** The VOC content of coatings (less water and less non-precursor organic compounds) as applied shall be determined by manufacturer's supplied data or Method 24 of 40 CFR part 60, Appendix A. If there is a discrepancy between the manufacturer's formulation data and the results of the Method 24 analysis, compliance shall be based on the results from the Method 24 analysis. For waterborne (water-reducible) coatings, only manufacturer's supplied data can be used to determine the VOC content of each formulation.

b. **Control Equipment:** Measurements of VOC emissions from control equipment shall be conducted in accordance with EPA Methods 18, 25, and/or 25A, 40 CFR 60, Appendix A.

## REGULATION III - CONTROL OF AIR CONTAMINANTS

## RULE 349
## PHARMACEUTICAL, COSMETIC AND VITAMIN MANUFACTURING OPERATIONS

### INDEX


**SECTION 100 – GENERAL**

101 PURPOSE
102 APPLICABILITY

**SECTION 200 – DEFINITIONS**

201 COATING
202 CONDENSER
203 COSMETIC PRODUCTS
204 COSMETICS MANUFACTURING FACILITY
205 EMISSION CONTROL SYSTEM (ECS)
206 EXEMPT COMPOUNDS
207 IN-PROCESS TANK
~~208 NON-PRECURSOR ORGANIC COMPOUNDS~~
~~209~~ 208 PHARMACEUTICAL MANUFACTURING FACILITY
~~210~~ 209 PHARMACEUTICAL PRODUCTS
~~211~~ 210 REACTOR
~~212~~ 211 TOTAL VOC-VAPOR PRESSURE (VOC COMPOSITE PARTIAL PRESSURE)
~~213 VOLATILE ORGANIC COMPOUND (VOC)~~

**SECTION 300 – STANDARDS**

301 REACTORS, DISTILLATION COLUMNS, CRYSTALLIZERS & CENTRIFUGES

302 IN-PROCESS TANKS
303 SEPARATION OPERATIONS
304 STERILIZERS
305 AIR DRYERS
306 TABLET COATING
307 BULK LOADING
308 STORAGE TANKS
309 OPERATING REQUIREMENTS
310 SURFACE PREPARATION AND CLEANUP SOLVENT
311 STORAGE AND DISPOSAL OF VOC
312 REQUIREMENTS FOR AIR POLLUTION CONTROL EQUIPMENT
313 EXEMPTIONS

**SECTION 400 - ADMINISTRATIVE REQUIREMENTS**
401 COMPLIANCE SCHEDULE

**SECTION 500 - MONITORING AND RECORDS**
501 RECORDKEEPING AND REPORTING
502 COMPLIANCE DETERMINATION - TEST METHODS
503 CONDENSER TEMPERATURE
504 FORMULA FOR VOC VAPOR PRESSURE

**Adopted 12/16/98**
**Revised 04/07/99**
**Revised 09/25/13**

**MARICOPA COUNTY**
**AIR POLLUTION CONTROL REGULATIONS**

**REGULATION III - CONTROL OF AIR CONTAMINANTS**

**RULE 349**
**PHARMACEUTICAL, COSMETIC AND VITAMIN MANUFACTURING OPERATIONS**

**SECTION 100 – GENERAL**

**101 PURPOSE:** To limit the emission of volatile organic compounds from pharmaceutical, cosmetic and vitamin manufacturing operations.

**102** **APPLICABILITY:** The provisions of this rule shall apply to the manufacture and/or blending of materials to make pharmaceutical, or cosmetic products or vitamins, including any process that is incidental to such operations, such as tablet coating and finishing.

**SECTION 200 – DEFINITIONS:** For the purpose of this rule, the following definitions shall apply~~:~~, in addition to those definitions found in Rule 100 (General Provisions and Definitions) of these rules. In the event of any inconsistency between any of the Maricopa County air pollution control rules, the definitions in this rule take precedence.

**201** **COATING** - A film or thin layer applied to a base material called a substrate.

**202** **CONDENSER -** A device that cools a gas stream to a temperature which removes specific organic compounds by condensation.

**203** **COSMETIC PRODUCTS** - Any material described by the Standard Industrial Classification (SIC) Code 284, as incorporated by reference in subsection 502.1 of this rule.

**204** **COSMETICS MANUFACTURING FACILITY** - Any plant producing or blending chemicals for use in cosmetic products and/or manufacturing cosmetic products.

**205** **EMISSION CONTROL SYSTEM (ECS) -** A system for reducing emissions of organic compounds, consisting of both emissions collection and processing devices which are approved in writing by the Control Officer and are designed and operated in accordance with good engineering practice.

**206** **EXEMPT COMPOUNDS -** For the purpose of this rule, the non-VOC, non-aqueous evaporating portion of a formulation; this necessarily includes all non-precursor organic compounds in addition to inorganic liquids and gases.

**207** **IN-PROCESS TANK** - Containers used for mixing, blending, heating, reacting, holding, crystallizing, evaporating, or cleaning operations in the manufacture of pharmaceuticals, cosmetics or vitamins.

~~**208** **NON-PRECURSOR ORGANIC COMPOUNDS** - Any of the organic compounds which have been designated by the EPA as having negligible photochemical reactivity. EPA designates such compounds as "exempt." A listing of the compounds is found in Rule 100 of these Air Pollution Control Rules and Regulations.~~

~~**209**~~**208** **PHARMACEUTICAL MANUFACTURING FACILITY -** Any plant producing or blending chemicals for use in pharmaceutical products and/or employing chemical processes in the

manufacture of pharmaceutical products. This definition includes any and all associated storage tanks, wastewater management units, or components such as pumps, compressors, agitators, pressure relief devices, sampling connection systems, open-ended valves or lines, valves, connectors, and instrumentation systems that are used in the manufacturing of a pharmaceutical product.

~~210~~209 **PHARMACEUTICAL PRODUCTS** - Any material described by the Standard Industrial Classification (SIC) Code 283, as incorporated by reference in subsection 502.1 of this rule, or any other fermentation, biological or natural extraction, or chemical synthesis product regulated by the Food and Drug Administration, including components (excluding excipients) of pharmaceutical formulations, or intermediates used in the production of a pharmaceutical product.

~~211~~210 **REACTOR** - A device or vessel in which one or more chemicals or reactants, other than air, are combined or decomposed in such a way that their molecular structures are altered and one or more new organic compounds are formed.

~~212~~211 **TOTAL VOC-VAPOR PRESSURE (VOC COMPOSITE PARTIAL PRESSURE)** – The sum of the partial pressures of the compounds defined as VOCs calculated according to the formula in Section 504 of this rule.

~~213~~ ~~**VOLATILE ORGANIC COMPOUND (VOC)**- Any organic compound that participates in photochemical reactions, except non-precursor organic compounds.~~

**SECTION 300 – STANDARDS**

**301** **REACTORS, DISTILLATION COLUMNS, CRYSTALLIZERS & CENTRIFUGES:** No person shall emit more than 6.8 kg (15 lbs) of VOC compounds per day from any reactor, distillation column, crystallizer or centrifuge unless such emissions are reduced by one of the following:

**301.1** Surface Condensers designed to reduce VOC emissions and having the outlet gas temperature limited as follows:

**TABLE 1**

| Vapor Pressure of VOC Compounds at 20° C (68° F) | Maximum Condenser Outlet Gas Temp. ° C (°F) |
|---|---|
| 26-52 mmHg (0.5 psi to 1.0 psi) | 25 (77) |
| 52-78 mmHg (1.0 psi to 1.5 psi) | 10 (50) |
| 78-150 mmHg (1.5 psi to 2.9 psi) | 0 (32) |

| Vapor Pressure of VOC Compounds at 20° C (68° F) | Maximum Condenser Outlet Gas Temp. ° C (°F) |
|---|---|
| 150-300 mmHg ( 2.9 psi to 5.8 psi) | -15 (5) |
| over 300 mmHg (over 5.8 psi) | -25 (-13) |

**301.2** Any other emission control system which is approved in writing by the control officer as having a control efficiency greater than or equal to surface condenser efficiency operated in accordance with subsection 301.1 of this rule.

**302** **IN-PROCESS TANKS:** No person shall use any in-process tank(s) for material containing VOC unless it is fitted with a cover or other device provided for the tank which prevents VOC evaporation. The cover or device shall be closed or in place on the tank at all times except during loading or unloading of the tank.

**303** **SEPARATION OPERATIONS:** No person shall emit more than 15 kg (33 lbs) or more of VOC compounds per day from any rotary vacuum filter or any other filter or separation device having an exposed liquid surface where the liquid contains organic compounds with a "Total VOC-Vapor Pressure" of 26 mm Hg (0.5 psia) or more at 20°C (68° F) unless such emissions are reduced by 90 percent on a mass basis.

**304** **STERILIZERS:** No person shall emit 15 kg (33 lbs) or more per day of VOCs from any chemical sterilizer unless such emissions are reduced by at least 75 percent on a mass basis.

**305** **AIR DRYERS:** No person shall emit 15 kg (33 lbs) or more of VOCs per day from any air dryer unless such emissions are reduced by at least 90 percent by weight.

**306** **TABLET COATING**

**306.1** **Limitation - VOC Emissions:** No person shall apply any coating to a pharmaceutical tablet with a VOC content in excess of 3.5 pounds of VOC per gallon of coating applied (420 g/l), excluding water, unless the emissions are controlled in accordance with the provision of subsection 306.2.

**306.2** **Emission Control System:** As an alternative to meeting the coating limit in subsection 306.1, an owner or operator may comply with this rule by operating an Emissions Control System (ECS) approved by the Control Officer. The ECS shall meet the specifications of either one of the following:

**a.** The ECS shall have a combined VOC emissions capture and control equipment efficiency of at least 81% by weight, or

**b.** The ECS shall consist of a surface condenser operated with the outlet gas temperature as specified in Table 1 of subsection 301.1 of this rule.

**307** **BULK LOADING:** A person shall not transfer volatile organic liquids having vapor pressures greater than 212 mm Hg (4.1 psia) at 20°C (68° F) from any rail car or tank truck into any storage tank with a capacity greater than 7,500 liters (2,000 gal.) unless organic compound emissions during transfer are reduced by 90 percent by weight.

**308** **STORAGE TANKS:** All storage tanks that store volatile organic liquids with a vapor pressure greater than 78 mm Hg (1.5 psia) at 20 °C (68° F) shall be equipped with pressure/vacuum vents set at a minimum + 2 mm Hg (+ 0.03 psia).

**309** **OPERATING REQUIREMENTS:** An operator shall repair all leaks from which volatile organic liquids can be observed to be dripping or seeping. The repair shall be completed the first time the equipment is off-line for a period long enough to complete the repair. The nature of the repair should be recorded in the O&M Plan.

**310** **SURFACE PREPARATION AND CLEANUP SOLVENT:**

**310.1** A person shall use closed containers for the storage or disposal of cloth or paper used for solvent surface preparation and cleanup.

**310.2** A person shall store fresh or spent solvent in closed containers.

**311** **STORAGE AND DISPOSAL OF VOC:**

**311.1** All storage of VOC-containing materials subject to evaporation, including the storage of waste solvent and waste solvent residues, shall at all times be in closed containers except when contents are added or removed.

**311.2** Containers shall be legibly labeled with their contents.

**312** **REQUIREMENTS FOR AIR POLLUTION CONTROL EQUIPMENT:**

**312.1** **Operation And Maintenance (O&M) Plan Required For ECS:**

**a.** An owner or operator shall provide and maintain (an) O&M Plan(s) for any ECS, any other emission processing equipment, and any ECS monitoring devices that are used pursuant to this Rule 349 or to an air pollution control permit.

**b.** The owner or operator shall submit to the Control Officer for approval the O&M Plans of each ECS and each ECS monitoring device that is used pursuant to this rule.

**312.2** **Providing And Maintaining ECS Monitoring Devices:** Any person incinerating, adsorbing, or otherwise processing VOC emissions pursuant to this rule shall provide, properly install and maintain in calibration, in good working order and in operation, devices described in the facility's O&M Plan that indicate temperatures, pressures, rates of flow, or other operating conditions necessary to determine if air pollution control equipment is functioning properly and is properly maintained.

**312.3** **O&M Plan Responsibility:** An owner or operator of a facility that is required to have an O&M Plan pursuant to subsection 312.1 must fully comply with all O&M Plans that the owner or operator has submitted for approval, but which have not yet been approved, unless notified otherwise by the Control Officer in writing.

**313 EXEMPTIONS**

**313.1** **Small Sources:** Sections 301, 302 303, 304, 305 and 306 of this rule shall not apply to any one facility from which the total VOC emissions from all operations subject to this rule emits less than 15 pounds (6.8 kg) per day and less than two tons (1814 kg) per year of volatile organic compounds.

**313.2** **Condenser Temperature:** If the operation of a condenser at the exit temperature specified in Table 1 of subsection 301.1 of this rule results in freezing and consequent plugging of the condenser, the allowable exit temperature may be raised to a maximum of 2°C above the freezing point of the volatile organic compound.

**SECTION 400 - ADMINISTRATIVE REQUIREMENTS**

**401 COMPLIANCE SCHEDULE**

**401.1** **Effective Date:** Except as provided in this section, the provisions of this Rule 349 become effective on July 1, 1999. The owner or operator shall notify the Control Officer in writing by March 16, 1999 if an ECS in accordance with subsection 306.2 will be used to comply with this rule. The ECS shall be in use by December 16, 1999.

**SECTION 500 - MONITORING AND RECORDS**

**501** **RECORDKEEPING AND REPORTING:** Records shall be retained for five years and shall be made available to the Control Officer upon request. Any person subject to this rule shall comply with the following requirements:

**501.1 Current List**

**a.** **Solvents:** Maintain a current list of solvents; state the VOC content of each in pounds per gallons or grams per liter. The VOC content of solvents and any liquids used as cleaning or degreasing agents shall be stated with exempt compounds such as water and non-precursors included.

**b.** **Vapor Pressure:** A facility subject to total VOC vapor-pressure limits shall have on site in one of the following forms the identified value of the total VOC vapor-pressure for each subject solvent being used: a manufacturer's technical data sheet, a manufacturer's safety data sheet (MSDS), or actual test results.

**c.** **Coatings:** Maintain a current list of coatings in use and the amount of VOCs applied.

**501.2** **Usage Records:** Maintain monthly records showing the type and amount of each VOC containing material used and coatings applied except for materials arriving on-site with less than 2% VOC by weight.

**502** **COMPLIANCE DETERMINATION AND TEST METHODS:** When more than one test method is permitted for determination, an exceedance of the limits by any of the applicable test methods constitutes a violation of this rule.

**502.1** **Compliance Determination:** The following methods shall be used to determine compliance with this rule:

**a.** Measurement of VOC emissions from a control device shall be conducted in accordance with USEPA Test Method 25 or 25A (40 CFR 60, Appendix A). USEPA Test Method 18 shall be used to determine emissions of exempt compounds if the Control Officer requires that such determinations need to be made.

**b.** VOC content of materials having more than 10% solids by volume shall be determined using the applicable EPA Reference Method 24 or 24A (40 CFR Part 60, Appendix A). The Control Officer may use manufacturers' data sheets for routine and uncontested determination of VOC content.

**c.** The VOC content of solutions, dispersions, and emulsions that have no solids or less than 5% solids shall be determined by the April 15, 1992 amended Method 31 of California's Bay Area Air Quality Management District, "Determination of Volatile Organic Compounds in Paint Strippers, Solvent Cleaners, and Low Solids Coatings."

**d.** Solid-free solutions, in which all organic content is non-exempt and will certainly evaporate under Method 24 oven conditions, may be tested using the adaptation of EPA Method 415.1 as proposed by Sorrell, et. al. of EPA's Emission Measurement Center, Office of Air Quality Planning & Standards (OAQPS): "Total Organic Carbon for Offset Lithographic Solutions."

**e.** The VOC content of materials believed to have between 5 and 10% solids shall be determined by either EPA Method 24 or by Bay Area Method 31.

**f.** Total absolute vapor-pressure of solvents containing VOC shall be determined in accordance with ASTM Test Method D 2879-83, "Vapor Pressure-Temperature Relationship and Initial Decomposition Temperature of Liquids by Isoteniscope," 1983 edition.

**g.** Temperature measurements shall be done with an instrument having an accuracy and precision of no less than ± one (1) degree Celsius.

**h.** The U.S. Government Printing Office "Standard Industrial Classification Manual, 1987" (and no future editions) is incorporated by reference and is on file at the Maricopa County ~~Environmental Services~~ Air Quality Department, 1001 N. Central ~~Avenue~~ Ave., ~~Suite 201,~~ Phoenix, Arizona 85004~~-1942~~.

**502.2** **Test Methods Adopted By Reference:** The test methods for those subparts of 40 CFR Part 60, Appendix A, adopted as of July 1, 1998, as listed below, are adopted by reference. The other test methods listed in subsection 502.2 are referred to by their specific dates of adoption and are also adopted by reference. These adoptions by reference include no future editions or amendments. Copies of test methods referenced in this section are available at the Maricopa County ~~Environmental Services~~ Air Quality Department, 1001 ~~North~~ N. Central ~~Avenue~~ Ave., ~~Suite 201~~, Phoenix, Arizona 85004~~-1942~~.

**a.** EPA Method 18 ("Measurement of Gaseous Organic Compound Emissions by Gas Chromatography") and its submethods (40 CFR 60, Appendix A).

**b.** EPA Test Method 24 ("Determination of Volatile Matter Content, Water Content, Density, Volume Solids, and Weight Solids of Surface Coatings") and its submethods (40 CFR 60, Appendix A).

**c.** EPA Method 25 ("Determination of Total Gaseous Nonmethane Organic Emissions as Carbon") and its submethods (40 CFR 60, Appendix A).

**d.** California's Bay Area Air Quality Management District (BAAQMD) Method 31 (April 15, 1992), "Determination of Volatile Organic Compounds in Paint Strippers, Solvent Cleaners, and Low Solids Coatings".

**e.** EPA Method 415.1 as proposed by Sorrell, et. al. of EPA's Emission Measurement Center, Office of Air Quality Planning & Standards (OAQPS): "Total Organic Carbon for Offset Lithographic Solutions," 1992.

**f.** ASTM Test Method D 2879-83, "Vapor Pressure-Temperature Relationship and Initial Decomposition Temperature of Liquids by Isoteniscope," 1983 edition.

**503** **CONDENSER TEMPERATURE:** In cases where the condenser outlet gas temperature is not readily measurable due to negligible gas flow rate, the temperature of the condenser coolant may be used in lieu of condenser outlet gas temperature. In such cases, an exceedance of coolant temperature is an exceedance of the outlet gas temperature limits in Table 1, subsection 301.1 of this rule.

**504** **FORMULA FOR TOTAL VOC VAPOR PRESSURE:** The sum of the partial pressures of the compounds defined as VOCs may be calculated by using the following formula:

$$Pp_c = \frac{\sum_{i=1}^{n} \left(W_j\right)(VP) \Big/ MW_i}{\frac{W_w}{18} + \sum_{j=1}^{m} \frac{W_{ej}}{MW_{ej}} + \sum_{i=1}^{n} \frac{W_i}{MW_i}}$$

$W_i$ = Weight of the "i"th VOC compound in grams

$W_w$ = Weight of water in grams

$W_{ej}$ = Weight of the "j"th non-precursor compound in grams

$MW_j$ = Molecular weight of the "i"th VOC compound in grams per gram mole, e.g., one gram-mole of isopropyl alcohol weighs 60 grams

| | | |
|---|---|---|
| $MW_{ej}$ | = | Molecular weight of the "j"th non-precursor compound, e.g., 1 gram-mole of acetone weighs 58 grams |
| $Pp_c$ | = | VOC composite partial pressure at 20°C in mm mercury (Hg) |
| $VP$ | = | Vapor pressure of the "i"th VOC compound at 20°C in mm Hg |
| 18 | = | Weight of one gram-mole of water |

**REGULATION III - CONTROL OF AIR CONTAMINANTS**

**RULE 352**

**GASOLINE DELIVERY VESSEL TESTING AND USE**

**INDEX**


**SECTION 100 – GENERAL**

101 PURPOSE

102 APPLICABILITY

**SECTION 200 – DEFINITIONS**

201 2-POINT SYSTEM

202 EXCESS GASOLINE DRAINAGE

203 GASOLINE

204 GASOLINE DELIVERY VESSEL

205 GASOLINE VAPORS

206 LEAK FREE

207 MARICOPA COUNTY (MC) PRESSURE TEST

~~208 NON-PRECURSOR ORGANIC COMPOUND~~

~~209~~ 208 PURGING

~~210~~ 209 STAGE 1 VAPOR RECOVERY SYSTEM (VR SYSTEM)

~~211~~ 210 SWITCH LOADING

~~212~~ 211 VAPOR TIGHT

~~213 VOLATILE ORGANIC COMPOUND (VOC)~~

**SECTION 300 - STANDARDS**

301 PREVENT LEAKS AND SPILLS

302 GASOLINE DELIVERY VESSEL LEAK TEST REQUIRED

303 DISPLAY A VALID DECAL

304 PURGING PROHIBITED

305 EXEMPTIONS

**SECTION 400 - ADMINISTRATIVE REQUIREMENTS**

401 TESTING

402 TIME FRAME FOR INSTALLATION OF CONTROL DEVICE

**SECTION 500 - RECORDS AND MONITORING**

501 RECORDKEEPING AND REPORTING REQUIREMENTS

502 MONITORING FOR LEAKS

503 COMPLIANCE DETERMINATION

504 TEST MZETHODS

**Revised 07/13/88**

**Revised 11/16/92**

**Revised 05/05/99**

**Revised 09/25/13**

**MARICOPA COUNTY**

**AIR POLLUTION CONTROL REGULATIONS**

**REGULATION III - CONTROL OF AIR CONTAMINANTS**

**RULE 352**

**GASOLINE DELIVERY VESSEL TESTING AND USE**

**SECTION 100 – GENERAL**

**101** **PURPOSE:** To limit emissions of volatile organic compounds (VOC) from gasoline delivery vessels.

**102** **APPLICABILITY:** This rule applies to any gasoline delivery vessel which is used to receive or deliver gasoline within Maricopa County, and to all persons who own, operate, maintain, repair, or test such a vessel.

**SECTION 200 – DEFINITIONS:** For the purpose of this rule, the following definitions shall apply~~:~~, in addition to those definitions found in Rule 100 (General Provisions and Definitions) of these rules. In the event of any inconsistency between any of the Maricopa County air pollution control rules, the definitions in this rule take precedence.

**201** **2-POINT SYSTEM -** A fill pipe and a vapor-recovery pipe pair which are in close proximity to one another and are connected directly to and emerge directly above the tank they serve.

**202** **EXCESS GASOLINE DRAINAGE -** More than 10 milliliters (2 teaspoonsful) of liquid gasoline lost in the process of connecting or disconnecting a gasoline delivery hose, or any quantity of gasoline lost during those processes that wets any area(s) on the ground having an aggregate area greater than 113 square inches, or the perimeter of which would encompass a circle of 12 inches (30.5 cm) diameter.

**203** **GASOLINE -** Any petroleum distillate or blend of petroleum distillate with other combustible liquid(s), such as alcohol, that is used as a fuel for internal combustion engines and has a Reid vapor pressure between 4.0 and 14.7 psi (200 - 760 mm Hg.) For the purposes of this rule, liquefied petroleum gas (LPG) is excluded.

**204** **GASOLINE DELIVERY VESSEL -** Any vehicular-mounted container such as a tanker truck, tank trailer, cargo tank or any other wheel-mounted container used to transport gasoline. This includes any hoses the vessel carries through which deliveries must be made.

**205** **GASOLINE VAPORS -** Vapors, originating from liquid gasoline, that are usually found in mixture with air. Included are any droplets of liquid gasoline or of gasoline-vapor condensate that are entrained by the vapor.

**206** **LEAK FREE -** Having no single gasoline leak of more than 3 drops per minute from a gasoline delivery vessel, including fill hose(s) and vapor hose(s), but not including the disconnecting or connecting of either a gasoline hose from a gasoline fill line or a vapor hose from a vapor line.

**207** **MARICOPA COUNTY (MC) PRESSURE TEST** - The complete pressure, vacuum, and vapor-valve testing of a gasoline delivery vessel that is performed according to Maricopa County specifications as described in subsection 302.2 of this rule.

~~**208** **NON-PRECURSOR ORGANIC COMPOUND** - Any of the organic compounds which have been designated by the EPA as having negligible photochemical reactivity. EPA designates such compounds as "exempt". A listing of the compounds is found in Rule 100 of these Air Pollution Control Rules and Regulations.~~

~~**209**~~**208** **PURGING -** Removing, cleaning, or scouring out gasoline vapors from all or a portion of a delivery vessel by active or passive means and emitting the vapors into the atmosphere.

~~**210**~~**209** **STAGE 1 VAPOR RECOVERY SYSTEM (VR SYSTEM) -** Any piping, hoses, equipment, and/or devices which are used to collect, store, or process gasoline vapors displaced by the delivery of gasoline and also by the onloading of gasoline into a vapor laden delivery vessel.

~~211~~210 **SWITCH LOADING -** Loading diesel fuel into a delivery vessel whose previous load was gasoline; or loading any liquid not subject to this rule into a delivery vessel whose previous load was gasoline.

~~212~~211 **VAPOR TIGHT -** A condition in which a suitable detector at the site of (potential) leakage of vapor shows less than 10,000 ppmv when calibrated with methane; or the detector shows less than 1/5 LEL (lower explosive limit) subsequent to calibration with a gas specified by the manufacturer and is used according to the manufacturer's instructions.

~~213~~ ~~**VOLATILE ORGANIC COMPOUND (VOC)** - Any organic compound that participates in photochemical reactions, except non-precursor organic compounds.~~

**SECTION 300 – STANDARDS**

**301 PREVENT LEAKS AND SPILLS:**

**301.1 Vessel Integrity:** In Maricopa County, no person shall store or transport gasoline in or otherwise use or operate any gasoline delivery vessel unless such vessel is designed and maintained to be vapor tight and leak free.

**301.2 Onloading Measures:**

**a.** At any bulk loading rack, connect a vapor return hose before connecting any loading hose.

**b.** At a bulk plant, connect an additional vapor hose before connecting any additional loading hose, unless an assisted vapor return system is serving the vapor hose that is already connected.

**c.** Use a bucket or other effective capture device to catch any liquid dripping during the connection or disconnection of both the loading hose from the truck and the vapor hose from the loading dock's vapor receiving pipe.

**(1)** Either dispose of the captured liquid in a tank designated for that purpose, or use a receptacle or a material designed to absorb the liquid.

**(2)** Any gasoline that escapes or spills must be collected and contained.

**301.3 Prevent Spills And Excess Drainage:** A driver/operator of a gasoline delivery vessel shall:

**a.** Thoroughly drain a fill hose and a vapor recovery hose into the dispensing tank before disconnecting it from the tank's fittings.

**b.** Connect and disconnect fill hoses and vapor recovery hoses in such a way as to prevent excess gasoline drainage (more than 2 teaspoonsful) from escaping from the hose in one connect/disconnect cycle.

**c.** Spills and any gasoline that is deposited in or on an area other than within the dispensing tank shall be collected and contained. This can include, but is not limited to, the correct use of buckets and/or absorbent material designed for the purpose, and the correct disposal of the collected gasoline.

**301.4 Vapor Hose Use Required At Retail Gas Stations:**

**a.** A driver/operator shall not deliver gasoline to a dispensing tank at a retail gas station unless a vapor hose is first connected from the vessel to a vapor return-line serving the tank.

**b.** No delivery shall be made to a retail tank if:

**(1)** it is not served by a vapor return, or

**(2)** if it has a locked cap that cannot be removed, or

**(3)** if broken fittings prevent correct connection of the vapor hose.

**301.5 Prevent Vapor Escape During Deliveries:** For gasoline dispensing tanks that are equipped with a Stage 1 vapor recovery system (VR System):

**a.** During delivery, the vessel operator shall not remove the lid of a fill tube unless every other fill tube either has a lid fastened in place or a delivery hose connecting it to the delivery vessel.

**b.** Connect a vapor recovery hose before connecting any gasoline delivery hose.

**c.** Disconnect a delivery hose from a tank before disconnecting the vapor recovery hose.

**d.** **Restriction On Multiple Connection:** A delivery vessel shall not simultaneously have more than one gasoline delivery hose connected, unless each delivery hose is

connected to a dispensing tank's 2-point system that already has a vapor hose connecting it to the vessel.

**301.6** **Vapor Recovery Systems Having Remote Vapor Return Lines:** If a delivery vessel's vapor hose is connected to a vapor return line that is not part of a 2-point system, then there shall not be more than one gasoline delivery hose connected to the vessel, and no other hoses connected to a fill tube; viz., no more than one compartment of the delivery vessel shall be emptied at a time.

**302** **GASOLINE DELIVERY VESSEL LEAK TEST REQUIRED:** A gasoline delivery vessel shall first pass the MC Pressure Test before delivering or onloading gasoline within Maricopa County, and to continue, must pass the MC Pressure Test each year thereafter. This does not apply to loads that originate solely in another state, nor to loads originating in Maricopa County that are not delivered in Maricopa County.

**302.1** **Testing:** The MC Pressure Test shall be performed according to subsection 302.2.

**a.** Scheduling and notification of an initial test or annual retest shall be done in accordance with subsection 401.1 and subsection 401.3.

**b.** A tester shall record the results of a Pressure Test according to the format in subsection 501.2.

**c.** A valid ~~MCESD~~Maricopa County Air Quality Department decal shall be affixed to the vessel consequent to passing the MC Pressure Test before the vessel may deliver or onload gasoline.

**d.** An owner or operator of a delivery vessel shall comply with subsection 401.2 registration requirements to obtain a valid ~~MCESD~~Maricopa County Air Quality Department decal after a successful MC Pressure Test.

**302.2** **MC Pressure Test:** A vessel that is being MC Pressure Tested shall pass all 3 of the following pressure subtests, in the following order, and use the same vapor hose during the test as will be used for deliveries by that same unit:

**a.** **Positive Pressure Subtest:** Lose no more than 1.0 inch (25.4 mm) of water column in 5.0 minutes, when pressurized to a gauge pressure of 18 inches (45.7 cm) of water in 2 consecutive runs according to procedures in subsections 5.1.1 through 5.2.7 of EPA Method 27, as incorporated by reference in Section 504 of this rule; and

**b.** **Vapor Valve Subtest:** Lose no more than 5.0 inches (127 mm) of water column in 5.0 minutes, measured in the vapor system after the vessel compartments are first collectively pressurized to a gauge pressure of 18 inches (45.7 cm) of water and then the vapor valves are closed, per subsection 503.2 of this Rule 352; and

**c.** **Partial Vacuum Subtest:** Gain no more than 1.0 inch (25.4 mm) of water column in 5.0 minutes, when initially evacuated to a gauge pressure of 6 inches (15.2 cm) of water, in 2 consecutive runs, per subsections 5.3.1 through 5.3.7 of EPA Method 27, as incorporated by reference in Section 504 of this rule.

**d.** **Pressure Instability:** A subtest is invalidated if during either of the pressure subtests, more than 1/2 inch water pressure is gained, or if during the vacuum test the vacuum is increased by more than minus ½ inch.

**302.3** A vessel shall be repaired, retested, and pass all 3 subtests in the same testing period within 15 days of testing if it does not pass all 3 subtests of subsection 302.2 of this rule.

**303** **DISPLAY A VALID DECAL:** Each gasoline delivery vessel shall clearly display a valid ~~MCESD~~Maricopa County Air Quality Department ~~air quality~~ decal that is permanently mounted near the front on the right (passenger) side of the vessel.

**304** **PURGING PROHIBITED:**

**304.1** No person shall purge gasoline vapors into the atmosphere from a delivery vessel unless the following conditions are met:

**a.** VOC emissions shall be reduced at least 90% by weight, including capture and processing, by a control device having a Maricopa County Air Pollution Permit; and

**b.** Such purging shall be done only after all delivery valves are opened and any liquid gasoline outflow is captured in a container having an attached lid which is kept closed when not receiving or pouring gasoline.

**304.2** An operator of a delivery vessel shall not purge gasoline vapors from such vessel as a passive result of switch loading, except for vessels exempted by subsection 305.1.

**305** **EXEMPTIONS:**

**305.1** A delivery vessel is exempt from pressure test requirements of Section 302 if all of the following conditions are met:

**a.** The vessel was placed in operation before July 13, 1988; **and**

**b.** The vessel transported gasoline within Maricopa County before January 1, 1998; **and**

**c.** The vessel never loads at a gasoline terminal; **and**

**d.** The vessel serves only farm tanks and/or those non-resale dispensing operations having a yearly throughput not exceeding 120,000 gallons of gasoline, verified by monthly records pursuant to subsection 501.1a; **and**

**e.** The vessel either has a sticker affixed to it that indicates to a bulk plant operator that the vessel may be loaded in Maricopa County, or has an affidavit signed by an owner or officer of the operating company filed with ~~MCESD~~ the Maricopa County Air Quality Department, with a complete copy of the signed affidavit available in the vehicle for inspection by a bulk plant operator or the Control Officer.

**305.2** An operator of a delivery vessel exempted by subsection 305.1 is allowed to incidentally purge gasoline vapors from such vessel as a passive result of loading, or briefly when lids/ports must be open for inspection.

**305.3 Opening Hatches On Non-Exempt Vessels:**

**a. Required By Rule:** Owners/operators, their contractors, and authorized government agents may open vapor containment equipment on a nonexempt gasoline delivery vessel while performing operations required by governmental agencies, but shall be restricted as follows, unless approved in advance by the Control Officer:

**(1)** Wait at least 3 minutes after onloading is complete and after a delivery vessel has stopped before opening its hatch or other vapor seal.

**(2)** Reclose hatch or other sealing device within 3 minutes of completing the required procedures.

**(3)** Limit windspeed at opened hatch or other opened sealing device to not more than 3 mph (1.34 m/sec), using a barrier if necessary.

**b. Defueling:** Hatches of a delivery vessel may be open for monitoring to prevent overflow during the period that the vessel is receiving gasoline from a tank or other source, if so required by a local fire code or other ordinance.

**c.** **Connecting Coaxial Fittings:** Requirements for first connecting a vapor hose before a gasoline delivery hose do not apply to coaxial VR connection fittings.

## SECTION 400 - ADMINISTRATIVE REQUIREMENTS

**401** **TESTING:** Testing required by subsections 302.2a, b, and c shall be conducted by the owner or operator of the delivery vessel, or by a consultant, at the expense of the owner or operator. The Control Officer may at any time observe the tests. An owner or operator shall comply with the following provisions:

**401.1** **Notification Of Required Testing:** The owner, operator, or tester shall notify the Control Officer as follows for each vessel being tested to meet requirements of Section 302 or subsection 304.1 of this rule:

**a.** Contact the Control Officer during normal business hours of the Department at least 4 hours prior to testing; and

**b.** Give an estimated start time that is no more than 1 hour prior to actual start time;

**c.** Except for weekend testing, the Control Officer shall be notified no more than 24 hours in advance of testing;

**d.** For weekend testing, the notification shall be given, along with the date of testing, prior to 2 PM on Friday (or Thursday, if Friday is a County holiday);

**e.** Give the location of the testing;

**f.** Any testing that is performed in the 8 hour period between 9 PM and 5 AM is not valid for purposes of satisfying Section 302 requirements, except if the Control Officer gives specific, advance permission for a particular occasion.

**401.2** **Registration:** To obtain a decal, do the following for each vessel that passes the required annual test:

**a.** Assemble in 1 packet the following 3 items:

**(1)** A properly completed "APPLICATION FOR AIR POLLUTION VAPOR RECOVERY CERTIFICATION" (also called "The Application"),

**(2)** A properly completed copy of the ~~MCESD~~ Maricopa County Air Quality "Tank Truck Leak Certification Check List", and

**(3)** The annual fee remittance. (The fee amount appears in Rule 280.)

**b.** Send or convey this single packet to the Maricopa County Air Quality ~~Division~~Department at the address on the top of the application.

**c.** Upon receipt of these 3 properly completed items, a decal will be issued by the Control Officer.

**401.3 Expiration:**

**a.** A decal that is issued to a vessel that passed its test in the 4-month period between March 1 through June 30 shall expire at 11:59 PM on June 30 of the following year.

**b.** A decal that is issued to a vessel that passed its test in the period after June 30 of the previous year and before March 1 of the current year shall expire at 11:59 PM on June 30 of the year. For example, if the test is passed between July 1, 2000, through February 28, 2001, the decal expires on June 30, 2001.

**401.4 Loss:**

**a.** An owner or operator shall notify the Control Officer immediately if a valid decal/sticker is lost, defaced, or destroyed.

**b.** The Control Officer may require a demonstration of need for replacement.

**c.** If Rule 280 so provides, the Control Officer may charge a fee for reissue or substitute issue of a lost, defaced, or destroyed decal/sticker, if the Control Officer determines that the Department is not at fault.

**402 TIME FRAME FOR INSTALLATION OF CONTROL DEVICE:** An owner or operator of a vessel testing operation who chooses to comply with the Section 304 purging provisions through the use of a control device shall submit by August 1, 1999, an application for a Maricopa County Air Pollution Control Permit and an Operation and Maintenance Plan for the control device. The device shall be fully functioning by May 1, 2000.

## SECTION 500 - RECORDS AND MONITORING

**501 RECORDKEEPING AND REPORTING REQUIREMENTS:**

**501.1** The owner or operator of a gasoline delivery vessel subject to this rule shall maintain records of all certification, testing, and repairs.

**a.** Such records must be maintained in a legible, readily available condition for at least 5 years after the date the testing and repair is completed.

**b.** Upon verbal or written request by the Control Officer, or a designee of the Control Officer, records shall be provided within a reasonable time. If the Control Officer is at the site where requested records are kept, records shall be provided without delay.

**501.2** The records of the certification testing required by Section 302 must be recorded in both of the following documents: the "Application for Air Pollution Vapor Recovery Certification" and the "Tank Truck Leak Certification Check List". Pressure and vacuum shall be recorded to no less than the nearest quarter inch or half-centimeter of water column. The minimum requirements for each of these 2 documents follow:

**a.** For the "Application for Air Pollution Vapor Recovery Certification":

(**1**) Owner's name and address.

**(2)** Tank ID number, the location of the test, the time of the test, and the date of the test.

**(3)** For the pressure subtest, 2 readings: the change in pressure (in inches H2O) for Run 1 and the change in pressure for Run 2.

**(4)** For the vapor-valve subtest (subsection 302.2b), 1 reading: the total change in pressure during the test.

**(5)** For the vacuum test, 2 readings: the total change in vacuum during Run 1 and the same for Run 2.

**b.** The "Tank Truck Leak Certification Check List" (or its successor document) shall contain at least the following information: **(1)** The same information required in subsections a (1) and a(2) of this subsection 501.2; **and**

**(2)** The time the subtest began, the initial pressure of the subtest, the finish time, the final pressure of the subtest, and the pressure change between the start and end of the subtest; the vessel's unit number, manufacturer's serial number, the tank capacity, whether the tank was purged of gasoline vapors, and the date of the next leakage test if the set of 3 subtests are not all passed.

**(3)** If the initial pressure test was not passed, one set of readings in the row "Initial Test", also giving the elapsed time if the pressure reached zero before 5 minutes.

For example, the row marked “Initial Test” will normally contain the results of the initial failed subtest if any repairs were made subsequent to any pressurization or evacuation of the tank.

**502** **MONITORING FOR LEAKS:** The Control Officer may at any time monitor a delivery vessel, including the vapor collection system, for vapor and liquid leaks to ascertain if it is vapor tight and leak free. Leakage of vapor exceeding 1/5 of the lower explosive limit, or 10,000 ppm as methane, when performed according to subsection 504.4, shall be an exceedance of the vapor-tight standard of subsection 301.1.

**503** **COMPLIANCE DETERMINATION:** When more than one test method is permitted for a determination, an exceedance of the limits established in the rule determined by any of the applicable test methods constitutes a violation of this rule.

**503.1** **Pressure And Vacuum Tests:** The subtests to determine compliance with subsection 302.2a and subsection 302.2c of this rule shall be performed according to EPA Method 27, except that the definition of gasoline shall be according to this Rule 352.

**503.2** **Test Of Internal Vapor Valves:** The test to determine compliance with subsection 302.2b shall be performed immediately after successfully passing the pressure subtest (pursuant to subsection 302.2a), without performing any intervening maintenance or repair on the vapor valves.

**503.3** Confirmation of a vapor leak detected on a vessel during onloading shall be determined by properly deploying a pressure tap adapter that conforms to Method 27 provisions, and demonstrating the leak according to subsection 504.4, while the pressure is less than 20 inches of water column.

**503.4** Pursuant to Section 203, Reid vapor pressure shall be determined using American Society for Testing and Materials (ASTM) Method D 323-90.

**504** **TEST METHODS:** The EPA test method as it exists in the Code of Federal Regulations (CFR) (July 1, 1998), as listed below, is adopted by reference. The other test methods listed here are also adopted by reference, each having paired with it a specific date that identifies the particular version/revision of the method that is adopted by reference. These adoptions by reference include no future editions or amendments. Copies of test methods referenced in this Section 504 are available at the Maricopa County ~~Environmental Services~~ Air Quality Department, 1001 N. Central ~~Avenue~~ Ave., ~~Suite 201~~, Phoenix, Arizona 85004~~-1942~~.

**504.1** EPA Method 27 (“Determination Of Vapor Tightness Of Gasoline Delivery Tank Using Pressure-Vacuum Test”) in 40 CFR 60, Appendix A.

**504.2** American Society for Testing and Materials (ASTM) Method D 323-90, 1990 (Reid vapor pressure).

**504.3 Test Of Internal Vapor Valves:**

**a.** Pressurize the delivery vessel to 18 inches (45.7 cm) of water column, using the first 2 procedures of the "Pressure Test" section of EPA Method 27.

**b.** Close all the vessel's internal valves, including the internal vapor valves, thereby isolating the vapor system (vapor return line plus vapor manifold) from the compartments.

**c.** Relieve the pressure in the vapor return line (to atmospheric pressure).

**d.** Seal the vapor return line and after 5.0 minutes record the pressure present in the vapor system.

**504.4 Delivery Vessel Vapor Tightness Test:** A vapor tight condition will be determined for vessels by the following method:

**a. Calibration:** Within 4 hours prior to monitoring, the combustible gas detector or organic vapor analyzer shall be suitably calibrated for a 20 percent LEL response, or to 10,000 ppm with methane.

**b. Probe Distance:** The probe inlet shall be 1 inch (2.5 cm) or less from the potential leak source when searching for leaks. The probe inlet shall be 1inch (2.5 cm) from the leak source when the highest detector reading is being determined for a discovered leak. When the probe is obstructed from moving within 1 inch (2.5 cm) of an actual or potential leak source, the closest practicable probe distance shall be used.

**c. Probe Movement:** The probe shall be moved slowly, not faster than 1.6 inches per second (4 centimeters per second). If there is any meter deflection at a potential or actual leak source, the probe shall be positioned to locate the point of highest meter response.

**d. Probe Position:** The probe inlet shall be positioned in the path of the vapor flow from a leak such that the central axis of the probe-tube inlet shall be positioned coaxially with the path of the most concentrated vapors.

**e. Data Recording:** The highest detector reading and location for each incidence of detected leakage shall be recorded, along with the date and time. If no gasoline vapor is detected, that fact shall be entered into the record.

## REGULATION III – CONTROL OF AIR CONTAMINANTS

## RULE 353
## GASOLINE IN STATIONARY DISPENSING TANKS

### INDEX


**SECTION 100 – GENERAL**

101 PURPOSE
102 APPLICABILITY

**SECTION 200 – DEFINITIONS**

201 CARB-CERTIFIED
202 DISPENSING TANK
203 EXCESS GASOLINE DRAINAGE
204 GASOLINE
205 GASOLINE DELIVERY VESSEL
206 GASOLINE DISPENSING OPERATION
207 GASOLINE VAPORS
208 INSTALLER
209 LEAK-FREE
~~210 NON-PRECURSOR ORGANIC COMPOUND~~
~~211~~ 210 OFFSET FILL LINE
~~212~~ 211 POPPETTED DRY BREAK
~~213~~ 212 SIDE FILL PIPE
~~214~~ 213 STAGE 1 VAPOR RECOVERY
~~215~~ 214 TANK CAPACITY
~~216~~ 215 TOP FILL OR VERTICAL FILL PIPE
~~217~~ 216 VAPOR LOSS CONTROL DEVICE
~~218~~ 217 VAPOR-TIGHT

**SECTION 300 – STANDARDS – VAPOR LOSS CONTROL MEASURES REQUIRED**

301 BASIC TANK INTEGRITY
302 FILL PIPE REQUIREMENTS
303 VAPOR RECOVERY SYSTEM
304 EQUIPMENT MAINTENANCE AND USE REQUIRED
305 EXEMPTIONS

**SECTION 400 – ADMINISTRATIVE REQUIREMENTS**
401 TANKS THAT LOST THEIR EXEMPTION
402 BURDEN OF PROOF
403 CARB DECERTIFICATION
404 OTHER AGENCIES' REQUIREMENTS

**SECTION 500 – MONITORING AND RECORDS**
501 COMPLIANCE INSPECTIONS
502 RECORDKEEPING
503 COMPLIANCE DETERMINATION
504 TEST METHODS

**Revised 07/13/88**
**Revised 04/06/92**
**Revised 06/16/99**
**Revised 09/25/13**

**MARICOPA COUNTY**
**AIR POLLUTION CONTROL REGULATIONS**

**REGULATION III – CONTROL OF AIR CONTAMINANTS**

**RULE 353**
**GASOLINE IN STATIONARY DISPENSING TANKS**

**SECTION 100 – GENERAL**

**101** **PURPOSE:** To limit VOC (volatile organic compound) emissions from gasoline stored in stationary dispensing tanks, and from gasoline delivered into such tanks.

**102** **APPLICABILITY:** This rule is applicable to gasoline stored in or transferred into any stationary dispensing tank with a capacity of more than 250 gallons (946 l). This includes gas stations and other gasoline-dispensing facilities, including those located at airports.

**SECTION 200 – DEFINITIONS:** For the purpose of this rule, the following definitions shall apply~~:~~, in addition to those definitions found in Rule 100 (General Provisions and Definitions) of these rules. In the event of any inconsistency between any of the Maricopa County air pollution control rules, the definitions in this rule take precedence.

**201** **CARB-CERTIFIED –** A vapor control system, subsystem, or component that has been specifically approved by system configuration and manufacturer's name and model number in an executive order of the California Air Resources Board (CARB), pursuant to Section 41954 of the California Health and Safety Code. Such orders are included in CARB's publication, "Gasoline Facilities - Phase I & II", which is available as set forth in subsection 503.4.

**202** **DISPENSING TANK –** Any stationary tank which dispenses gasoline into a motorized vehicle's fuel tank that directly fuels its engine(s). This includes aircraft.

**203** **EXCESS GASOLINE DRAINAGE –** More than 10 milliliters (2 teaspoonsful) of liquid gasoline lost from the end of a fill hose or vapor hose in the process of connecting or disconnecting the hose; or any quantity of gasoline escaping out the end of such a hose that wets any area(s) on the ground having an aggregate area greater than 113 square inches, or the perimeter of which would encompass a circle of 12 inches (30.5 cm) diameter. This does not include drainage into a filltube's spill containment receptacle.

**204** **GASOLINE –** Any petroleum distillate or blend of petroleum distillate with other combustible liquid(s), such as alcohol, that is used as a fuel for internal combustion engines and has a vapor pressure between 4.0 and 14.7 psi (200 – 760 mm Hg.), as determined by the applicable method pursuant to subsections 503.2 and 504.2. For the purposes of this rule, liquefied petroleum gas (LPG) is excluded.

**205** **GASOLINE DELIVERY VESSEL –** Any vehicular-mounted container such as a tanker truck, tank trailer, cargo tank or any other wheel-mounted container used to transport gasoline. This includes any hosing the vessel carries through which deliveries must be made.

**206** **GASOLINE DISPENSING OPERATION –** All gasoline dispensing tanks and associated equipment located on one or more contiguous or adjacent properties under the control of the same person (or persons under common control).

**207** **GASOLINE VAPORS –** Vapors, originating from liquid gasoline, that are usually found in mixture with air. Included are any droplets of liquid gasoline or of gasoline vapor condensate that are entrained by the vapor.

**208** **INSTALLER –** The person, as defined in Rule 100, that installs VOC control equipment at a dispensing facility.

**209** **LEAK-FREE –** A condition in which there is no liquid gasoline escape or seepage of more than 3 drops per minute from gasoline storage, handling, and ancillary equipment, including, but not limited to, seepage and escapes from above ground fittings.

~~**210** **NON-PRECURSOR ORGANIC COMPOUND** – Any of the organic compounds which have been designated by the EPA as having negligible photochemical reactivity. EPA designates such compounds as "exempt". A listing of the compounds is found in Rule 100 of these Air Pollution Control Rules and Regulations.~~

~~211~~**210** **OFFSET FILL LINE –** Any dispensing tank's gasoline fill line (piping and fittings) which contains one or more bends.

~~212~~**211** **POPPETTED DRY BREAK –** A Stage 1 vapor recovery device that opens only by connection to a mating device to ensure that no gasoline vapors escape from the dispensing tank before the vapor return line is connected.

~~213~~**212** **SIDE FILL PIPE –** A fill pipe that enters a dispensing tank through the tank's side.

~~214~~**213** **STAGE 1 VAPOR RECOVERY –** At a gasoline dispensing facility, the use of installed vapor recovery equipment designed to reduce by at least 90% the VOC vapor that would otherwise be displaced into the atmosphere from a dispensing tank when gasoline is delivered into the tank by a delivery vessel. This reduction may be done either by capturing the displaced vapors within the delivery vessel, and/or by processing the vapors on site with an emission processing device (such as a VOC oxidizer).

~~215~~**214** **TANK CAPACITY –** The maximum volume of liquid gasoline a particular tank is allowed to store while still complying with all applicable rules, including local, state, and Federal rules.

~~216~~**215** **TOP FILL or VERTICAL FILL PIPE –** A fill pipe that enters a dispensing tank through its top.

~~217~~**216** **VAPOR LOSS CONTROL DEVICE –** Any piping, hoses, equipment, or devices which are used to collect, store and/or process VOC vapors at a service station or other gasoline dispensing operation.

~~218~~**217** **VAPOR-TIGHT –** A condition in which an organic vapor analyzer (OVA) or a combustible gas detector (CGD) at a potential VOC leak source shows either less than 10,000 ppm when calibrated

with methane, or less than 1/5 of the lower explosive limit, when prepared according to the manufacturer and used according to subsection 504.3 of this rule.

**SECTION 300 – STANDARDS – VAPOR LOSS CONTROL MEASURES REQUIRED:** No person shall transfer or permit the transfer of gasoline from any delivery vessel into any stationary dispensing tank located above or below ground with a capacity of more than 250 gallons (946 l) unless the following conditions are met:

**301** **BASIC TANK INTEGRITY:** No vapor or liquid escapes are allowed through a dispensing tank's outer surfaces, nor from any of the joints where the tank is connected to pipe(s), wires, or other system.

**301.1** VOC Emission Standard:

**a.** Gasoline delivery operations shall be vapor-tight, as defined in Section 218, except for tanks exempted by Section 305 from Stage 1 vapor recovery requirements.

**b.** Tanks and their fittings shall be vapor-tight except for the outlet of a pressure/vacuum relief valve on a dispensing tank's vent pipe. Specifically, this means that at a probe tip distance of 1 inch (2.5 cm) from a surface, no vapor escape shall exceed 1/5 of the lower explosive limit. This applies to tanks containing gasoline regardless of whether they are currently being filled, and to caps and other tank fittings.

**301.2** Leakage Limits – Liquid Leaks and Spills:

**a.** Gasoline storage and receiving operations shall be leak-free. Specifically, no liquid gasoline escape of more than 3 drops per minute is allowed. This includes leaks through the walls of piping, fittings, fill hose(s), and vapor hose(s).

**b.** There shall be no excess gasoline drainage from the end of a fill hose or a vapor hose. Specifically, not more than 2 teaspoonsful of gasoline shall be lost in the course of a connect or disconnect process.

**301.3** Spill Containment Equipment: The entire spill containment system including gaskets shall be kept vapor-tight.

**a.** The Spill Containment Receptacle:

**(1)** The outer surface of the spill containment receptacle shall have no holes or cracks and shall allow no vapors to pass from the dispensing tank through it to the atmosphere.

**(2)** Spill containment receptacles shall be kept clean and free of foreign material at all times.

**(3)** Spill containment receptacles shall be inspected at least weekly. Records of inspection and cleaning shall be kept according to subsection 502.2.

**b.** If the spill containment is equipped with a passageway to allow material trapped by the containment system to flow into the interior of the dispensing tank:

**(1)** The passageway shall be kept vapor-tight at all times, except during the short period when a person opens the passageway to immediately drain material trapped by the containment system into the tank.

**(2)** The bottom of the receptacle shall be designed and kept such that no puddles of gasoline are left after draining through the passageway has ceased.

**c.** The dispensing tank owner/operator is responsible for assuring that before a delivery vessel leaves the premises after a delivery:

**(1)** Any gasoline in a dispensing tank's spill containment receptacle has been removed.

**(2)** Any gasoline that a person has taken out of a spill receptacle, as a free liquid or as absorbed into/onto other material removed from the receptacle, shall be contained in such a way that VOC emission is prevented; disposal in conformance with applicable hazardous waste rules is sufficient to meet this requirement.

**(3)** Any plunger/stopper assembly is unimpeded and sealing correctly.

**d.** Criteria Of Violation/Exceedance for Spill-Containment Receptacles: A reading on a CGD or OVA exceeding 1/5 LEL (10,000 ppm as methane) is an exceedance. The procedure for performing a determination is set forth in subsection 504.3.

## 302 FILL PIPE REQUIREMENTS:

**302.1** Each fill-line into a stationary dispensing tank shall be equipped with a permanent submerged fill pipe that has a discharge opening which is completely submerged when the liquid level is 6 inches above the tank bottom.

**a.** Threads, gaskets, and mating surfaces of the fill pipe assembly shall be designed and maintained tight. There shall be no liquid or vapor leakage at the joints of the assembly.

**b.** An owner/operator is responsible to assure that external fittings of a fill pipe assembly shall be inspected weekly to assure that cap, gasket, and piping are intact and are not loose.

**(1)** A record of the inspection shall be made according to subsection 502.2.

**(2)** An owner/operator shall act to prevent driver/deliverers from connecting the delivery hose coupling to a fill pipe coupling with so much twisting force that the fill pipe assembly is loosened. One method of complying is to have a CARB-certified swivel coupling as part of the fill pipe assembly (reference subsection 503.4 for CARB).

**302.2** Fill Pipe Caps:

**a.** The cap shall have a securely attached, intact gasket.

**b.** The cap and its gasket shall always function properly, latch completely so that it cannot then be easily twisted by hand, and have no structural defects.

**c.** The cap of a gasoline fill pipe shall always be fastened securely on the fill pipe except immediately before, during, and immediately after:

**(1)** "Sticking" the tank to measure gasoline depth.

**(2)** Delivering gasoline into the tank.

**(3)** Doing testing, maintenance or inspection on the gasoline/vapor system.

**d.** Do not unfasten or remove a fill pipe cap unless every other fill pipe is either securely capped or connected to a delivery hose, except as otherwise needed for testing, maintenance, or inspection.

**302.3** Restrictions on Multiple Fill Pipes:

**a.** A tank installed after December 31, 1998 shall not be equipped with more than one fill pipe unless more than one fill pipe is specifically allowed in the Air Pollution

Permit and there is a 2-point system having a properly installed vapor return pipe close to each fill pipe.

**b.** Restriction on Concurrent Delivery: An owner/operator of a dispensing tank fitted with more than 1 fill pipe shall prevent concurrent delivery of gasoline by a gasoline delivery vessel to more than 1 fill pipe of the tank by locking additional fill pipes shut or by using other permanent means, unless:

**(1)** Concurrent delivery is specifically allowed in the facility's Air Pollution Permit; and

**(2)** All fill pipes in use are part of a 2-point vapor recovery system; and

**(3)** Before making a concurrent delivery through a tank's second fill pipe, an additional vapor return hose from the delivery vessel must first be attached to the vapor return line associated with the second fill pipe.

**302.4** Fill Pipe Obstructions:

**a.** Any type of screen and/or other obstructions in fill pipe assemblies shall be permanently removed by November 1, 1999, unless it is specifically allowed by an Air Pollution Permit or is CARB-certified, as referenced in subsection 503.4.

**b.** A screen or other obstruction, allowed by Air Pollution Permit or CARB, shall be temporarily removed by the owner/operator of a dispensing tank prior to inspection by the Control Officer to allow measurements pursuant to this rule.

**302.5** Overfill Protection Equipment: Overfill prevention equipment shall be vapor-tight to the atmosphere. Any device mounted within the fill pipe shall be so designed and maintained that no vapor from the vapor space above the gasoline within the tank can penetrate into the fill pipe or through any of the fill pipe assembly into the atmosphere.

**303 VAPOR RECOVERY SYSTEM:**

**303.1** Gasoline vapors displaced from a dispensing tank by gasoline being delivered shall be handled by a Stage Vapor Recovery System, unless the tank is exempted by Section 305.

**303.2** Stage 1 Vapor-Recovery System Configuration (Reference subsection 503.4 for identification of CARB-certified components):

**a.** Replacement: After June 16, 1999, no part of a vapor recovery system for which there is a CARB specification shall be replaced with anything but CARB-certified components.

**b.** Vapor Valves:

**(1)** All vapor return lines from dispensing tanks shall be equipped with CARB-certified, spring-loaded, vapor-tight, poppetted dry break valves.

**(2)** Vapor valves shall be inspected weekly to determine if closure is complete and gaskets are intact; a record shall be made pursuant to subsection 502.2.

**c.** Above Ground Systems: After June 16, 1999, an above ground dispensing tank shall have CARB-certified fittings wherever CARB so specifies.

**d.** New Systems: Each new gasoline tank installation shall use CARB-certified fittings exclusively wherever CARB so specifies, and:

**(1)** Shall have its own separate, functioning 2-point vapor return line;

**(2)** Is allowed to have a combination vapor recovery system that in addition to having a separate 2-point Stage 1 vapor return line, also has stage 1 vapor piping/fittings linking it to one or more (other) gasoline dispensing tanks.

**e.** New Coaxial Prohibited:

**(1)** No coaxial fill pipes shall be installed after June 16, 1999 in new installations; and

**(2)** No coaxial fill pipes shall be reinstalled after June 16, 1999, in major modifications in which the top of the tank is exposed and the vapor port bung is pre-configured to accept vapor recovery piping.

**304** **EQUIPMENT MAINTENANCE AND USE REQUIRED:** All vapor loss control equipment shall be installed as required, operated as recommended by the manufacturer, and maintained leak-free, vapor-tight and in good working order.

**304.1** Both the owner/operator of a dispensing tank and the driver/operator of a delivery vessel delivering gasoline to the fuel dispensing tank equipped with vapor recovery shall have responsibility to assure that vapor recovery equipment (if required by this rule) is

properly connected and in use at all times while gasoline is actively being dropped/delivered.

**304.2** The owner/operator of a fuel dispensing tank not exempted by Section 305 shall refuse delivery of gasoline from a delivery vessel which does not bear a current pressure test certification decal issued by the Control Officer. This provision does not apply during times when the facility is unattended or there is only one person under control of the dispensing facility present.

**304.3** Coaxial Systems: Both spring-loaded and fixed coaxial fill tubes shall be maintained according to the standards of their manufacturer(s) and be operated so that there is no obstruction of vapor passage from the tank to the delivery vessel.

**305 EXEMPTIONS:**

**305.1** Dispensing Tanks for Farm Operations: Any stationary gasoline dispensing tank used exclusively for the fueling of implements of normal farm operations is exempt from this rule, except for cap, spills, and liquid leak-age provisions in Section 301.

**305.2** The vapor recovery provisions of Section 303 of this rule shall not apply to the following stationary gasoline dispensing tanks:

**a.** Non-Resale Dispensing Operations From Non-Farm Tanks: Any stationary gasoline dispensing operation receiving less than 120,000 gallons of gasoline in any 12 consecutive calendar months, dispensing no resold gasoline, and having each gasoline dispensing tank equipped with a permanent submerged fill pipe pursuant to subsection 302.1, is exempt from Section 303. However, any operation shall become subject to the provisions of Section 303 of this rule by exceeding the 120,000 gallon threshold or not abiding by the restrictions, and shall remain subject to such provisions even if annual emissions later fall below this threshold.

**b.** Dispensing Tanks Of 1000 Gallons Or Less: Any stationary dispensing tank having a capacity of 1000 gallons (3785 l) or less which was installed prior to October 2, 1978, provided that such tank is equipped with a permanent submerged fill pipe. Where, because of government regulation including, but not limited to, Fire Department codes, such a fill pipe cannot be installed, the gasoline shall be delivered into the tank using a nozzle extension that reaches within 6 inches of the tank bottom.

**c.** Dispensing Tanks with Offset Fill Lines: Any stationary dispensing tank installed prior to October 2, 1978, where the fill line between the fill connection and tank is offset.

**SECTION 400 – ADMINISTRATIVE REQUIREMENTS**

**401** **TANKS THAT LOST THEIR EXEMPTION:** Tanks that were formerly exempt from a provision prior to June 16, 1999, shall come into compliance by December 1, 1999.

**402** **BURDEN OF PROOF:**

**402.1** Proving Exempt Status: The burden of proof of eligibility for exemption from a provision of this rule is on the applicant. Persons seeking such an exemption shall maintain adequate records and furnish them to the Control Officer upon request.

**402.2** Providing Proof of Equipment Compliance:

**a.** It is the responsibility of the installer of vapor control equipment, when so required by the Control Officer, to provide proof that a vapor recovery system or its modifications meet the requirements of this Rule 353.

**b.** If the owner/operator or the equipment supplier voluntarily provides such proof, the Control Officer has the option to waive the subsection 402.2a requirement that the installer provide this proof.

**403** **CARB DECERTIFICATION:** A person shall not install or reinstall a component related to vapor recovery that has been decertified by CARB in "Gasoline Facilities - Phase I & II" publication, referenced in subsection 503.4.

**404** **OTHER AGENCIES' REQUIREMENTS:** Compliance with this rule does not relieve or otherwise affect a person's obligation to comply with any other applicable federal, state, or local legal requirement, including, but not limited to, rules promulgated by the Arizona Department of Weights and Measures, local fire department codes, and local zoning ordinances.

**SECTION 500 – MONITORING AND RECORDS:**

**501** **COMPLIANCE INSPECTIONS:** Any dispensing tank required by this rule to be equipped with vapor loss control devices may be subject to monitoring for vapor tightness and leak tightness during any working hours. Such a tank may be opened for gauging or inspection when loading operations are not in progress, provided that such tank is part of an open system or is served by a positive-pressure relief valve with a relief setting not exceeding +1/2 lb psig.

**502** **RECORDKEEPING:** The owner or operator of each gasoline dispensing facility in Maricopa County shall maintain records as follows:

**502.1** The total amount of gasoline received each month shall be recorded by the end of the following month.

**502.2** The owner or operator of a gasoline dispensing facility shall cause weekly records of fill tube, vapor valve and spill containment inspection to be kept. The findings of such weekly inspections shall be permanently entered in a record or log book by the end of Saturday of the following week.

**502.3** These records and any reports or supporting information required by this rule or by the Control Officer shall be retained for at least 5 years.

**502.4** Records of the past 12 months shall be in a readily accessible location and must be made available to the Control Officer without delay upon verbal or written request.

**503** **COMPLIANCE DETERMINATION:** The test methods referenced in Section 504 shall be used in the ways given in the subsections that immediately follow. When more than one test method is permitted for a determination, an exceedance of the limits established in this rule determined by any of the applicable test methods constitutes a violation of this rule. For routine information collection, the Control Officer may accept a manufacturer's data sheet (MSDS), data certified by an officer of the supplying company, or test data for the product of inquiry.

**503.1** Control efficiency of [emission control device] vapor recovery systems and vapor collection/ processing systems shall be determined according to EPA Method 2A and either EPA Method 25A or 25B (Section 504 and subsection 504.1), or by CARB-approved test methods (Section 504 and subsection 504.4). EPA Method 2B shall be used for vapor incineration devices.

**503.2** Vapor pressure of gasoline (reference Section 204) shall be determined using American Society for Testing and Materials (ASTM) Method D323-94 or ASTM Method D4953-93. Method D323-94 shall be used for gasoline either containing no oxygenates or MTBE (methyl tertiary butyl ether) as the sole oxygenate. Method D4953-93 shall be used for oxygenated gasoline.

**503.3** Vapor Leaks:

**a.** If a determination of leak-tight status is to be made on Stage 1 or spill containment equipment at a gasoline dispensing facility or on a delivery vessel at the station, the method in subsection 504.3 shall be used.

**b.** Subsection 504.3 probe distance and movement parameters not with-standing, if it has been established that there are no other interfering vapor escapes, it is an exceedance if a reading by the Control Officer from an established vapor escape above 1/5 LEL (or 10,000 ppm as methane) is sustained for at least 5 seconds, and the probe is either consistently further than 1 inch from the source and/or the probe is consistently being moved faster than 4 cm per second.

**c.** The Control Officer may count it as a failure to perform weekly inspections pursuant to subsection 301.3 if foreign material is found in a spill containment receptacle and there is no record of an inspection's being performed in the preceding 10 days.

**503.4** The CARB publication, "Gasoline Facilities - Phase I & II", pursuant to sections 41954 through 41962 of the California Health and Safety Code, is adopted by reference, as it exists on June 16, 1999. This publication is available for reference at the Maricopa County Air Quality ~~Division~~ Department, 1001 ~~North~~ N. Central ~~Avenue~~ Ave., ~~Suite 200~~, Phoenix, AZ, 85004~~-1942, (602) 506-6010~~. This publication is available for purchase at the (California) Air Resources Board, PO Box 2815, 2020 L Street, Sacramento, CA, 95812-2815; (916) 323-0255 or (916) 322-2886.

**504** **TEST METHODS:** The EPA test methods as they exist in the Code of Federal Regulations (CFR) (July 1, 1998), as listed below, are adopted by reference. The CARB test methods as they exist in Stationary Source Test Methods, Volume 2, on April 8, 1999, as listed in subsection 504.4 are adopted by reference. The other test methods listed here are also adopted by reference, each having paired with it a specific date that identifies the particular version/revision of the method that is adopted by reference. These adoptions by reference include no future editions or amendments. Copies of test methods referenced in this Section 504 are available at the Maricopa County ~~Environmental Services~~ Air Quality Department, 1001 ~~North~~ N. Central ~~Avenue~~ Ave., Phoenix, AZ, 85004~~-1942~~.

**504.1** EPA Test Methods:

**a.** EPA Methods 2a ("Direct Measurement of Gas Volume Through Pipes and Small Ducts"), and 2b ("Determination of Exhaust-Gas Volume Flow-Rate From Gasoline Vapor Incinerators"). Both of the foregoing methods are in 40 CFR 60, Appendix A.

**b.** EPA Method 25 ("Determination of Total Gaseous Nonmethane Organic Emissions as Carbon") and its submethods (40 CFR 60, Appendix A).

**504.2** Gasoline Vapor Pressure:

**a.** American Society for Testing and Materials (ASTM) Method D323-94 (1994) "Standard Test Method for Vapor Pressure of Petroleum Products (Reid Method).

**b.** American Society for Testing and Materials (ASTM) Method D4953-93 (1993) "Standard Test Method for Vapor Pressure of Gasoline and Gasoline-Oxygenate Blends (Dry Method)

**504.3** Leak Detection Test Method:

**a.** Calibration: Within four hours prior to monitoring, the CGD or OVA shall be suitably calibrated in a manner and with the gas specified by the manufacturer for 20 percent LEL response, or calibrated with methane for a 10,000 ppm response.

**b.** Probe Distance: The probe inlet shall be one inch (2.5 cm) or less from the potential leak source when searching for leaks. The probe inlet shall be one inch (2.5 cm) from the leak source when the highest detector reading is being determined for a discovered leak. When the probe is obstructed from moving within one inch (2.5 cm) of an actual or potential leak source, the closest practicable probe distance greater than 1 inch shall be used.

**c.** Probe Movement: The probe shall be moved slowly, not faster than 1.6 inches per second (4 centimeters per second). If there is any meter deflection at a potential or actual leak source, the probe shall be positioned to locate the point of highest meter response.

**d.** Probe Position: The probe inlet shall be positioned in the path of the vapor flow from a leak, such that the central axis of the probe-tube inlet shall be positioned coaxially with the path of the most concentrated vapors.

**e.** Data Recording: The highest detector reading and location for each incidence of detected leakage shall be recorded, along with the date and time. If no gasoline vapor is detected, that fact shall be entered into the record.

**504.4** CARB Certification and Test Procedures for Gasoline Vapor Recovery Systems:

**a.** CARB Test Method CP-201, "Certification Procedure for Vapor Recovery Systems of Dispensing Facilities".

**b.** CARB Test Procedure TP-201.1 - "Determination of Efficiency of Phase I Vapor Recovery Systems of Dispensing Facilities without Assist Processors".

**c.** CARB Test Procedure TP-201.1A - "Determination of Efficiency of Phase I Vapor Recovery Systems of Dispensing Facilities with Assist Processors".

## REGULATION III – CONTROL OF AIR CONTAMINANTS

## RULE 358
## POLYSTYRENE FOAM OPERATIONS

### INDEX


**SECTION 100 – GENERAL**

101 PURPOSE
102 APPLICABILITY

**SECTION 200 – DEFINITIONS**

201 BEAD-LOT AND BEAD-LOT IDENTIFIER
202 BLOCK (EPS FOAM BLOCK)
203 BLOWING AGENT
204 CUP MOLDING
205 DAY
206 EMISSION CONTROL SYSTEM (ECS)
207 EPS BEADS (EXPANDABLE POLYSTYRENE BEADS)
208 EPS FOAM (EXPANDED POLYSTYRENE FOAM)
209 LOOSE FILL
~~210 NONPRECURSOR ORGANIC COMPOUND~~
~~211~~ 210 POLYSTYRENE
~~212~~ 211 PREPUFF OR PUFF
~~213~~ 212 SHAPE
~~214~~ 213 SPECIALTY BLOCK PRODUCTS
~~215 VOLATILE ORGANIC COMPOUND (VOC)~~
~~216~~ 214 VOC CONTENT OF RAW EPS

**SECTION 300 – STANDARDS**

301 BLOCK MAKERS

302 SHAPE MAKERS
303 CUP MAKERS
304 LOOSE FILL MAKERS
305 PERFORMANCE OF ECS CONTROLLING VOC EMISSIONS
306 AIR POLLUTION CONTROL EQUIPMENT AND APPROVED EMISSIONS CONTROL SYSTEM
307 VOC CONTAINMENT, IDENTIFICATION, AND DISPOSAL
308 EXEMPTION

**SECTION 400 – ADMINISTRATIVE REQUIREMENTS (NOT APPLICABLE)**

**SECTION 500 – MONITORING AND RECORDS**
501 RECORDS
502 RECORDKEEPING SPECIFICS
503 TEST PROCEDURES
504 TEST METHODS ADOPTED BY REFERENCE

**Adopted 04/20/05**
**Revised 07/25/12**
**Revised 09/25/13**

**MARICOPA COUNTY**
**AIR POLLUTION CONTROL REGULATIONS**
**REGULATION III – CONTROL OF AIR CONTAMINANTS**

**RULE 358**
**POLYSTYRENE FOAM OPERATIONS**

**SECTION 100 – GENERAL**

**101** **PURPOSE:** The purpose of this rule is to limit the emissions of volatile organic compounds (VOCs) from the manufacturing of expanded-polystyrene products.

**102** **APPLICABILITY:** This rule applies to any facility that expands, ages, or molds expandable polystyrene (EPS).

**SECTION 200 – DEFINITIONS:** For the purpose of this rule, the following definitions apply, in addition to those definitions found in Rule 100 (General Provisions and Definitions) of these rules. In the event of any inconsistency between any of the Maricopa County air pollution control rules, the definitions in this rule take precedence.

**201** **BEAD-LOT AND BEAD-LOT IDENTIFIER –** A specific selection of a specific quantity of expandable polystyrene material, all portions of which typically share similar properties. This selected material has been tested in accordance with standard quality-control procedures and is traceable to the time and date on which it was packaged. Traceability is enabled by a bead lot identifier or lot number, which is a unique numeric (or alphanumeric) string that is permanently coupled with the selected material. The lot number always appears on one or more formal transfer/receipt documents retained by both the seller and the buyer and identifies the material's plant of manufacture, as well as the date that it was packaged.

**202** **BLOCK (EPS FOAM BLOCK) –** A block-shaped solid made of EPS foam that was molded as a unit. Typically, a block's depth and width each exceed 23 inches (0.6 m) and a length exceeding 95 inches (2.4 m).

**203** **BLOWING AGENT –** Any substance that, alone or in conjunction with other substances, is capable of producing a cellular (foam) structure in a polymeric material by inflation.

**204** **CUP MOLDING –** The process of making cups, bowls, and similar containers by molding expanded polystyrene globules (prepuff).

**205** **DAY –** Any 24-hour period beginning at 12:00 am–midnight.

**206** **EMISSION CONTROL SYSTEM (ECS) –** A system for reducing emissions of volatile organic compounds, consisting of a capture system (e.g., enclosures, hoods, and ductwork) and control device(s). An ECS may also include gas conditioning equipment such as condensers or prefilters.

**207** **EPS BEADS (EXPANDABLE POLYSTYRENE BEADS) –** Polystyrene beads, particles, or granules, usually less than one-twelfth inch in diameter, that are formulated with a blowing agent (typically 3.5% to 7% of bead weight). When subjected to prescribed heating in an expansion system, the beads puff up, expanding many times their original volume into low density foam globules (called "prepuff" or "puff") from which a variety of EPS foam products are molded.

**208** **EPS FOAM (EXPANDED POLYSTYRENE FOAM) –** A lightweight, naturally white, foam material, made of polystyrene, from which a variety of common items are made, such as ice-chests, insulation board, protective packaging, and single-use cups.

**209** **LOOSE FILL –** Small, expanded polystyrene forms produced in a variety of shapes that are used as packing material or as stuffing in furnishings. These foam products typically have a density less than 0.6 pounds per cubic foot (pcf).

~~210~~ ~~**NONPRECURSOR ORGANIC COMPOUND** – Any of the organic compounds that have been designated by the EPA as "exempt" (having negligible photochemical reactivity). A listing of the compounds is found in Rule 100 of these rules and regulations.~~

~~211~~210 **POLYSTYRENE –** Any grade, class, or type of thermoplastic polymer, alloy, or blend that is composed of at least 80% polymerized styrene by weight.

~~212~~211 **PREPUFF OR PUFF –** Expanded polystyrene globules, prior to molding, formed from EPS beads/granules that have been processed in an expander. No grind/regrind material (i.e., expanded EPS that has been through a grinder) or material within a grinding system is considered to be prepuff.

~~213~~212 **SHAPE –** An object made out of EPS that has been molded into a shape other than that of a block, cup, or bowl.

~~214~~213 **SPECIALTY BLOCK PRODUCTS –** For the purposes of this rule, a specialty block product is an EPS block or block-derivative (e.g., board, architectural form, etc.) that meets either of the following criteria:

~~214.1~~213.1 Has a density of 2.0 pounds per cubic foot or greater, as determined by ASTM Method C303; or

~~214.2~~213.2 Has a density less than 0.8 pounds per cubic foot, as determined by ASTM Method C303.

~~215~~ ~~**VOLATILE ORGANIC COMPOUND (VOC)** – Any organic compound that participates in photochemical reactions, except nonprecursor organic compounds.~~

~~216~~214 **VOC CONTENT OF RAW EPS –** For the purposes of this rule, there are 3 different expressions for stating the VOC content of raw EPS beads/granules. Each of these expressions must be made in terms of either the number of pounds of VOC per 100 pounds of beads or the percentage of overall weight (including the VOC weight) that the incorporated VOC constitutes. The percent value shall be expressed with a precision of no less than the nearest tenth of one percent, which is equivalent to expressing the same number value in pounds VOC per 100 lbs. beads, to the nearest tenth of a pound. The acceptable expressions are:

~~216.1~~214.1 **Manufacturer Certified Bead Lot (MCBL) VOC Content:** A document such as a standard Certificate of Analysis that numerically presents an EPS bead-lot's VOC content and must contain all of the following elements:

**a.** The VOC content printed or written on a paper document by the bead manufacturer, after the manufacturer has had the bead-lot tested to determine the lot's percent VOC, before shipping from the manufacturer; and

**b.** The manufacturer's name and the bead-lot, identified on the paper document with the appropriate bead-lot identifier; and

**c.** The signature of an officer of the manufacturing facility or the signature of an officer's designee, previously designated in writing by such an officer.

**~~216.2~~214.2 Post-Manufacture Laboratory-Tested (PMLT) VOC Content:** The results of a laboratory test determining the VOC content of a representative sampling of an intermediate or finished expanded polystyrene product, or such a test of raw beads any time after their MCBL VOC content has been assigned.

**~~216.3~~214.3 ISO-Certified Maximum Bead-Model (IMBM) VOC Content:** A numerical value that represents the upper limit of a particular bead model's VOC content, which has been:

**a.** Initially stipulated by the bead-model's manufacturer in a document that gives the bead-model's unique identifier, and

**b.** Subsequently certified for accuracy by the International Standards Organization (ISO).

**SECTION 300 – STANDARDS:**

**301 BLOCK MAKERS:** An owner and/or operator of an EPS block-making facility shall comply with Section 301.1 and, if applicable, Section 301.2 of this rule.

**301.1** Limit the sum of both the VOC that escaped to atmosphere and the residual VOC in the resulting blocks at the time they are released from the molding machine to not more than 3.0 pounds for every 100 pounds of raw beads processed.

**301.2** Specialty Products Alternative Operating Scenario: When producing specialty block-products solely from raw EPS beads that exceed a VOC content of 5.5 percent by weight, an owner and/or operator may choose the standard in Section 301.2(a) by which to comply with this rule, but only if the requirements in Sections 301.2(b) and 301.2(c) are met.

**a.** Limit the sum of both the VOC that escaped to atmosphere and the residual VOC in the resulting blocks at the time they are released from the molding machine to not

more than 3.9 pounds for every 100pounds of raw beads processed (3.9 lb/100 lbs), and

**b.** Taking into account the total weight of all beads processed every 12months; limit the portion of that weight that is processed under the 3.9 lb/100 lb standard to 5 percent allowed per a 12-month rolling total.

**c.** The proportion of annual raw-material throughput that is produced under the Section 301.2(a) standard shall be calculated and recorded according to Section 502.1(d).

**302** **SHAPE MAKERS:** An owner and/or operator of an EPS shape-making facility shall limit the sum of the VOC that escaped to atmosphere and the residual VOC in the resulting shapes to 2.7 pounds for every 100 pounds of raw beads processed.

**303** **CUP MAKERS:** An owner and/or operator of an EPS cup-making facility shall limit the sum of the VOC that escaped to atmosphere and the residual VOC in the resulting cups to 3.2 pounds for every 100 pounds of raw beads processed.

**304** **LOOSE FILL MAKERS:** An owner and/or operator of a facility that makes expanded polystyrene loose fill shall limit the sum of both the VOC that escaped to atmosphere plus the residual VOC in the finished loose fill (measured right after the final curing process) to not more than 2.4 pounds for every 100 pounds of raw EPS materials processed into finished loose fill.

**305** **PERFORMANCE OF ECS CONTROLLING VOC EMISSIONS:** If an ECS is required by this rule, comply with Sections 305.1, 305.2, and 305.3 of this rule.

**305.1** The control device (abatement subsystem) of such ECS shall comply with either Section 305.1(a) or Section 305.1(b) of this rule.

**a.** Reduce the weight of VOC-as-carbon that enters the control device by at least 94%; or

**b.** Maintain an hourly average outlet concentration of VOC below 20 milligrams per dry standard cubic meter. Express mass loading of VOC as milligrams of non-methane organic carbon.

**305.2** Each ECS that is operated in order to comply with this rule shall be equipped with monitoring devices capable of demonstrating that the ECS is operating in a manner that assures compliance with this rule.

**305.3** Records shall be kept according to Section 502.3 of this rule.

**306 AIR POLLUTION CONTROL EQUIPMENT AND APPROVED EMISSION CONTROL SYSTEM (ECS):** An owner, operator, or person subject to this rule must provide, properly install and maintain in calibration, in good working order, and in operation air pollution control equipment required by this rule.

**306.1 OPERATION AND MAINTENANCE (O&M) PLAN REQUIREMENTS FOR AN ECS:**

**a.** An owner, operator, or person subject to this rule must submit to the Control Officer for review every O&M Plan(s) for any ECS including any ECS monitoring device that is used under this rule or required under an air pollution control permit.

**b.** An owner, operator, or person subject to this rule must provide and maintain readily available on-site at all times (an) O&M Plan(s) for any ECS and any ECS monitoring devices that are used under this rule or an air pollution control permit.

**c.** An owner, operator, or person subject to this rule operating an ECS must install, maintain, and accurately calibrate monitoring devices described in the O&M Plan(s) including, but not limited to, monitoring devices that measure pressure differentials and other operating conditions necessary to determine if control devices are functioning properly.

**d.** An owner, operator, or person, who is required to have an O&M Plan for any ECS including any ECS monitoring devices must fully comply with all elements of an O&M Plan(s) including, but not limited to, every action, schedule, and condition identified in each O&M Plan.

**e.** An O&M Plan for any ECS including any ECS monitoring devices must include all of the following information:

**(1)** ECS equipment manufacturer,

**(2)** ECS equipment model,

**(3)** ECS equipment identification number or identifier that owner, operator, or person subject to this rule assigns to such ECS equipment when manufacturer's equipment identification number is unknown,

**(4)** Information required by Section 502.3 of this rule,

**(5)** Procedures for collecting and recording required data and other information in a form approved by the Control Officer, which shall include data collected through the O&M Plan and through the monitoring of key system operating parameters; and,

**(6)** Procedures and schedules for preventive and corrective maintenance performed for the purpose of maintaining the ECS proper operating condition.

**f.** The owner, operator, or person subject to this rule, who receives a written notice from the Control Officer that the O&M Plan is deficient or inadequate, must make written revisions to the O&M Plan for any ECS including any ECS monitoring devices and must submit such revised O&M Plan to the Control Officer within five working days of receipt of the Control Officer's written notice, unless such time period is extended by the Control Officer, upon written request, for good cause. During the time that such owner, operator, or person subject to this rule is preparing revisions to the O&M Plan, such owner, operator, or person must still comply with all requirements of this rule.

## 307 VOC CONTAINMENT, IDENTIFICATION, AND DISPOSAL:

### 307.1 Containment of VOC-Emitting Material:

**a.** When they are not in use, store all fresh and used non-EPS VOC containing material in closed, leak-free containers that are labeled according to Section 307.4. Such materials include but are not limited to cleaning solvents, inks, coatings, thinners, and their residues including residues on rags; and

**b.** Store raw EPS beads in closed, leak-free, labeled containers when not in use.

**307.2** Materials addressed in Section 307.1 of this rule may be placed in an enclosure ducted solely to an ECS that is approved by the Control Officer, instead of in closed containers.

**307.3** The owner and/or operator must implement procedures to minimize spills of VOC-containing materials described in Section 307.1(a) of this rule, during their handling and transfer to or from containers, vats, enclosed systems, waste receptacles, and other equipment, whether the material is fresh, used, or waste.

### 307.4 Identification and Labeling:

**a.** Containers used for initial, intermediate, or final storage of VOC containing materials addressed in Section 307.1 of this rule shall be clearly labeled with their contents.

**b.** Content-labeling done according to the requirements of federal hazardous waste (RCRA) or occupational safety (OSHA) statutes and codes meets the requirements in Section 307.4(a) of this rule.

**308 EXEMPTION:**

**308.1 Exemption From Section 301.1 Through Section 306.1:** An owner and/or operator of a facility is exempt from the requirements of Section 301.1 through Section 306.1 of this rule, if the total VOC content of all raw EPS material processed by the facility is, in each calendar year, below 50 tons (100,000 lbs) and, in each calendar month, below 12,000 pounds.

**308.2 Burden of Proof:** A person claiming any exemption from this rule or from a provision of this rule shall provide adequate records to verify and maintain any exemption. These may include records of raw material used, laboratory analyses, technical data sheets, and/or performance test results.

**SECTION 400 – ADMINISTRATIVE REQUIREMENTS (NOT APPLICABLE)**

**SECTION 500 – MONITORING AND RECORDS**

**501 RECORDS:**

**501.1 General:** Records shall be kept complete, up-to-date, and in a consistent and legible format.

**501.2 Retention:** Records required by this rule shall be retained for at least 5 years.

**501.3 Use of Other Records:** Records that are kept by an EPS facility for other agencies or purposes may be submitted to the Control Officer to meet the record requirements of this rule, provided such records contain the necessary information according to Section 502 of this rule.

**502 RECORDKEEPING SPECIFICS:**

**502.1 Tracking EPS Beads:** A person subject to this rule shall comply with the following requirements, as applicable.

**a.** **Lot ID and VOC Content:** Prior to expanding any part of a bead-lot, an owner and/or operator shall obtain and retain an original or copy of the VOC-content, as defined in Section 216 of this rule, for each separate lot-number/identifier of beads received.

**b.** **Total Expanded by Lot and Date:** Each day that raw EPS material is expanded in a facility's expander, an owner and/or operator shall record the amount of each bead-lot expanded and its corresponding lot number/identifier.

**c.** **Block Makers:** Each day that blocks are made, record the approximate weight of each newly molded block, measured to the nearest 2 pounds.

**d.** **Specialty Products subject to Section 301.2(a):** An EPS-block facility owner and/or operator making specialty products under Section 301.2(a) of this rule shall:

**(1)** Maintain a log indicating when the facility is operating under the specialty-products alternative operating scenario; and

**(2)** Each month calculate the percent of total EPS raw material used during the previous 12 months that specialty products, made under Section 301.2(a) of this rule, constitute; enter the calculations and results in the log.

**502.2** **Lists of Non-EPS VOC-Containing Materials:** Non-EPS materials may include, but are not limited to, the following categories: inks, coatings, adhesives, reducers, thinners, solvents, cleaning materials, additives, spray-cans, sprayed lubricants, and any other VOC-containing materials that are not EPS.

**a.** An owner and/or operator shall maintain a current list of non-EPS materials, containing VOC, used at the facility. A complete and ordered assemblage of the required data meets the requirements for a list.

**b.** An owner and/or operator shall express VOC content of non-EPS material in one of the following three forms:

**(1)** Pounds VOC per gallon (or grams VOC per liter), or

**(2)** Fractional pounds of VOC per lb. material (or grams per kilogram), or

**(3)** The percent VOC by weight along with the specific gravity or density (two numbers are required for each entry).

**c.** By the end of the following month, an owner and/or operator shall record the amount and type of each non-EPS material, containing VOC that was used during each month.

**502.3** **Records of ECS Operation and Monitoring:** On a daily basis, the owner and/or operator of a facility that operates an ECS to comply with this rule shall record key system operating parameters documented in the O&M plan, such as temperature, flow rate, pressure, and/or VOC-concentration, etc.

**503** **TEST PROCEDURES:** An owner and/or operator of an EPS facility will be in violation of this rule if the VOC emissions, measured by any of the referenced test methods specified in Section 503 of this rule and listed in Section 504 of this rule, do not comply with the applicable standards included in Section 301 through Section 305 of this rule.

**503.1** An owner and/or operator shall conduct a performance test on each ECS used to meet a standard in this rule at least once every five years.

**503.2** Performance tests shall be conducted between June 1 and August 31.

**503.3** An owner and/or operator shall conduct performance tests using the test methods designated by Section 503.4 through Section 503.9 of this rule and incorporated by reference in Section 504 of this rule.

**503.4** An owner and/or operator shall perform the measurement of airflow and gas flow into and out of the ECS by performing EPA Method 2, referenced in Section 504.1 of this rule.

**503.5** An owner and/or operator shall determine the concentration of methane and ethane emissions by performing EPA Method 18, referenced in Section 504.1 of this rule or Method 25 (and its submethods) referenced in Section 504.1 of this rule.

**503.6** An owner and/or operator shall determine the control efficiency of the VOC control device (abatement subsystem) of an ECS by performing EPA Method 25 (and its submethods), referenced in Section 504.1 of this rule.

**503.7** An owner and/or operator shall determine the efficiency of a capture system according to both EPA Method 204 (and its submethods) referenced in Section 504.2 of this rule and the EPA guidance document referenced in Section 504.3 of this rule.

**503.8** An owner and/or operator shall determine the concentration of total volatile organic carbon content in polymeric materials by performing Bay Area Air Quality Management District (BAAQMD) Method 45 as referenced in Section 504.5 of this rule or by performing South Coast Air Quality Management District (SCAQMD) Method 306-91, 1993 revision, as referenced in Section 504.6 of this rule.

**503.9** **Determination of ECS Effectiveness:** ECS effectiveness shall be determined from the results of a testing protocol based on mass balance, calculated according to the following formulas:

$$\%\,Capture = \frac{VOC_{ECS}}{VOC_I - VOC_P} \times 100$$

$$\%\,Control = \frac{VOC_{ECS} - VOC_{St}}{VOC_{ECS}} \times 100$$

$$\%\,Emitted = \frac{VOC_I + VOC_{St} - VOC_P - VOC_{ECS}}{VOC_I - VOC_P} \times 100$$

$$\%\,Overall\ (Capture + Control) = \frac{VOC_{ECS}}{VOC_I - VOC_P} \times \frac{VOC_{ECS} - VOC_{St}}{VOC_{ECS}} \times 100$$

Where:

$VOC_I$ = the VOC input in the form of the VOC content of a weighed mass of raw beads.

$VOC_P$ = the VOC content of the products made from the weighed raw beads.

$VOC_{ECS}$ = the VOC measured in the air entering the ECS.

$VOC_{St}$ = the VOC remaining in the gas stream(s) emerging from the ECS during production.

**503.10** **Determination of Product Density:** The ASTM Method C303-10referenced in Section 504.4 of this rule shall be used to determine the density of EPS foam blocks and block-derivatives.

**503.11** **Conforming Testing to Desired Production Characteristics:** The owner and/or operator of an EPS facility must, through performance testing, demonstrate compliance with each alternative operating scenario chosen.

**504** **COMPLIANCE DETERMINATION – TEST METHODS:** An exceedance of the limits established in this rule determined by any of the applicable test methods constitutes a violation of this rule. The EPA test methods, ASTM International (ASTM) standards and other documents as they exist in the Code of Federal Regulations (CFR) as listed below, are adopted and incorporated by reference in Appendix G of the Maricopa County Air Pollution Control Regulations. These documents are available at the Maricopa County Air Quality Department, 1001 N. Central ~~Avenue~~

Ave., Phoenix, AZ 85004~~; or by calling (602) 506-0169 for information~~. ASTM standards are also available from ASTM International, 100 Barr Harbor Drive, P.O. Box C700, West Conshohocken, PA 19428, or from its website at www.astm.org. Bay Area Air Quality Management District test methods are available from Bay Area Air Quality Management District, 939 Ellis Street, San Francisco, CA 94109, or from its website at www.baaqmd.gov. South Coast Air Quality Management test methods are available from South Coast Air Quality Management, 21865 Copley Drive, Diamond Bar, CA 91765, or from its website at www.aqmd.gov.

**504.1 EPA Test Methods as incorporated by reference in 40 CFR 60, Appendix A-7:**

**a.** Method 2 – Determination of Stack Gas Velocity and Volumetric Flow Rate (Type S Pitot Tube).

**b**. Method 2A – Direct Measurement of Gas Volume through Pipes and Small Ducts.

**c.** Method 2C – Determination of Gas Velocity and Volumetric Flow Rate in Small Stacks or Ducts (Standard Pitot Tube).

**d**. Method 2D – Measurement of Gas Volume Flow Rates in Small Pipes and Ducts.

**e.** Method 18 – Measurement of Gaseous Organic Compound Emissions by Gas Chromatography.

**f.** Method 25 – Determination of Total Gaseous Nonmethane Organic Emissions as Carbon.

**g.** Method 25A – Determination of Total Gaseous Nonmethane Organic Concentration Using a Flame Ionization Analyzer.

**504.2 EPA Test Methods as incorporated by reference in 40 CFR 51, Appendix M:**

**a.** Method 204 – Criteria for and Verification of a Permanent or Temporary Total Enclosure.

**b.** Method 204a – Volatile Organic Compounds Content In Liquid Input Stream.

**c.** Method 204b – Volatile Organic Compounds Emissions In Captured Stream.

**d.** Method 204c – Volatile Organic Compounds Emissions In Captured Stream (Dilution Technique).

**e.** Method 204d – Volatile Organic Compounds Emissions In Uncaptured Stream From Temporary Total Enclosure.

**f.** Method 204e – Volatile Organic Compounds Emissions In Uncaptured Stream From Building Enclosure.

**g.** Method 204f – Volatile Organic Compounds Content In Liquid Input Stream (Distillation Approach).

**504.3** EPA Guidance document *Guidelines for Determining Capture Efficiency,* January 9, 1995.

**504.4** ASTM C303 – 10 Standard Test Method for Dimensions and Density of Preformed Block and Board-Type Thermal Insulation.

**504.5** Bay Area Air Quality Management District Method 45 *Determination of Butanes and Pentanes in Polymeric Materials,* as amended May 18, 2005.

**504.6** South Coast Air Quality Management District Method 306-91 *Analysis of Pentanes in Expandable Styrene Polymers,* as revised February 1993.

**Adopted 03/15/06**
**Revised 12/17/08**
**Revised 09/16/09**
**Revised 07/07/10**
**Revised 08/17/11**
**Revised 07/25/12**
**Revised 09/25/13**

**MARICOPA COUNTY**
**AIR POLLUTION CONTROL REGULATIONS**

**APPENDIX G**
**Incorporated Materials**

**1.** The following test methods, protocols, federal interpretations, guidelines, and appendices located in Title 40, Code of Federal Regulations (CFR) are approved for use as directed by the department under the Maricopa County Air Pollution Control Regulations. These standards are incorporated by reference as of July 1, 2011, and no future editions or amendments.

**a.** 40 CFR 50;

**b.** 40 CFR 50, Appendices A-1, A-2, B, C, D, E, F, G, H, I, J, K, L, M, N, O, P, Q, R, S, and T;

**c.** 40 CFR 51; Appendix M; Appendix S, Section IV; and Appendix W;

**d.** 40 CFR 52, Appendices D and E;

**e.** 40 CFR 53;

**f.** 40 CFR 58;

**g.** 40 CFR 58, Appendices A, C, D, E, and G;

**h.** 40 CFR 60, Appendices A-1, A-2, A-3, A-4, A-5, A-6, A-7, A-8, B, C, D, F, G, and I;

**i.** 40 CFR 61, Appendices A, B, C, D, and E;

**j.** 40 CFR 63, all appendices; and

**k.** 40 CFR 75, Appendices A, B, C, D, E, F, and G.

**2.** The following are federally listed non-precursor organic compounds, organic compounds which have been determined to have negligible photochemical reactivity as listed in 40 CFR 51.100(s).

**a.** This list is incorporated by reference as of July 1, 2013, and no future editions or amendments:

methane;
ethane;
methylene chloride (dichloromethane);
1,1,1-trichloroethane (methyl chloroform);
1,1,2-trichloro-1,2,2-trifluoroethane (CFC-113);
trichlorofluoromethane (CFC-11);
dichlorodifluoromethane (CFC-12);
chlorodifluoromethane (HCFC-22);
trifluoromethane (HFC-23);
1,2-dichloro 1,1,2,2-tetrafluoroethane (CFC-114);
chloropentafluoroethane (CFC-115);
1,1,1-trifluoro 2,2-dichloroethane (HCFC-123);
1,1,1,2-tetrafluoroethane (HFC-134a);
1,1-dichloro 1-fluoroethane (HCFC-141b);
1-chloro 1,1-difluoroethane (HCFC-142b);

2-chloro-1,1,1,2-tetrafluoroethane (HCFC-124);

pentafluoroethane (HFC-125);

1,1,2,2-tetrafluoroethane (HFC-134);

1,1,1-trifluoroethane (HFC-143a);

1,1-difluoroethane (HFC-152a);

parachlorobenzotrifluoride (PCBTF);

cyclic, branched, or linear completely methylated siloxanes;

acetone;

perchloroethylene (tetrachloroethylene);

3,3-dichloro-1,1,1,2,2-pentafluoropropane (HCFC-225ca);

1,3-dichloro-1,1,2,2,3-pentafluoropropane (HCFC-225cb);

1,1,1,2,3,4,4,5,5,5-decafluoropentane (HFC 43-10mee);

difluoromethane (HFC-32); ethylfluoride (HFC-161);

1,1,1,3,3,3-hexafluoropropane (HFC-236fa);

1,1,2,2,3-pentafluoropropane (HFC-245ca);

1,1,2,3,3-pentafluoropropane (HFC-245ea);

1,1,1,2,3-pentafluoropropane (HFC-245eb);

1,1,1,3,3-pentafluoropropane (HFC-245fa);

1,1,1,2,3,3-hexafluoropropane (HFC-236ea);

1,1,1,3,3-pentafluorobutane (HFC-365mfc);

chlorofluoromethane (HCFC-31);

1 chloro-1-fluoroethane (HCFC-151a);

1,2-dichloro-1,1,2-trifluoroethane (HCFC-123a);

1,1,1,2,2,3,3,4,4-nonafluoro-4-methoxy-butane ($C_4F_9OCH_3$ or HFE-7100);

2-(difluoromethoxymethyl)-1,1,1,2,3,3,3-heptafluoropropane ($(CF_3)_2CFCF_2OCH_3$);

1-ethoxy-1,1,2,2,3,3,4,4,4-nonafluorobutane ($C_4F_9OC_2H_5$ or HFE-7200);

2-(ethoxydifluoromethyl)-1,1,1,2,3,3,3-heptafluoropropane ($(CF_3)_2CFCF_2OC_2H_5$);

methyl acetate;

1,1,1,2,2,3,3-heptafluoro-3-methoxy-propane (n-C3F7OCH3, HFE-7000);

3-ethoxy- 1,1,1,2,3,4,4,5,5,6,6,6-dodecafluoro-2-(trifluoromethyl) hexane (HFE-7500);

1,1,1,2,3,3,3-heptafluoropropane (HFC 227ea); methyl formate (HCOOCH3);

1,1,1,2,2,3,4,5,5,5-decafluoro-3-methoxy-4-trifluoromethyl-pentane (HFE-7300);

propylene carbonate;

dimethyl carbonate;

*trans* -1,3,3,3-tetrafluoropropene;

$HCF_2OCF_2H$ (HFE-134);

$HCF_2OCF_2OCF_2H$ (HFE-236cal2);

$HCF_2OCF_2CF_2OCF_2H$ (HFE-338pcc13);

$HCF_2OCF_2OCF_2CF_2OCF_2H$ (H-Galden 1040x or H-Galden ZT 130 (or 150 or 180)); and

perfluorocarbon compounds which fall into these classes:

(i) Cyclic, branched, or linear, completely fluorinated alkanes;

(ii) Cyclic, branched, or linear, completely fluorinated ethers with no unsaturations;

(iii) Cyclic, branched, or linear, completely fluorinated tertiary amines with no unsaturations; and

(iv) Sulfur containing perfluorocarbons with no unsaturations and with sulfur bonds only to carbon and fluorine.

**b.** The following compound(s) are VOC for purposes of all recordkeeping, emissions reporting, photochemical dispersion modeling, and inventory requirements, which apply to VOC and shall be uniquely identified in emission reports but are not VOC for purposes of VOC emissions limitations or VOC content requirements: t-butyl acetate (540-88-5).

**~~2~~3.** The following documents are incorporated by reference and are approved for use as directed by the department under the Maricopa County Air Pollution Control Regulations. These documents are incorporated by reference as of the year specified below, and no future editions or amendments.

a. The Arizona Department of Environmental Quality's (ADEQ) “Arizona Testing Manual for Air Pollutant Emissions,” amended as of March 1992, and no future editions or amendments.

b. All ASTM International (ASTM) standards referenced in the Maricopa County Air Pollution Control Regulations as of the year specified in the reference, and no future editions or amendments.

c. The U.S. Government Printing Office's “Standard Industrial Classification Manual, 1987”, published by the Executive Office of the President, Office of Management and Budget, and no future editions or amendments.

d. EPA Publication No. AP-42, 1995, “Compilation of Air Pollutant Emission Factors,” Volume I: Stationary Point and Area Sources, Fifth Edition, including Supplements A, B, C, D, E, F, Updates 2001, 2002, 2003, and 2004 and all updates as of July 1, 2010, and no future editions or amendments.

e. EPA guidance document “Guidelines for Determining Capture Efficiency”, January 9, 1995, and no future editions or amendments.

f. 2002 US NAICS Manual, “North American Industry Classification System United States”, National Technical Information Service, US Census Bureau, 2002, and no future editions or amendments.

**~~3~~4.** The following federal regulations located in Title 40, Code of Federal Regulations (CFR) are approved for use as directed by the department under the Maricopa County Air Pollution Control Regulations. These standards are incorporated by reference as of July 1, 2010, and no future editions or amendments.

a. The Consolidated Emissions Reporting Rule in 40 CFR 51, Subpart A, Appendix A, Table 2A.

b. 40 CFR 75.

**Availability of Information:** Copies of these incorporated materials are available electronically at: ecfr.gpoaccess.gov; at the Maricopa County Air Quality Department, 1001 N. Central Ave, Phoenix, AZ, 85004~~; or by calling (602) 506-0169 for information~~. ASTM standards are available from ASTM International, 100 Barr Harbor Drive, P.O. Box C700, West Conshohocken, PA 19428, or from its website at www.astm.org.